halstead

ACE HE Type
24, 30 & 35

USER INSTRUCTIONS

TO BE GIVEN TO THE USER

CE
0086
PIN 87/BQ/44

G.C. Appliance No. 47-333-19 (Ace HE 24)
G.C. Appliance No. 47-333-20 (Ace HE 30)
G.C. Appliance No. 47-333-13 (Ace HE 35)

COMBINATION CONDENSING BOILER

CONTENTS

1	**INTRODUCTION**	**0**
1.1	Important Information	1
1.2	General Description	1
2	**TECHNICAL SPECIFICATIONS**	**2**
2.1	Gas Categories	2
2.2	Performance Data	2
2.3	General Specifications	3
2.4	Overall Dimensions & Minimum Clearances	4
2.5	Concentric Air / Flue Duct Specifications	4
2.6	Specification for Chimney Flue Liner Kit (Type B23)	6
2.7	Specification for Twin Flued (Type C53)	7
2.8	Additional Concentric Flue Kits and Plume Diverter Kit	7
2.9	Appliance Hydraulic Circuits	10
3	**INSTALLATION REQUIREMENTS**	**11**
3.1	Statutory Requirements	11
3.2	Appliance Location	11
3.3	Flue Terminal Position	11
3.4	Ventilation Requirements	11
3.5	Condensate Disposal	12
3.6	Gas Supply	12
3.7	Central Heating System	12
3.8	Domestic Hot Water System	14
3.9	Electricity Supply	14
3.10	External Controls	14
4	**APPLIANCE INSTALLATION**	**15**
4.1	Unpacking The Appliance	15
4.2	Preparing The Wall	15
4.3	Mounting The Appliance	16
4.4	Central Heating & Domestic Hot Water Service Connections	16
4.5	Gas Connection	16
4.6	Condensate Connection	17
4.7	Pressure Relief Valve Connection	17
4.8	Air / Flue Duct Installation	17
4.9	Electrical Connections	18
5	**COMMISSIONING AND TESTING**	**19**
5.1	Filling the Water System	19
5.2	Commissioning the Appliance	20
5.3	DHW Flow Rate	21
5.4	Final Checks	21
5.5	Lockout Indication and reset the appliance	21
5.6	Frost Protection	21
5.7	Overheat Protection	21
5.8	Other Features	21
5.9	Users Instructions	22
5.10	Appliance Log Book	22
6	**ROUTINE SERVICING**	**23**
6.1	Combustion Check	23
6.2	Gas Control Valve, Fan & Burner Assembly	25
6.3	Burner	25
6.4	Ignition & Detection Electrodes	25
6.5	Combustion Chamber & Heat Exchanger	25
6.6	Condensate Drain	25
6.7	Domestic Cold Water Inlet Filter	25
6.8	Re-assembly & Re-commissioning	26
6.9	Final Checks	26
7	**INTERNAL WIRING DIAGRAM**	**27**
7.1	Functional Flow Wiring Diagram	27
8	**FAULT FINDING**	**28**
8.1	General	28
8.2	Diagnostic Digital Display	28
8.3	Faulting Finding Codes	28
8.4	Domestic Hot Water Fault Finding	28
8.5	Central Heating Fault Finding	29
9	**REPLACEMENT OF PARTS**	**31**
9.1	Ignition and Detection Electrodes	31
9.2	Igniter Unit and Ignition Leads	31
9.3	Gas Control Valve	32
9.4	Fan	33
9.5	Burner	33
9.6	Combustion Chamber Front Insulation	34
9.7	Combustion Chamber Rear Insulation	34
9.8	Heat Exchanger	34
9.9	Pump (Head Only)	35
9.10	Diverter Valve Motorised Head	35
9.11	Hydroblock Assembly	36
9.12	Expansion Vessel	36
9.13	Pressure Relief Valve	37
9.14	Water Temperature Sensors	37
9.15	Flue Sensor	37
9.16	Plate Heat Exchanger and Filter	37
9.17	Condensate Drain System	38
9.18	Pressure Gauge	38
9.19	Auto Air Vent	39
9.20	Control PCB	39
9.21	Time Clock	39
9.22	DHW Flow Switch, DHW Flow Regulator and DHW Filter	39
9.23	Draining The Appliance	40
10	**SHORT PARTS LIST**	**41**

1 INTRODUCTION

The Halstead **Ace HE24**, **Ace HE30** and **Ace HE35** are high efficiency condensing, fully automatic, wall mounted gas appliances suitable for either room sealed or opened flued applications, for use with natural gas (G20) only. These combination appliances provide the user with both central heating (CH) and domestic hot water (DHW) on demand.

The appliances feature an attractive white stove enamelled casing, with inset control panels. The flue systems are in white stove enamel to give a clean attractive appearance to the installation.

A standard horizontal concentric air/flue duct terminal is available, (maximum duct length of 755 mm (29¾ in)), suitable for room sealed applications. The duct assembly is connected to the appliance via a turret, which can be orientated to provide different horizontal duct directions. Extension ducts may be fitted in accordance with and up to the maximum dimensions stated in these instructions.

A vertical concentric outlet kit is also available for installations where an outside wall is not accessible or where it is desired to fit the duct 'through the roof'. Installation using the horizontal duct is described in the main text of these instructions and additional information is provided in the vertical outlet kit for the vertical installation option. (Note: If the vertical outlet kit is to be used, access to the roof is necessary).

Other flue kits are available for open flued, B_{23}, and twin flued, C_{53}, and special C_{13} & C_{33}, applications, contact Halstead Boiler Ltd Service Help Line: 08450 710780, for further details,

ONLY HALSTEAD APPROVED FLUE KITS OR EXTENSIONS MAY BE USED WITH THESE APPLIANCES.

1.1 IMPORTANT INFORMATION

IT IS A STATUTORY REQUIREMENT THAT ALL GAS APPLIANCES ARE INSTALLED BY COMPETENT PERSONS, (i.e. CORGI REGISTERED INSTALLERS) IN ACCORDANCE WITH THE GAS SAFETY (INSTALLATION AND USE) REGULATIONS (CURRENT EDITION). FAILURE TO COMPLY WITH THESE REGULATIONS MAY LEAD TO PROSECUTION.

These appliances have been tested and certified in order to satisfy the necessary European Directives and comply with the latest Building Regulations, including the efficiency requirements of the SEDBUK scheme.

Gas Appliance Directive	90/396/EEC
Efficiency of Hot Water Boilers Directive	92/42/EEC
Low Voltage Directive	93/68/EEC
Electromagnetic Compatibility Directive	92/31/EEC

No modifications to these appliances should be made unless they are fully approved by the manufacturer.

Appliance installation must be carried out by a competent person and must be in accordance with the current legislation in force at the time of installation, in the country of destination.

The manufacturer's instructions must not be taken as overriding any statutory requirements.

GAS LEAKS. DO NOT OPERATE ANY ELECTRICAL SWITCHES, OR USE A NAKED FLAME. TURN OFF THE GAS SUPPLY. VENTILATE THE AREA BY OPENING DOORS AND WINDOWS. CALL OUT YOUR LOCAL GAS SUPPLIER TEL: 0800 111 999.

Control of Substances Hazardous to Health

Under Section 6 of the Health and Safety at Work Act 1974, it is required to provide information on substances hazardous to health.

The adhesives and sealants used in this appliance are cured and give no known hazard in this state.

Insulation Pads – These can cause irritation to skin, eye and the respiratory tract. If you have a history of skin complaint you may be susceptible to irritation. High dust levels are usual only if the material is broken. Normal handling should not cause discomfort, but follow normal good hygiene and wash your hands before eating, drinking or going to the lavatory. If you do suffer irritation to the eyes or severe irritation to the skin seek medical attention.

Gas and Electricity Consumer Council (Energywatch)

Energywatch is an independent organisation, which protects the interests of gas users. If you need advice concerning energy issues, they may be contacted on their consumer help line number: 08459 060708, or via their web site; http://www.energywatch.org.uk.

1.2 GENERAL DESCRIPTION

The appliances incorporate a microprocessor based, fully modulating air/gas ratio control system with direct burner ignition, which provides a modulated heat output to either central heating (CH) or domestic hot water (DHW) demands, and with internal frost protection provided as standard. The heat exchanger is constructed from stainless steel encased in high temperature polymer.

A combined circulating pump, diverter valve and automatic air vent assembly, pressure gauge, safety valve and system expansion vessel are included. Isolation valves are fitted to the service connections. The appliances have a DHW flow detection device, which gives priority to DHW demand and proportions the required heating load to the DHW flow rate, an electro-mechanical 24 hour time clock is also fitted as standard.

The appliances may be used with any certified mains voltage room thermostat, and can operate without the need for an automatic bypass valve, however if thermostatic radiator valves are installed it is recommended that one radiator is fitted with lockshield valves, to allow the pump overrun facility to operate correctly. A separate CH expansion vessel is not required if the total CH system content is less than 84 litres, but one is required for systems with volumes greater than 84 litres; refer to section 3.7. A separate DHW expansion vessel is not required.

It is recommended that a drain cock is fitted at the lowest point in the system.

2 TECHNICAL SPECIFICATIONS

2.1 GAS CATEGORIES

These appliances are certified to comply with the requirements of EN 483, EN 677, and EN 625 for use in GB and IE (Great Britain and Ireland) using gas category 2H (G20 with a governed gas supply at 20 mbar (8 in.wg) inlet pressure).

The appliance classification (as defined in EN 483) may be any of the following depending on the chosen flue option: C13, C33, C53, or B23

2.2 PERFORMANCE DATA

Appliance			Ace HE24	Ace HE30	Ace HE35
Mode	**Rate**				
Central Heating Output (non-condensing) (80 - 60 °C)	Max	kW (Btu/h)	18.0 (61500)	23.1 (78900)	24 (81900)
	Min	kW (Btu/h)	6.0 (20500)	7.2 (24600)	8.3 (28300)
Central Heating Output (condensing) (50 - 30 °C)	Max	kW (Btu/h)	19.7 (67300)	25.4 (86700)	26 (88700)
Central Heating Input Max Rate	Net	kW (Btu/h)	18.4 (62800)	23.9 (81600)	24.5 (83600)
	Gross	kW (Btu/h)	20.4 (69700)	24.8 (84700)	27.2 (92800)
Central Heating Input Min Rate	Net	kW (Btu/h)	5.6 (19100)	6.9 (23600)	8.5 (29000)
	Gross	kW (Btu/h)	6.2 (21200)	7.5 (25600)	9.4 (32100)
Domestic Hot Water Output	Max	kW (Btu/h)	24.0 (82000)	30.0 (102400)	35.0 (119400)
	Min	kW (Btu/h)	6.0 (20500)	7.2 (24600)	8.3 (28300)
Domestic Hot Water Input Max Rate	Net	kW (Btu/h)	24.6 (84000)	31.3 (106900)	35.7 (121800)
	Gross	kW (Btu/h)	27.3 (93200)	34.8 (118900)	39.6 (135200)
Domestic Hot Water Input Min rate	Net	kW (Btu/h)	5.6 (19100)	6.9 (23600)	8.5 (29000)
	Gross	kW (Btu/h)	6.2 (21200)	7.5 (25600)	9.4 (32100)
Central Heating Gas Rate (after 10 min operation - hot)	Max	m3/h ft3/h	1.95 (68.9)	2.49 (87.9)	2.59 (91.5)
Domestic Hot Water Gas Rate (after 10 min operation - hot)	Max	m3/h ft3/h	2.6 (91.8)	3.31 (116.9)	3.78 (133.5)
Seasonal Efficiency		%	90.1	90.1	90.1
Seasonal Efficiency (SEDBUK)		Band	"A"		
Nox Classification		Class	"5"		

Appliance		Ace HE24	Ace HE30	Ace HE35
Design Domestic Hot Water Performance raised 35°C	Ltr/min (gpm)	9.8 (2.2)	12.3 (2.8)	14.3 (3.1)
DHW Specific Rate (D) EN 625	Ltr/min	10.9	14.7	16.7
Min Mains Water Inlet Pressure for Max Heat Output	Bar (psi)	1.0 (14.5)		
Min Mains Water Inlet Pressure for Operation	Bar (psi)	0.3 (4.4)		
Max Mains Water Inlet Pressure	Bar (psi)	10 (145)		
Min Domestic Hot Water Flow Rate for Operation	Ltr/min (gpm)	2.0 (0.45)		
Min Central Heating System Pressure	Bar	0.5		
Max Central Heating System Pressure	Bar	2.5		
Max Domestic Hot Water Temperature	°C	55		
Min Domestic Hot Water Temperature	°C	40		
Max Central Heating Flow Temperature	°C	80		
Min Central Heating Flow Temperature	°C	30		

2.3 GENERAL SPECIFICATIONS

Appliance		Ace HE24	Ace HE30	Ace HE35
Total weight (full)	kg	45.1	51.7	51.7
Total weight (empty)	kg	43.0	49.0	49.0
Max lift weight	kg	42.0	48.0	48.0
Total water capacity	Ltr	1.8	2.1	21.1
Integral expansion vessel capacity	Ltr	8		
Maximum heating system water content using fitted expansion vessel, @ 0.75 bar	Ltr	84		
Electrical supply		230V 50Hz Fuse at 3A		
Internal fuse		T4H 4A 250V		
Maximum power consumption	W	140	160	145
IP Rating		IP20		
Flue gas temperature Nat Gas 50/30	°C	53	49	56
CO_2 value max rate (Nat Gas) (G20)	%	9.2 ± 0.3 case on 9.0 ± 0.2 case off		
CO_2 value min rate (Nat Gas) ref only (G20)	%	8.6 ± 0.3	8.6 ± 0.3	8.6 ± 0.3
CO/CO_2 Ratio max rate (Nat Gas) (G20)		0.0005 + 0.005	0.0003 + 0.005	0.0003 + 0.005
Flue products mass flow rate (Nat Gas) (G20)	g/s	14.7	11.0	16.0
Gas Valve Offset @ min rate	Pa	-5.0		

Connections

	Ace HE24 Ace HE30	Ace HE35
Gas	15 mm compression	22 mm compression
CH flow	22 mm compression	
CH return	22 mm compression	
DHW inlet	15 mm compression	
DHW outlet	15 mm compression	
Pressure relief valve outlet	15 mm compression	
Condensate Drain	21.5 - 22 mm plastic overflow pipe	

NOTE: THE STATED HEAT INPUT AND CO_2 VALUES ARE NOMINAL AND MAY VARY BY ± 5-10% WHEN THE APPLIANCE IS RUN WITH LINE GAS, DUE TO FLUCTUATIONS IN GAS QUALITY.

2.4 OVERALL DIMENSIONS AND MINIMUM CLEARANCES

1

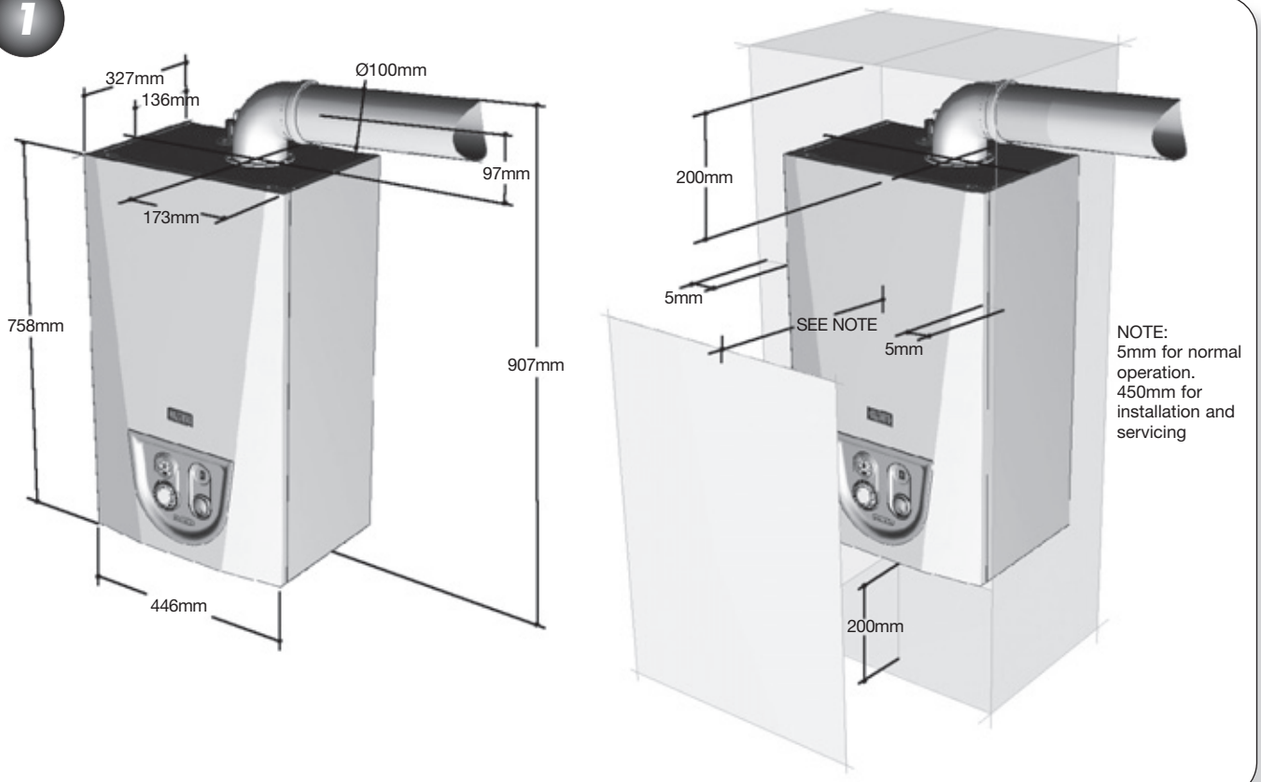

2.5 CONCENTRIC AIR / FLUE DUCT SPECIFICATIONS

The Ace HE24, HE30 and HE35 can be installed to a number of different concentric flue systems. The different flue applications as shown in Figure 2 are available as kits usually comprising the connecting parts to the appliance and end terminal. Flue extension ducts and extension elbows are available as accessories.

2

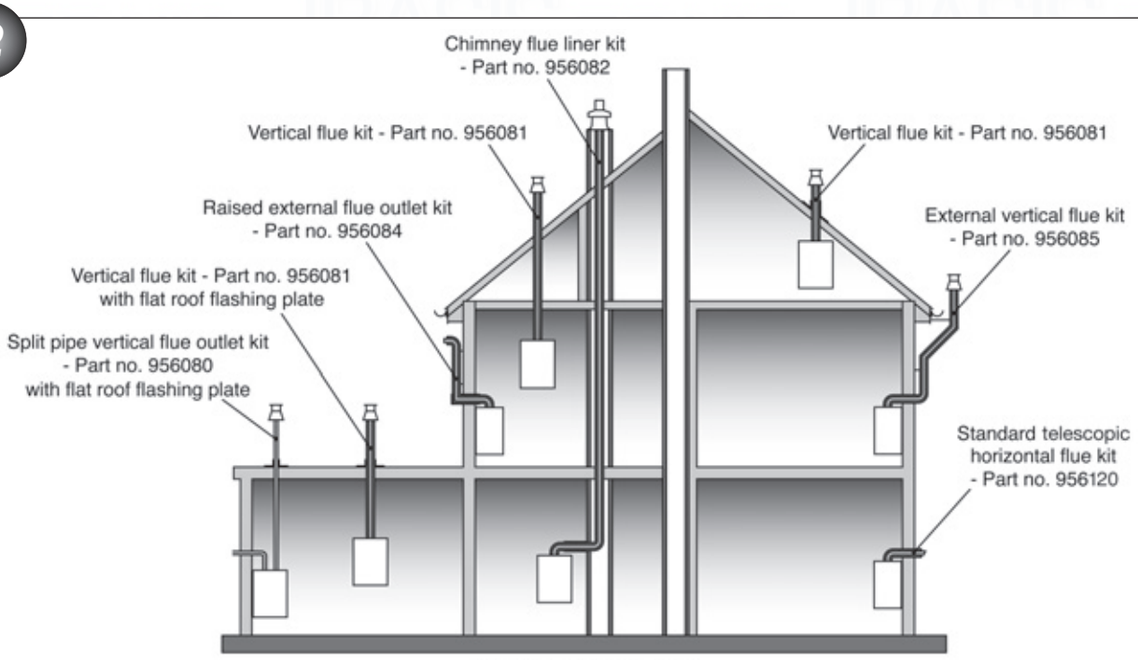

Flue system application

4 The following flue systems are available for the ACE HE range

2.5.1 KIT A + TELESCOPIC HORIZONTAL WALL TERMINAL (C13) - PART NO.956120

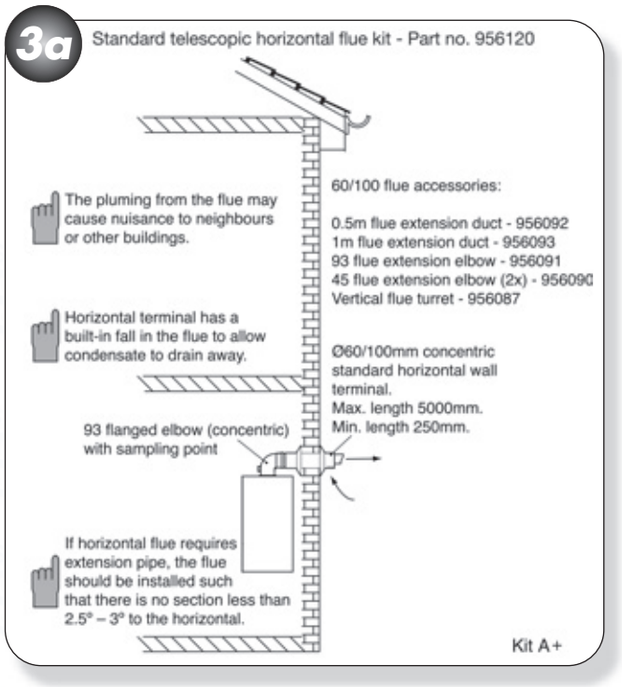

Traditional concentric flue system, Figure 3a, with a maximum length of 5000mm. The flanged flue elbow is designed with 3° slope towards the appliance so that the condensate can easily drain off. It has to be considered that for every metre horizontal flue length the terminal exit centreline is approx. 45 mm higher than the elbow's centreline.

The standard telescopic terminal is 615mm max length and 430mm min length, but can be cut to a minimum flue length of 250mm, which is suitable for single, 100mm (4"), brick walls.

2.5.2 KIT B VERTICAL CONCENTRIC FLUE TERMINAL (C33) - HBL PART 956081

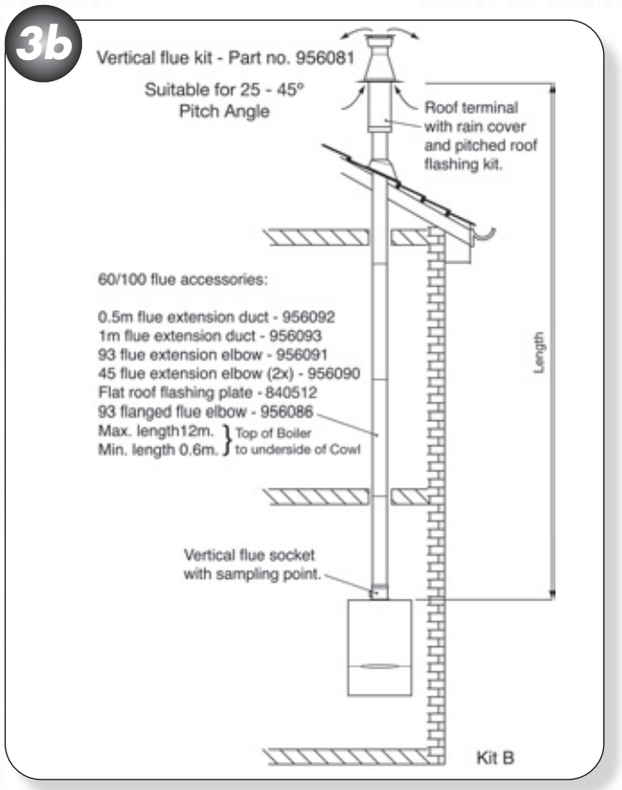

Standard concentric (ø100/60) vertical flue application, Figures 3b, 3c, through roof attics with a maximum length of 12000mm. The kit comprises of the roof terminal, flashing kit, vertical adaptor with sampling point and bracket.

The maximum length is measured from the top of the appliance casing to the underside of the air cowl.

For installation details refer to the flue kit instructions.

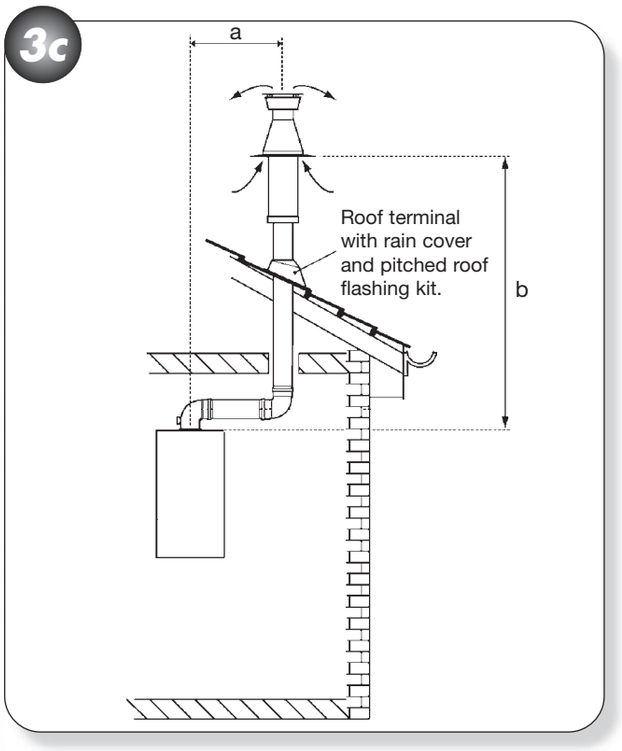

Fig 3(c) Offset vertical flue.

'a' measured from boiler flue outlet centre line to the centre line of the extension elbow.

'b' measured from the top of the boiler to the underside of the air cowl.

Maximum allowable length of a + b = 8900mm

2.5.3 2.5.3 KIT C: HORIZONTAL ANTI-PLUME FLUE KIT (C13) – PART NO. 956084

If the standard horizontal terminal is likely to cause nuisance to a neighbour or buildings, because of excess pluming, then this particular flue kit raises the flue gas outlet point to a higher elevation with the minimum amount of changes. The flue gas duct is teed-off from the concentric part and covered by an 80mm outer tube to protect the flue duct from freezing. The air in-take remains at the lower level (see Figure 3d).

If choosing this option then the external flue duct length should be taken into account when calculating equivalent flue length.

For installation details refer to the flue kit instructions.

Dimensions from vertical terminals to opening windows should be in line with Figure 5.

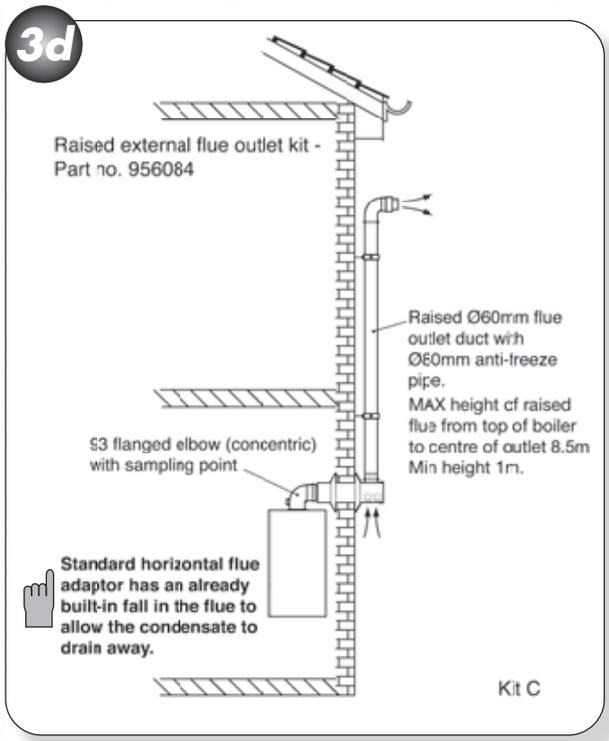

2.5.4 KIT D EXTERNAL VERTICAL FLUE - (C33) PART NO: 956085

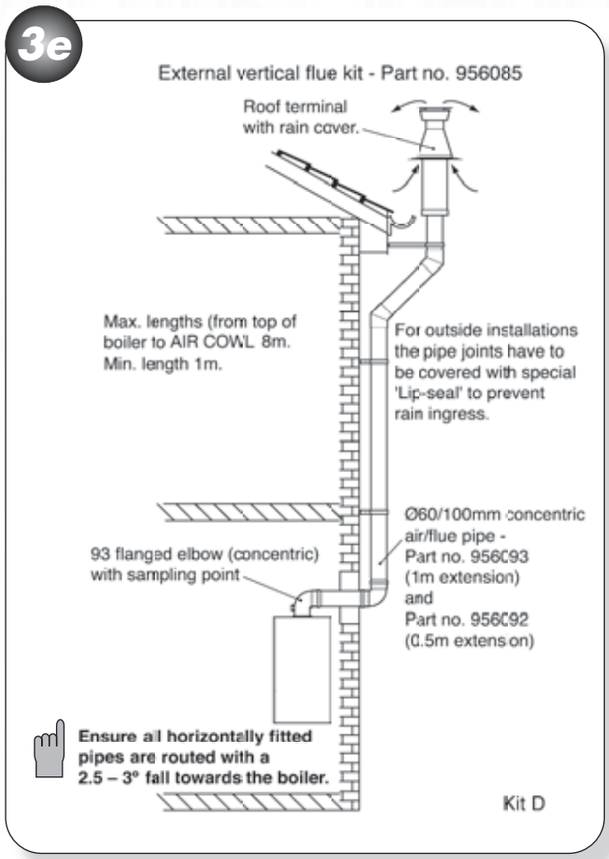

Suitable for installations if the appliance can't be repositioned and where other horizontal flue options may causes some nuisance to neighbours or buildings. The flue kit contains some additional 45° elbows and extension ducts as well as a special wall bracket to pass the guttering (see Figure 3e). The concentric flue will be routed vertically alongside the outside wall to above the roofline. Special seals are required to prevent rainwater penetrating the pipe joints.
For installation details refer to the flue kit instructions.

2.6 KIT E CHIMNEY FLUE LINER KIT (B23) – PART NO. 956082

This kit is suitable for open flue application in accordance with BS5440 where a room sealed flue installation is impractical. The kit comprises of a flue adaptor from the appliance to the chimney, a flexible plastic flue liner with connection parts and chimney terminal (see Figure 3f). Where an open flue system is used, then an air vent must be provided in the same room or internal space as the flue duct air inlet, see section 3.4.

For installation details refer to the flue kit instructions.

Maximum flue resistive length = 30m.

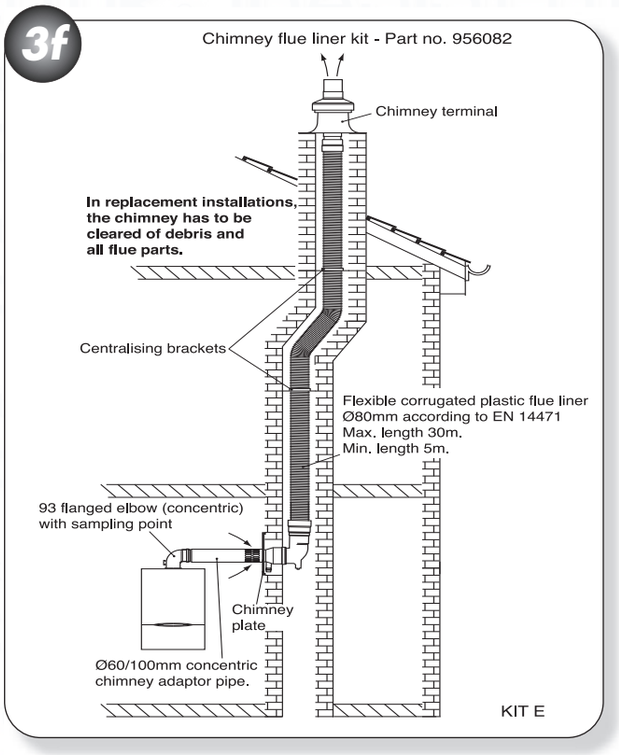

A flue system can be built up from the components detailed in the table, but the total flue resistance must not exceed the maximum stated.

FLUE LENGTHS

Length supplied in standard kit - horizontal	815mm
Max horizontal length *(from boiler to chimney - 60/100mm)*	2000mm
Min horizontal length *(from boiler to chimney - 60/100mm)*	100mm
Max vertical length *(from boiler to chimney - 60/100mm)*	2000mm
Min vertical length *(from boiler to chimney - 60/100mm)*	200mm
Length supplied in standard kit - vertical *(available in 10m, 20m and 30m length)*	N/A
FLEXITUBE MUST BE PURCHASED AS AN ACCESSORY TO COMPLETE THE KIT *(See below)*	
Flexi tube min length	5m
Flexi tube max length	30m

ACCESSORIES

Description	Part No.	Resistive Length
HORIZONTAL - 60/100 Accessories		
Flue extension duct - 500mm	956092	450mm
Flue extension duct - 1000mm (Incl. 1 x support bracket)	956093	950mm
93° extension elbow	956091	1550mm
45° extension elbow (pair)	956090	775mm
Air inlet duct - included in kit	N/A	N/A
Straight adapter (60/80) - included in kit	N/A	N/A
91.5° adapter elbow (80/80) - included in kit	N/A	N/A
Support bracket - 100mm	840517	N/A
93° flanged elbow - included in kit	956082	N/A
Vertical turret socket	956087	N/A
VERTICAL - Accessories		
Flexi tube - 10m	956110	10m
Flexi tube - 20m	956111	20m
Flexi tube - 30m	956112	30m
Straight duct (80) - included in kit	N/A	N/A
Chimney terminal - included in kit	N/A	N/A

***NOTE:* RESISTIVE LENGTH INFORMATION ONLY REQUIRED FOR COAXIAL FLUE PARTS. THE CORRUGATED (FLEXI TUBE) FLUE PARTS ARE FIXED AND ALL PARTS ARE REQUIRED FOR EVERY APPLICATION.**

2.7 KIT F: TWIN FLUE SYSTEM (C53) – PART NO. 956080

This flue system kit is designed for installations where the air intake position is different than the flue duct exit point. The kit comprises of a twin adaptor from which the air intake is taken from the adjacent outside wall (see example Figure 3g) and the flue duct is routed vertically through the roof.

It has to be noted that the flue duct is under pressure when the appliance is in operation and the duct can leak poisonous carbon monoxide if the duct components are not correctly assembled. It is **not** recommended to route the flue duct through living space areas, i.e. bed rooms, living rooms etc.

For installation details refer to the instructions provided with the twin flued kit.

For C53 flue systems the terminal for the supply of combustion air and for the evacuation of combustion products shall not be installed on opposite walls of the building.

Maximum flue resistance permitted for a twin flued system = 52 Pa

Minimum flue resistance permitted for a twin flued system = 23.5 Pa

Flue Component	Flue Resistance (Pa)	Part Number
Twin Flue Adaptor (required)	9.5	-
Air Inlet Terminal (required)	3	-
Chimney Terminal (required)	0.5	-
80 mm dia straight duct 1 metre	1	956101
80 mm dia straight duct 2 metre	2	956102
90° Elbow (80/80)	8	956100
45° Elbow (80/80)	4	956099

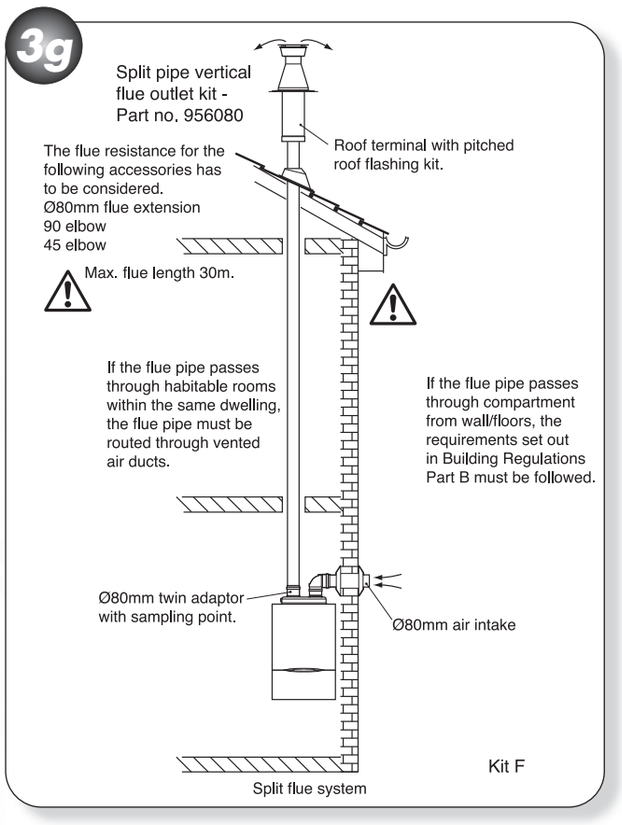

A flue system can be built up from the components detailed in the table, but the total flue resistance must not exceed the maximum stated.

2.8 ADDITIONAL CONCENTRIC FLUE KITS

The following additional concentric kits are available as optional extras.

Flue Extension Ducts - 1000 mm and 500 mm long, (each duct extends the flue length by up to 950 mm and 450 mm respectively).

93° Extension Elbow - Allows an additional bend in the flue, and has an 'equivalent length' of 1550 mm. This elbow is mechanically different from the flanged elbow supplied as standard with the appliance, but has the same equivalent length.

45° Extension Elbow - Allows an additional bend in the flue and has an 'equivalent length' of 775 mm.

Vertical Turret Socket - For use with elevated horizontal flues and vertical terminals.

Vertical Roof Terminal - For use where an external wall is not available, or where it is desirable to route the ducts vertically.

For installation details refer to the instructions provided with the individual flue kits.

These optional kits may be used with the standard flue kits to produce an extensive range of flue options, providing that the following rules are strictly obeyed.

a) The maximum/minimum permissible length of the room sealed flue system are:

Horizontal flue terminal (all orientations)	maximum 5000 mm (197 in)
Horizontal flue terminal (rear exit)	minimum 250 mm (10 in)
Vertical flue terminal	maximum 12000 mm (472 in)
Vertical flue terminal	minimum 600 mm (23 1/2 in)

The 'equivalent' flue length must not exceed the maximum values stated.

b) The standard terminal must always be fitted horizontally; horizontal ducts must have a continuous fall towards the appliance of 2.5°. This ensures condensate runs back into the appliance from the flue system. The vertical terminal must always be used if a vertical outlet is required.

c) The concentric flue system must use either a flanged elbow or a vertical flue turret socket at the entry/exit to the appliance.

d) All joints must be correctly made and secured in accordance with the installation instructions. When cutting ducts, avoid swarf, uneven and sharp edges to maintain duct integrity.

Refer to Figures 2 and 3 to determine which option kits are required before commencing the installation. Instructions for installing the appliance with a horizontal flue and straight extension ducts are included in the main text of these instructions (section 4.8).

2.8.1 PLUME DIVERTER TERMINAL INSTALLATION

Plume Diverter Kit Part No: 956103

(For use with Standard horizontal telescopic flue kit - Part no 956120 - only)

This kit is provided to assist in fitting a condensing boiler with reduced clearances when fitted in good practice according to the Guide to Condensing Boiler Installation published by DEFRA/HMSO.

This kit allows the boiler flue outlet to be directed to the left or to the right only.

INSTALLATION INSTRUCTIONS

Under certain operating conditions condensing appliances have a tendency to form a plume of water vapour at the terminal. Therefore consideration should be given when fitting the Plume Diverter in terms of plume dispersal onto adjacent surfaces and neighbouring properties.

a) Refer to section 2.5 for instructions on fitting the flue system. Also see Figure 5 for all other clearances.

The resistance of the diverter is equivalent to 0.5 metre of flue length. Ensure this is used when calculating the maximum allowable flue length. (maximum horizontal flue length restricted to 4.5 metres when using the plume diverter).

3h

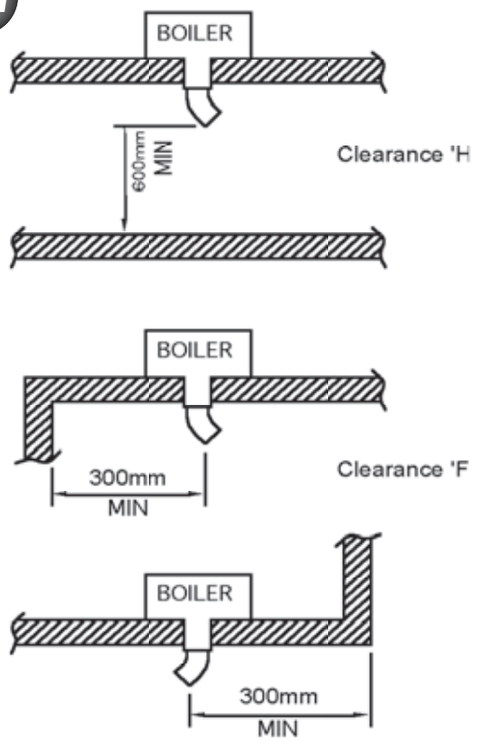

3i

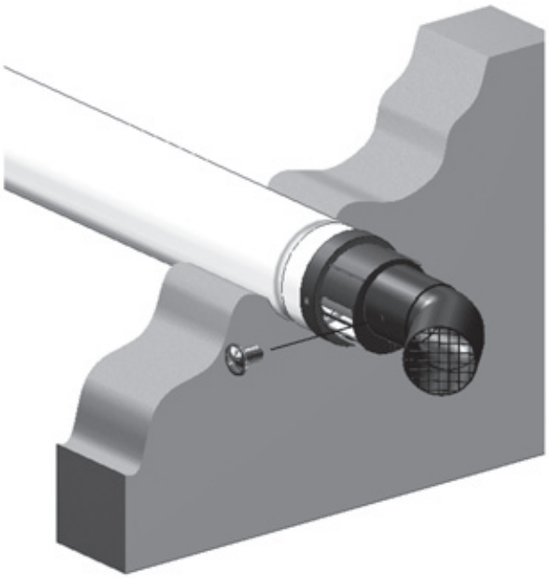

Note.
The Plume Diverter terminal must not under any circumstances deflect flue products downwards.

The diverter allows the terminal clearance to be reduced as follows (see diagrams below):

Clearance H – From a surface facing the terminal - 600mm.

Clearance F – From internal or external clearances - 300mm.

b) Choose the direction required to deflect the flue products **(left or right only)**

c) Push the diverter elbow onto the angled outlet of the flue terminal in the desired rotational position and ensure the diverter is pushed up to the shoulder to fully engage the rubber seal.

d) Fix the diverter to the flue terminal with the self drilling screw provided. **Do not use a power tool to fit screw.**

2.9 APPLIANCE HYDRAULIC CIRCUITS

4

CH MODE

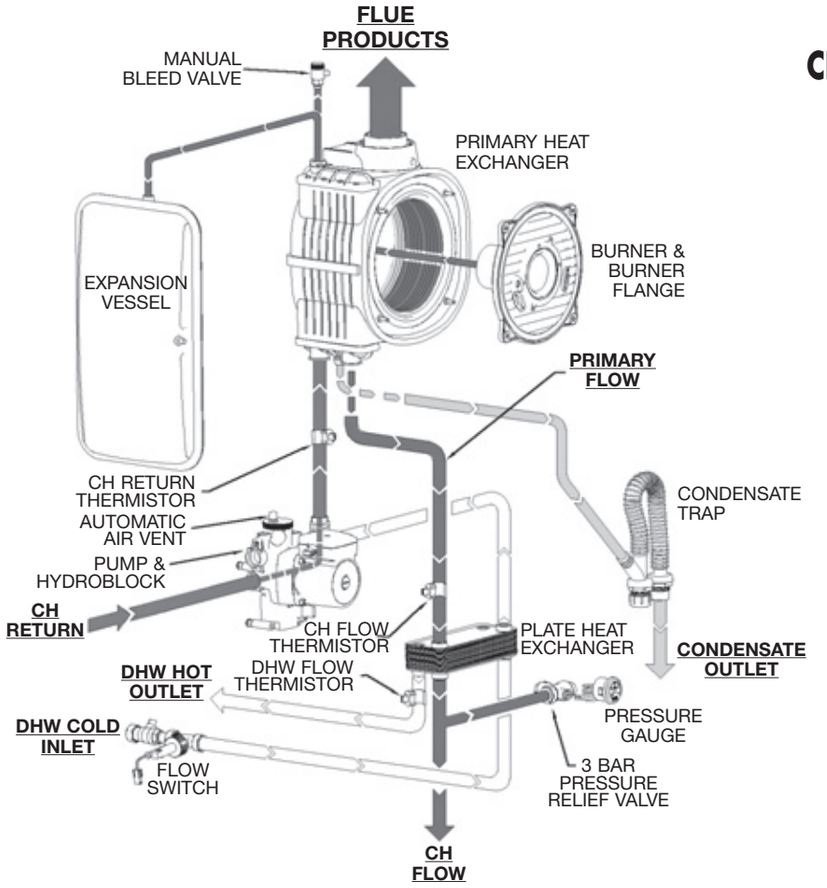

DHW MODE

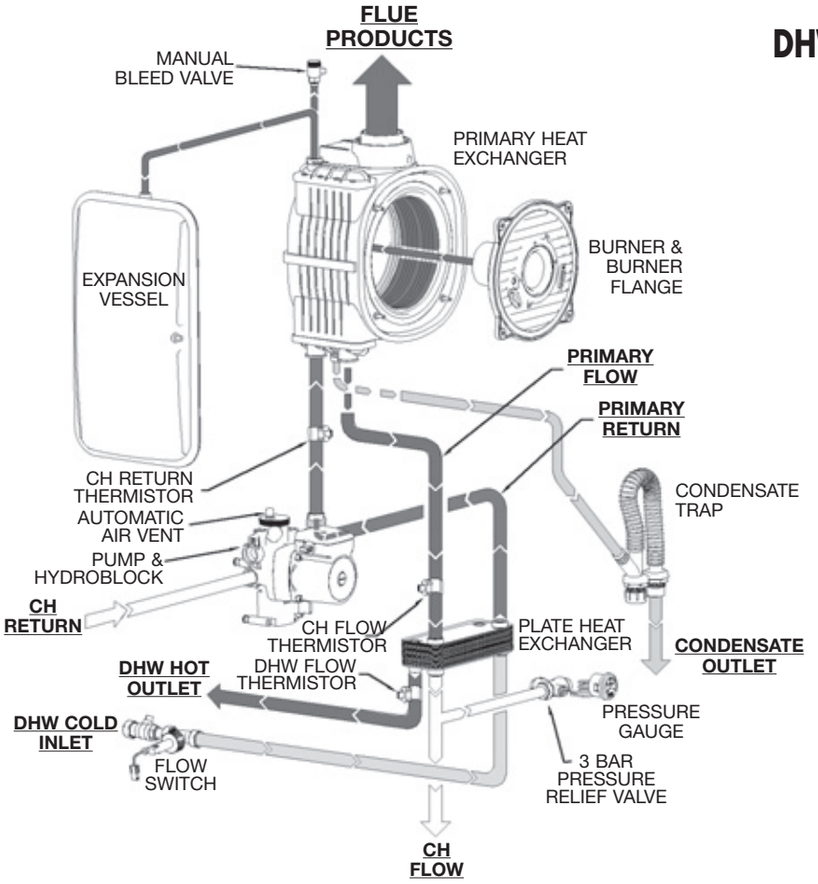

3 INSTALLATION REQUIREMENTS

3.1 STATUTORY REQUIREMENTS

GAS SAFETY (INSTALLATION AND USE) CURRENT REGULATIONS

The appliance is suitable only for installation in GB and IE and should be installed in accordance with the rules in force.

In GB, a CORGI Registered Installer must carry out the installation. It must be carried out in accordance with the relevant requirements of the:

Gas Safety (Installation and Use) Regulations

The appropriate Building Regulations either The Building Regulations, The Building Regulations (Scotland), Building Regulations (Northern Ireland).

The Water Fitting Regulations or Water Byelaws in Scotland.

The Current I.E.E Wiring Regulations.

Where no specific instructions are given, reference should be made to the relevant British Standard code of Practice.

In Ireland (IE), the installation must be carried out by a Competent Person and installed in accordance with the current edition of I.S.813 "Domestic Gas Installations", the current Building Regulations and reference should be made to the current ETCI rules for electrical installation.

It should also be in accordance with the relevant recommendations in the current editions of the following British Standards and Codes of Practice: BS 5449, BS 5546, BS 5440-1, BS 5440-2, BS 6798, BS 6891, Institute of Gas Engineer document IGE/UP-7, BS 7074 (expansion vessel) and IS813 for IE.

IMPORTANT NOTE: Manufacturer's instructions must NOT be taken in any way as overriding statutory obligations.

3.2 APPLIANCE LOCATION

The following limitations MUST be observed when siting the appliance:

a) The appliance is not suitable for external installations. The position selected for installation should be within the building, unless otherwise protected by a suitable enclosure and MUST allow adequate space for installation, servicing and operation of the appliance and for air circulation around it (Section 2.4 and 3.4).

b) This position MUST allow for a suitable flue system and terminal position. The appliance must be installed on a flat vertical wall, which is capable of supporting the weight of the appliance and any ancillary equipment.

c) If the appliance is to be fitted in a timber framed building it should be fitted in accordance with the 'Guide for Gas Installations In Timber Frame Housing', Institute of Gas Engineers document IGE/UP-7. If in doubt, advice must be sought from the Local Gas Supplier.

d) The appliance is approved to a protection rating of IP20. Therefore if the appliance is to be installed in a room containing a bath or a shower, any electrical switch or control utilising mains electricity must be so situated that it cannot be touched by a person using the bath or shower. Attention is drawn to the requirements of the current BS 7671 (I.E.E Wiring Regulations) and in Scotland the electrical provisions of the Building Regulations applicable in Scotland.

3.3 FLUE TERMINAL POSITION

Detailed recommendations for flue installation are given in BS 5440-1. The following notes are for general guidance.

a) The appliance MUST be installed so that the terminal is exposed to the external air.

b) It is important that the position of the terminal allows free passage of air across it at all times.

c) It is ESSENTIAL TO ENSURE that products of combustion discharging from the terminal cannot re-enter the building or any other adjacent building, through ventilators, windows, doors, other sources of natural air infiltration, or forced ventilation/air conditioning.

d) The minimum acceptable dimensions from the terminal to obstructions and ventilation openings are specified in Figure 5.

e) If the terminal discharges into a pathway or passageway check that combustion products will not cause nuisance and that the terminal will not obstruct the passageway.

f) Where the lowest part of the terminal is fitted less than 2000 mm (78 in) above the ground, above a balcony or above a flat roof to which people have access, the terminal MUST be protected by a purpose designed K6 terminal guard (optional extra: Part No. 951507).

g) The air inlet / flue outlet MUST NOT be closer than 25 mm (1 in) to combustible material.

h) Condensing appliances have a tendency to form a plume of water vapour at the terminal under certain operating conditions. This is normal but positions where this would cause damage or a nuisance should be avoided. Consideration should be given to the dispersal of the plume in terms of adjacent surfaces and neighbouring properties. A special flue terminal, (Kit C), is available to raise the flue discharge point; use of this terminal will limit the maximum flue length available. For further information contact: Halstead Boiler Ltd, Service Help Line: 08450 710780.

3.4 VENTILATION REQUIREMENTS

Detailed recommendations for air supply are given in BS 5440-2. The following notes are for general guidance.

a) It is not necessary to have a purpose provided air vent in the room or internal space in which a room-sealed appliance is installed.

b) Cupboard or compartment ventilation is not necessary for a room-sealed appliance providing that the minimum clearances are maintained.

c) Where an open flued, (B23), system is used, then an air vent must be provided in the same room or internal space as the flue duct air inlet, with a minimum free-area of at least:

Ace HE 30	121.5 cm^2
Ace HE 24	88 cm^2
Ace HE 35	143.5 cm^2

5 FLUE TERMINAL POSITION

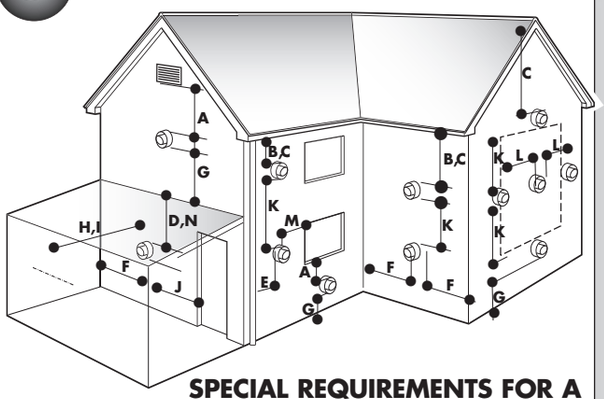

SPECIAL REQUIREMENTS FOR A VERTICALLY BALANCED FLUE

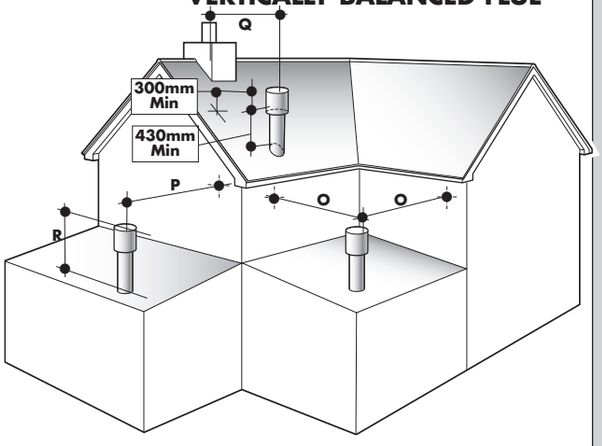

	Position	Minimum spacing	
A	Directly below an openable window, air vent, or any other ventilation opening	300mm	12in
B	Below gutter, drain/soil pipe	75mm	3in
C	Below eaves	200mm	8in
D	Below a balcony	*2500mm	98in
E	From vertical drain pipes and soil pipes	150mm	6in
F	From internal or external corners	+300mm *1000mm	12in 40in
G	Above adjacent ground or balcony level	300mm	12in
H	From a surface facing the terminal	+600mm *2500mm	24in 98in
I	Facing terminals	+1200mm *2500mm	48in 98in
J	From opening (door/window) in carport into dwelling	*not recommended	
K	Vertically from a terminal on the same wall	1500mm	60in
L	Horizontally from a terminal on the same wall	300mm	12in
M	Adjacent to opening	300mm	12in
N	Below carport	*not recommended	
O	From adjacent wall	300mm	12in
P	From adjacent opening window	1000mm	40in
Q	From another terminal	600mm	24in
R	Minimum height	300mm	12in

* Recommended by the boiler manufacturing industry to prevent pluming nuisance and damage to buildings.

† Distances can be reduced if plume diverter kit is fitted.

d) If the appliance is installed in a room or internal space with other opened flued appliances, then the size of the air vent necessary should be calculated in accordance with BS 5440-2 Table 2.

e) Where an open flued system is used, and the flue duct air inlet is within a compartment then high and low level air vent are necessary in the compartment, the size of the vents should be calculated in accordance with BS 5440-2 Table 2.

3.5 CONDENSATE DISPOSAL

The condensate drain connection is suitable for either 21.5 mm or 22 mm plastic push fit or adhesive overflow pipes and fittings. It should be piped to drain, preferably within the building, maintaining a continuous 2.5° fall away from the appliance. If the drain is routed to outside it should be to a drain or soak away, and any external pipe work should be in 32 mm. Insulation to protect from freezing in cold weather conditions is also advisable.

3.6 GAS SUPPLY

a) The Gas Supplier should be consulted at the installation planning stage in order to establish the availability of an adequate supply of gas.

b) An existing service pipe MUST NOT be used without prior consultation with the Gas Supplier.

c) A gas meter can only be connected by the Gas Supplier or by their contractor.

d) An existing meter and/or pipe work should be of sufficient size to carry the maximum appliance input plus the demand of any other installed appliance. (BS 6891: 1988).

A minimum of 22 mm diameter pipe work is recommended within 1000 mm of the appliance gas cock.

e) Natural gas appliances: The governor at the meter must give a constant outlet pressure of 20 mbar (8 in.wg) when all appliances on the system are running.

f) The gas supply line should be purged. WARNING: Before purging open all doors and windows, also extinguish any cigarettes, pipes, and any other naked lights.

g) The complete installation must be tested for gas tightness.

3.7 CENTRAL HEATING SYSTEM

a) The appliances incorporate all the components necessary to allow them to be connected to a sealed central heating system. Refer to Figure 8 for a typical system design, which incorporates radiators, and a drain facility that must be provided at the lowest point in the system to allow complete drain down.

b) The installation should be designed to operate with a flow temperature of up to 95°C.

c) A sealed system must only be filled by a competent person.

d) The available pump head for the appliances are given in Figure 6.

e) If thermostatic radiator valves are fitted, a radiator must be fitted with two lock shield valves, to enable correct operation of the pump over-run facility.

f) The following paragraphs outline the specifications of the items fitted to the appliances.

PUMP – The available pump head shown in Figure 6 is that in excess of the appliance hydraulic resistance, i.e. that available for the system.

6 AVAILABLE PUMP HEADS

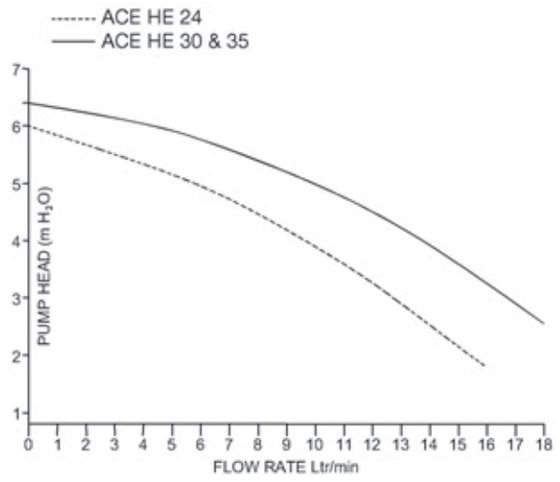

EXPANSION VESSEL – The integral expansion vessel is pre-charged to a pressure of between 0.5 and 1.0 bar. This should be checked before the water system is filled. Details below show the water system volume that is acceptable for this vessel. If the system water volume is larger then an additional vessel must be fitted to the system. BS 5449 and BS 6798 give further details regarding expansion vessel sizing and sealed systems.

Expansion Vessel Requirements

Vessel charge and initial system pressure	bar	0.5	0.75	1.0	1.5
Total water content of system using 8 L (1.54 gal) capacity expansion vessel supplied with appliance.	L	96	84	73	50
For systems having a larger capacity multiply the total system capacity in litres (gallons) by these factors to obtain the total minimum expansion vessel capacity required in litres.		0.0833	0.093	0.109	0.156

PRESSURE GAUGE – A pressure gauge is situated on the appliance control panel.

PRESSURE RELIEF VALVE – A pressure relief valve set to 3 bar (43.5 psi) is supplied with the appliance, however it will start to open at approximately 2.7 bar. It should not be used to flush the system.

FILLING LOOP - This boiler is not fitted with a filling loop. Any filling loop being fitted should comply with the current water supply (water fittings) regulations. A filling loop should be fitted at some point to allow the CH system to be filled.
Two types are shown in Figure 7.

WATER TREATMENT, CLEANSING AND FLUSHING THE HEATING SYSTEM

NOTE: *British Standard BS7593: 1992 stresses the importance of cleansing and flushing of the system to ensure it continues to run efficiently with the minimum of maintenance necessary. Halstead Boilers fully support this professional approach and recommend that the system is cleansed with an effective chemical cleanser and protected long term with a suitable inhibitor. Such products are available from Fernox and Sentinal.*

7 METHODS OF FILLING A SEALED SYSTEM

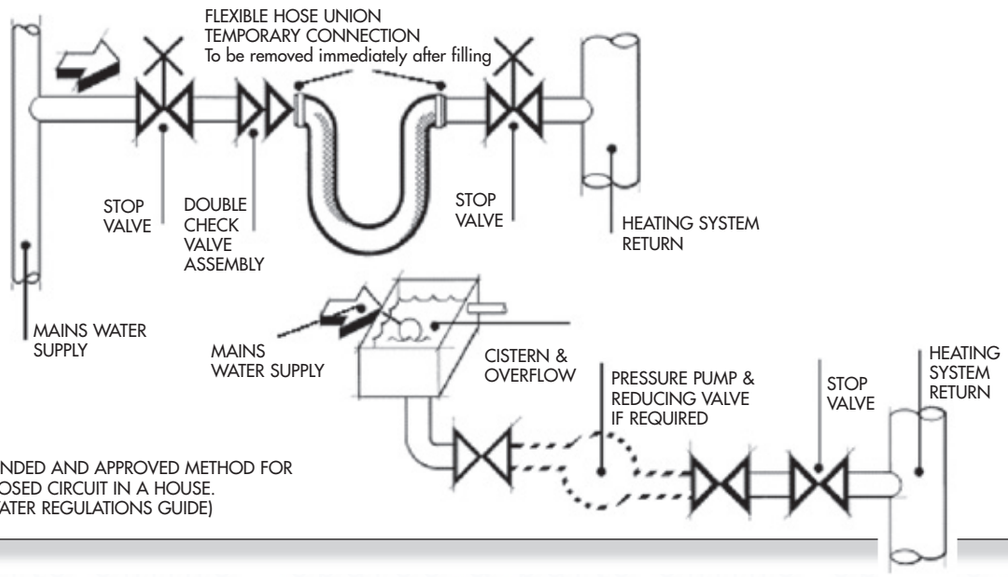

RECOMMENDED AND APPROVED METHOD FOR FILLING CLOSED CIRCUIT IN A HOUSE.
(R24-2a WATER REGULATIONS GUIDE)

CONTROLS. As a minimum it is recommended that a room thermostat be installed to control the appliance. Thermostatic radiator valves may be fitted to the system, however they must not be fitted in the room where the room thermostat is fitted. There must be at least one radiator installed with lock shield valves that should not be closed. Further guidance can be obtained from the Domestic Heating and Hot Water Guide to the building regulations.

3.8 DOMESTIC HOT WATER SYSTEM

a) Check that the mains water pressure is sufficient (as stated in 2.2 "Performance Data") to produce the required DHW flow rate, but does not exceed the maximum DHW pressure (10 bar). If necessary, a pressure-reducing valve must be fitted to the mains supply before the DHW inlet connection.

b) The final 600 mm (24 in) of the mains supply pipe to the boiler must be copper.

c) Avoid long DHW pipe runs and several hot water draw off points.

d) Insulate the hot water pipes if accessible to minimise the heat losses within the pipes to keep the water hot longer.

e) A domestic hot water flow regulator is fitted within the appliance to control the maximum water flow rate. This may be removed to obtain higher flow rates. Higher flow rates will not damage the appliance but may reduce the water temperature below an acceptable level. (Refer to Figure 28).

DOMESTIC HOT / COLD WATER SUPPLY TAPS AND MIXING TAPS. All equipment designed for use at mains water pressure is suitable.

SHOWERS & BIDETS. Any mains pressure shower or bidet complying with the Local Water Undertaking byelaws is suitable.

3.9 ELECTRICITY SUPPLY

a) Wiring external to the appliance must be in accordance with the current I.E.E Wiring regulations (BS 7671) for electrical installation and any local regulations, which apply.

b) The mains cable must be at least 0.75 mm2 (24/0.2 mm) PVC insulated to BS 6500 table 16.

c) THIS APPLIANCE MUST BE EARTHED. Failure to provide a satisfactory earth connection will result in appliance malfunction.

d) The method of connection to the mains supply must facilitate complete electrical isolation of the appliance. Either a 3A fused three pin plug and un-switched shuttered socket outlet, both complying with BS 1363, or a 3A fused double pole switch having a 3 mm contact separation in both poles and serving only the boiler (and its external controls) may be used.

3.10 EXTERNAL CONTROLS

The Ace HE appliances may be used with any certified mains voltage room thermostat, as described in section 4. For further information contact: Halstead Boilers Ltd, Service Helpline: 08450 710780.

8

TYPICAL SYSTEM DESIGN

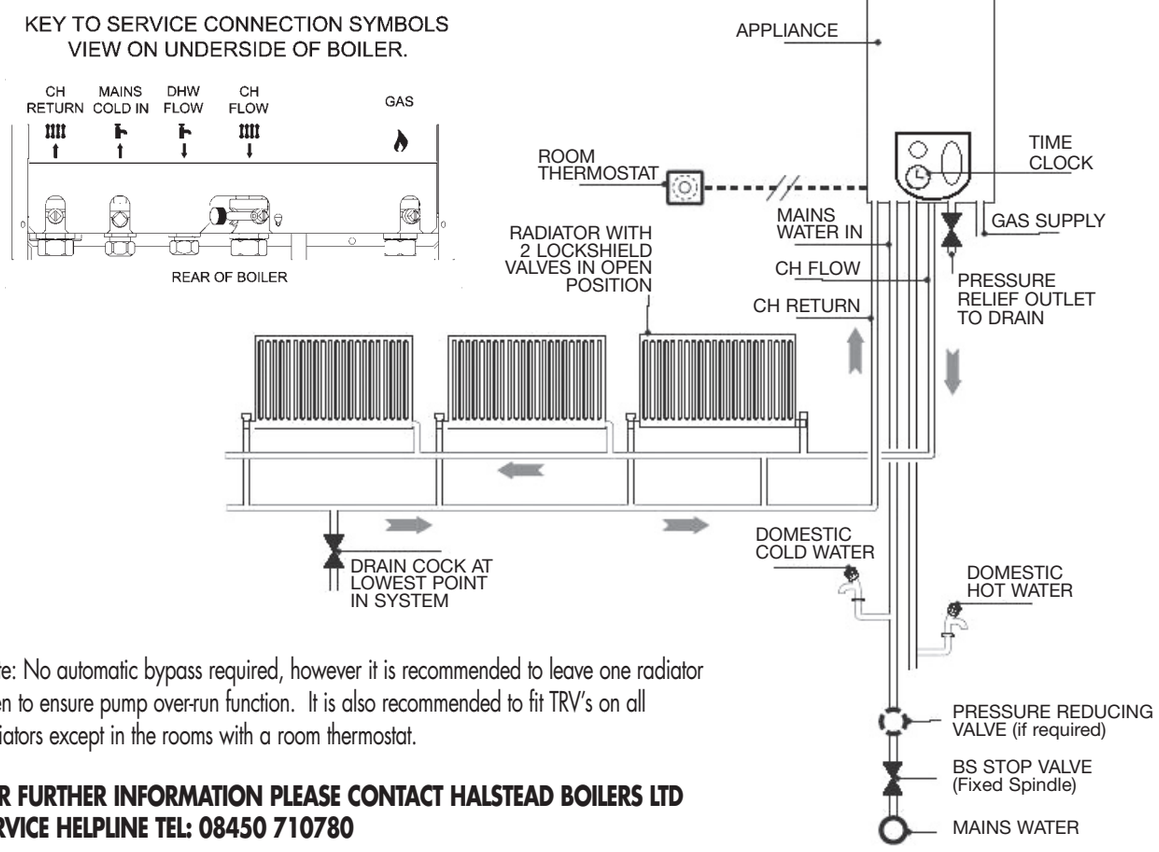

Note: No automatic bypass required, however it is recommended to leave one radiator open to ensure pump over-run function. It is also recommended to fit TRV's on all radiators except in the rooms with a room thermostat.

FOR FURTHER INFORMATION PLEASE CONTACT HALSTEAD BOILERS LTD SERVICE HELPLINE TEL: 08450 710780

4 APPLIANCE INSTALLATION

Before installing the appliance, check that the chosen location is suitable (section 3.2) and that the requirements for flue position (section 3.3) and minimum clearances (Figure 1b) are satisfied.

4.1 UNPACKING THE APPLIANCE

The appliance is supplied in one box. Flue kits are provided separately, the various flue kits available as described in sections 2.5 - 2.7. If the appliance is to be installed without access to an external wall, a wall liner kit is also required.

Unpack the boxes and check the contents:

- Complete appliance
- Paper wall mounting template
- Wall mounting plate
- Case Base
- Installation and Servicing Instruction
- User's Instructions
- Hardware pack containing:

  6 x 65 mm wood screws – 2 off
  Blue wall plugs – 2 off
  15mm flanged nuts – 3 off
  15mm Male flanged nut – 1 off
  15mm Olives – 4 off
  22mm flanged nuts – 2 off
  22mm Olives – 2 off

Manual Handling Note: During the appliance installation it will be necessary to employ caution and assistance whilst lifting, as the appliance exceeds the recommended weight for a one-man lift. Take care to avoid trip hazards, slippery or wet surfaces.

4.2 PREPARING THE WALL

a) Fix the paper template in the required position (ensuring that the necessary clearances are achieved). Ensure squareness by hanging a plumb line.

b) Mark the position of the largest wall fixing holes.
Refer to Figures 9 & 10.

c) Mark the position of the flue outlet. For side flue installation extend the flue centre line on to the sidewall, where the flue length exceeds 775 mm, a flue slope angle of 2.5° needs to be taken into account. Refer to Figure 10. Remove the paper template.

d) Cut the hole in the wall for the air/flue duct (preferably with a core-boring tool). The hole must be horizontal and not be less than 100 mm in diameter. If the hole is not accessible from outside, its minimum diameter must be sufficient to allow insertion of the wall liner (130 mm, 5 in). The wall liner is available as an optional extra and must be sealed in position with mortar (or equivalent).

e) Drill the two largest fixing holes using a 10mm drill and insert the blue wall plugs provided. (Further holes can then be drilled should additional support be required for the boiler. Screws and wall plugs are not supplied for this)

f) Hang the wall mounting plate using the two large fixing screws supplied, ensuring that it is level. Refer to Figure 10.

g) Fit any additional fixing screws into wall plugs and tighten all screws.

As standard the pipe work may only be routed from below.

Note: *Once the appliance has been installed and all Gas and Water connections have been made, the case base MUST be fitted on the underside of the boiler. Instructions are provided on the base panel.*

WALL MOUNTING PLATE

9

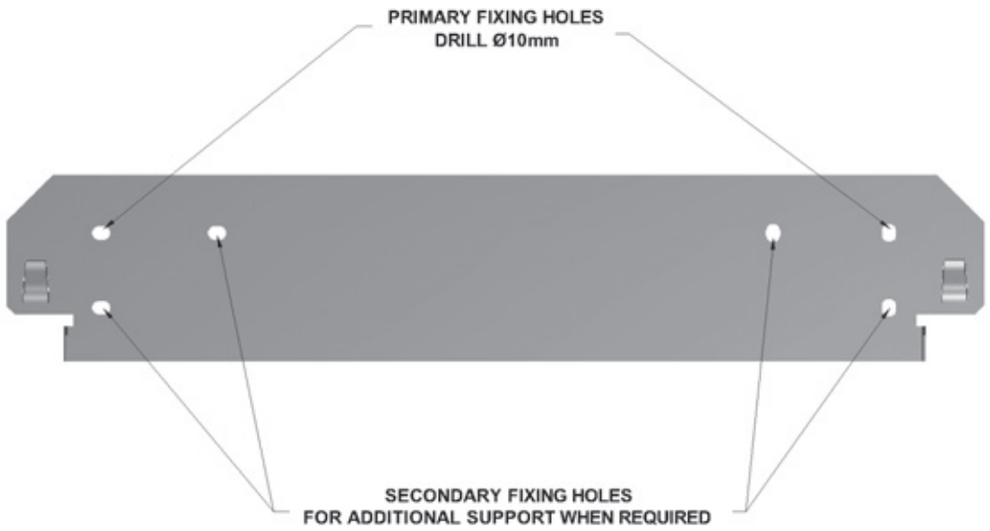

10

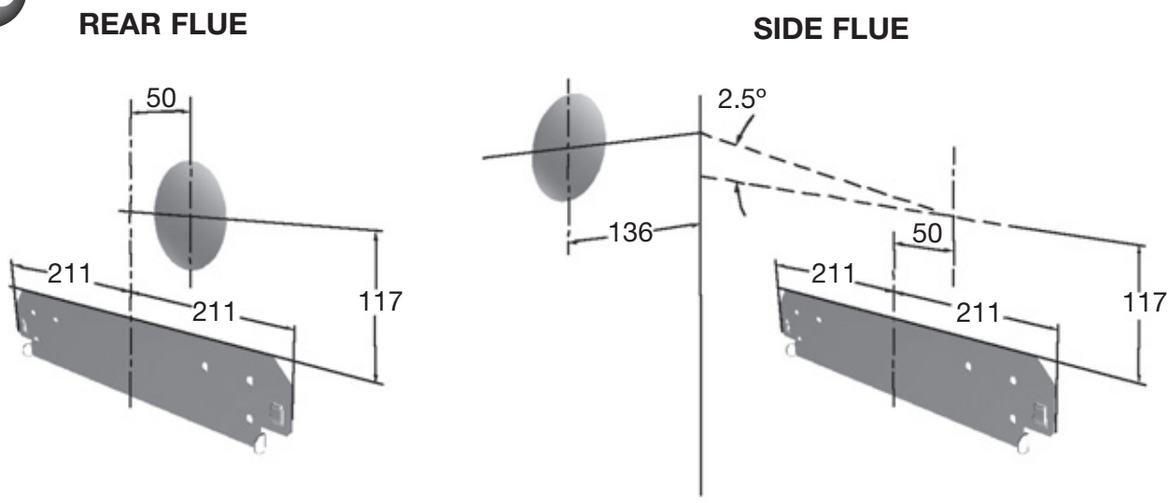

4.3 MOUNTING THE APPLIANCE

Lift the appliance into position as shown in Figure 11. Position the top of the appliance approximately 20mm above the top of the wall mounting plate and use the side wings on the plate to locate the appliance in a horizontal direction. Then carefully lower the appliance, ensuring that the two top locating tabs are securely engaged.

11 **MOUNTING THE APPLIANCE**

4.4 CENTRAL HEATING & DOMESTIC HOT WATER SERVICE CONNECTIONS

Refer to Figures 8 & 12.

a) Connect the central heating system pipes to the central heating flow and return valves, using 22mm pipe work.

b) Connect the mains water supply to the DHW inlet isolating valve.

c) Connect the DHW supply pipe to the DHW outlet connection.

Fill the central heating system and domestic hot water system, as described in section 5.1, and then proceed to Section 4.5.

12 **VIEW OF CONNECTIONS ON REAR OF BOILER**

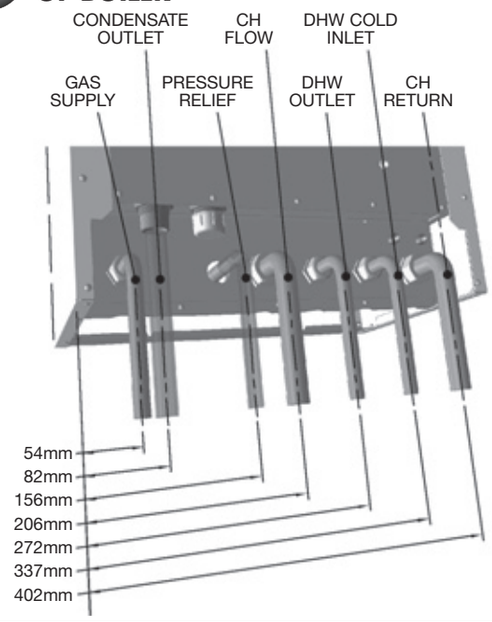

4.5 GAS CONNECTION

Refer to Figures 8 & 12.

Connect the gas supply pipe to the gas service cock using 15mm copper pipe and the 15mm nut and olive supplied. Within 1000mm of the gas service cock it is recommended that the pipe diameter is stepped up to a minimum of 22mm diameter copper pipe.

For full rate, operate appliance in DHW mode.

4.6 CONDENSATE CONNECTION

Refer to Figure 13

Connect preferably a 22 mm plastic push fit or adhesive overflow pipe to the condensate outlet. It should be piped to drain, preferably within the building, maintaining a continuous 2° fall away from the appliance. Note; if an additional "U" trap is fitted between the appliance and the discharge point, then a visible air break is necessary between the appliance and trap, because a trap is already provided within the appliance. 32 mm pipe should be used for external pipe work, or if the appliance is installed in a garage. If the drain is routed externally to a drain or soak away, then the external length should be kept as short as possible and not exceed 3000 mm. Protection from freezing in cold weather conditions is also advisable. Ensure that the condensate discharge system complies with any local regulations in force.

The drain pipe material should be resistant to acid with a pH less than 6.5. Suitable materials for the condensate drainage pipe are PVC, UPVC, ABS, PP or PVC-C.

In exceptional circumstances, such as when a boiler is installed in a basement without drainage, it may be necessary to install a condensate pump to carry condensate up to ground/drain level. Such products are available from Grundfos Pumps Ltd on: 01525 850000 and Pump House on: 0115 922 2211.

13

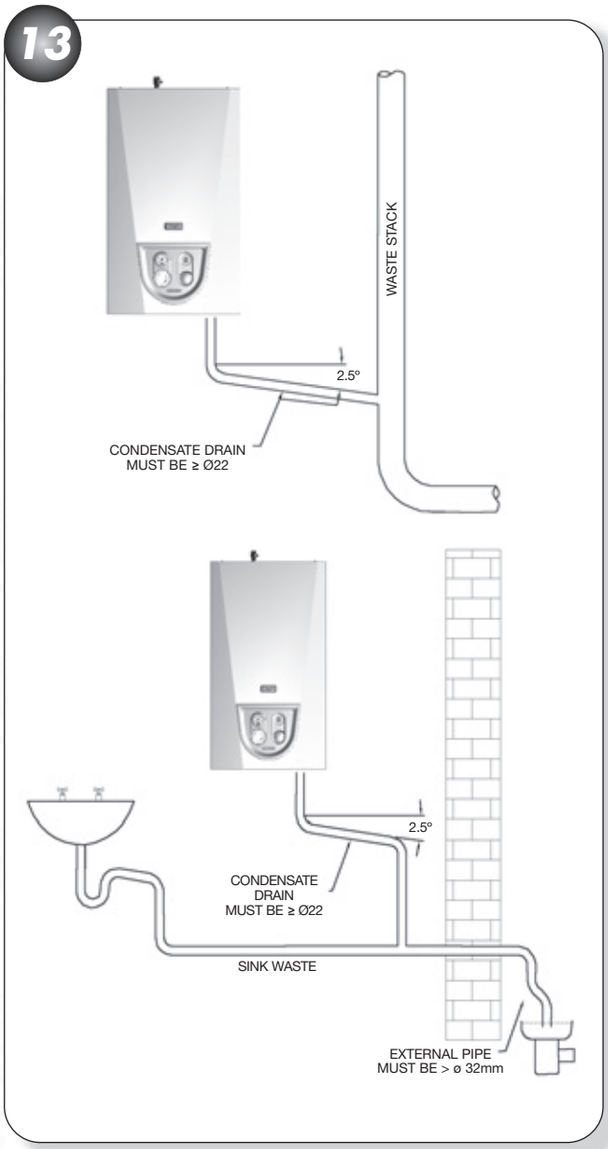

4.7 PRESSURE RELIEF VALVE CONNECTION

The safety valve is located at the bottom RHS of the appliance. Connect 15mm copper pipe using the male flanged nut and olive provided, to the safety valve outlet, and then continue the discharge pipe using no less than 15mm diameter copper pipe to the outlet. The pipe outlet should be positioned so that the discharge of water or steam can be noticed, but cannot create a hazard to the occupants of the premises or damage electrical components or wiring.

4.8 AIR / FLUE DUCT INSTALLATION

For correct flue installation please refer to the installation instructions that are provided with the individual flue kit as described in sections 2.5 – 2.7.

a) Measure the required flue length as shown in Figure 14. Refer to section 2.5 to determine whether any extension kits are required. Installations using only the standard ducts or standard ducts with straight extensions are described in this section. Installation instructions for all other flue systems are included in the various flue kits.

b) Ensure that all (inner and outer tube) sealing rings are provided and assemble the air/flue ducts as shown in the flue instructions.

c) Construct the correct flue length by building the flue out from the appliance.

Ensure that the flue and air seals are correctly fitted before assembly and that each section is fully engaged.

The flue length is measured from the centreline of the appliance flue outlet to the inside of the external wall-sealing ring. In most cases it will be possible to achieve the required flue length without cutting the ducts, however where necessary the plain ends of the extension ducts may be cut. Never cut the swaged end, and always ensure that the cut is square and free of burrs or debris.

NOTE IT IS ESSENTIAL THAT THE TERMINAL IS FITTED THE CORRECT WAY UP
See flue kit Instructions (i.e. rain shield at the top).

14

MEASURING THE EXACT FLUE LENGTH

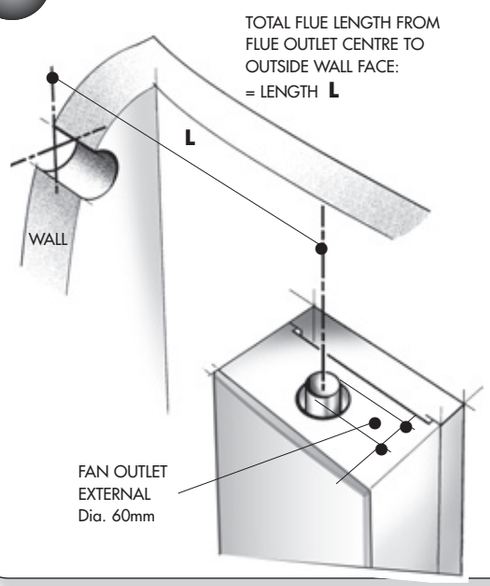

4.8.1 INSTALLING THE AIR/FLUE DUCT FROM INSIDE THE ROOM

Wall thickness up to 800 mm (31 in) only.

a) Push the terminal through the wall liner taking care to ensure that the terminal is the correct way round and the external wall-sealing ring does not become dislodged.

b) Assemble the flue system extension ducts as necessary, referring to Figure 15.

c) Pull the flue system towards the appliance to seat the external sealing ring against the outside wall, ensuring that the duct joints are not disturbed.

d) Use the internal sealing ring to make good the internal hole, and check that the terminal is correctly located on the outside wall (Where possible this should be visually checked from outside the building.) Figure 15 shows a view of the flue system, correctly installed.

e) Finally locate and secure the elbow to the appliance using the four screws provided.

4.8.2 INSTALLING THE AIR/FLUE DUCT FROM OUTSIDE THE BUILDING

(Flue hole diameter 100 mm – wall liner not necessary)

a) Secure the flue elbow with seal to the appliance using 4 screws.

b) Fit external wall sealing ring over flue and then from outside the building, push the flue system through the wall taking care to ensure that the terminal is the correct way around.

c) Loosely fit the internal wall sealing ring over the inside end of the flue.

d) Assemble the flue system extension ducts as necessary, referring to the flue kit instructions, and fit to the flue elbow.

e) Fit the flue terminal to the flue system, ensuring that the duct joints are not disturbed, and that the external sealing ring is seated against the outside wall.

f) Finally use the internal sealing ring to make good the internal hole. Check that the external wall sealing ring and the terminal is correctly located, on the outside wall from outside the building.

15 **INSTALLING THE FLUE SYSTEM FROM INSIDE THE ROOM**

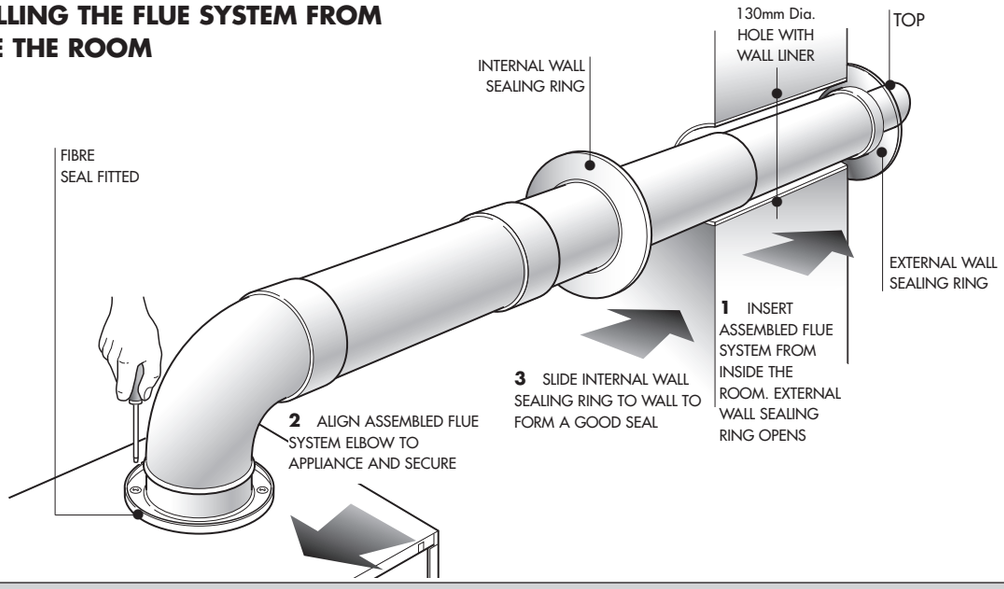

4.9 ELECTRICAL CONNECTIONS

Connect the electricity supply and external controls (using suitable mains cable) as follows:

Wire the cable(s) into the appropriate connections in the electrical plug provided, referring to Figure 16. Live supply to L1, Neutral and Earth as indicated. Check that L2 and L3 are linked.

To provide correct cable retention, fit the cable through the clamping arrangement. The cable will be held in position as the clamp is screwed into place.

If a programmer/room thermostat is to be fitted remove the red link between L2 and L3 and connect the device across these terminals. Any external controls fitted must be rated at 230V 50Hz and have volt free contacts.

L1 = Permanent Live
L2 = External Stat out
L3 = External Stat in (Switched Live)
N = Neutral
⏚ = Earth

16

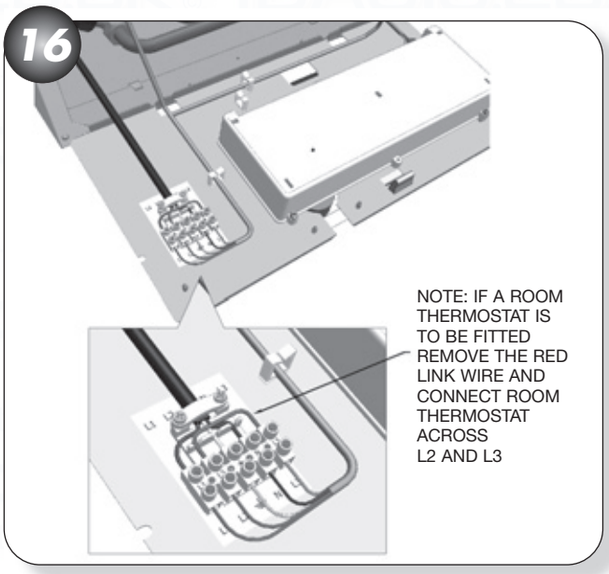

5 COMMISSIONING & TESTING

5.1 FILLING THE WATER SYSTEM

Before commissioning the appliance, the whole gas installation including the meter **MUST** be purged and tested for gas tightness in accordance with BS 6891: 1998.

*Open all doors and windows, extinguish naked lights, and **DO NOT SMOKE** whilst purging the gas line.*

Before commencing the commissioning procedure, ensure that the gas service cock is turned on, the electricity supply is isolated, and that the CH and DHW pipe-work is complete. Fill the water systems by following the procedure detailed below steps 1 to 5, and referring to Figure 17.

It is recommended, where possible, to flush the CH system without the appliance connected, to avoid debris and flux blocking the waterways within the appliance.

17

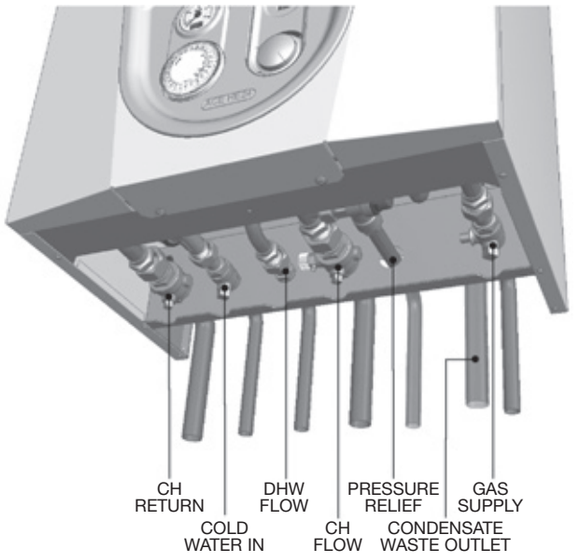

1) Check that the CH flow and return valves are in the open position.

2) Fill the system with water using one of the approved methods described in section 3.7 to about 2.0 bar. Vent the system via the radiator valves and system air vents in accordance with normal practice. Ensure that all system air vents are closed.

3) Check the system for soundness.

4) Check the operation of the pressure relief valve (Figure 18) by pulling the lever out gently to ease the valve of its seat. Checking that water is discharged, release the lever and ensure that the valve seats correctly and does not leak.

5) Drain the entire system using the manual drain valve to flush out any debris, and refill to 0.2 bar above the system design pressure (between 0.5 and 1.0 bar) by repeating the above procedure. Follow the commissioning procedure described below, and then repeat this instruction with the system hot. It is recommended that the system is cleaned with a recognised system cleaner such as Fernox or Sentinel.

6) Open the DHW inlet valve and open and close each hot water tap in turn to clear all the air from the pipes and the appliance.

7) Remove the pump cap; use a screwdriver to rotate the pump shaft. Replace the cap.

8) If a filling loop has been used, disconnect filling loop.

9) Prior to lighting the appliance check that the gas inlet pressure measured at the appliance inlet pressure test point is >20±1 mbar for natural gas. (as described in section 5.2 b), the central heating system should also be checked for circulation by operating the appliance with the gas turned off, this is to ensure that no air locks occur. The appliance may go into ignition lockout and require resetting (see section 5.5).

To aid venting, a manual air vent is provided on the top LHS of the appliance, and an automatic air vent on the pump assembly

Do not use the pressure relief valve to drain the system, because dirt or debris could prevent the valve seating correctly. If the valve leaks or sticks closed, then replace it.

To drain the system, open the manual drain on the side of the CH flow cock shown in figure 18.

18

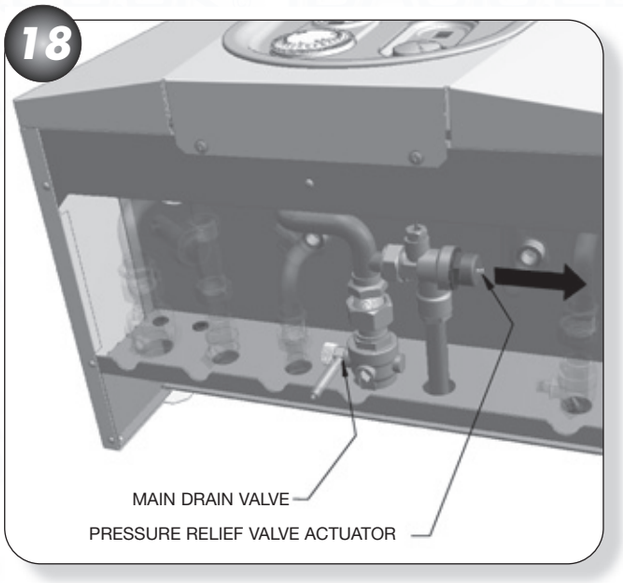

5.2 COMMISSIONING THE APPLIANCE

If, at any time during the commissioning procedure, it is required to prevent the appliance from modulating, set the control knob to the Service position (fully clockwise).

Refer to Figures 19 & 20

a) Check that the gas supply is turned ON and the gas service cock is OPEN.

b) Slacken the screw in the gas cock inlet pressure test point and connect a suitable manometer. Refer to Figure 20.

c) Turn the control knob fully anticlockwise to the standby position.

d) Switch on the electrical supply. The display reads 'o'.

e) Turn the control knob to the desired temperature position and fully open any DHW tap. The fan should start and after a few seconds ignition will commence.

f) If the burner fails to light the fan will stop. Initially this may be due to air in the gas supply line. The boiler will automatically have five attempts at ignition. It may be necessary to turn the control knob fully anti-clockwise to the reset/Standby position and repeat (d). (See section 5.4).

g) When the boiler has lit the display will show 'H.' Allow the appliance to run for at least 10 minutes and check that the gas supply pressure measured at the appliance inlet pressure test point is 20 ± 1 mbar for natural gas.

h) Close the DHW tap and ensure that the burner goes out (the display reads 'o') and the pump stops after an over-run period of 5 minutes.

i) Ensure that the room thermostat (if fitted) is calling for heat. Turn the clock override switch to the 'I' position. The ignition sequence will commence and when flame is detected the display will show 'C.'

j) Set the clock to the desired times by setting the tabs.

k) Slide the clock override switch to the 'timed' position and check the operation of the clock and room thermostat (if fitted).

If the gas inlet pressure is outside the required value check that the gas pipe is of the correct diameter or contact the gas provider to adjust the gas meter governor.

THIS BOILER IS FACTORY SET, SO THAT NO COMBUSTION OR GAS INLET RATE CHECK IS REQUIRED. HOWEVER IF THE APPLIANCE FAILS TO OPERATE CORRECTLY CONTACT THE HALSTEAD BOILERS LTD SERVICE HELPLINE: 08450 710780.
IF A COMBUSTION & GAS INLET RATE CHECK IS TO BE CARRIED OUT THEN REFER TO SECTION 6.1

19

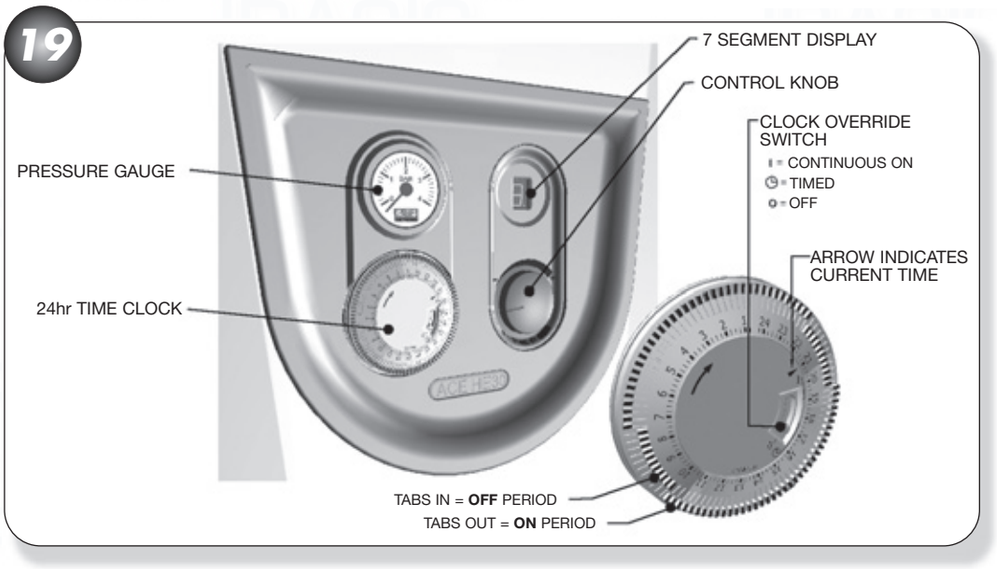

20

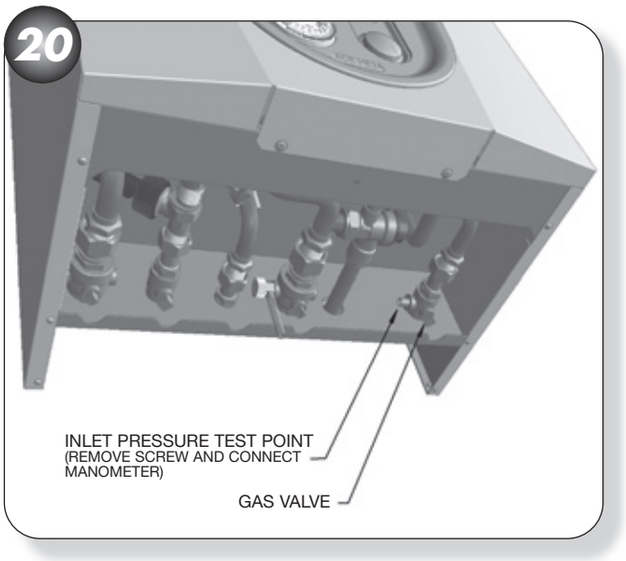

5.3 DHW FLOW RATE

A flow regulator is supplied factory fitted to the appliance to ensure that no adjustment is necessary. Should the mains flow rate be below the minimum required, it is possible to remove the flow regulator from the appliance as instructed in section 9. The nominal pre-adjusted flow rate may vary by ± 5 % due to factory tolerances and mains water pressure fluctuation.

5.4 FINAL CHECKS

a) Turn the control knob to standby.

b) Remove the manometer and tighten the appliance inlet pressure test point screw. Re-light the burner and test for gas tightness.

c) Fit the appliance front casing as illustrated in Figure 21 using locating lugs at the top and screws underneath.

d) Set the heating and hot water control to the required setting. Ensure that the clock override switch is in the timed position and check that the time clock is set at the desired time periods. Set the room thermostat (if fitted) to the required setting.

21

5.5 LOCKOUT INDICATION AND RESET THE APPLIANCE

In the event of failure during an ignition sequence, (5 attempts), the Digital display shows fault code '3'. In order to reset the boiler, turn the control knob anticlockwise to 'STANDBY' position and then back to 'ON' within **two** seconds.

5.6 FROST PROTECTION

The appliance is fitted with a frost protection device. In the event of very cold conditions, the pump may operate and the appliance light for a few minutes to protect the appliance and system from potential frost damage. This can only function if the gas and electricity supplies are maintained and the appliance is left ON. The time clock can be switched to the OFF setting.

5.7 OVERHEAT PROTECTION

The appliance incorporates flow and return thermistors, which monitor the appliance's operating temperature. Abnormal temperatures will cause the appliance to go to lockout and the LED display will show code '1'.

Allow the appliance to cool and turn the CH Temperature Control knob fully anti-clockwise to the reset position to clear.

5.8 OTHER FEATURES

The following additional features are included in the appliance specification:

When the appliance cycles on its central heating control thermostat, a slow cycle device operates. The timer (set to 5 minutes) is activated after the end of each burn cycle to prevent rapid cycling of the burner.

ANTI PUMP SEIZURE DEVICE:
Providing that a power supply is maintained, the pump will operate for at least 20 seconds in every 23 hours (regardless of heat demand) to prevent pump seizure during periods where the appliance is not used.

CH SOFT START DEVICE:
After every burner start, in CH mode, the burner output stays at low for 10 seconds, to ensure smooth heat up of the system and maximum efficiency.

KEEP-HOT FACILITY:
This feature is designed to provide hot water very quickly without wasting too much water. Therefore you may notice that after EVERY hot water draw-off the burner may stay on for a short period of a few seconds. This is to pre-heat the hot water circuit and prepare the appliance for the next hot water draw-off.

SUMMER MODE:
To avoid resetting the control knob temperature to 'standby' in summer when CH is not required, switch the clock over-ride switch to the **OFF** position.

SERVICE MODE:
The appliance enters the SERVICE mode by turning the control knob to 'SERVICE' (full clockwise). The LED displays a flashing 'C'. In this mode the appliance runs at the minimum CH output. This mode allows the gas valve offset and CO_2 emissions to be measured. To increase the output to maximum turn the control knob back on and return to Service within two seconds.

5.9 USERS INSTRUCTIONS

Upon completion of commissioning and testing the system, the installer must instruct the user in how to operate the appliance by drawing the user's attention to the following.

a) Give the 'Users Instructions' to the householder and emphasise their responsibilities under the 'Gas Safety (Installation and Use) Regulations or rules in force.

b) Explain and demonstrate the lighting and shutdown procedures.

c) Advise the householder on the efficient use of the system, including the use and adjustment of all system controls for both CH and DHW.

d) Advise the user of the precautions necessary to prevent damage to the system, and to the building, in the event of the system remaining inoperative during frost conditions.

e) Explain the function of the control knob, and how to reset the appliance. Emphasise that if cut-outs persists, the appliance should be turned off and the installer or service engineer consulted.

f) Stress the importance of an annual service by a registered heating engineer.

g) The electrical mains supply to the appliance must remain ON for the frost protection circuit to operate.

5.10 APPLIANCE LOG BOOK

A logbook is supplied in the back of this manual to record installation and commissioning details and to make future servicing of the appliance easier.

This logbook forms part of the industry's Benchmark code of practice for the installation, commissioning and servicing of central heating systems.

Please ensure that the logbook is fully completed and left with the customer for future reference, along with Users Instructions and this Installation and Servicing Instruction manual.

spares & parts online IBASIS.CO.UK

6 ROUTINE SERVICING

To ensure continued efficient operation of the appliance, it is recommended that it is checked and serviced as necessary at regular intervals. The frequency of servicing will depend upon the particular installation conditions and usage, but in general once a year should be adequate. It is the law that a competent person, such as British Gas or other CORGI registered personnel, must carry out any service work.

Service the appliance by following the full procedure detailed below:

6.1 COMBUSTION CHECK

The appliance incorporates a flue sampling point on the appliance flue elbow, or appliance vertical flue adaptor. If suitable equipment to analyse the flue gas is available, remove the sampling cap and fit a 6 mm inside diameter sample tube.

Operate in DHW mode, at full rate. After ten minutes operation check the CO_2 values and CO/CO_2 ratio and compare with those figures stated in section 2.3. Do not forget to replace the sampling cap after use.

If the measured combustion values are significantly outside the figures stated in section 2.3 contact Halstead Boilers Ltd. Service Helpline: 08450 710780.

When the appliance is operating at maximum output check that the gas supply pressure is 20.0 mbar, using the inlet pressure test point is located on the gas supply cock.

Before commencing any service operation, ISOLATE the mains electrical supply, and TURN OFF the gas supply at the main service cock.

22

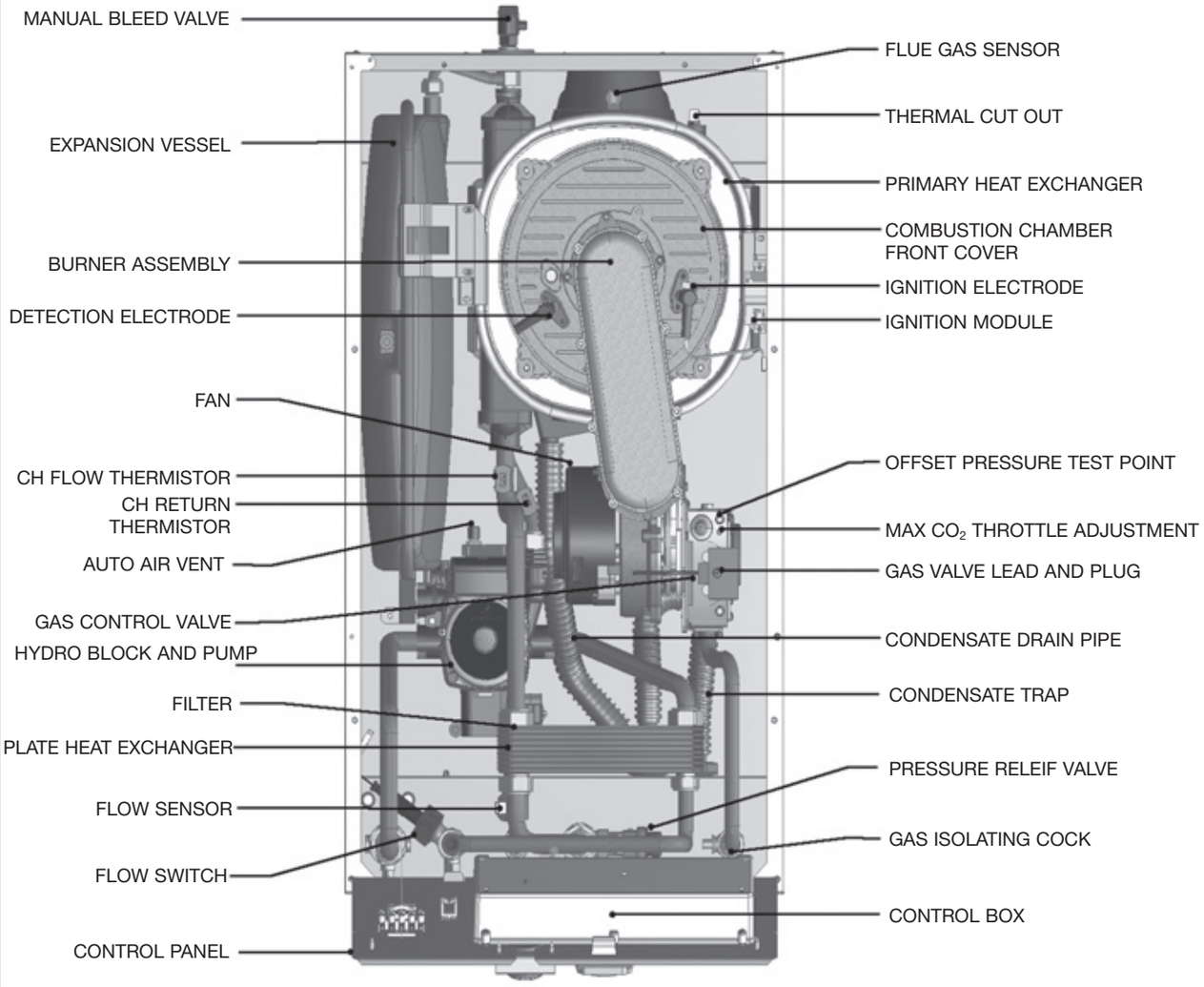

23

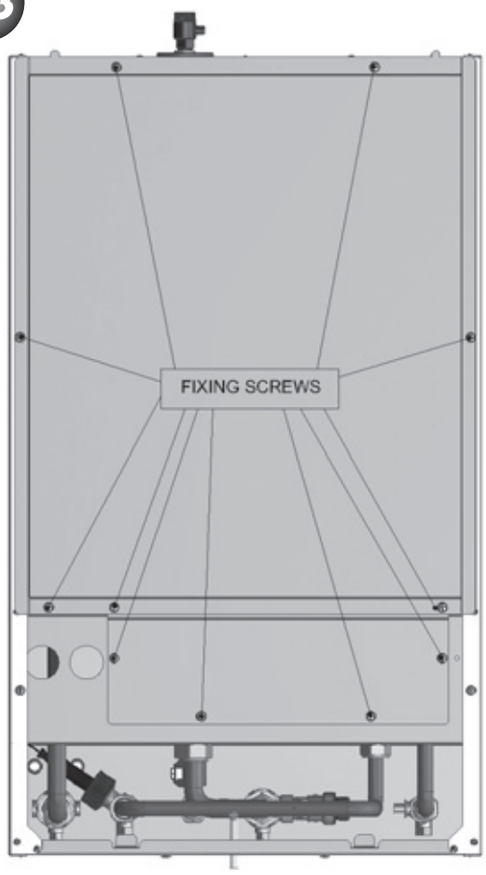

24

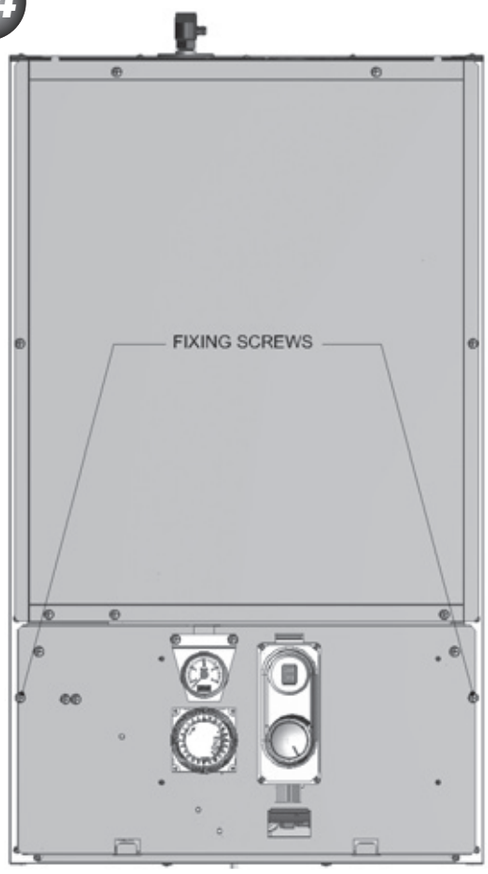

25

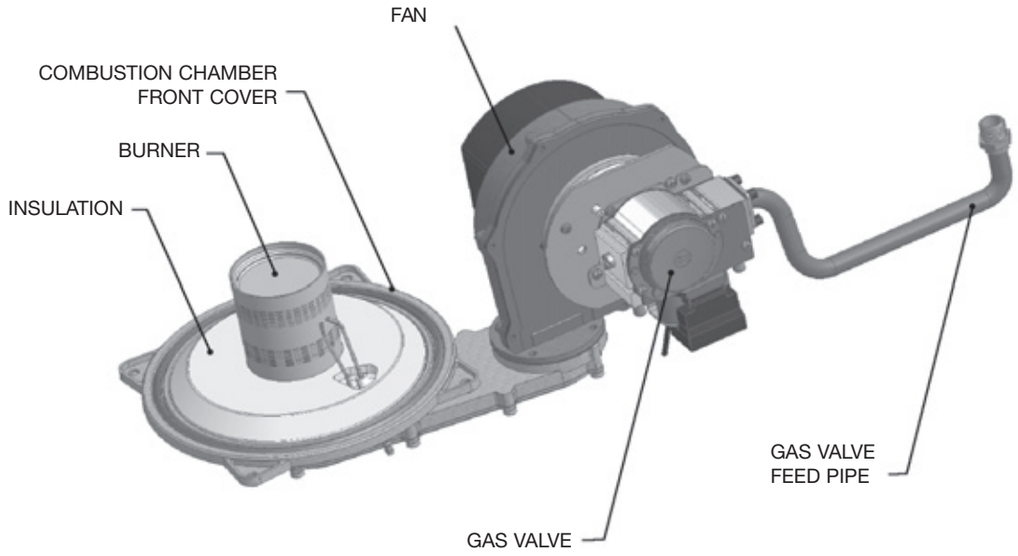

6.2 GAS CONTROL VALVE, FAN & BURNER ASSEMBLY

Refer to Figures 22, 23, 24, and 25

a) Remove the casing front panel, (2 screws) and lift off.

b) Lower the controls panel (2 screws).

c) Remove the sealed chamber front panel (7 screws).

d) Disconnect the ignitor plug, earth lead and detection plug from the ignitor and detection electrodes.

e) Unscrew the screw holding the gas valve lead plug, and disconnect the plug.

f) Disconnect the electrical leads from the fan (2 plugs).

g) Remove the base panel (1 screw).

h) Undo the nut holding the gas valve feed pipe to the gas isolating cock, and disconnect.

i) Disengage the gas valve feed pipe grommet from the casing by pushing it up.

j) Remove the 4 nuts holding the combustion chamber front cover in place.

k) Remove the gas control valve, fan & burner assembly, by carefully pulling forward the combustion chamber front and pivoting the assembly forward, then disengage the gas valve feed pipe from the casing, by lifting up the assembly. Take care not to damage the insulation.

l) The assembly may then be inspected. If the gas valve is to be replaced refer to section 9.3.

m) Re-assemble in reverse order.

6.3 BURNER

Inspect, and if necessary clean the main burner ports using a soft brush or vacuum cleaner. Do not use a wire brush or any abrasive material.

6.4 IGNITION & DETECTION ELECTRODES

a) Inspect the ignition and detection electrodes in situ. If necessary, clean using a soft brush. If either the electrode or the ceramic insulation shows signs of damage or wear, replace the electrode(s) and their gasket.

b) Check that the alignments of the ignition and detection electrodes are correct. Refer to Figure 26. Adjust by carefully bending the tip of the electrode rod whilst supporting the base of the rod. Do not put any pressure on the ceramic insulation.

26

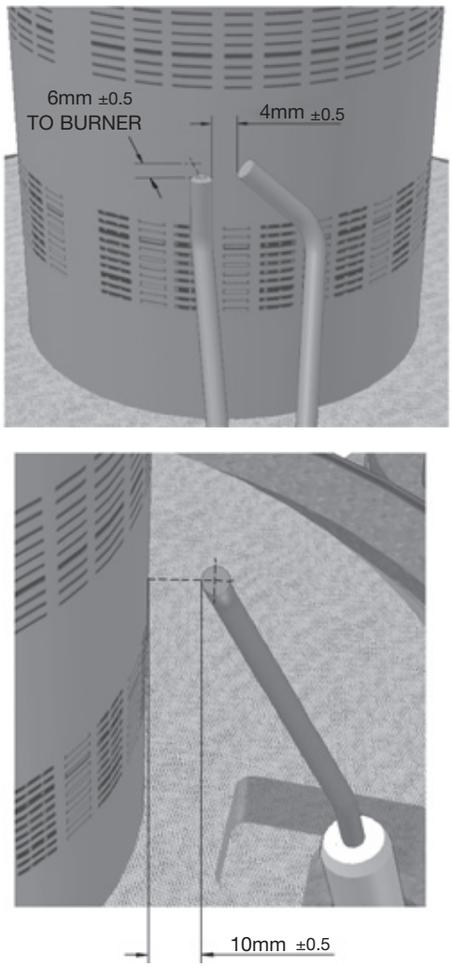

6.5 COMBUSTION CHAMBER & HEAT EXCHANGER

Inspect the inside of the combustion chamber for debris. If necessary, clean the inside of the tubes with a soft brush. Do not brush the insulation at the rear, check the integrity of the combustion chamber insulation panels, if damaged they will require replacement.

6.6 CONDENSATE DRAIN

The condensate Drain has a removable cap, Figure 27, which allows the removal of debris that may be caught within it. Place a bowl under the cap to catch the condensate and remove the cap. Any debris inside will be expelled at this point. Replace the cap ensuring a good seal is made. Discard the condensate and debris.

27

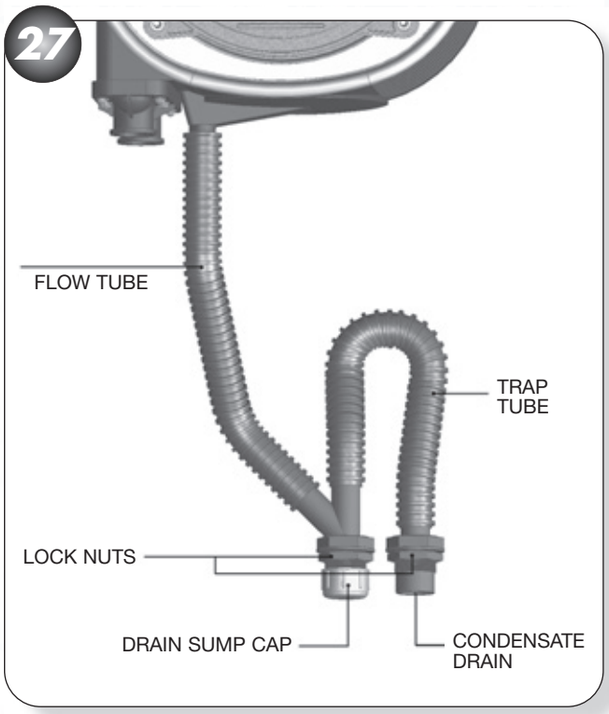

6.7 DOMESTIC COLD WATER INLET FILTER

Close the water inlet isolating cock, open a domestic hot water tap at the lowest point in the system and allow the pressure to dissipate. Close this tap again. Undo the nut holding the flow switch to the water inlet isolating cock to gain access. The filter can now be removed, and cleaned as necessary by flushing with water. Re-assemble in reverse order, ensuring all seals are replaced correctly.

28

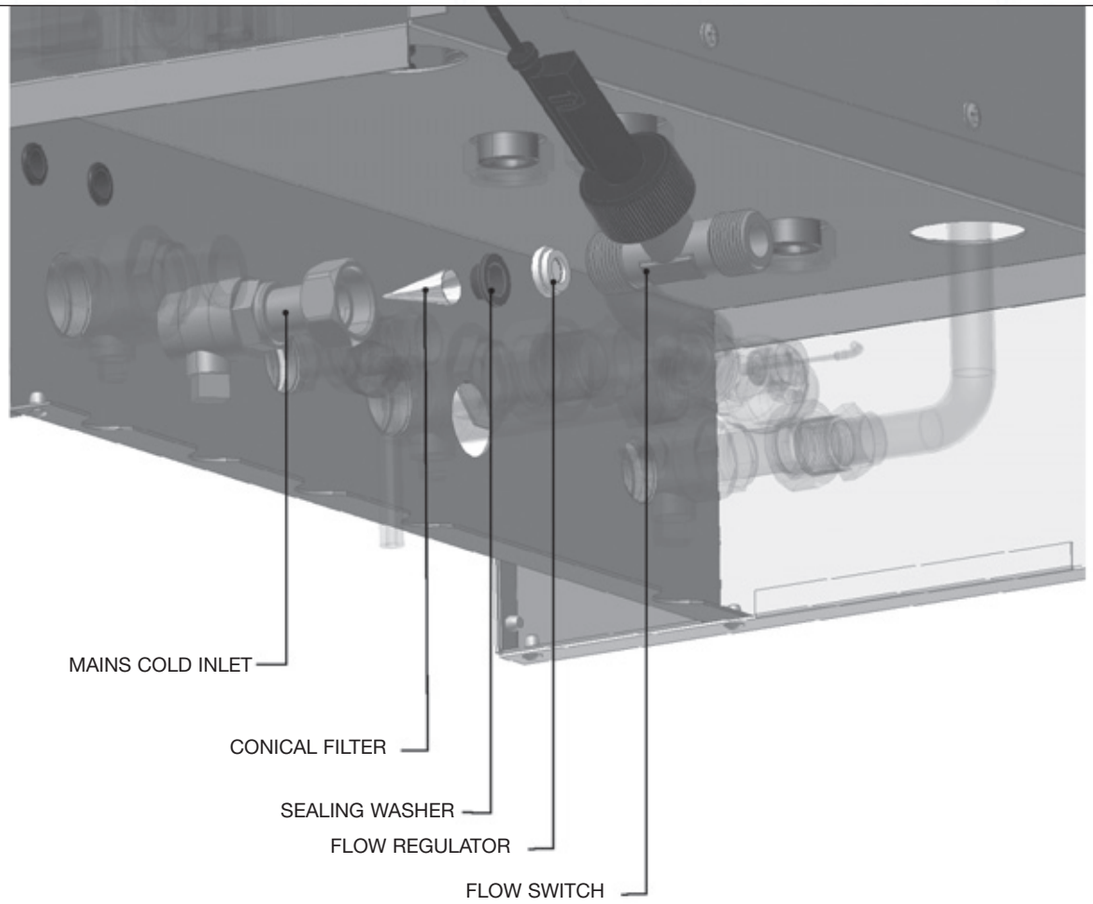

6.8 RE-ASSEMBLY & RE-COMMISSIONING

a) Re-assemble all components in reverse order.

b) Check that all joints and seals are correctly fitted.

c) Turn on the gas and electricity supply and light the appliance, as described in section 5.2.

d) Re-perform a combustion check, as described in section 6.1.

e) Check the operation of the appliance in both CH and DHW modes as applicable.

f) Remove the manometer and tighten the inlet pressure test point sealing screw.

g) Test for gas tightness.

6.9 FINAL CHECKS

a) Ensure the fascia panel is placed into the upright position and secure with the two screws.

b) Re-fit the front casing panel.

c) Return all appliance and external controls (if fitted) to their original settings.

7 INTERNAL WIRING DIAGRAM

7.1 : FUNCTIONAL FLOW WIRING DIAGRAM

29

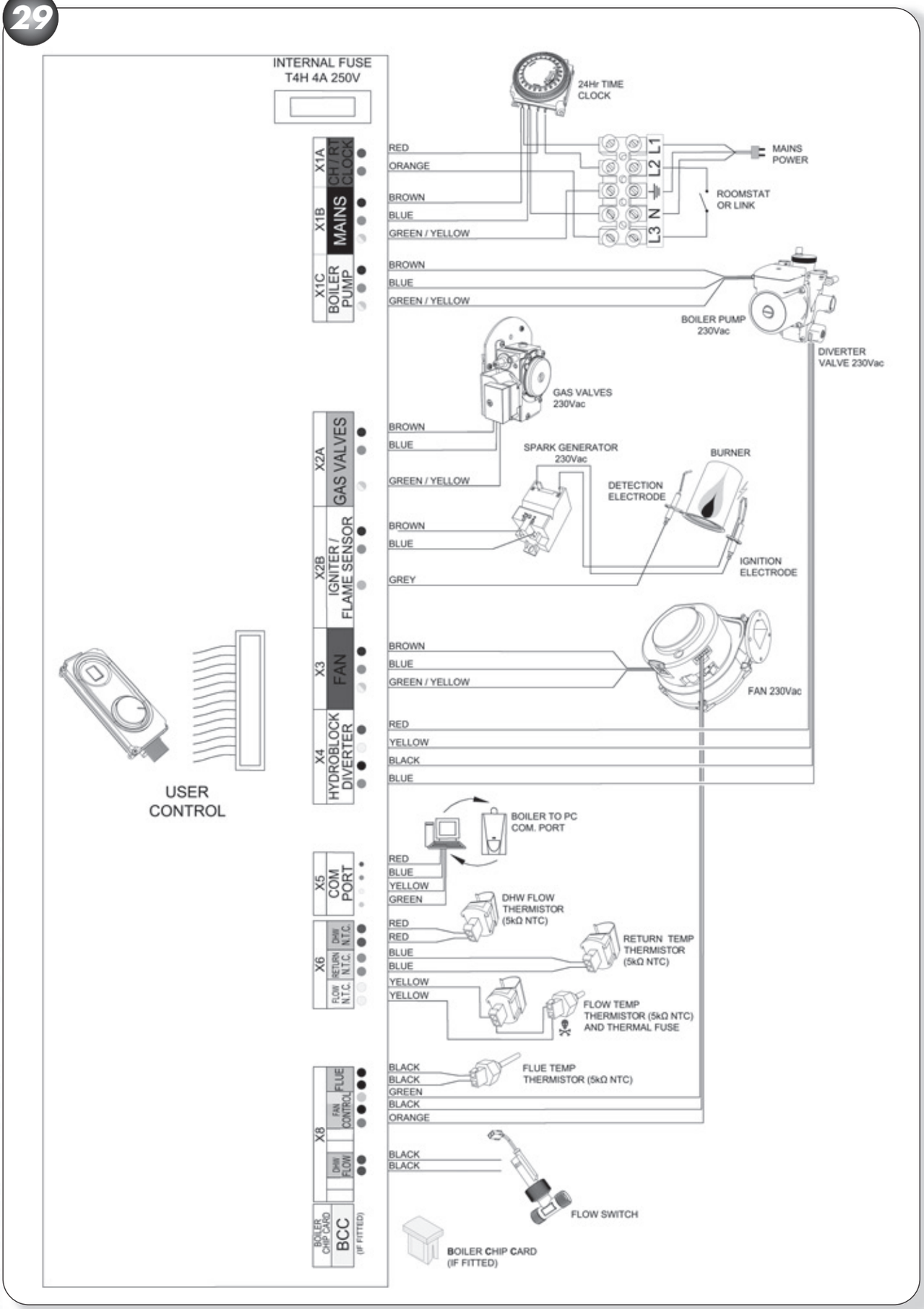

8 FAULT FINDING

8.1 GENERAL

Before looking for a fault condition, check that:

- The mains electrical supply is turned on.
- The room thermostat and clock (where fitted) are calling for heat. Radiators are bled and free of air.
- The gas service cock is open.
- The system is at design pressure.

Before attempting any electrical fault finding, always conduct the preliminary electrical system checks as described in the Instructions for the British Gas Multimeter, or other similar instrument.

On completion of any service or fault finding operation involving making or breaking electrical connections, always check for EARTH CONTINUITY, POLARITY and RESISTANCE TO EARTH.

Detailed procedures for replacing faulty components are described in section 9 (Parts Replacement).

For further information contact: Halstead Boilers Ltd. Service Help line: 08450 710780.

8.2 DIAGNOSTIC DIGITAL DISPLAY

FASCIA PANEL - Refer to Figure 31.

The Digital Display shows error code '3' in a lockout condition.

To RESET the boiler turn the control knob fully anti-clockwise to the RESET/STAND-BY position and then back to anywhere between the '+' and '–' within TWO seconds.

8.3 FAULT FINDING CODES

In the event of the appliance failing to light, refer to the Diagnostics Chart.

8.4 DHW FAULT FINDING

When the hot water tap is turned on, the control should perform a series of checks followed by an ignition sequence. Refer to section 5.2.

If the control has powered up correctly but does not respond to a DHW demand, check the following:

a) Check that the DHW flow rate at the tap is greater than 2.5 litres/minute.

b) Check the operation of the DHW flow switch, Figure 28.

c) Check the wires to the DHW flow switch.

d) Check connector X8 is correctly connected to the PCB.

e) Check for water in the CH system etc.

If DHW temperature fluctuates heavily during a long draw off, check the plate heat exchanger and the flow switch filters for debris, clean and replace, (refer to section 6.7 and 9.17).

30

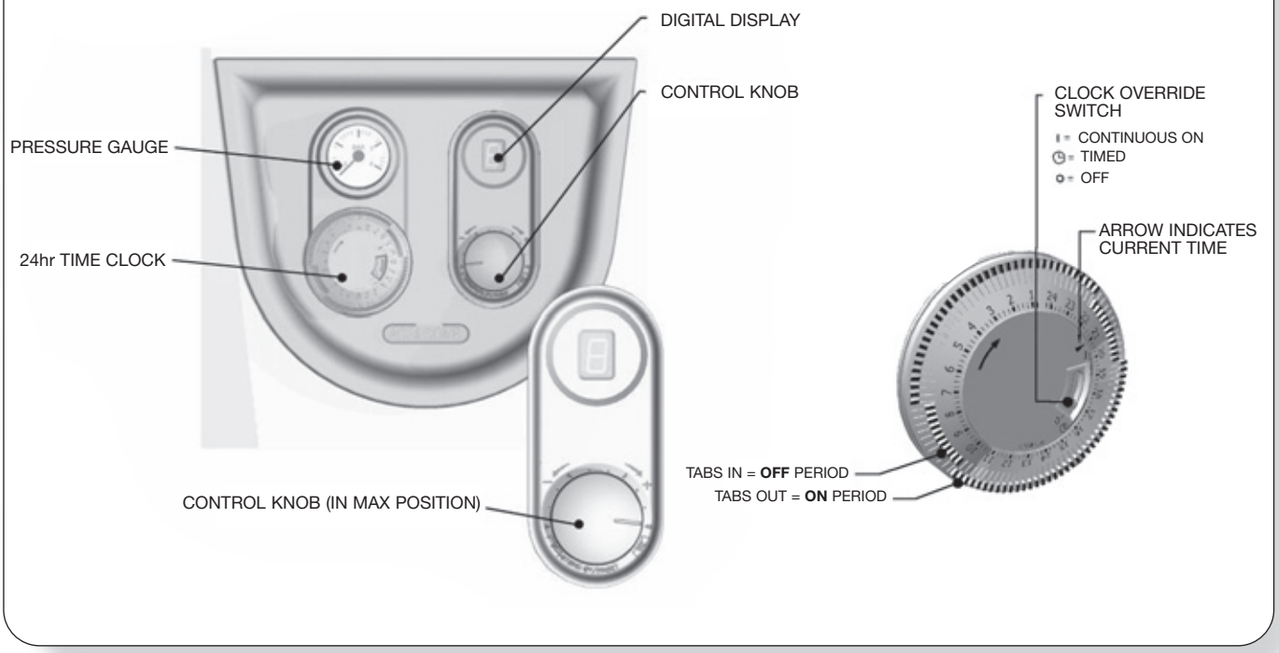

31

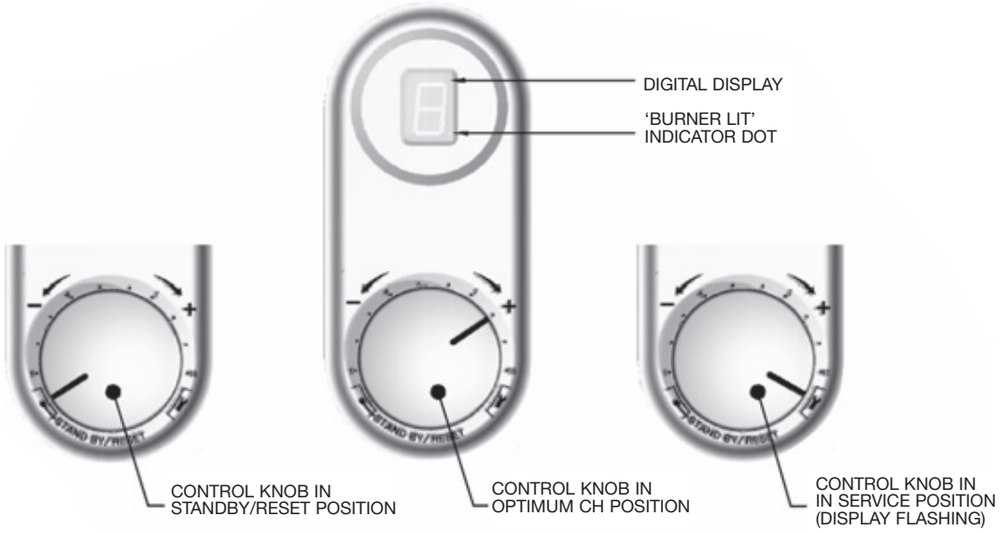

8.5 CENTRAL HEATING FAULT FINDING

Upon a demand for Central Heating, (closure of the time clock and room thermostat, where fitted), the controls should carry out a set of start up checks, followed by an ignition sequence. Refer to Section 5.2.

If the control has powered up correctly but does not respond to a CH demand. Check voltage between pin 2 connector X1A (orange wire) and pin 2 connector X1B (blue wire). If 0 V ac, check room thermostat and clock. If 230 V ac, check control for lockout or blocking codes, (refer to section 8.3), check operation of the pump.

If room thermostat and clock are OK and no lockout or blocking code exists and the control is not in anti cycle mode, then everything should be working correctly, if not contact Halstead Boilers Ltd Service Help Line: 08450 710780.

Note: *Whenever a CH demand is removed, either by the timer, the room thermostat or by the appliance's internal temperature control, an anti cycle mode is initiated which prevents the appliance from firing in CH mode for 5 minutes. Ensure that the control is not in this mode by removing power from the control and restoring it after a delay of 10 seconds.*

RESET LOCK-OUT CODES

LED CODE	FAULT/EFFECT	REASON	ACTION
1	Overheated appliance	Water temperature greater than 105°C	● Check no air is in heat exchanger/CH system ● Check plate heat exchanger is not blocked ● Check diverter valve operation ● Check flow/return thermistor
2	Differential check faulty/Flame for 15 seconds	Zero check faulty DHW or CH	● Check flow/return thermistor ● Check water pressure ● Check pump/CH system blockage ● Check no air is in heat exchanger/CH system
3	No gas or Lockout flame signal/ No flame, Lockout after 5 ignition attempts	Low gas pressure. No flame signal on ignition, or loss of signal during operation	● Check detection electrode/lead ● Check gas supply ● Check gas service cock ● Check gas valve and lead ● Check PCB/X2A & X2B connectors ● Check spark generator/spark electrode ● Check mains earth lead continuity
4	Flue gas sensor/No flame	Flue gas temperature greater than 95 °C	● Check no air is in heat exchanger/CH system water pressure

BLOCKING CODES

LED CODE	FAULT/EFFECT	REASON	ACTION
5	Defective sensor or thermal fuse blown	Defective flow, return or flue sensor or heat exchanger reached maximum safe working temperature	● Check flow, return and flue sensors ● Check wiring to sensors ● Check PCB/X6 & X8 connectors ● CHECK THERMAL FUSE IS OPEN CIRCUIT. IF THAT IS THE CASE THE HEAT EXCHANGER HAS TO BE REPLACED - SEE SECTION 9.8
6	Defective gas valve/ Flame continues after demand ends	5 sec flame signal after burner is switched off	● Check gas valve and lead ● Check PCB
7	Defective fan/No flame	Missing or Erroneous RPM signal	● Check fan ● Check mains fan lead & connector ● Check low voltage fan lead & connector ● Check PCB/X3 connector
A	PCB error/No flame	Internal error	● Check PCB
b	Activate BCC/No flame	New BCC (If required)	● Turn to reset to activate
d	Safety system failure/ No flame	Failure of internal self checking system	● Check PCB
E	BCC error/No flame	Incorrect /missing BCC	● Reseat or replace BCC (if fitted)
0	Water flow failure Flame for a short period only	Sensor temperature differential incorrect	● Check CH flow and return ● Check pump ● Check no air is in heat exchanger/CH system ● Check pipe connections ● Check wires to flow and return sensors are not crossed
P	Power supply error/ No flame	Low mains voltage	● Check mains voltage into boiler ● Check PCB connectors
u	DHW cold	Defective DHW thermistor or open circuit	● Check DHW flow switch & lead ● Check Diverter valve & lead ● Check PCB/X4 connector ● Check filter in flow switch
(No display)	No light indication	Defective power supply	● Check power supply ● Check PCB/X1B connector ● Check PCB fuse

***NOTE:* FAULT CODES 1 TO 4 CAN BE RESET BY FOLLOWING THE PROCEDURE ABOVE, HOWEVER IF ANY OTHER FAULT CODE IS SHOWING PLEASE CONTACT YOUR INSTALLER OR HALSTEAD BOILERS LTD. SERVICE HELP LINE: 08450 710780.**

Note: *All Lock-out and Blocking codes will flash if displayed.*
A flashing 'C' indicates that the boiler is in Service Mode and that the boiler will fire continuously at minimum input.
This setting is for the convenience of the Service engineer ONLY.

9 REPLACEMENT OF PARTS

Before commencing any service operation, ISOLATE the mains electrical supply and TURN OFF the gas supply at the main service cock.

Replacement of most parts first requires the removal of the sealed chamber front panels; refer to section 6.2.

There may be some slight water spillage; so electrical components should be protected.

It is the law that any service work must be carried out by a registered person.

9.1 IGNITION AND DETECTION ELECTRODES

Refer to Figure 32

a) Ensure supply voltage is isolated, and that the gas supply is isolated.

b) Remove the gas control valve, fan & burner assembly; refer to section 6.2.

c) Unscrew the two screws holding the electrode, remove electrode, and used gasket.

d) Fit the new electrode, and new gasket.

e) Check that electrode is aligned as detailed as appropriate in Figure 26.

f) Re-assemble in reverse order. Ensure that all joints and seals are correctly re-fitted.

9.2 IGNITOR UNIT AND IGNITION LEADS

Refer to Figure 33

a) Ensure supply voltage is isolated.

b) Remove the plug (if fitted) and earth lead from the ignition electrode. **Note:** Newer electrodes will have an integral ignition lead.

c) Remove the electrical supply leads.

d) Unscrew the two screws holding the ignitor unit, remove ignitor unit.

e) Fit the new ignitor unit.

g) Re-assemble in reverse order; ensure that the ignitor unit is orientated as shown in Figure 33, and that the brown electric supply lead is fitted to position 1 on the ignitor unit.

32

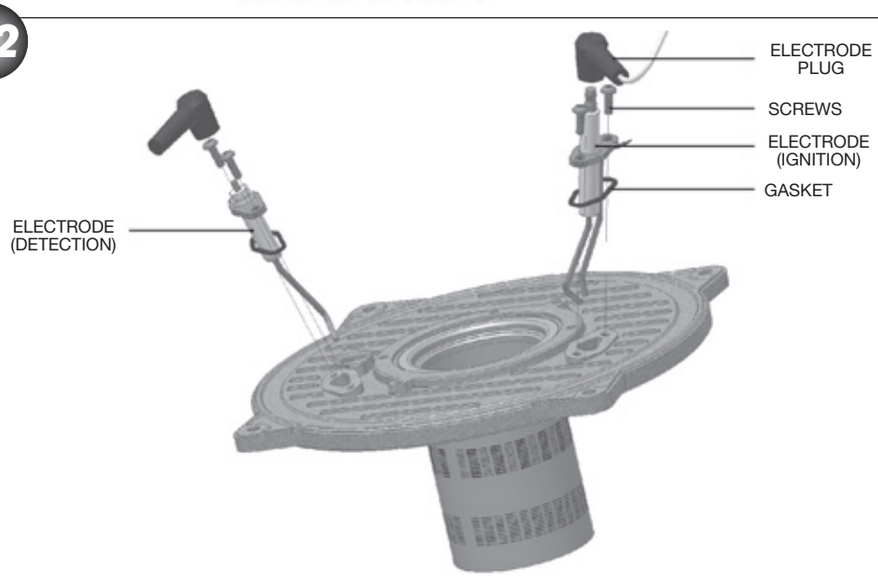

33

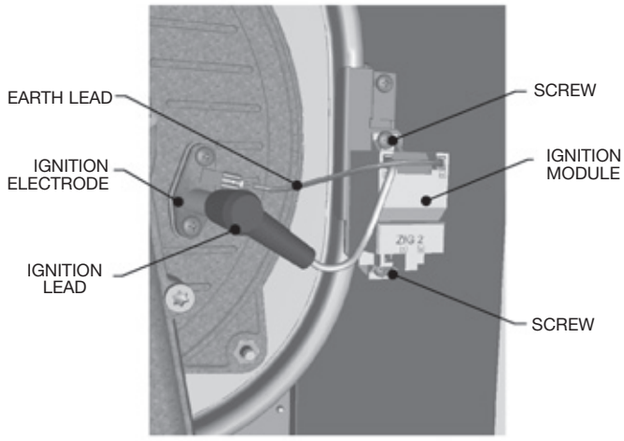

9.3 GAS CONTROL VALVE

Refer to Figures 34, 35 & 36

9.3.1 GAS CONTROL VALVE REMOVAL, REPLACEMENT AND SET-UP

a) Remove casing and control panels as described in section 6.2.

b) Unscrew the gas valve electrical plug and disconnect from the gas valve.

c) Ensuring the gas isolating cock is in the off position, undo the union nut holding the gas valve feed pipe to the gas isolating cock and disconnect.

d) Disengage the gas valve feed pipe grommet from the casing by pushing it upwards.

e) Remove the three Torx screws (T-25) of the air/gas channel fixing to the combustion chamber door (figure 34).

f) Remove the gas control valve, fan and air/gas channel as one complete assembly by carefully pulling forward and rotating anticlockwise. Then disengage the gas valve feed pipe from the casing by lifting the assembly upwards.

g) With the assembly on a bench, unscrew and remove the four screws securing the gas valve feed pipe, (figure 35).
Note: Newer versions may have a single flange nut securing the gas feed pipe.

h) Unscrew the three Torx screws (T-20) securing the gas valve onto the fan (figure 36).

i) Replace the gas valve and re-assemble in reverse order.

j) Ensure all seals in particular the burner seal (figure 40) and gas valve feed pipe seal are in good order and fitted correctly then check for gas soundness.

9.3.2 COMBUSTION CHECK SET-UP

When installing, commissioning or servicing a gas appliance that incorporates a pre-mix burner and zero-set governor, because it is not possible to measure an operating pressure the engineer should first check that the gas supply is metered and ascertain whether it is possible to measure the gas rate. If the gas input rate can be measured then the requirements of GSIUR 26(9) can be met, including any specific requirements in manufacturers' instructions.

If gas input rate cannot be measured then, to satisfy the intent of GSIUR 26(9), the engineer shall measure the combustion quality of the appliance in accordance with BS 7967 or the manufacturers' instructions.

If the engineer does not have the required equipment and no alternative test is specified by the manufacturer then the appliance shall be turned off and disconnected as an un-commissioned appliance until such time that equipment is available to undertake such tests.

If a new gas valve is fitted it must be adjusted as per the instructions that are supplied with the new gas valve.

A suitable, calibrated flue gas analyser is required to measure the CO_2.

34

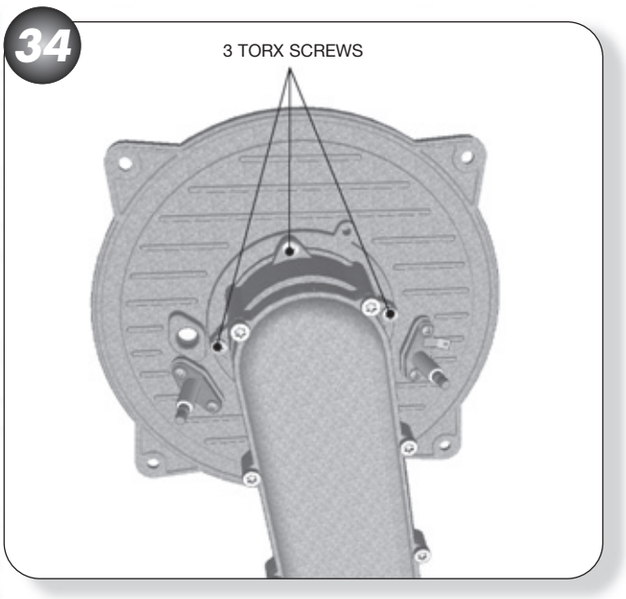

35

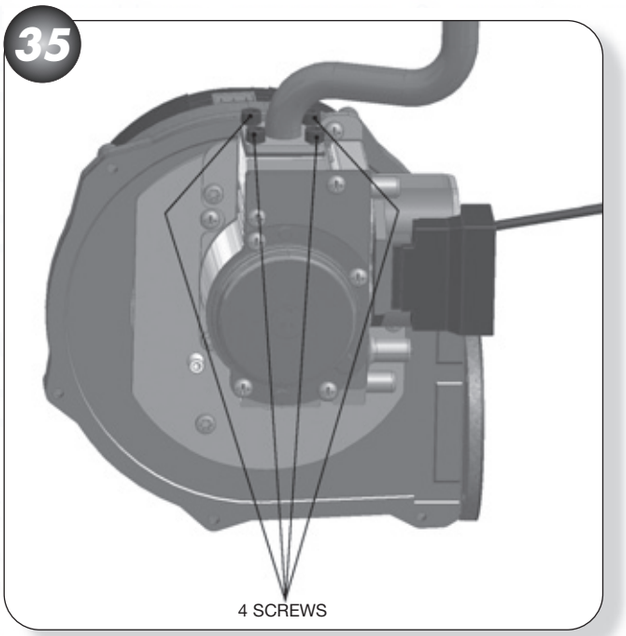

36

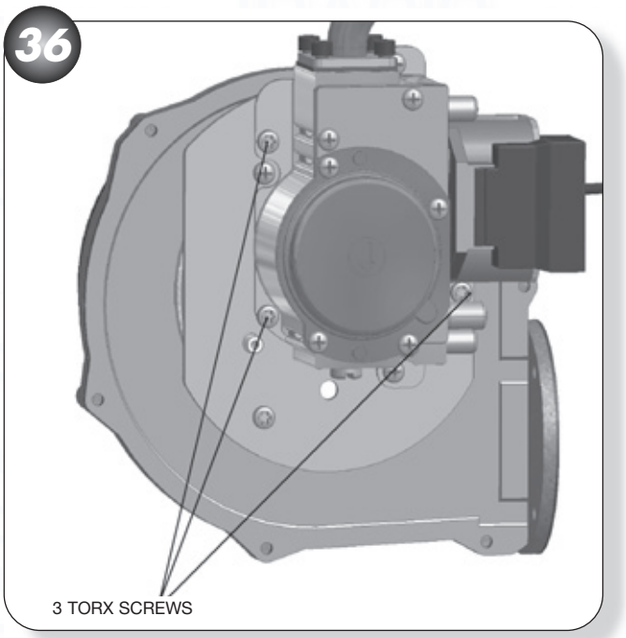

If the gas control valve is changed, then when the appliance is running, the flue gas CO_2 should be measured, refer to section 6.1, and compared to the values stated section 2.3. If the measured value does not correspond to the Performance Data, then contact: Halstead Boilers Ltd. Service Help line: 08450 710780.

Always seal the gas valve adjustment screw with paint after adjustment

9.4 FAN

Refer to Figures 36 & 37

a) Ensure supply voltage is isolated, and that the gas supply is isolated.

b) Remove the gas control valve, fan & burner assembly; refer to section 6.2.

c) Remove the gas control valve; refer to section 9.3.

d) Unscrew the three screws holding the gas valve mounting plate, remove plate; refer to Figure 36.

e) Unscrew the four screws holding the fan to the burner manifold, and remove fan; refer to Figure 39.

f) Attach and secure the replacement fan, replace the gasket.

g) Re-assemble in reverse order; ensure that all joints and seals are correctly re-fitted.

37

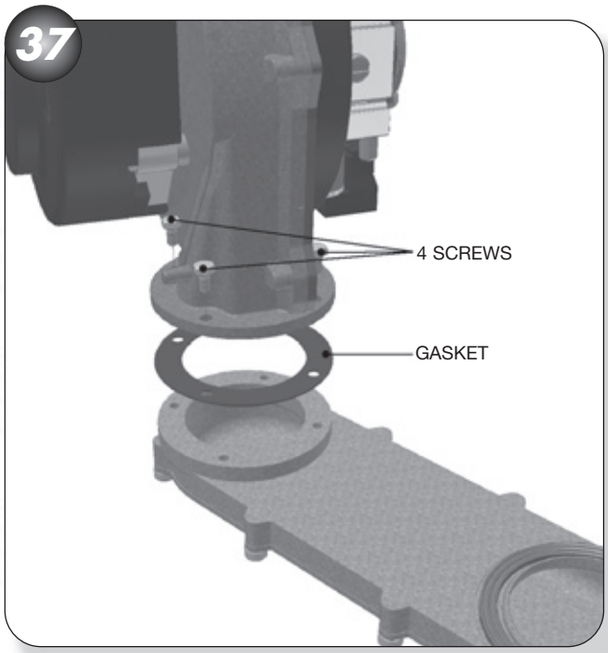

9.5 BURNER

Refer to Figures 34, 38 & 39

a) Ensure supply voltage is isolated, and that the gas supply is isolated.

b) Remove the gas control valve, fan & burner assembly; refer to section 6.2.

c) Unscrew the three Torx screws, (T-25), holding the manifold to the combustion chamber door, and remove the manifold; refer to Figure 34.

d) Remove the gasket, and withdraw the burner; refer to Figure 37.

e) Fit replacement burner, taking care not to damage the insulation, and ensure burner is correctly located by lining up the locating tab.

f) Fit new gasket; refer to Figure 40.

g) Re-assemble in reverse order; ensure that all joints and seals are correctly re-fitted.

38

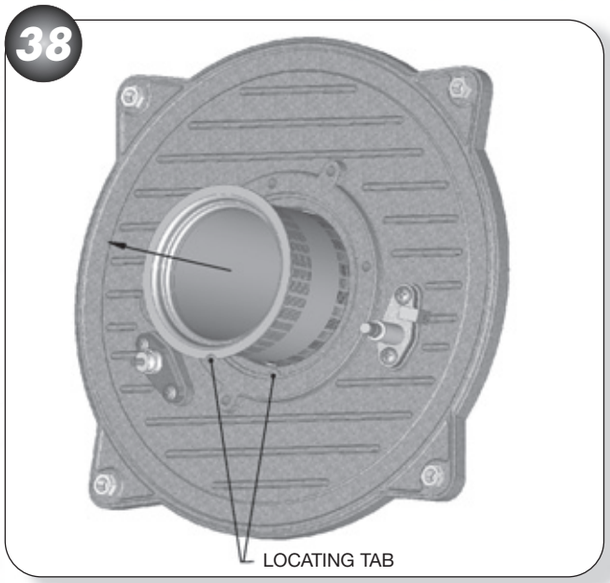

39

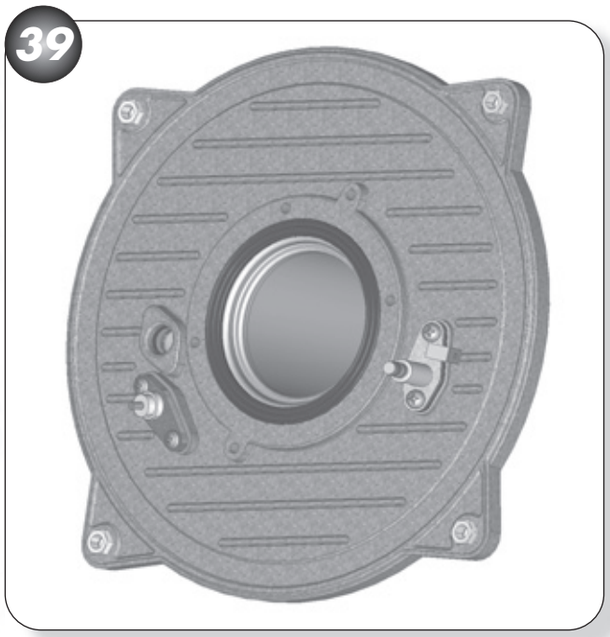

9.6 COMBUSTION CHAMBER FRONT INSULATION

The design of the appliance is such that the combustion chamber insulation should not require replacement unless mechanically damaged. It is recommended that to prevent dust, the insulation is dampened prior to removal, and that a protective mask is worn when changing or handling the insulation material.

Refer to Figure 40

a) Ensure supply voltage is isolated, and that the gas supply is isolated.

b) Remove the gas control valve, fan & burner assembly; refer to section 6.2.

c) Remove the electrodes; refer to section 9.1.

d) Remove the burner: refer to section 9.5.

e) Replace the combustion chamber front insulation.

f) Re-assemble the burner and electrodes, using new gaskets.

g) Check the position of the electrodes: refer to section 6.4.

h) Re-assemble in reverse order; ensure that all joints and seals are correctly re-fitted.

40

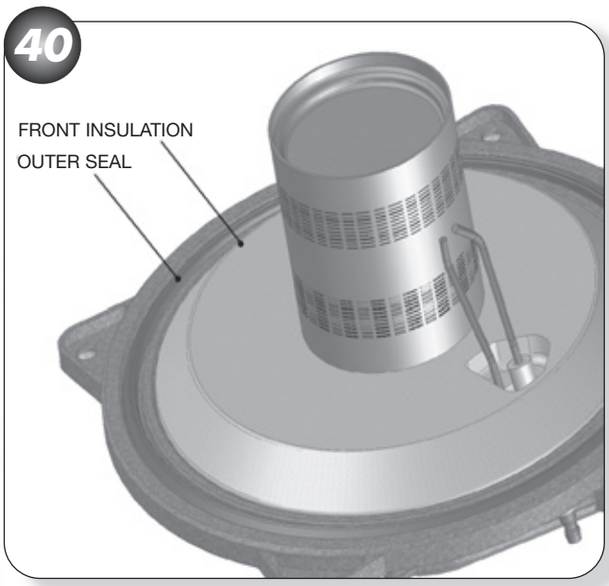

9.7 COMBUSTION CHAMBER REAR INSULATION

Refer to Figure 41

a) Ensure supply voltage is isolated, and that the gas supply is isolated.

b) Remove the gas control valve, fan & burner assembly; refer to section 6.2.

c) Use an Allen key to undo the central screw holding the rear insulation in place.

d) Remove old insulation and fit replacement, ensuring locating washer is in front.

e) Re-assemble in reverse order; ensure that all joints and seals are correctly re-fitted.

41

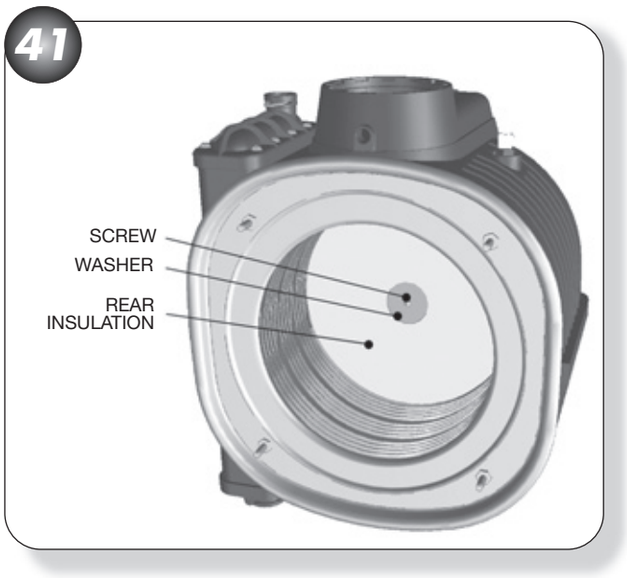

9.8 HEAT EXCHANGER

Refer to Figures 15, & 42

If thermal fuse has activated (open circuit and error code '5') the heat exchanger <u>must be replaced</u>.

a) Ensure supply voltage is isolated, and that the gas supply is isolated.

b) Remove the gas control valve, fan & burner assembly; refer to section 6.2.

c) Disconnect the electrical leads to the flue sensor, flow sensor, return sensor and thermal fuse.

d) Drain down the appliance; refer to section 9.23.

e) Disconnect the flue system from the appliance, 4 screws, and lift up to disengage the flue from the flue adaptor; refer to Figure 15.

f) Remove the retaining clip from the heat exchanger flow outlet, and undo the nut connecting the flow pipe to the plate-to-plate heat exchanger.

g) Rotate the flow pipe anticlockwise and gently pull down to disengage the flow pipe from the heat exchanger.

h) Remove the retaining clip from the heat exchanger return inlet, and undo the nut connecting the return pipe to the hydroblock adaptor fitting.

i) Rotate the return pipe clockwise and gently pull down to disengage the return pipe from the heat exchanger.

j) Disconnect the condensate drainpipe from the condensate drain adaptor; refer to section 6.6.

k) Undo the nut holding the manual air vent to the expansion vessel and disengage the vent from the heat exchanger by removing the clip and pulling upwards through the grommet at the top.

l) Remove the 2 screws retaining the spark generator to the right hand saddle bracket.

m) Remove the 2 screws retaining the expansion vessel upper bracket to the left hand saddle bracket.

n) Remove the 4 screws that retain both the left and right saddle brackets to the heat exchanger mounting brackets; refer to Figure 44.

o) Remove the saddle brackets and slide the heat exchanger forwards and out.

p) Re-assemble in reverse order; check integrity of the flow and return pipe 'O' rings and fibre washers and replace as necessary. Ensure that all joints and seals are correctly re-fitted.

q) Open the isolating cocks and vent air from the system using the manual air vent. Re-pressurise the system as necessary and check for water leaks.

42

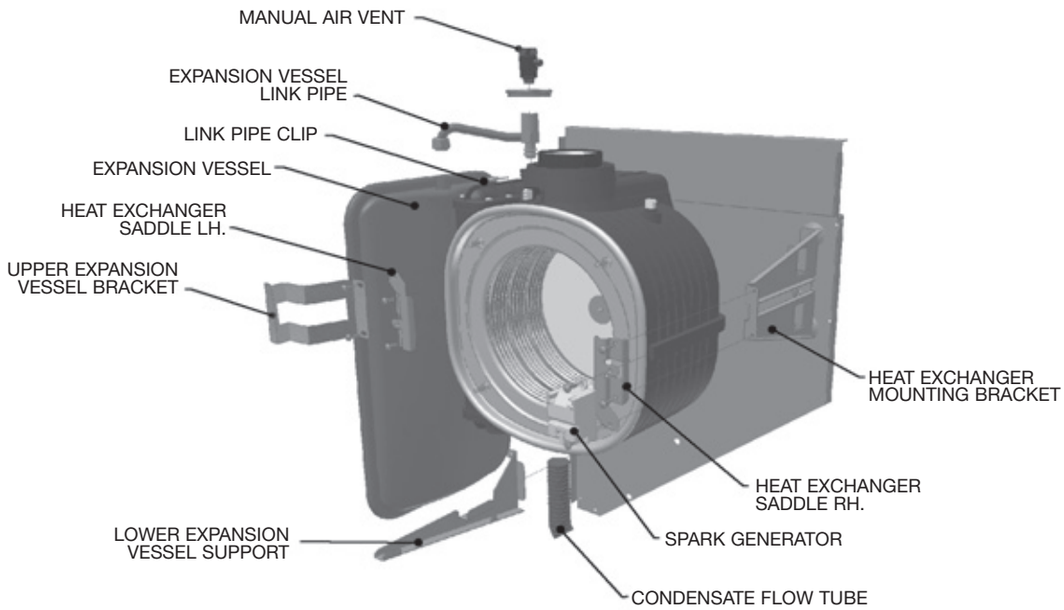

9.9 PUMP (HEAD ONLY)

Refer to Figure 43

a) Ensure supply voltage is isolated.

b) Disconnect the electrical lead to the pump head.

c) Drain down the appliance; refer to section 9.23.

d) Using a long Allen key unscrew the four screws holding the pump head; refer to Figure 42.

e) Remove the pump head, and fit replacement pump head, using a new 'O' ring seal.

f) Re-assemble in reverse order; ensure that all joints and seals are correctly re-fitted.

g) Open the isolating cocks and vent air from the system using the manual air vent. Re-pressurise the system as necessary and check for water leaks.

43

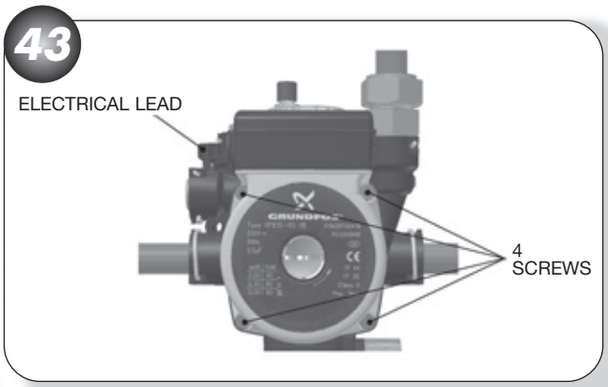

Note: It is likely that there will still be some water spillage when the head is removed.

9.10 DIVERTER VALVE MOTORISED HEAD

Refer to Figure 44

a) Ensure supply voltage is isolated.

b) Disconnect the electrical lead to the diverter valve motorised head.

c) Unscrew the locating screw; refer to Figure 44.

d) Unclip the diverter valve motorised head and slide it down to disengage it from the hydroblock body.

e) Fit the replacement diverter valve motorised head.

f) Re-assemble in reverse order; ensure that all joints and seals are correctly re-fitted.

44

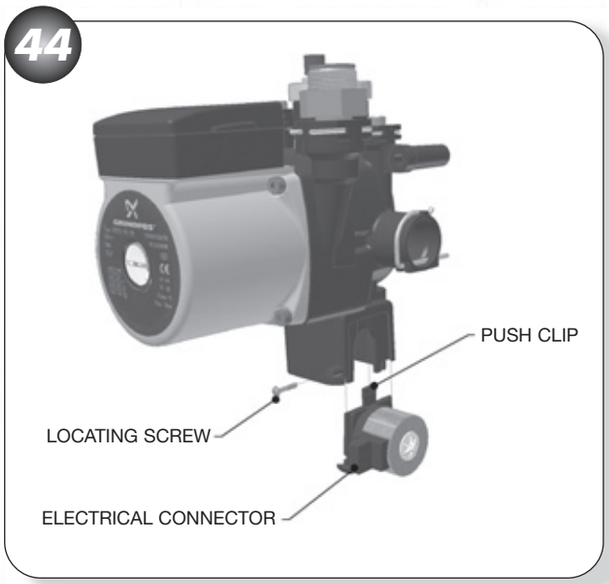

9.11 HYDROBLOCK ASSEMBLY

Refer to Figure 45

a) a) Ensure supply voltage is isolated.

b) Disconnect the electrical leads to the pump head and diverter valve motorised head.

c) Drain down the appliance; refer to section 9.23.

d) Remove the flow and return pipes from the heat exchanger; refer to section 9.8.

e) Remove the clip holding the hydroblock adaptor fitting in place, and remove fitting.

f) Remove the clip holding the return pipe in place.

g) Undo the nut connecting the CH return pipe to the CH return isolating cock, and disengage the CH return pipe from the hydroblock.

h) Undo the nut connecting the DHW return pipe to the plate heat exchanger and disengage the DHW return pipe from the hydroblock.

i) Unscrew the three screws holding the hydroblock onto the mounting studs, and remove the hydroblock.

j) Align the replacement hydroblock against the mounting studs and secure using the three screws.

k) Re-assemble in reverse order; ensure that all joints and seals are correctly re-fitted.

l) Open the isolating cocks and vent air from the system using the manual air vent. Re-pressurise the system as necessary and check for water leaks.

9.12 EXPANSION VESSEL

a) Ensure supply voltage is isolated.

b) Drain down the appliance; refer to section 9.23.

c) Undo the nut holding the manual air vent to the expansion vessel and disengage the link pipe from the heat exchanger by removing the clip and pulling upwards through the grommet at the top or by rotating out of the way.

d) Remove the upper expansion vessel retaining bracket.

e) Slide the expansion vessel forward and remove.

f) Slide the replacement expansion vessel in place.

g) Re-assemble in reverse order; ensure that all joints and seals are correctly re-fitted.

h) Open the isolating cocks and vent air from the system using the manual air vent. Re-pressurise the system as necessary and check for water leaks.

Note: It is likely that there will still be some water spillage when the Hydroblock is removed.

45

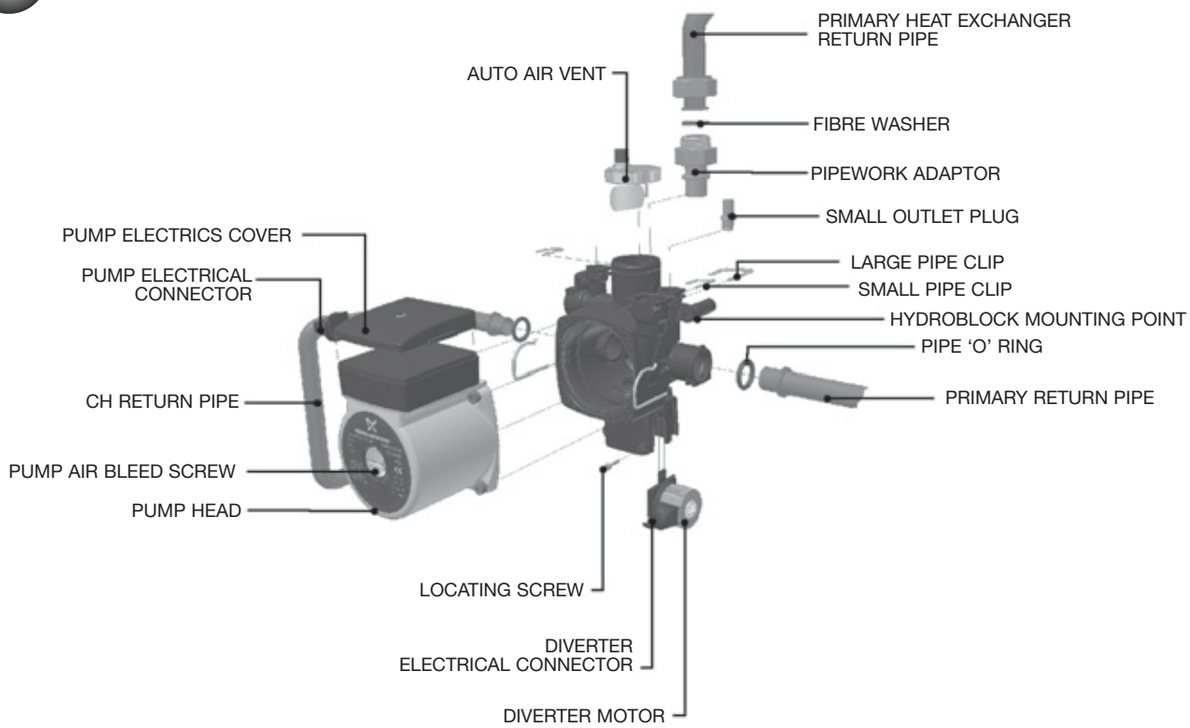

9.13 PRESSURE RELIEF VALVE

Refer to Figures 18 & 22

a) Ensure supply voltage is isolated.

b) Drain down the appliance; refer to section 9.23.

c) Undo the nut securing the discharge tail pipe to the pressure relief valve and remove. Undo the nut securing the pressure gauge capillary, and remove.

d) Undo the nut securing the pressure relief valve to the CH flow pipe and remove the pressure relief valve.

e) Fit the replacement pressure relief valve, using new fibre washers.

f) Re-assemble in reverse order; ensure that all joints and seals are correctly re-fitted.

i) Open the isolating cocks and vent air from the system using the manual air vent. Re-pressurise the system as necessary and check for water leaks.

Note: the pressure relief valve should not be used to drain the system.

9.14 WATER TEMPERATURE SENSORS

Refer to Figure 46

a) Ensure supply voltage is isolated.

b) Disconnect the electrical lead from the sensor to be changed.

c) Unclip the sensor from the pipe and remove.

d) Clip the replacement sensor onto the pipe and position as shown in Figure 46.

e) Reconnect the electrical lead.

46

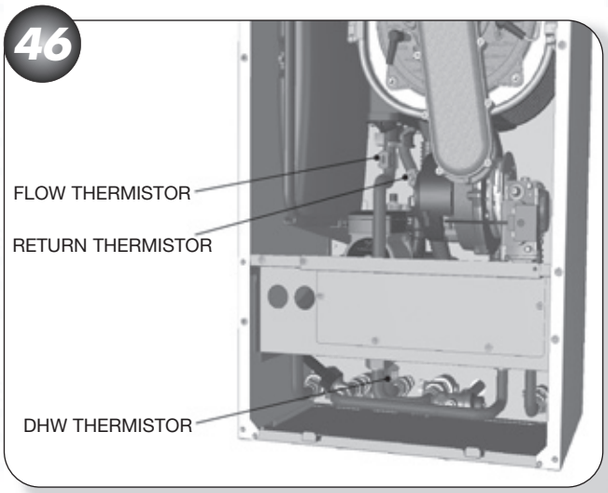

9.15 FLUE SENSOR

Refer to Figure 47

a) Ensure supply voltage is isolated.

b) Disconnect the electrical lead from the flue sensor.

c) Twist the flue sensor to release the bayonet connection and remove from the heat exchanger.

d) Fit the replacement flue sensor and reconnect the electrical lead (blue plug).

Note: the thermal fuse is not removable or a serviceable item, should the heat exchanger overheat then the thermal fuse will blow (blocking code '5') and the entire heat exchanger will need replacing.

47

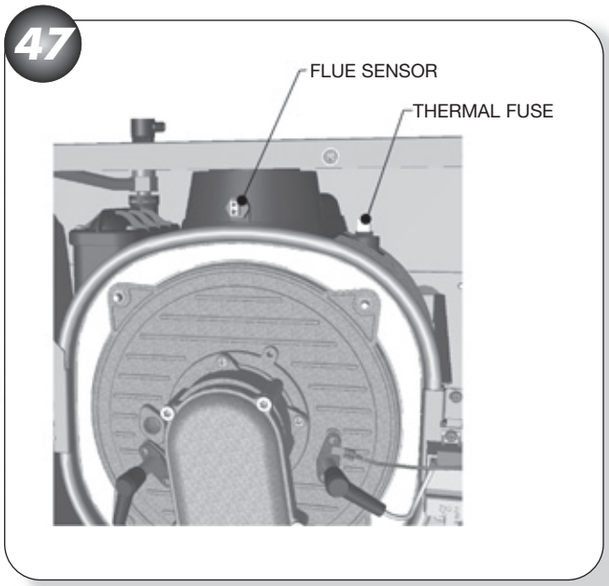

9.16 PLATE HEAT EXCHANGER

Refer to Figure 48

a) Ensure supply voltage is isolated.

b) Drain down the appliance; refer to section 9.23.

c) Close the DHW inlet isolating cock, open a DHW tap at the lowest point in the system and allow the pressure to dissipate. Close this tap again.

d) If it is suspected that the plate heat exchanger is blocked or is leaking then proceed as follows:

e) Undo the nut connecting the flow pipe from the main heat exchanger to the plate heat exchanger.

f) Undo the nut connecting the pipe from the hydroblock to the plate heat exchanger, and rotate out of the way.

g) Undo the nut connecting the plate heat exchanger to the CH flow water isolating cock pipe.

h) Undo the nut connecting the plate heat exchanger to the DHW outlet pipe.

i) Undo the nut connecting the plate heat exchanger to the DHW water isolating cock pipe.

j) Lift up the plate heat exchanger and remove.

k) Fit the replacement plate heat exchanger, using new case seals as necessary, ensuring the filter is fitted correctly.

l) Re-assemble in reverse order; ensure that all joints and seals are correctly re-fitted.

m) Open the isolating cocks and vent air from the system using the manual air vent. Re-pressurise the system as necessary and check for water leaks.

48

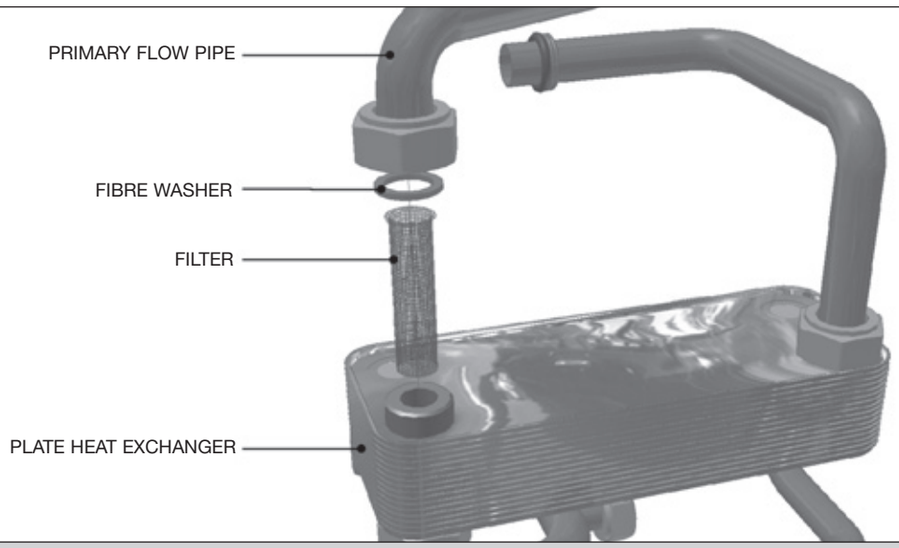

9.17 CONDENSATE DRAIN SYSTEM

Refer to Figure 27

a) Ensure supply voltage is isolated.

b) Open the drain sump cap, while holding a receptacle beneath to capture any condensate.

c) Disconnect the condensate drainpipe from the appliance.

d) Detach the condensate drainpipe from the heat exchanger sump adaptor, by gently pulling down.

e) Remove the condensate drain system, clean or replace as necessary.

f) Re-assemble in reverse order; ensure that all joints and seals are correctly re-fitted.

9.18 PRESSURE GAUGE

Refer to Figure 49

a) Ensure supply voltage is isolated.

b) Drain down the appliance; refer to section 9.23.

c) Disconnect the pressure gauge capillary gland nut from the pressure relief valve.

d) Having removed the decorative front and lowered the control fascia disengage the pressure gauge from the fascia panel, and remove the gauge.

e) Fit the new pressure gauge and re-assemble in reverse order.

f) Open the isolating cocks and vent air from the system using the manual air vent. Re-pressurise the system as necessary and check for water leaks.

49

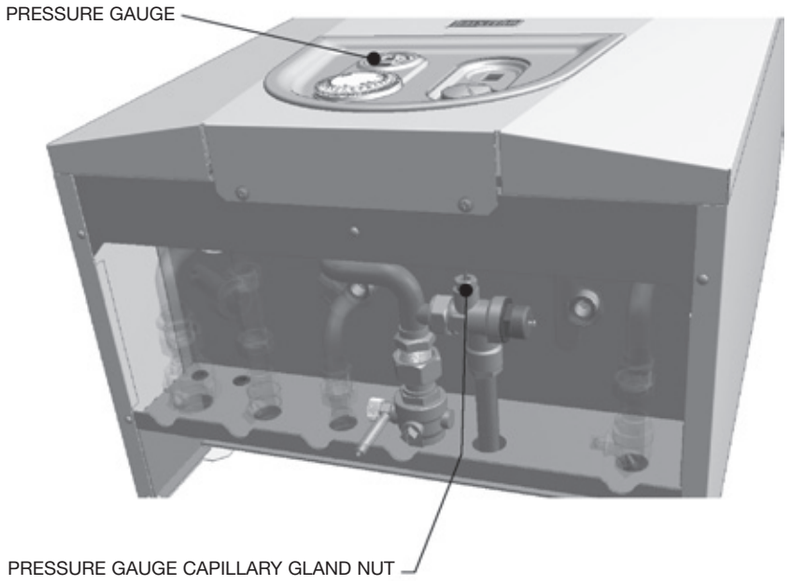

9.19 AUTO AIR VENT

Refer to Figure 45

a) Ensure supply voltage is isolated.

b) Drain down the appliance; refer to section 9.23.

c) Disconnect the vent tube from the auto air vent and check that it is free from blockage.

d) Unscrew the auto air vent, and fit replacement.

e) Re-assemble in reverse order; ensure that all joints and seals are correctly re-fitted.

f) Open the isolating cocks and vent air from the system using the manual air vent. Re-pressurise the system as necessary and check for water leaks.

9.20 CONTROL PCB

Refer to Figures 21, 29 & 50

a) Ensure supply voltage is isolated.

b) Remove the casing front panel, unscrew and lower the control fascia panel.

c) Unplug the electrical leads from the PCB. Refer to section 7.

d) Unplug the BCC if fitted.

e) Unscrew and remove the PCB plastic cover.

f) Unclip the user interface ribbon cable.

g) Unclip the PCB and withdraw.

h) Fit the new PCB and plug in the BCC if previously used.

i) Re-assemble in reverse order, ensuring user interface ribbon cable is attached securely.

If the boiler requires resetting turn the control knob anti-clockwise to 'STANDBY' position and then back to 'ON' within two seconds. Refer to section 5.4.

50 PCB HOUSING

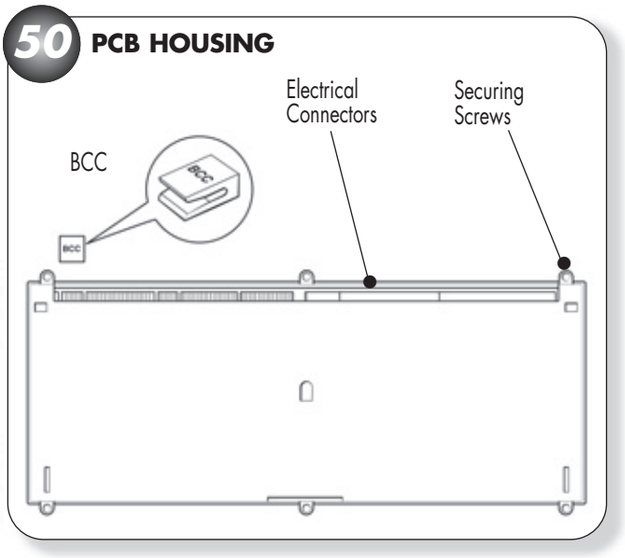

9.21 TIME CLOCK

Refer to Figures 51

a) Ensure supply voltage is isolated.

b) Remove the decorative front panel, unscrew and lower the control fascia panel.

c) Unplug the electrical leads from the PCB. Refer to section 7.

d) Unplug the four electrical leads from the back of the clock.

e) Remove the four retaining screws and withdraw the clock from the control panel.

f) Fit the new clock and re-assemble in reverse order.

9.22 DHW FLOW SWITCH, DHW FLOW REGULATOR AND DHW FILTER

Refer to Figure 28

a) Ensure supply voltage is isolated.

b) Remove the electrical lead to the DHW flow switch.

c) Close the DHW inlet isolating cock, open a DHW tap at the lowest point in the system and allow the pressure to dissipate. Close this tap again.

d) Undo the nut connecting the DHW flow switch to the DHW inlet isolating cock.

e) Undo the nut connecting the DHW flow switch to the water feed pipe, and remove the DHW flow switch, (containing the DHW Flow Regulator), and DHW Filter.

f) The assembly can now be flushed clean using water, and parts replaced as necessary.

g) Re-assemble in reverse order, using a new fibre washer; ensure that all joints and seals are correctly re-fitted.

h) Open the DHW inlet isolating cock and vent air from the system by opening each hot water tap in the house in turn.

spares & parts online IBASIS.CO.UK

51

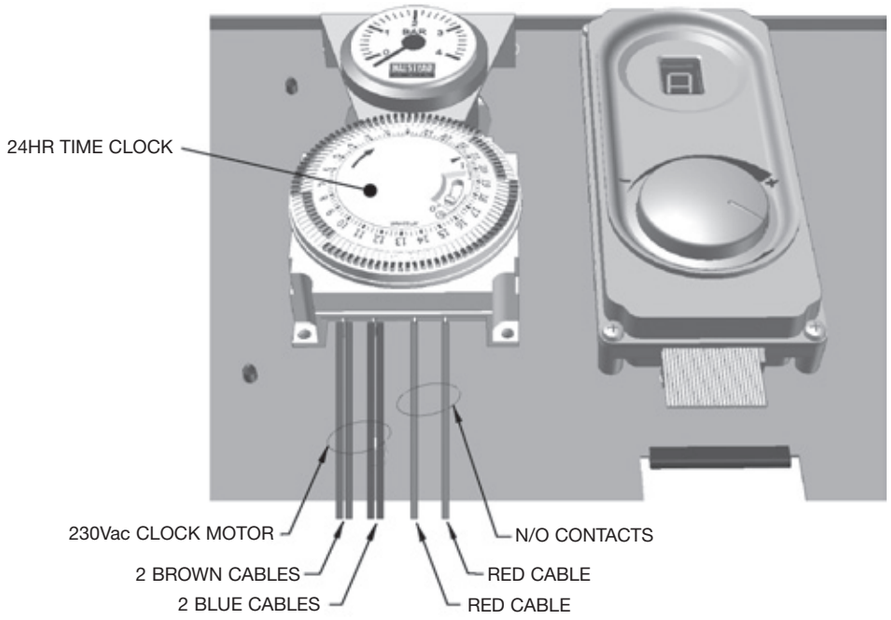

52

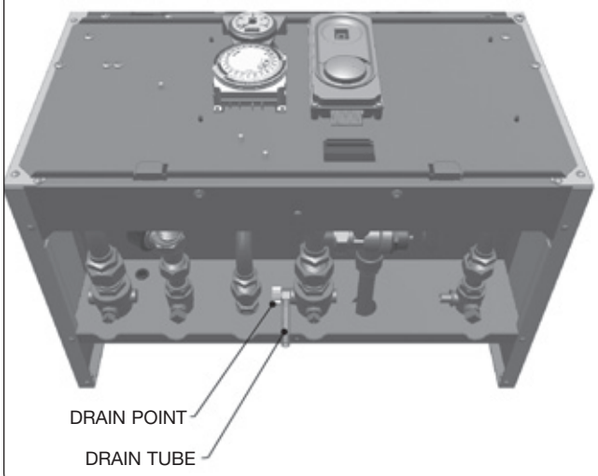

9.23 DRAINING THE APPLIANCE

Refer to Figures 18, 42 & 52

a) Before draining, give the appliance a brief CH demand, to ensure the diverter valve is in the CH position.

b) Ensure supply voltage is isolated.

c) If not draining the entire CH system, close the CH flow and CH return water isolating cocks.

d) Close the DHW return water-isolating cock.

e) Drain down the CH system from the external drain point, and drain the boiler using the manual drain tap on the CH flow water isolating cock (figure 18), in conjunction with the manual bleed valve located on the top LHS of the heat exchanger; refer to Figures 44 and 54.

f) Where the DHW circuit is to be worked on, close the DHW inlet isolating cock, open a DHW tap at the lowest point in the system and allow the pressure to dissipate. Close this tap again.

10 SHORT PARTS LIST

Refer to Figure 54

Key	G C Part No.	Description	No off	Makers Pt No.
1	H29-740	Electrode - Ignition c/w Gasket	1	988526
2	H38-213	Detection Electrode c/w Gasket	1	988540
3	H29-236	Spark Generator c/w Lead	1	500665
4a	H38-214	Gas Control Valve Assy - NG (Ace HE24 & 30)	1	988541
4b		Gas Control Valve Assembly - NG (Ace HE35)	1	988563
5	H38-215	Fan Assembly	1	601016
6A	H29-171	Burner (Ace HE 24)	1	700600
6B	H29-172	Burner (Ace HE 30)	1	700601
7	H38-216	Insulation - Burner Door	1	451106
8A	H38-217	Heat Exchanger (Ace HE 24)	1	451101
8B	H38-218	Heat Exchanger (Ace HE 30)	1	451100
9	H29-202	Pump Head 6m	1	500672
10	H29-203	Valve - Diverted - Motorised Head	1	500673
11	H29-201	Hydroblock Pump Assembly	1	500650
12	H29-237	Expansion Vessel	1	451020
13	H29-199	Valve 3Bar - Pressure Relief	1	300734
14	H29-213	Sensor - Water Temperature	2	500661
15	H38-219	Thermistor - Flue	1	500662
16	H29-190	Heat Exchanger - 16 Plate	1	451015
17	H29-192	CH Filter - Plate Heat Exchange	1	500498
18	H38-220	Thermistor - Outlet - DHW	1	500663
19	E23-541	Pressure Gauge 4bar - Altecnic IC96467238	1	450961
20	H29-204	Air Vent - Auto	1	500674
21a	H38-221	Control PCB c/w Box Assembly (Ace HE 24)	1	988542
21b	H38-222	Control PCB c/w Box Assembly (Ace HE 30)	1	988543
21c		Control PCB c/w Box Assembly (Ace HE 35)	1	988562
22	H38-223	User Control Fascia Assermbly	1	988544
23	E23-671	Time Clock - Grasslin FM1STUH	1	600520
24	H38-224	Air Vent Pipe c/w Seal	1	988545
25	H38-225	Switch - Flow - DHW	1	300695
26a	H08-702	DHW Flow Regulator (Ace HE 24)	1	300717
26b	E23-692	DHW Flow Regulator (Ace HE 30)	1	300715
26c		DHW Flow Regulator (Ace HE 35)	1	300718
27	H29-260	Filter - Conical - Mains Inlet	1	500497
28	H29-179	Valve - Manual Bleed	1	300730
29	H38-226	Heat Exchanger c/w Seals & Clip Kit	1	988546
30	H29-208	Kit - Hydroblock - O-Ring and Clip	1	988490

53

1

2

3

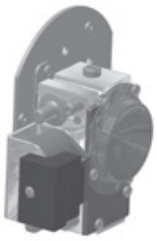
4

5

6

7

8

9

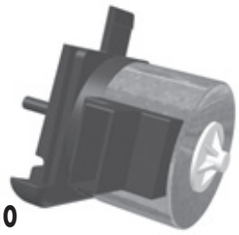
10

11

12

13

14

15

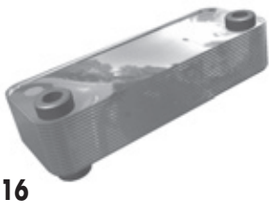
16

17

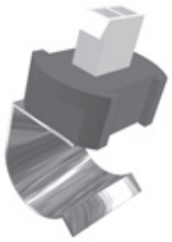
18

19

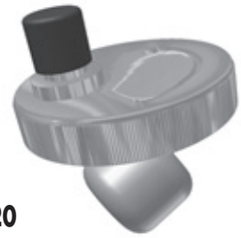
20

21

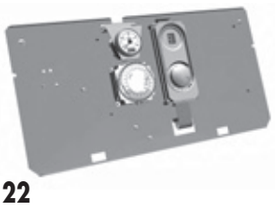
22

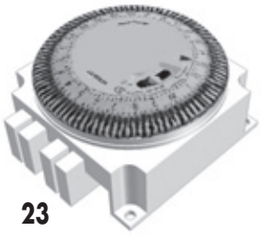
23

24

25

26

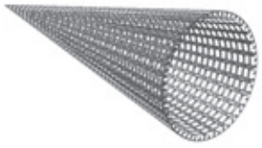
27

28

BENCHMARK No. | | | | | | |

GAS BOILER COMMISSIONING CHECKLIST

BOILER SERIAL No. _____ **NOTIFICATION No.** _____

CONTROLS *To comply with the Building Regulations, each section must have a tick in one or other of the boxes*

TIME & TEMPERATURE CONTROL TO HEATING	ROOM T/STAT & PROGRAMMER/TIMER ☐	PROGRAMMABLE ROOMSTAT ☐
TIME & TEMPERATURE CONTROL TO HOT WATER	CYLINDER T/STAT & PROGRAMMER/TIMER ☐	COMBI BOILER ☐
HEATING ZONE VALVES	FITTED ☐	NOT REQUIRED ☐
HOT WATER ZONE VALVES	FITTED ☐	NOT REQUIRED ☐
THERMOSTATIC RADIATOR VALVES	FITTED ☐	
AUTOMATIC BYPASS TO SYSTEM	FITTED ☐	NOT REQUIRED ☐

FOR ALL BOILERS CONFIRM THE FOLLOWING

THE SYSTEM HAS BEEN FLUSHED IN ACCORDANCE WITH THE BOILER MANUFACTURER'S INSTRUCTIONS	☐
THE SYSTEM CLEANER USED	
THE INHIBITOR USED	

FOR THE CENTRAL HEATING MODE, MEASURE & RECORD

GAS RATE	☐ m3/hr	☐ ft3/hr
BURNER OPERATING PRESSURE (IF APPLICABLE)	☐ N/A	☐ mBar
CENTRAL HEATING FLOW TEMPERATURE		☐ °C
CENTRAL HEATING RETURN TEMPERATURE		☐ °C

FOR COMBINATION BOILERS ONLY

HAS A WATER SCALE REDUCER BEEN FITTED?	YES ☐ NO ☐
WHAT TYPE OF SCALE REDUCER HAS BEEN FITTED?	

FOR THE DOMESTIC HOT WATER MODE, MEASURE & RECORD

GAS RATE	☐ m3/hr	☐ ft3/hr
MAXIMUM BURNER OPERATING PRESSURE (IF APPLICABLE)	☐ N/A	☐ mBar
COLD WATER INLET TEMPERATURE		☐ °C
HOT WATER OUTLET TEMPERATURE		☐ °C
WATER FLOW RATE		☐ lts/min

FOR CONDENSING BOILERS ONLY CONFIRM THE FOLLOWING

THE CONDENSATE DRAIN HAS BEEN INSTALLED IN ACCORDANCE WITH THE MANUFACTURERS INSTRUCTIONS	YES ☐

FOR ALL INSTALLATIONS CONFIRM THE FOLLOWING

THE HEATING AND HOT WATER SYSTEM COMPLIES WITH CURRENT BUILDING REGULATIONS	☐
THE APPLIANCE AND ASSOCIATED EQUIPMENT HAS BEEN INSTALLED AND COMMISSIONED IN ACCORDANCE WITH THE MANUFACTURER'S INSTRUCTIONS	☐
IF REQUIRED BY THE MANUFACTURER, HAVE YOU RECORDED A CO/CO_2 RATIO READING	N/A ☐ YES ☐ CO/CO_2 RATIO
THE OPERATION OF THE APPLIANCE AND SYSTEM CONTROLS HAVE BEEN DEMONSTRATED TO THE CUSTOMER	☐
THE MANUFACTURER'S LITERATURE HAS BEEN LEFT WITH THE CUSTOMER	☐

COMMISSIONING ENG'S NAME

PRINT _____ CORGI ID No. _____

SIGN _____ DATE _____

SERVICE INTERVAL RECORD

It is recommended that your heating system is serviced regularly and that you complete the appropriate Service Interval Record below.

SERVICE PROVIDER Before completing the appropriate Service Interval Record below, please ensure you have carried out the service as described in the boiler manufacturer's instructions.

Always use the appliance manufacturer's specified spare part when replacing gas controls.

SERVICE 1 DATE:
ENGINEER NAME
COMPANY NAME
TEL No.
CORGI ID SERIAL No.
COMMENTS
SIGNATURE

SERVICE 2 DATE:
ENGINEER NAME
COMPANY NAME
TEL No.
CORGI ID SERIAL No.
COMMENTS
SIGNATURE

SERVICE 3 DATE:
ENGINEER NAME
COMPANY NAME
TEL No.
CORGI ID SERIAL No.
COMMENTS
SIGNATURE

SERVICE 4 DATE:
ENGINEER NAME
COMPANY NAME
TEL No.
CORGI ID SERIAL No.
COMMENTS
SIGNATURE

SERVICE 5 DATE:
ENGINEER NAME
COMPANY NAME
TEL No.
CORGI ID SERIAL No.
COMMENTS
SIGNATURE

SERVICE 6 DATE:
ENGINEER NAME
COMPANY NAME
TEL No.
CORGI ID SERIAL No.
COMMENTS
SIGNATURE

SERVICE 7 DATE:
ENGINEER NAME
COMPANY NAME
TEL No.
CORGI ID SERIAL No.
COMMENTS
SIGNATURE

SERVICE 8 DATE:
ENGINEER NAME
COMPANY NAME
TEL No.
CORGI ID SERIAL No.
COMMENTS
SIGNATURE

SERVICE 9 DATE:
ENGINEER NAME
COMPANY NAME
TEL No.
CORGI ID SERIAL No.
COMMENTS
SIGNATURE

SERVICE 10 DATE:
ENGINEER NAME
COMPANY NAME
TEL No.
CORGI ID SERIAL No.
COMMENTS
SIGNATURE

WRAS APPROVED PRODUCT

benchmark™
The code of practice for the installation, commissioning & servicing of central heating systems

halstead

Glen Dimplex Boilers, Stoney Lane, Prescot Merseyside L35 2XW.

For telephone enquiries call: 0844 371 1111.

Website: www.glendimplexboilers.co.uk

Part of the Glen Dimplex Group

Glen Dimplex Boilers is continuously improving its products and may therefore change specifications without prior notice. The statutory rights of the consumer are not affected.

03/10 751094 Issue 3

SERVICE HELPLINE: 0844 371 1111