INSTALLATION &
SERVICING INSTRUCTIONS
FOR THE

# HALSTEAD

# HALSTEAD Best db 80

BRITISH MADE BOILERS

CAST IRON

WALL MOUNTED

FAN ASSISTED BOILER

TO BE LEFT WITH THE USER

FOR USE WITH NATURAL GAS ONLY (G20)

SUPPLY PRESSURE 20 mbar

Best 80 G. C. No. 41 333 56

CE 0086 EC 0087/AT/5342

# CONTENTS


| | | Page |
|---|---|---|
| 1 | **INTRODUCTION** | **1** |
| 2 | **TECHNICAL SPECIFICATIONS** | **1** |
| 2.1 | Performance data | 1 |
| 2.2 | Connection sizes | 1 |
| 2.3 | General data | 1 |
| 2.4 | Minimum clearance and overall dimensions | 1 |
| 2.5 | Air/flue duct specifications | 2 |
| 2.6 | Exploded diagram | 6 |
| 3 | **INSTALLATION REQUIREMENTS** | **7** |
| 3.1 | Statutory requirements | 7 |
| 3.2 | Boiler location | 7 |
| 3.3 | Flue terminal position | 8 |
| 3.4 | Ventilation requirements | 8 |
| 3.5 | Gas supply | 8 |
| 3.6 | Electrical supply | 8 |
| 3.7 | Water systems | 8 |
| 4 | **INSTALLING THE APPLIANCE** | **11** |
| 4.1 | Unpacking the appliance | 11 |
| 4.2 | Preparing the wall | 11 |
| 4.3 | Preparing the appliance | 12 |
| 4.4 | Mounting the appliance | 12 |
| 4.5 | Flue/air duct installation | 12 |
| 4.6 | Gas connection | 15 |
| 4.7 | Water connections | 15 |
| 4.8 | Wiring instructions | 15 |
| 5 | **COMMISSIONING & TESTING** | **18** |
| 5.1 | Open vented water systems | 18 |
| 5.2 | Sealed water systems | 18 |
| 5.3 | User instructions | 18 |
| 6 | **ROUTINE SERVICING** | **19** |
| 6.1 | Main burner assembly | 19 |
| 6.2 | Fan assembly | 19 |
| 6.3 | Heat exchanger | 19 |
| 6.4 | Re-assemble and re-commission | 19 |
| 7 | **PARTS REPLACEMENT** | **20** |
| 7.1 | Overheat cut off device | 20 |
| 7.2 | Flow temperature thermistor | 20 |
| 7.3 | Air pressure switch | 20 |
| 7.4 | Ignition PCB (fully enclosed) | 20 |
| 7.5 | Aquastat PCB & Housing | 20 |
| 7.6 | Potentiometer | 21 |
| 7.7 | Main burner injector | 21 |
| 7.8 | Gas valve | 21 |
| 7.9 | Main burner | 21 |
| 7.10 | Ignition electrode (front left hand of burner) | 21 |
| 7.11 | Flame sensing electrode (rear left of burner) | 21 |
| 7.12 | Fan assembly | 22 |
| 7.13 | Combustion chamber insulation | 22 |
| 8 | **INTERNAL WIRING DIAGRAMS** | **22** |
| 8.1 | Functional flow wiring diagram | 22 |
| 8.2 | Illustrated wiring diagram | 22 |
| 9 | **FAULT FINDING** | **23** |
| 10 | **SHORT PARTS LIST** | **24** |
| 11 | Supplementary instructions for Flue systems with vertical terminals | 25 |
| 12 | Supplementary instructions for Flue systems incorporating an additional 90° elbow | 25 |
| | SE-DUCT Applications | 25 |


# 1 INTRODUCTION

The **Halstead Best db 80** is a wall mounted, fan assisted balanced flue natural gas boiler incorporating a cast iron heat exchanger. The appliance incorporates automatic direct burner ignition and electronic temperature control. It features an attractive white enamelled casing with a removable front panel which when removed enables the appliance to be fitted within a standard kitchen wall unit. (Remove top and bottom panels of kitchen unit).

The appliance is supplied with a standard concentric air and flue duct suitable for flue lengths of up to 820mm (32in). The duct assembly is connected to the boiler via an elbow which can exit the appliance in any horizontal direction. Additional flue kits are available to extend the flue length up to a maximum of 2.354m (93in), and further kits are available to provide up to two bends in the flue, although the maximum length must be reduced (as detailed in these instructions) to accommodate extra bends. A vertical outlet kit is also available for installations where an outside wall is not accessible and it is required to fit the duct "through the roof". Installation using the standard flue kit (with or without straight extensions) is described in the main text of these instructions. This booklet describes installations involving raised flue systems, extra elbows, and the vertical outlet kit.

The appliance can be installed from inside the room without access to the external wall providing that a wall liner is fitted and the wall thickness is less than 0.5m (19in). The wall liner is available as an optional extra. See Section 4 for further details. (Note: If the vertical outlet kit is to be used, access to the roof is necessary).

This appliance is suitable for fully pumped, open vented or sealed systems, but may be used on an open vent system utilising gravity domestic hot water and pumped central heating

**Fully Pumped:** If thermostatic radiator valves are fitted it is recommended that a bypass is installed to provide a suitable water circuit should all the thermostatic radiator valves be shut. This bypass circuit should incorporate a minimum volume of 7 litres. It may utilise one radiator which should be fitted with lockshield valves only.

**Gravity:** It is recommended that when used on a gravity domestic hot water application a Honeywell "C Plus" plan or equivalent is fitted to the system to give suitable control over the domestic hot water temperature. The cylinder thermostat should be set NO higher than 60°C. The Honeywell "C Plus" will allow the pump overun to operate (should it be necessary) without warming the radiators when the domestic hot water only is on. The bypass should have a water volume, (7 litres minimum) but should NOT incorporate any radiators. The flow sensing temperature is limited to 60°C in the gravity mode, when the CH pump is off. This is to prevent the cylinder of DHW from overheating.

# 2 TECHNICAL SPECIFICATIONS

## 2.1 PERFORMANCE DATA BEST 80

| Best | | | 80 |
|---|---|---|---|
| Heat Output | Max. | kw | 23.44 |
| | | Btu/hr | 79.977 |
| | Min. | kw | 17.57 |
| | | Btu/hr | 59.950 |
| Heat Input Gross | Max. | kw | 29.6 |
| | | Btu/hr | 101.000 |
| | Min. | kw | 22.7 |
| | | Btu/hr | 77.450 |
| Heat Input Nett | Max. | kw | 26.64 |
| | | Btu/hr | 90895 |
| | Min. | kw | 20.43 |
| | | Btu/hr | 69707 |
| Burner Pressure | Max. | mbar | 17.7 |
| | | in.wg | 7.1 |
| | Min. | mbar | 10.4 |
| | | in.wg | 4.2 |

## 2.2 CONNECTION SIZES

| | |
|---|---|
| Gas Connection | Rc 0.5in (1/2in BSP female) |
| Gravity Water Connections | 2x28mm copper compression |
| Pumped Water Connections | 2x22mm copper compression |

## 2.3 GENERAL SPECIFICATIONS

| Best | 80 |
|---|---|
| **Main Burner** | |
| Injector mm (in) Dia. | 4.12(.162) |
| **Minimum Water Flow Rate** | |
| l/min (galls/min) | 30.5(6.7) |
| **Total Water Capacity** litres (galls) | 4.5(1.0) |
| **Pressure Loss at** 11°C (20°F) | |
| Temp. Diff. $mH_2O$ | 1.48 |
| **Static Head** | |
| Maximum metres (ft) | 30 (100) |
| **Static Head** | |
| Minimum metres (ft) | 1.2 (3.9) |
| **Weight** | |
| Empty kg (lb) | 56 (123) |
| **Lift Weight** kg (lb) | 45.6 (100) |
| **Electricity Supply** | 230V-50Hz |
| **Power Consumption** Watts | 35 |
| **External Fuse** Amps | 3 |
| **Gas Consumption** | |
| l/min ($ft^3$/hr) | 46.18(97.7) CV 38.5MJ/$m^3$ |

## 2.4 OVERALL DIMENSIONS AND MINIMUM CLEARANCES

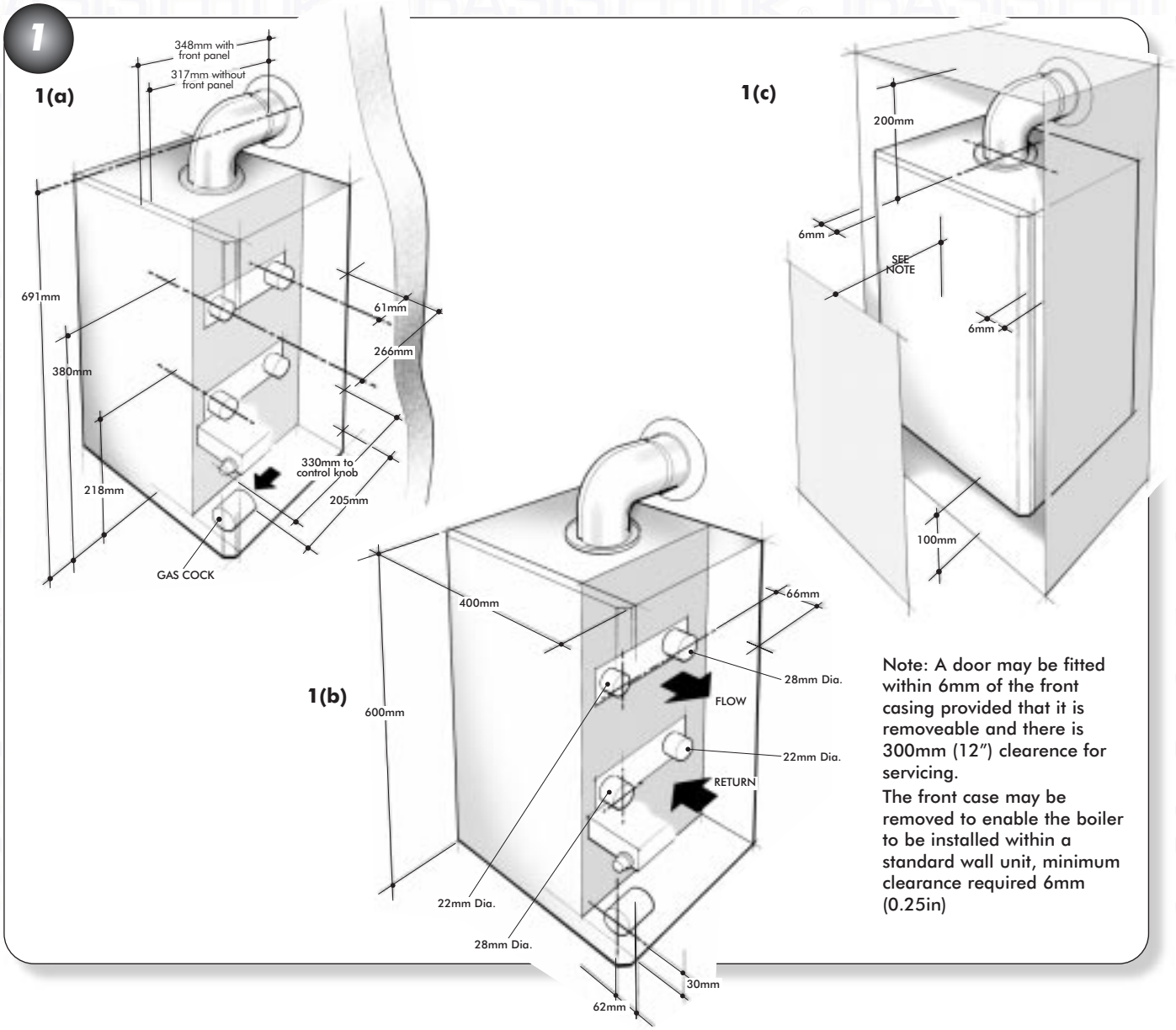


Note: A door may be fitted within 6mm of the front casing provided that it is removeable and there is 300mm (12") clearence for servicing.

The front case may be removed to enable the boiler to be installed within a standard wall unit, minimum clearance required 6mm (0.25in)

## 2 EXAMPLES OF ALTERNATIVE FLUE SYSTEMS

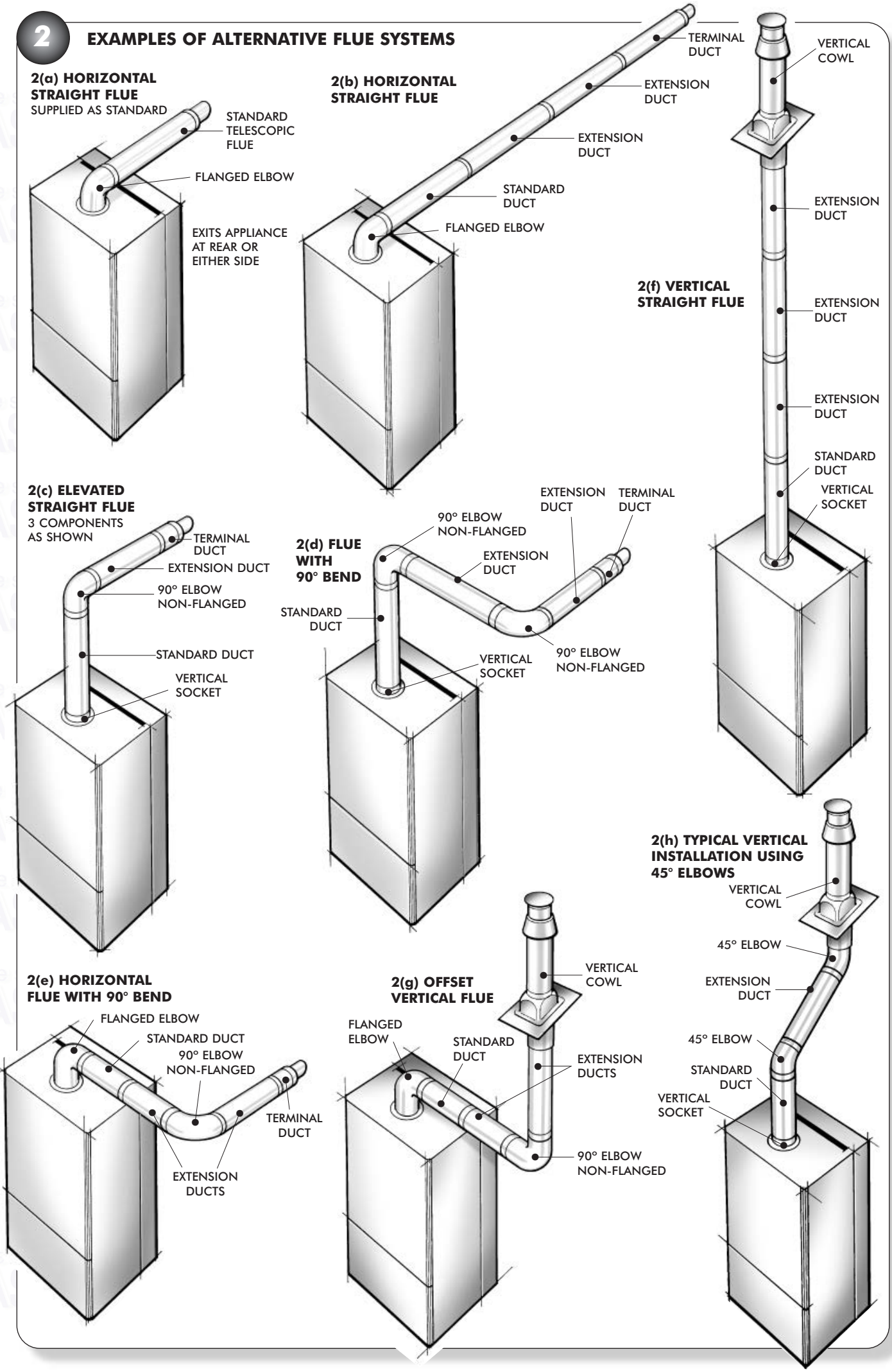

## 2.5 AIR/FLUE DUCT SPECIFICATIONS

The appliance is supplied complete with a standard telescopic flue kit. This comprises a standard duct and a terminal duct and can be used for flue lengths between 506mm and 820mm without cutting the ducts.

The following additional concentric kits are available as optional extras.

**Extension duct** (each extension extends the flue length by up to 767 mm)

**90° Elbow** (Allows an additional bend in the flue and has an 'equivalent length' of 767 mm.) This elbow is mechanically different from the flanged elbow supplied as standard with the appliance, but has the same equivalent length of 767mm.

**45° Elbow** (Allows an additional bend in the flue and has an 'equivalent length' of 384 mm.) This elbow is mechanically different from the flanged elbow supplied as standard with the appliance, but has the same equivalent length of 384mm.

**Socket** (for use with elevated horizontal flues and vertical cowls)

**Vertical Cowl Kit.** (For use where an external wall is not available)

These optional kits may be used with the standard flue kit to produce an extensive range of flue options. Examples are illustrated in Figure 2. Variations upon these illustrations may be used providing that the following rules are strictly obeyed.

**a)** Please refer to the following diagrams to select your particular flue application and work out your parts requirement.

**b)** The maximum permissible allowable length of the flue system is:
3045mm (120in) Horizontal terminal
3633mm (143in) Vertical terminal

*continued on page 5*

## 3 SPECIFICATION FOR STANDARD AND EXTENDED STRAIGHT FLUES

(Refer to section 2.5(b) for maximum allowable lengths)

3(a)

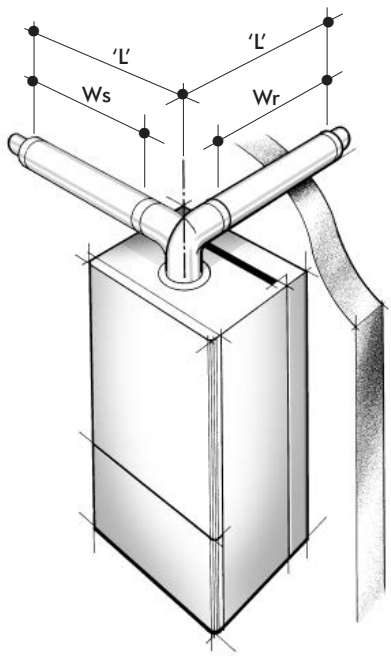


**Fig 3a - Standard flue assembly using either side or rear outlet.**
Flue length 'L' (measured from the boiler outlet centre line to the outside wall face) = max 820mm
Maximum wall thickness Wr (Rear outlet) = 620mm max
Maximum wall thickness Ws (either side outlet) = 590mm max.
(Allowing for minimum clearance of 5mm)

3(b)

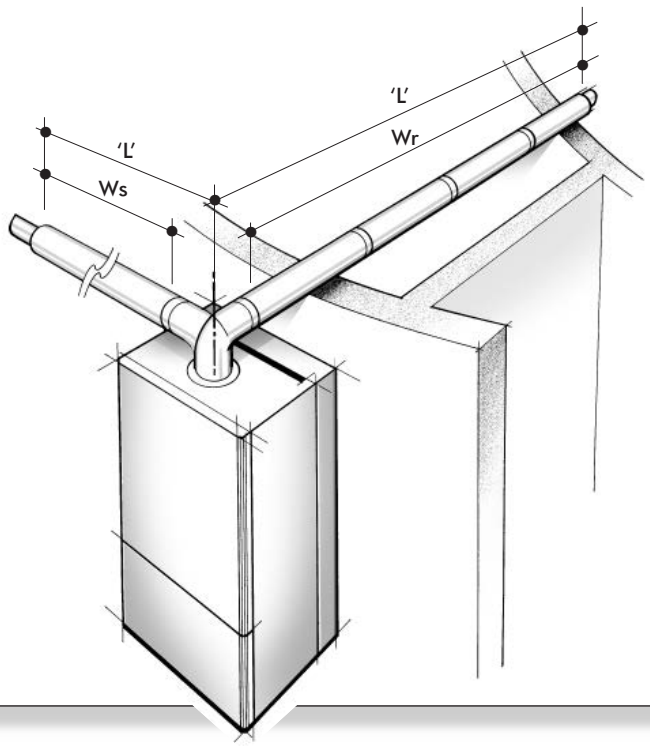


**Fig 3b - Standard flue assembly with optional straight extensions using either side or rear outlet**
Refer to the following table:
(Definitions of lengths 'L', Wr and Ws are as given in the table below

| NUMBER OF EXTENSION KITS | LENGTH L'' | Wr (REAR) | Ws (SIDE) |
|---|---|---|---|
| ONE | 1587 | 1387 | 1357 |
| TWO | 2354 | 2154 | 2124 |

## 4 SPECIFICATION FOR FLUE SYSTEMS WITH AN EXTRA 90° ELBOW

(Refer to section 2.5(b) for maximum allowable lengths)

4(a)

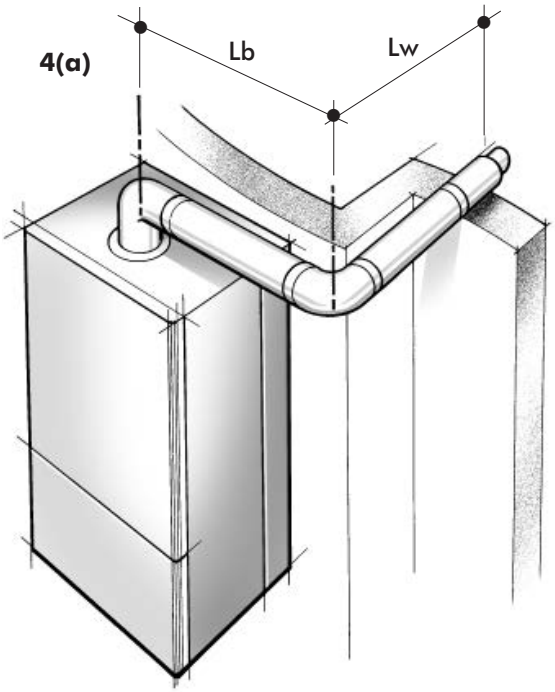


**Fig 4a - Use of the flanged elbow, one extension kit, 90° elbow, and standard flue assembly.**

**Equivalent Length Shown is 3045mm Where 'Lb' is 919mm and 'Lw' is 820mm**

(Lw is measured to the outside wall face.)

4(b)

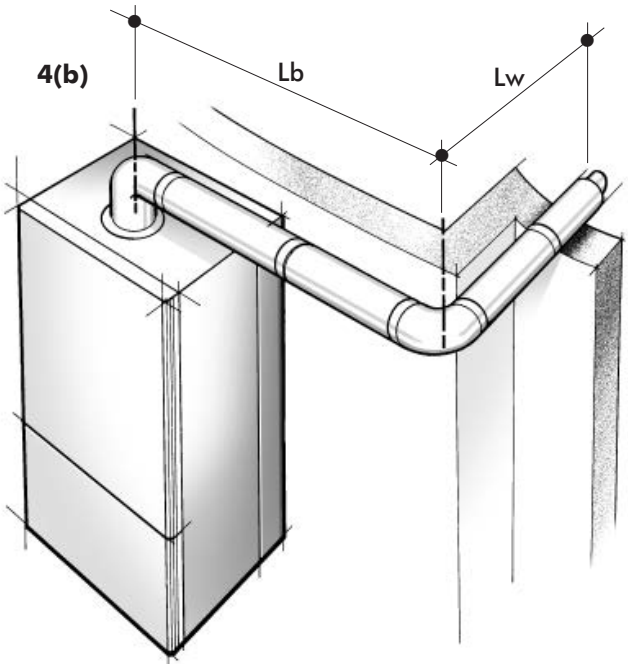


**Fig 4b - As 4a but with one additional extension in length 'Lb'**

**Equivalent Length Shown is 3812mm Where 'Lb' is 1686mm and 'Lw' is 820mm**

(Lw is measured to the outside wall face.)

4(c)

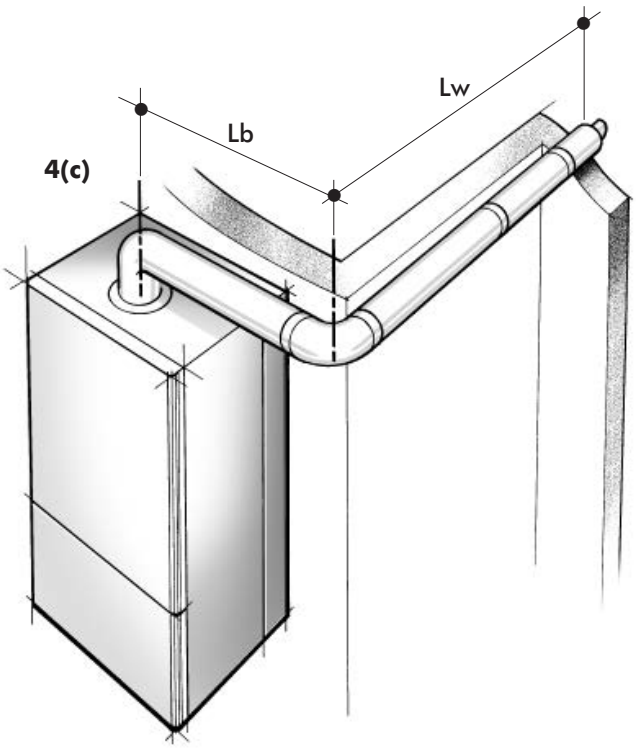


**Fig 4c - As 4a but with one additional extension in length 'Lw'**

**Equivalent Length Shown is 3812mm Where 'Lb' is 919mm and 'Lw' is 1587mm**

(Lw is measured to the outside wall face.)

**c)** The standard terminal must always be fitted horizontally. The vertical terminal must always be used if a vertical outlet is required.

**d)** The flue must only terminate in a horizontal or vertical position. However 90° flue elbows may be used to drop the height of the flue system by 500mm.

**e)** The flue system must use either a flanged elbow or a flanged socket at the entry/exit to the appliance.

**f)** All joints must be correctly made and secured in accordance with the installation instructions.

Refer to Figures 3 to 7 to determine which option kits are required before commencing the installation.

Installation instructions for installing the appliance with a standard flue and straight extension ducts (Fig. 3) are included in the main text of these instructions (section 4.5). Additional instructions for flue systems incorporating an additional elbow (Fig. 4), elevated flue (Fig. 5), an additional elbow and an elevated flue (Fig. 6) and vertical outlet (Fig. 7) are given in the supplements at the rear of this booklet.

## 5 SPECIFICATION FOR FLUE SYSTEMS WITH AN ELEVATED FLUE SYSTEM

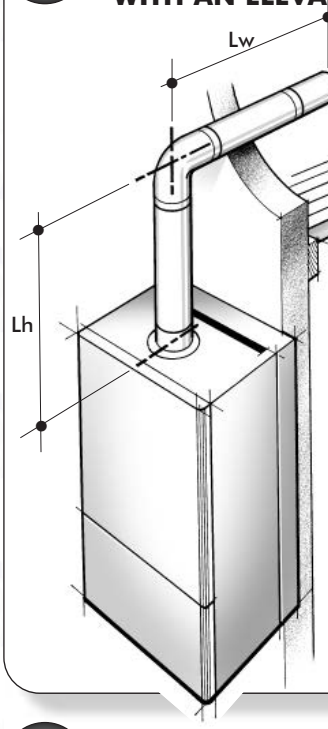


(Refer to Section 2.5 (b) for maximum allowable lenths)

**Fig 5 - Use of the flanged socket, 90° elbow, standard flue assy, &1 extension (Equivalent length shown is 2325mm)**

Where 'Lh' (measured from the top of the boiler casing to the centre line of the extra elbow) = 551mm and length 'Lw' (measured from the centre line of the extra elbow to the outside wall face) = 1162mm

NOTE: *Further extension kits may be used in either length Lh or Lw. Provided that the maximum equivalent length is not exceeded.*

## 6 SPECIFICATION FOR FLUE SYSTEMS WITH AN ELEVATED FLUE SYSTEM INCORPORATING BENDS

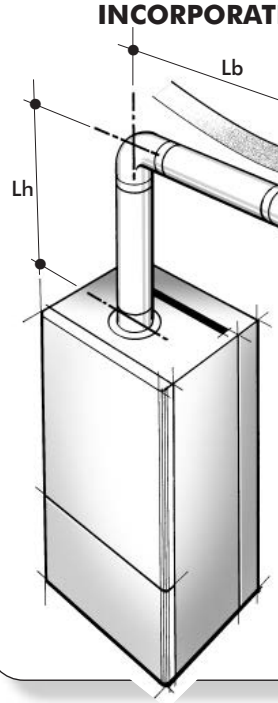


(Refer to Section 2.5 (b) for maximum allowable lenths)

**Fig 6 - (Equivalent length shown = 3862mm)**

Where length 'Lh' (measured from the top of the boiler casing to the centre line of the extra elbow) =551mm and length 'Lb' (measured from the centre line of the extra elbow to the outside wall face)= 919mm and length 'Lw' (measured from the centre line of the extra elbow to the outside wall face) = 1162mm

## 7 SPECIFICATION FOR VERTICAL FLUE SYSTEMS

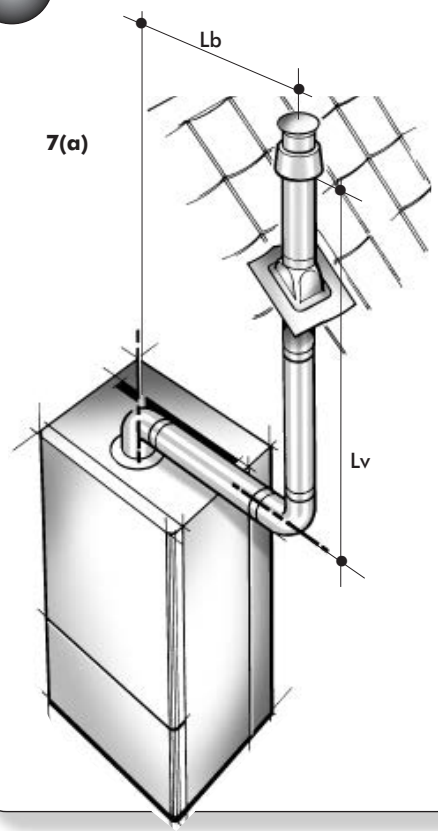


**Fig 7(a) - Offset vertical flue (Equivalent length shown = 3801mm)**

Maximum length 'Lb' (Measured from the boiler outlet centre line to the centre line of the extra elbow) = 1686mm (Lb shown = 919mm)

Length shown 'Lv' (measured from the centre line of the extra elbow to the underside of the air inlet cowel)= 1576mm

Lb + Lv must not exceed Lh.

**Fig 7(b) Vertical extensions only:** vertical socket, standard duct, and vertical cowl and adaptors with extension ducts as required.

Dimensions as follows:

Maximum length 'Lh'

Measured from the top of the appliance to the underside of the air inlet cowel.

| NUMBER OF EXTENSION 'L' KITS | FLUE LENGTHS Lh |
|---|---|
| NONE | 1550 |
| ONE | 2317 |
| TWO | 3084 |
| THREE | 3852 |

Note: A total vertical height of 3633mm is the maximum permissible and is obtained by shortening one of the extensions.

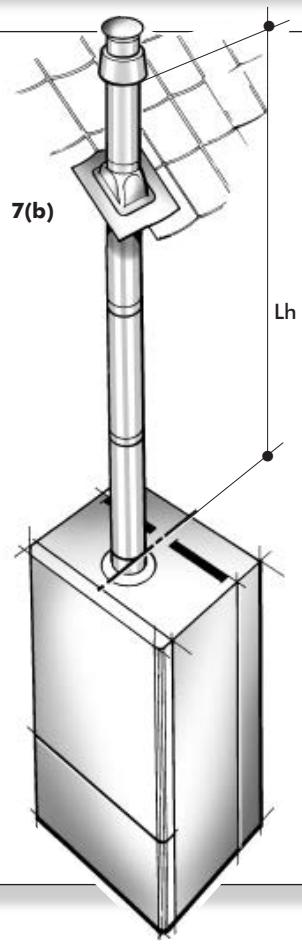

# 8 EXPLOADED DIAGRAM

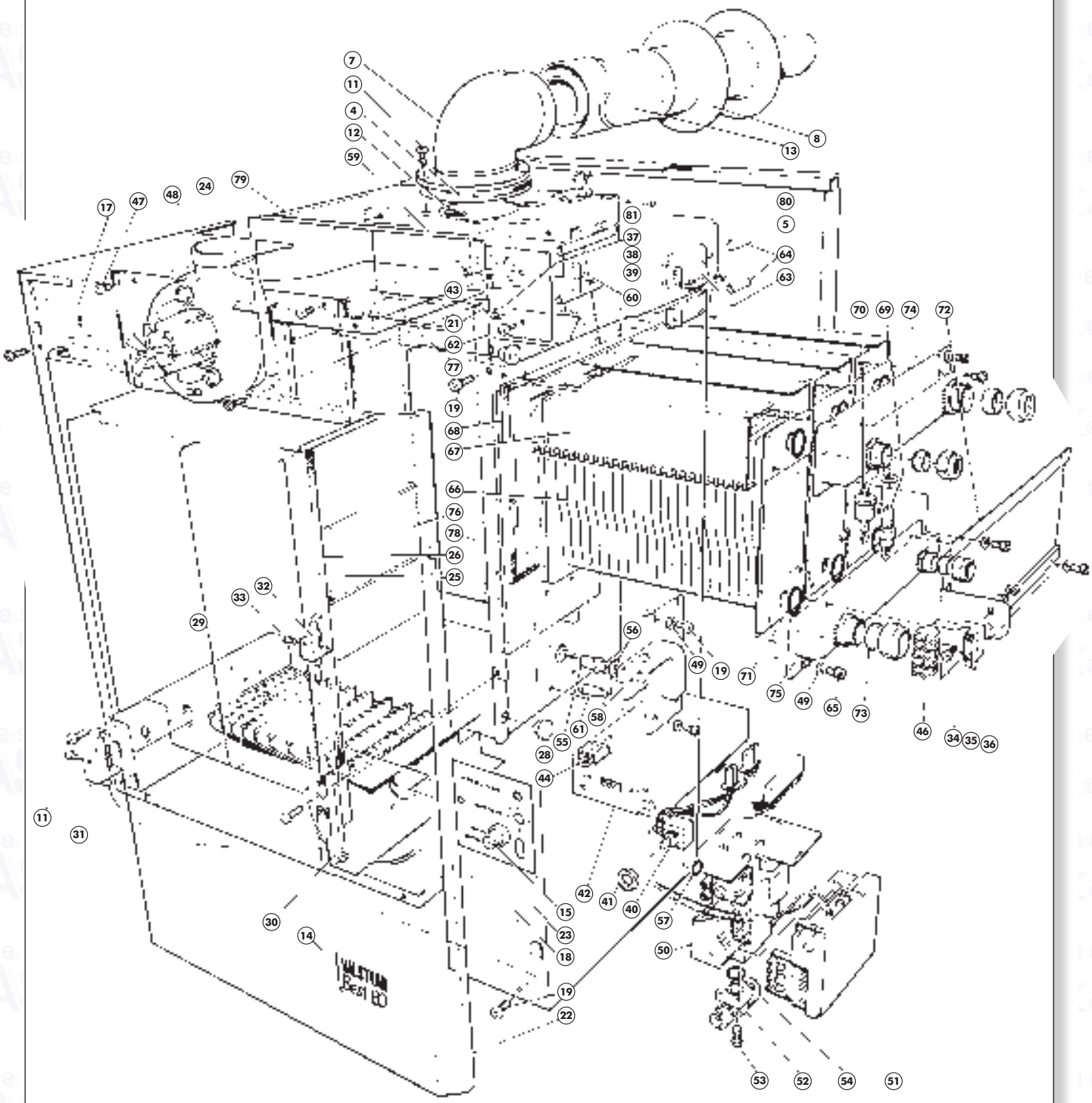


Drawing amended 7/05/99

# 3 INSTALLATION REQUIREMENTS

## 9 FLUE TERMINAL POSITION

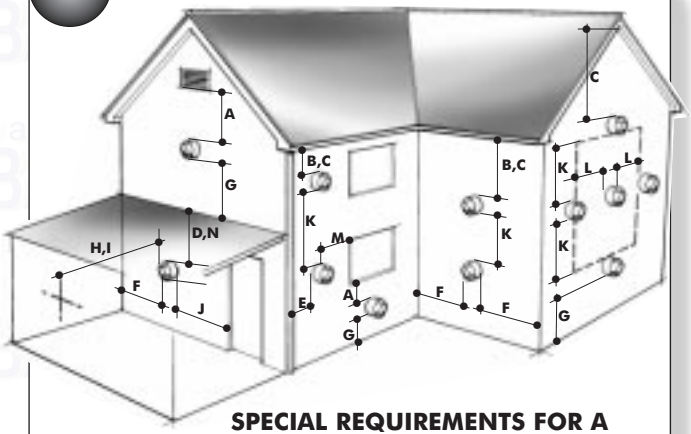


**SPECIAL REQUIREMENTS FOR A VERTICALLY BALANCED FLUE**

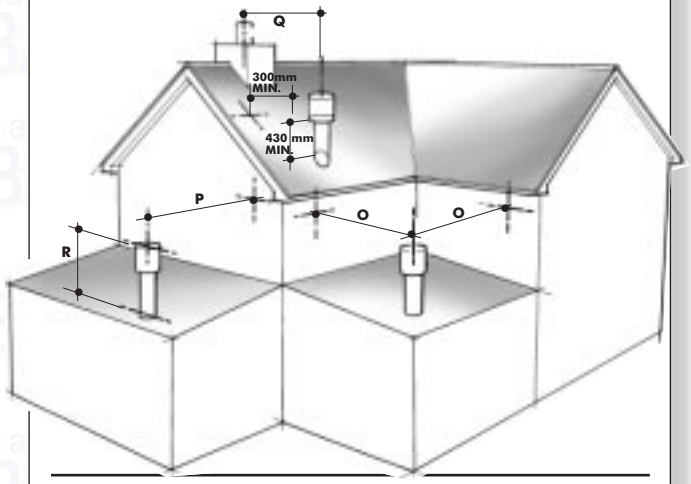


| | Position | Minimum spacing | |
|---|---|---|---|
| **A** | Directly below an openable window, air vent, or any other ventilation opening | 300mm | 12in |
| **B** | Below gutter, drain/soil pipe | 75mm | 3in |
| **C** | Below eaves | 200mm | 8in |
| **D** | Below a balcony | 200mm | 8in |
| **E** | From vertical drain pipes and soil pipes | 75mm | 3in |
| **F** | From internal or external corners | 300mm | 12in |
| **G** | Above adjacent ground or balcony level | 300mm | 12in |
| **H** | From a surface facing the terminal | 600mm | 24in |
| **I** | Facing terminals | 1200mm | 48in |
| **J** | From opening (door/window) in carport into dwelling | 1200mm | 48in |
| **K** | Vertically from a terminal on the same wall | 1500mm | 60in |
| **L** | Horizontally from a terminal on the same wall | 300mm | 12in |
| **M** | Adjacent to opening | 300mm | 12in |
| **N** | Below carport | 600mm | 24in |
| **O** | From adjacent wall | 300mm | 12in |
| **P** | From adjacent opening window | 1000mm | 40in |
| **Q** | From another terminal | 600mm | 24in |
| **R** | Minimum height | 300mm | 12in |

## 3.1 STATUTORY REQUIREMENTS

SAFETY (INSTALLATION AND USE) REGULATIONS 1984 (AS AMENDED). It is the law that all gas appliances are installed by a registered person, in accordance with the above regulations. Failure to install appliances correctly could lead to prosecution. It is in your own interest, and that of safety, to ensure that the law is complied with.
In addition to the above regulations, this appliance must be installed in accordance with the current IEE Wiring Regulations for electrical installation, local building regulations, the Building Standards (Scotland) (Consolidation) Regulations, bye laws of the local water undertaking and Health and Safety Document No. 635 The Electricity at Work Regulations 1989.
It should also be in accordance with the relevant recommendations in the current editions of the following British Standards and Codes of Practice: BS5449:1, BS5546, BS5440:1, BS5440-.2, BS6798, BS6891, BG.DM2 and BS7074
**IMPORTANT NOTE:** Manufacturer instructions must NOT be taken in any way as overriding statutory obligations.

## 3.2 BOILER LOCATION

**The following limitations MUST be observed when siting the boiler:**

**a)** The boiler is not suitable for external installation. The position selected for installation should be within the building, unless otherwise protected by a suitable enclosure, and MUST allow adequate space for installation, servicing, and operation of the appliance, and for air circulation around it. (Section 2.4 and 3.4)

**b)** This position MUST allow for a suitable flue system and terminal position. (Section 2.5 and 3.3) The boiler must be installed on a flat vertical wall which is capable of supporting the weight of the appliance and any ancillary equipment.

**c)** If the boiler is to be fitted in a timber framed building it should be fitted in accordance with the British Gas publication 'Guide for Gas Installations In Timber Frame Housing', Reference DM2. If in doubt, advice must be sought from the Local Gas Region.

**d)** If the appliance is to be installed in a room containing a bath or a shower, any electrical switch or control utilising mains electricity must be so situated that it cannot be touched by a person using the bath or shower. Attention is drawn to the requirements of the current I.E.E. Wiring Regulations, and in Scotland the electrical provisions of the Building Regulations applicable in Scotland.

**e)** A compartment used to enclose the appliance MUST be designed and constructed specifically for this purpose. An existing cupboard, or compartment, may be used provided it is modified accordingly. BS 5376:2 gives details of the essential features of cupboard / compartment design, including airing cupboards.

**f)** Where installation will be in an unusual location, special procedures may be necessary. BS 6798 gives detailed guidance on this aspect.

## 3.3 FLUE TERMINAL POSITION

Detailed recommendations for flue installation are given in BS 5440:1. The following notes are for general guidance.

**a)** The boiler MUST be installed so that the terminal is exposed to the external air.

**b)** It is important that the position of the terminal allows free passage of air across it at all times.

**c)** It is ESSENTIAL TO ENSURE that products of combustion discharging from the terminal cannot re-enter the building, or any other adjacent building, through ventilators, windows, doors, other sources of natural air infiltration, or forced ventilation / air conditioning.

**d)** The minimum acceptable dimensions from the terminal to obstructions and ventilation openings are specified in Fig.9.

**e)** If the terminal discharges into a pathway or passageway check that combustion products will not cause nuisance and that the terminal will not obstruct the passageway.

**f)** Where the lowest part of the terminal is fitted less than 2m (78ins) above ground, above a balcony or above a flat roof to which people have access, the terminal MUST be protected by a purpose designed guard. (Available as an optional extra)

**g)** Where the terminal is fitted within 850mm (34in) of a plastic or painted gutter, or 450mm (18in) of painted eaves, an aluminium shield at least 750mm long must be fitted to the underside of the painted surface.

**h)** The air inlet / flue outlet duct MUST NOT be closer than 25mm (1in) to combustible material.

**i)** In certain weather conditions the terminal may emit a plume of steam. This is normal but positions where this would cause a nuisance should be avoided.

**j)** It is recommended that the flue pipe should have a slight fall away from the boiler towards the terminal.

## 3.4 VENTILATION REQUIREMENTS

Detailed recommendations for air supply are given in BS5440:2. The following notes are for general guidance.

**a)** It is not necessary to have a purpose provided air vent in the room or internal space in which the appliance is installed.

**b)** If the boiler is installed in a cupboard or compartment, permanent air vents are required for cooling purposes in the cupboard or compartment at both high and low levels. Both air vents must communicate with either the same internal room/space or be on the same wall to external air. Each air vent communicating with another room or internal space must have a minimum effective area. See table below.

**Minimum Area Requirements cm² (in²) For Compartment Air Ventilation.**

| Best | Air from another room High & Low level | Air direct from outside High & Low level |
|---|---|---|
| 80 | 264cm (42in) | 132cm (20in) |

## 3.5 GAS SUPPLY

**a)** The Local Gas Supplier should be consulted at the installation planning stage in order to establish the availability of an adequate supply of gas.

**b)** An existing service pipe MUST NOT be used without prior consultation with the Local Gas Supplier.

**c)** A gas meter can only be connected by the Local Gas Supplier or by a Local Gas Region Contractor.

**d)** An existing meter should be of sufficient size to carry the maximum boiler input plus the demand of any other installed appliance. (BS6891: 1988). See section 2.2 General Data for the gas required for each specific model. A minimum of 22mm dia. pipework to within 1 metre of the appliance gas cock.

**e)** The governor at the meter must give a constant outlet pressure of 20mbar (8 in.wg) when the appliance is running.

**f)** The gas supply line should be purged. WARNING: Before purging, open all doors and windows, also extinguish any cigarettes, pipes, and any other naked lights.

**g)** The complete installation must be tested for gas soundness.

## 3.6 ELECTRICAL SUPPLY

The mains supply required is 230V - 50 Hz fused at 3A, via a fused double pole isolator with a contact separation of at least 3 mm in both poles. This should be a permanent connection to the fixed wiring of the system.

There must be only one common isolator for the boiler and its control system, and it must provide complete electrical isolation.

The power supply cable to the appliance should be at least 0.75 mm² (24 x 0.2 mm) PVC heat resistant, as specified in table 16 of BS6500.

All external wiring to the boiler must be in accordance with the latest I.E.E. Wiring Regulations, and any local regulations which apply.

**The appliance must be earthed.**

In the event of an electrical fault after installation of the appliance, preliminary electrical systems checks must be carried out i.e. Earth Continuity, Short Circuit, Polarity, and Resistance to Earth.

All fuses must be ASTA approved to BS1362.

## 3.7 WATER SYSTEMS

The boiler must not be used for direct hot water supply. The hot water cylinder must be of the fully indirect (double feed) type, Self priming (single feed) cylinders MUST NOT BE USED.

The boiler is supplied with fittings necessary for use with copper tubing to BS2871 on fully pumped systems, and combined pumped CH and gravity DHW systems. It is important that the appropriate fittings are correctly used.

'Street' elbows must also be used for the 28mm gravity connections to the boiler to provide adequate clearance for fitting the right hand inner case.

Drain off cocks must be fitted at the lowest points of the system.

If the position of the boiler is such that it may be vulnerable to freezing it should be protected as specified in the current issue of BS5422. It is recommended that a frost protection thermostat is fitted.

The pump, with its isolation valves, should be fitted in the heating flow pipework from the boiler. It should be set to produce a temperature difference of 11°C between the flow and return pipes on the boiler. The resistance through the appliance at the required flow rate, may be found in Section 2.3.

## 3.7.1 OPEN VENTED SYSTEMS

An open vent pipe of 22mm diameter must be fitted in the boiler flow and terminated above the cold feed, discharging into the expansion cistern. The open vent must rise continuously from its connection with the system.

The expansion cistern should not have a smaller capacity than 22 litres, (5 gallons).

The cold feed should be of 15mm minimum diameter.

The expansion cistern should have a lid to prevent evaporation loss.

The cistern must not be higher than 30m (100ft) above the boiler, or less than 1.2m (47in).

## 10 PIPE LAYOUT USING BY-PASS AND CLOSE COUPLED FEED AND VENT (fully pumped)

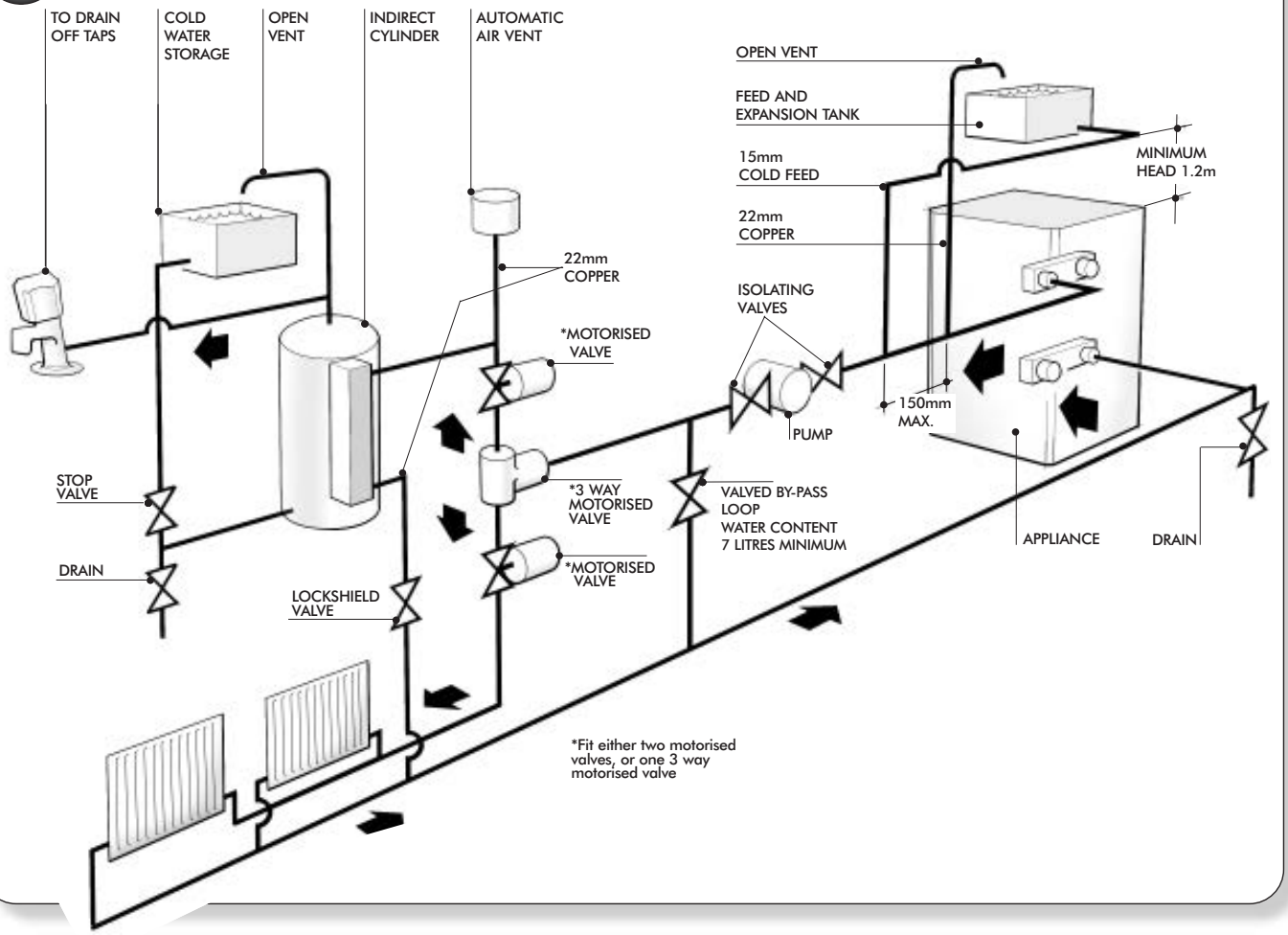


## 11 SCHEMATIC PIPE LAYOUT FOR COMBINED GRAVITY DHW AND PUMPED CH (Showing 2 Zone Valves and By-Pass Loop)

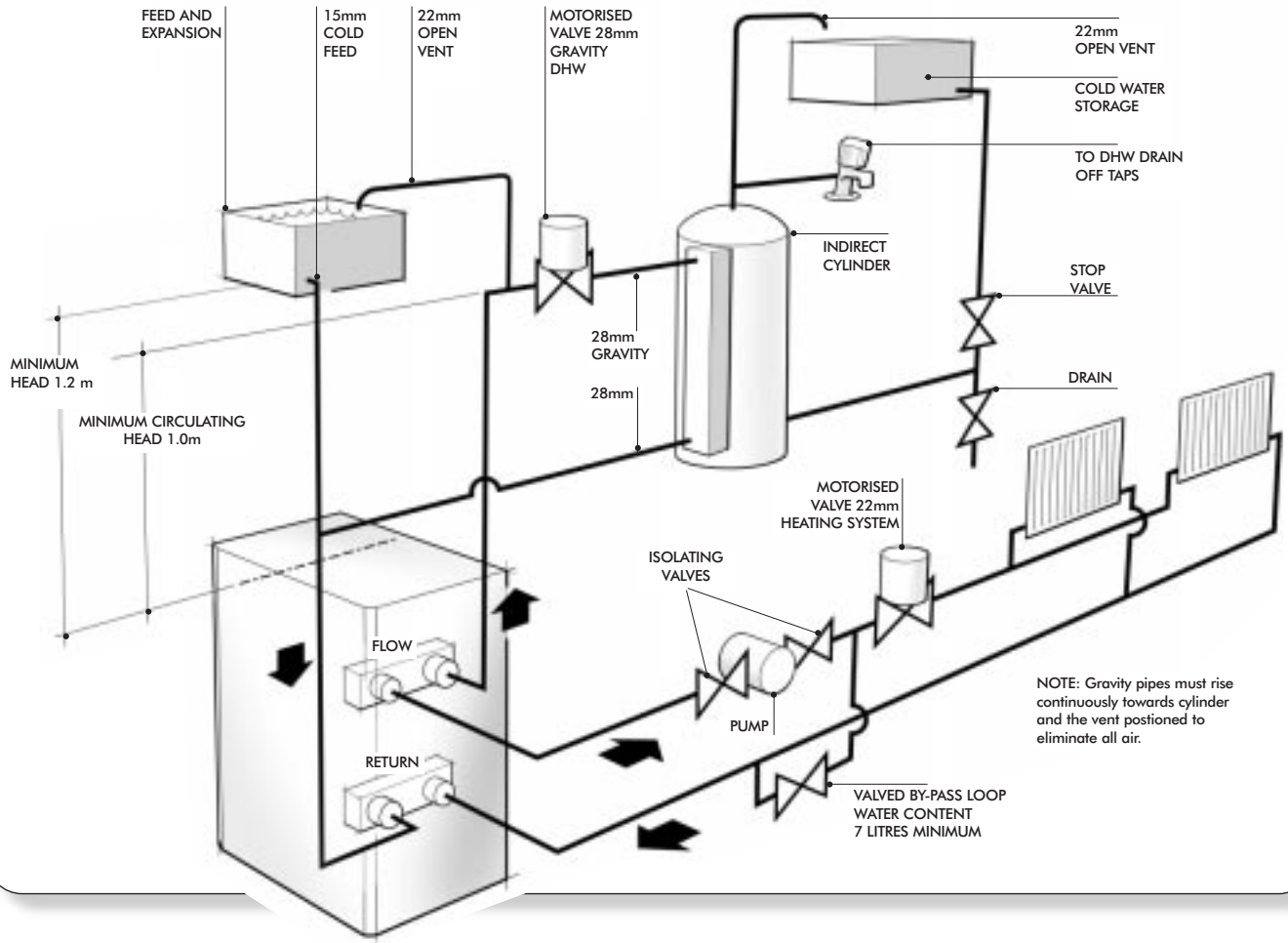

## 3.7.1.1 FULLY PUMPED

The combined heating and hot water flow must be connected to the top manifold, use either the 22mm or 28mm connections. The open vent may be connected to the un-used connection on the top manifold. (Refer to Fig. 10)

The combined heating and hot water return must be connected to the bottom manifold, use either the 28mm or 22mm connections. The cold feed may be connected to the un-used connection on the bottom manifold.

## 3.7.1.2 COMBINED PUMPED CH & GRAVITY DHW SYSTEMS

The primary flow and return pipework between the boiler and the hot water cylinder must be 28mm and be connected to the 28mm connections, the flow to the top manifold and the return to the bottom manifold. (Refer to Fig. 11)

'Street' elbows, **must** be used for the 28mm gravity connections to the boiler to provide adequate clearance for fitting the right hand inner case.

The central heating flow **must** be connected to the 22mm connection on the top manifold.

The central heating return **must** be connected to the 22mm connection on the bottom manifold to ensure correct operation of the integral injector system.

Gravity systems require a minimum circulating head of 1m where there is no horizontal pipe run. An increase in circulating head of 0.5m is required for each 1m of horizontal run.

***Note:*** *Gravity runs near the minimum circulating head may result in prolonged cylinder recovery.*

***Note:*** *It is recommended that when used on a gravity domestic hot water application a Honeywell "C Plus" plan or equivalent is fitted to the system to give suitable control over the domestic hot water temperature. The cylinder thermostat should be set* **NO** *higher than 60°C. The Honeywell "C Plus" will allow the pump overrun to operate (should it be necessary) without warming the radiators when the domestic hot water only is on. The bypass should have the same water volume, 7 litres minimum, but should* **NOT** *incorporate any radiators. The flow sensing temperature is limited to 6O°C in the gravity mode, when the CH pump is off. This is to prevent the DHW cylinder from overheating.*

## 3.7.2 SEALED SYSTEMS

**Safety Valve:** A safety valve complying with the requirements of BS759 must be fitted to the flow pipe as near as possible to the boiler with no restriction in the flow before the valve. (Refer to Fig. 12)

The valve should be fitted by a horizontal or vertically upwards connection and accessible for testing.

The valve should be so positioned so that any discharge of steam or water cannot cause any harm to occupants or electrical installations.

**Pressure Gauge:** A pressure gauge with a range of 0-4 bar must be fitted so that it is visible to the person filling the system.

VOLUME OF WATER IN APPLIANCE = 3.0 litre.

| | | | | |
|---|---|---|---|---|
| Vessel Charge & Initial System Pressure | bar | 0.5 | 1 | 1.5 |
| | psi | 7.3 | 14.5 | 21.8 |
| For expansion vessel capacity, multiply system volume by: | | 0.0833 | 0.109 | 0.156 |

**Expansion Tank:** The expansion tank must be of the diaphragm type and should be connected close to the inlet side of the pump. The expansion vessel must suit the volume of the system - BS5449:1:1977, clause 25.

**Halstead Boilers manufacture a Sealed System Pod that fits directly below the appliance. This incorporates an expansion vessel, pump, pressure relief valve with interconnecting pipe work.**

**12 SEALED WATER SYSTEM**

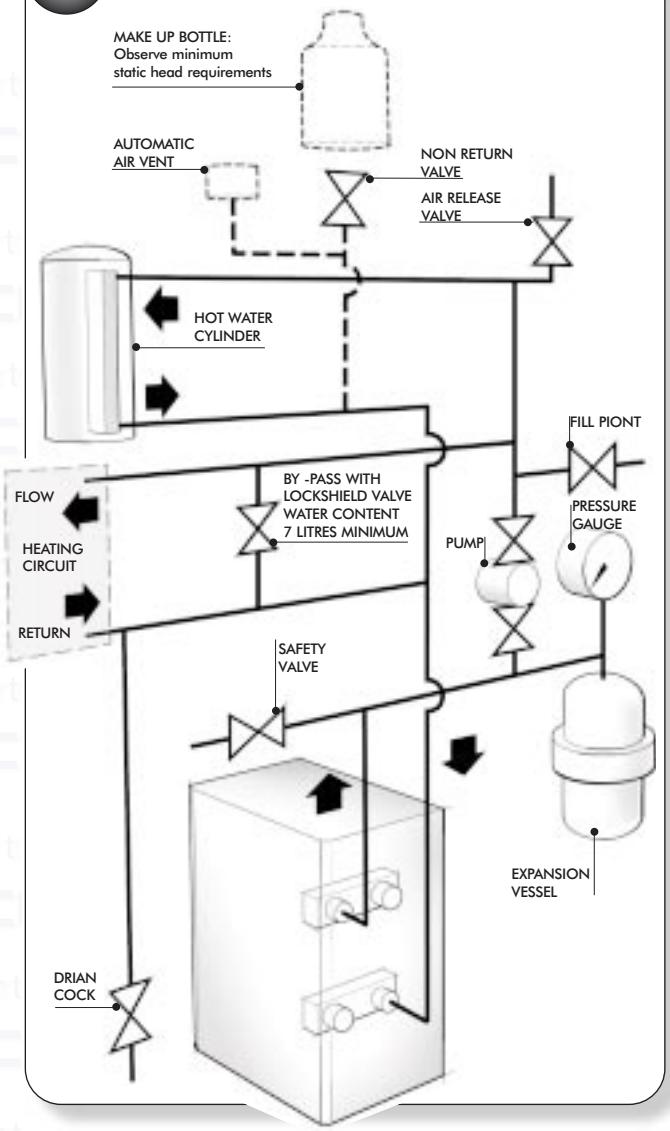


The system pressure should be not less than the static height, this being the highest point in the system above the expansion tank.

The expansion vessel has to be suitable to accommodate the change in volume of the water in the system when heated between 10°C to 110°C. See BS5449:1 for further information.

**Hot Water Cylinder:** The cylinder used should be of the indirect type, suitable to operate at a total pressure of 0.35 bar (5 lb/in$^2$) plus the pressure at which the safety valve is set.

Do Not Use A Single Feed Indirect Cylinder.

**Filling Point:** The system must be provided with a low level filling point fitted with a stop cock. The method adopted for filling the system should comply with local Water Authority regulations.

Provisions should be made for replacement of system water losses by using a make-up vessel which must be fitted above the highest point in the system, or by pre-pressurising the system.

Refer to BS5376:part 2:1976 clause 14.3.5.

# 4 INSTALLING THE APPLIANCE

## 4.1 UNPACKING THE APPLIANCE

The appliance and standard flue kit is supplied in a single cardboard carton. In addition various optional flue kits are available as described in section 2.5. If the appliance is to be installed without access to the outside wall, a wall liner kit is also required.
Open the carton. Unpack the appliance, flue pack and any option kits and check the contents against the following lists.

**BOILER PACKAGE:**

- Boiler (Assembled.)
- Installation, Servicing and Users instructions.
- Wall mounting template.
- Plastic bags containing:
  - 6 x Fixing screws.
  - Flue Turret Gasket.
  - 2 x Split Pins.
  - 6 x Rawl plugs.
  - 2 x 28mm olives.
  - 4 x screws for Flue turret.
  - Control knob.

**FLUE COMPONENTS:**

- Inner wall sealing ring. (white).
- Telescopic flue assembly.
- Outer wall sealing ring (grey).
- Flue turret elbow.
- 4 Self tapping screws.
- 60mm dia. 'O' ring for turret (fitted).

**13 WALL MOUNTING TEMPLATE**

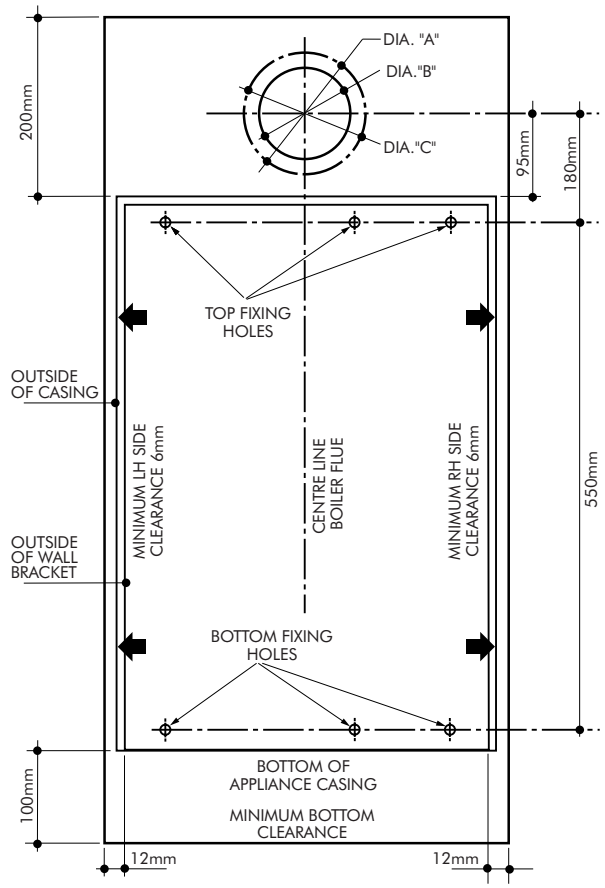


Dia 'A' Hole diameter 130mm if optional wall liner kit is to be used for fitting flue/air duct from inside the room.
Dia 'B' Hole diameter 100mm if duct is to be fitted from outside.
Dia 'C' Hole diameter to suit alternative wall liner (supplied by installer) with an inside diameter between 127mm & 140mm.

## 4.2 PREPARING THE WALL

Before installing the appliance ensure that the chosen location is suitable (Section 3.2) and that the requirements for flue position, (Section 3.3), & minimum clearances, (Section 2.4) are satisfied. These minimum clearances are essential to provide access for servicing, and are included on the wall mounting template.

**a)** Take the template (Fig. 13) and tape the template onto the wall in the desired position. (Ensuring that the centre line is level).

**b)** Mark the position of the six wall mounting bracket fixing holes.

**c)** **REAR OUTLET ONLY:**. If the installation is to use a rear outlet, mark the position of the air/flue duct hole (from the template) onto the rear wall.

**14 MARKING THE POSITION OF A SIDE FLUE**

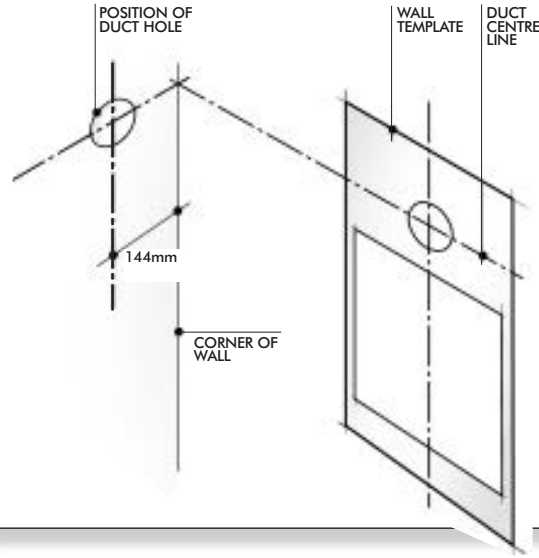


**d)** **SIDE OUTLET ONLY:** If the installation is to use a LH or RH side outlet, mark the position of the centre line of the air/flue duct hole (from the template) onto the rear wall. Extend this mark horizontally until reaching the side wall face, then draw the position of the air/flue duct hole as detailed in Fig. 14.

**e)** **VERTICAL OUTLET ONLY:** Using the wall template and the dimensional information given in section 2.4 & 2.5. Calculate where the boiler flue should be positioned and make the necessary hole(s) in the ceiling/roof. Proceed to (k).

**f)** **ADDITIONAL ELBOW OR FLANGED DUCT WITH ELBOW:** Using the wall mounting template and the dimensional information given in section 2.4 & 2.5. Calculate where the boiler and flue are to be positioned and make the necessary hole(s) in the wall(s)/ceiling/roof for the air/flue duct. Proceed to (k).

**g)** If the air/flue duct length is to be greater than 2.25m (88 in) it is necessary to fit at least one support in the middle of the duct. A support bracket kit is available as an optional extra. Follow the fitting instructions provided with the bracket before proceeding further.

**h)** Remove the template and check the dimensions between the centre lines of the flue and fixing holes shown in Fig. 13. Drill the fixing holes using a 8mm masonry drill. Fit the plastic plugs provided.

**i)** Cut the hole in the wall for the flue/air duct. The diameter should not be less than 100mm (4in) and must be horizontal. If the hole is not accessible from the outside of the building, its minimum diameter should be sufficient to allow the insertion for the wall liner (130mm (5¼in) diameter) which will be sealed with mortar. Refer to Fig. 20

(The wall liner is available as an optional extra.)

**j)** Accurately measure the wall thickness, and note this dimension for use later.

**k)** Remove wall mounting bracket from back of boiler by releasing over-centre clamps on top rear of boiler

**l)** Secure the wall mounting bracket in position using the screws provided. Ensure that the bracket is the correct way up.

## 4.3 PREPARING THE BOILER

**a)** Remove the front painted door by sliding it towards the top of the boiler and then away from the boiler.

**b)** Remove the right hand portion of the case by unscrewing the two (upper and lower) screws (C) (Fig. 15) and sliding the case away from the appliance.

**c)** Remove the four screws securing the left hand case (D). Remove the case by sliding it forwards away from the appliance.

**15 INNER CASING REMOVAL**

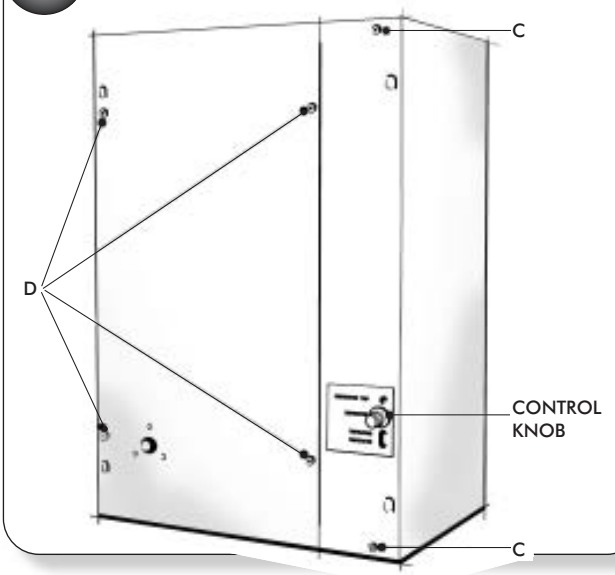


## 4.4 MOUNTING THE BOILER

Lift the boiler into position, the rear bottom edge of the boiler locates onto the bottom return of the wall plate. The top of the boiler is then pushed back against the top of the wall plate and the "over centre" clamps are located in their rectangular holes in the top of the wall plate, clamped in position and secured with the two split pins provided in the fixing kit.

Remove the combustion chamber front panel by pulling it forwards out of the appliance, ensure the four flue baffles are positioned correctly with their top being flat onto the top of the heat exchanger fins (Key No. 67-Fig 8 page 6).

**Remove and discard the wire that retains the heat exchanger baffles.**

Replace the combustion chamber front panel ensuring it is fitted correctly into the two side guides. Refit the left hand case with the four screws previously removed.

## 4.5 AIR FLUE DUCT INSTALLATION

If the wall thickness is less than 800mm (31in) the air/flue duct may be fitted without access to the external wall providing that the optional wall liner is used. (This is necessary to seal any cavity and to allow the sealing ring to pass through from inside but still open and provide an adequate seal). The wall liner has a tube diameter of 130mm with a wall thickness of 0.8mm.

### 4.5.1 PREPARING THE AIR/FLUE DUCTS

**a)** Measure the required flue length as shown in Figure 16. Refer to section 2.5 to determine whether any extension kits are required. Installations using only the standard ducts or standard ducts with straight extensions are described in this section. Installation instructions for all other flue systems are described in the supplements at the rear of this booklet.

**b)** Fit the external sealing ring to the terminal assembly and assemble the air/flue ducts as shown in Figure 17. The standard duct is always used at the entry/exit to the boiler, and the sliding (telescopic) terminal is always slid into the end of the standard or extension duct (where appropriate).

**c)** Achieve the correct flue length using Figure 18 as a guide. Note that the flue length is measured to the inside of the external wall sealing ring. In most cases it will be possible to achieve the required flue length without cutting the ducts, however where necessary the plain ends of the extension ducts may be cut. **Never cut the swaged end**, and always ensure that the cut is square and free of burrs or debris. The minimum overlap of the telescopic section is 50mm (2in).

**d)** Assemble the flue using Figure 19 as a guide. It is important that the steps are carried out in the order stated in Figure 19. When securing the ducts in position always drill two 3.3 mm diameter holes in each extension air duct joint and use the self tapping screws provided to secure each joint.

NOTE IT IS ESSENTIAL THAT THE TERMINAL IS FITTED THE CORRECT WAY UP See Fig 17 (i.e. rainshield at the top).

**16 MEASURING THE EXACT FLUE LENGTH**

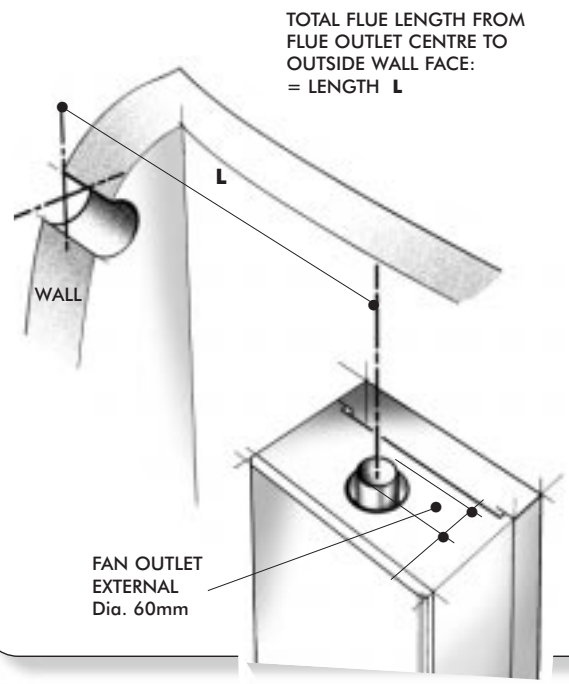

## 17 AIR/FLUE DUCT ASSEMBLY

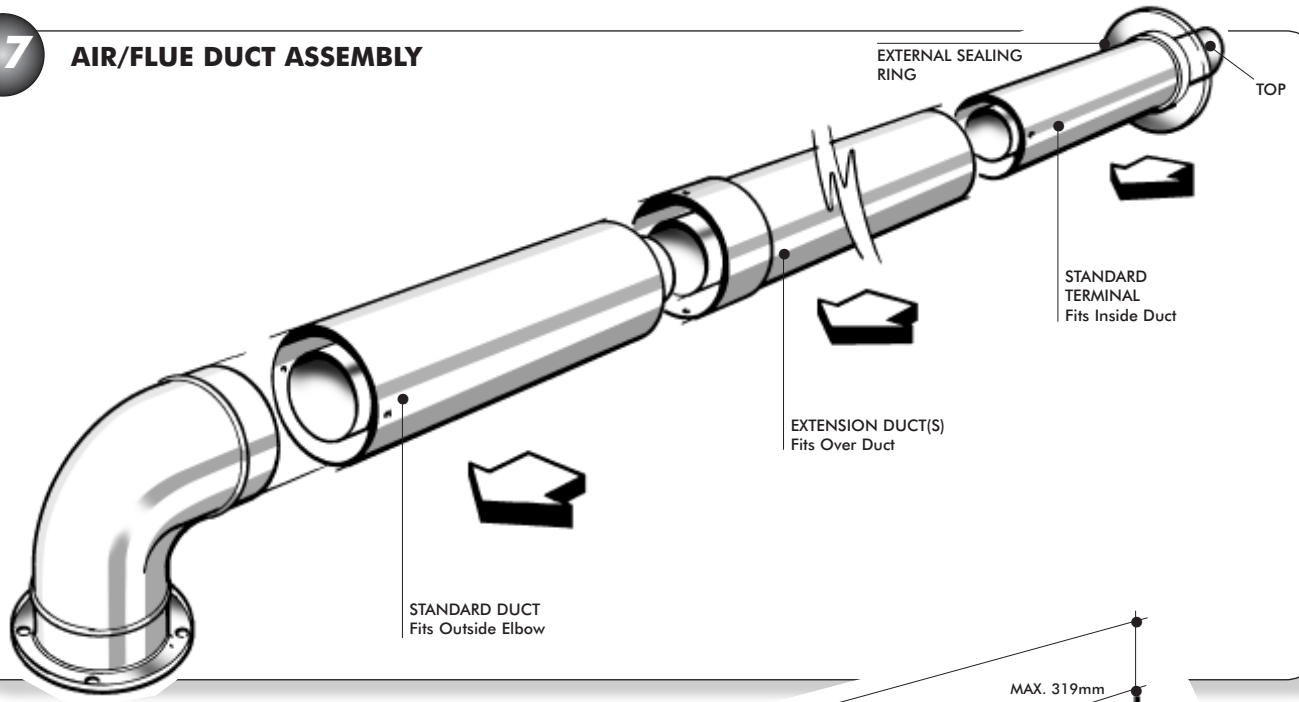


## 18 ACHIEVING THE CORRECT FLUE LENGTH

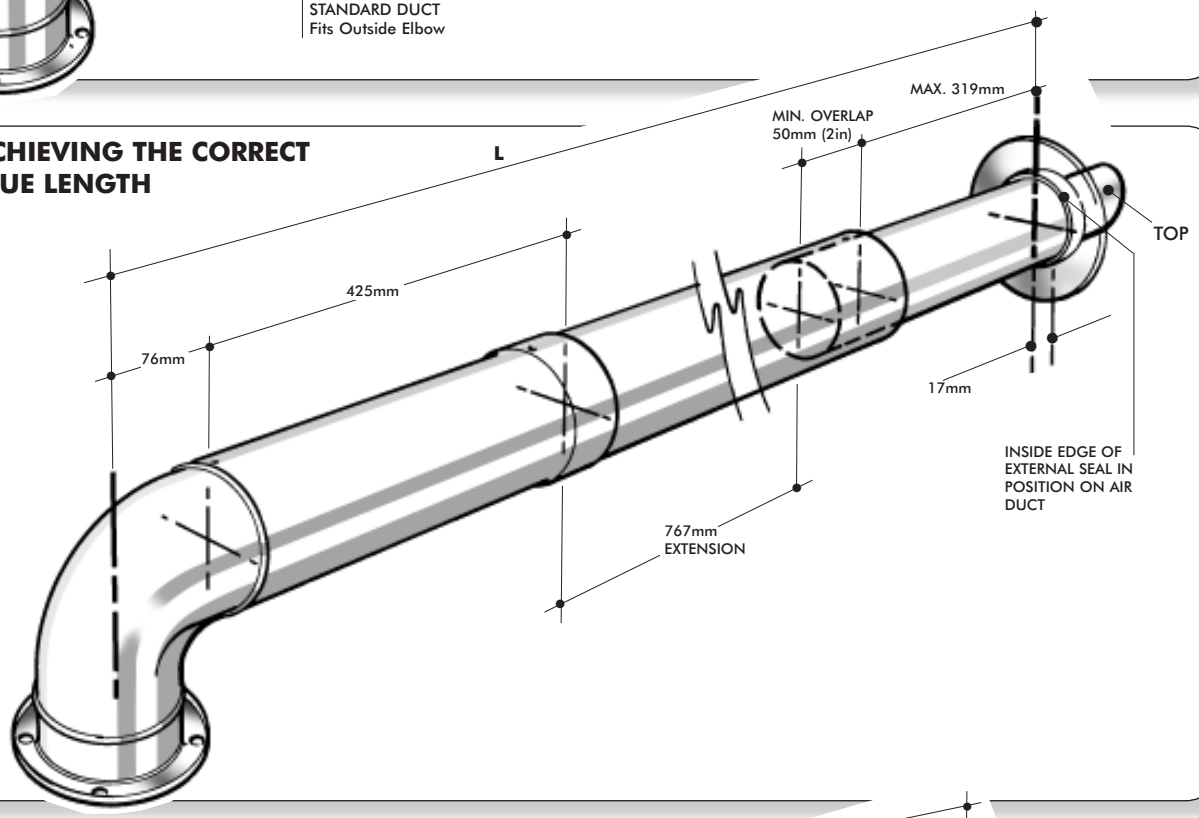


## 19 ASSEMBLING THE FLUE SYSTEM

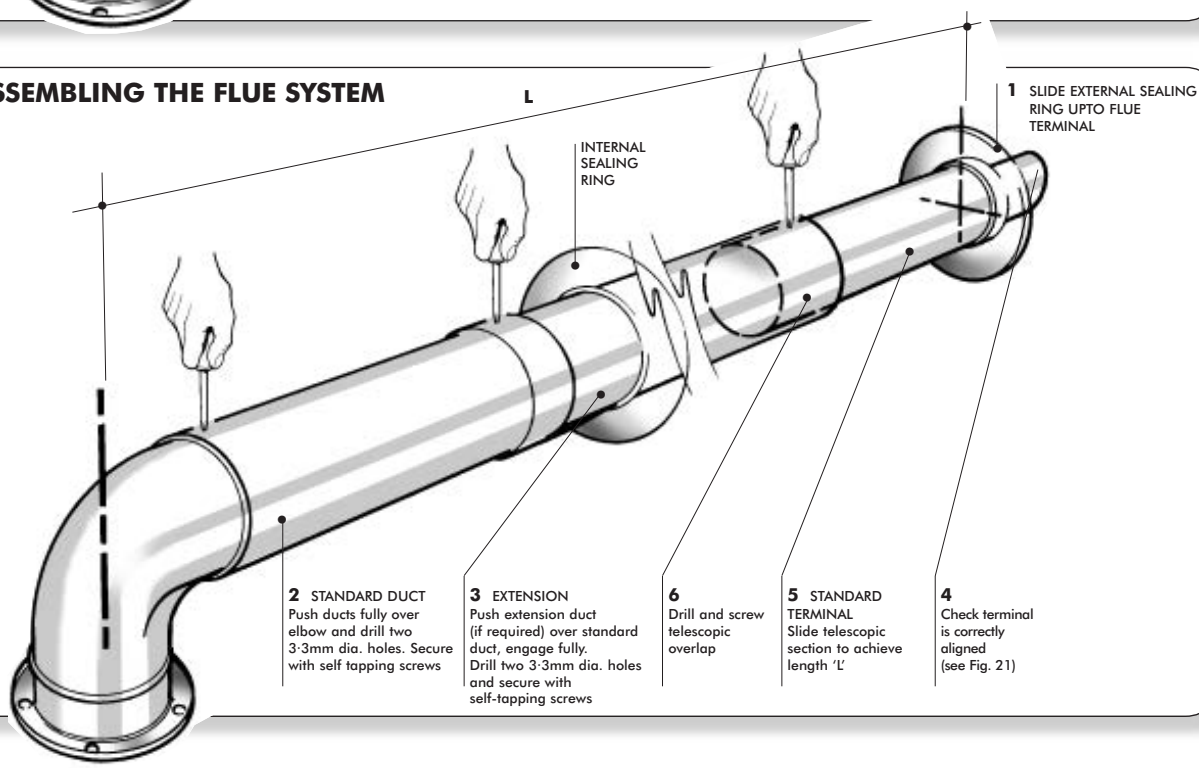

## 4.5.2 INSTALLING THE AIR/FLUE DUCT FROM INSIDE THE ROOM

Wall thickness up to 800mm (31in) only.

**a)** Push the terminal through the wall liner taking care to ensure that the terminal is the correct way round and the external wall sealing ring does not become dislodged.

**b)** Pull the flue system towards the boiler to seat the external sealing ring against the outside wall and secure the elbow to the boiler using the screws provided.

**c)** Finally use the internal sealing ring to make good the internal hole, and check that the terminal is correctly located on the outside wall (Where possible this should be visually checked from outside the building.) Figure 20 shows a view of the flue system, correctly installed.

**d)** Assemble as shown in Figure 20

## 4.5.3 INSTALLING THE AIR/FLUE DUCT FROM OUTSIDE THE BUILDING

(Flue hole diameter 100mm - wall liner not necessary)

**a)** Secure the flue elbow with seal to the appliance using 4 screws.

**b)** From outside the building, push the flue system through the wall taking care to ensure that the terminal is the correct way around.

**c)** Fit the internal wall sealing ring over the inside end of the flue, then fit the air duct to the elbow, drill and secure with the two screws.

**d)** Pull the flue system towards the boiler to seat the external sealing ring against the outside wall.

**e)** Finally use the internal sealing ring to make good the internal hole. Check that the external wall sealing ring is correctly located, on the outside wall from outside the building. Figure 21 shows a view of the flue system, correctly installed.

**20** **INSTALLING THE FLUE SYSTEM FROM INSIDE THE ROOM**

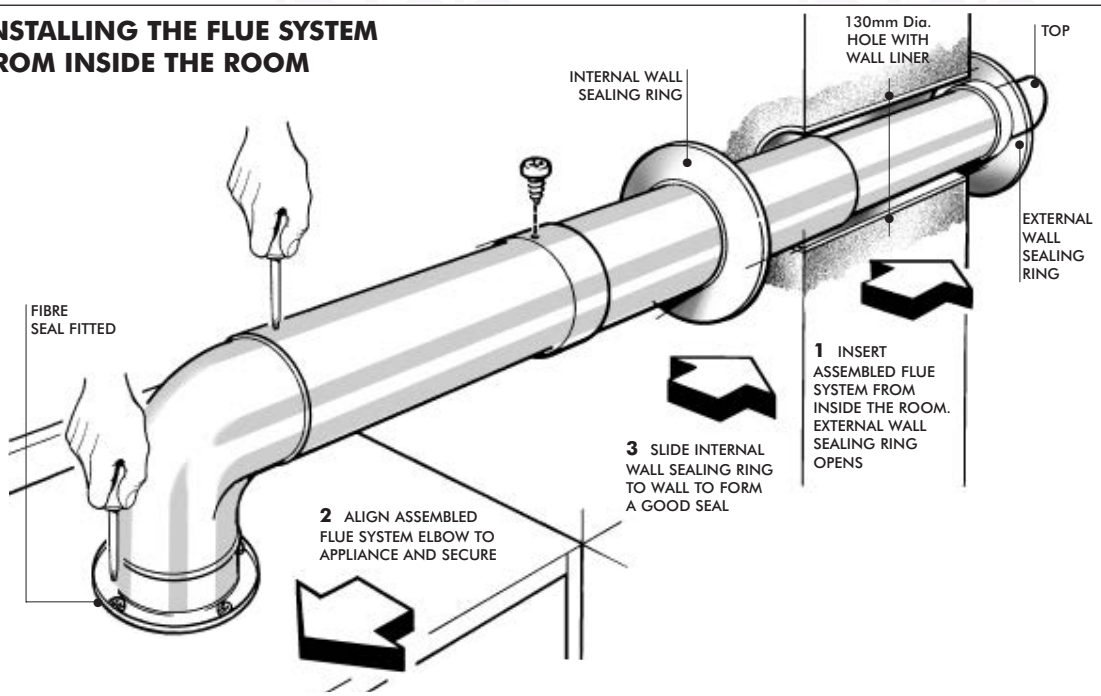


**21** **INSTALLING THE FLUE SYSTEM FROM OUTSIDE THE BUILDING**

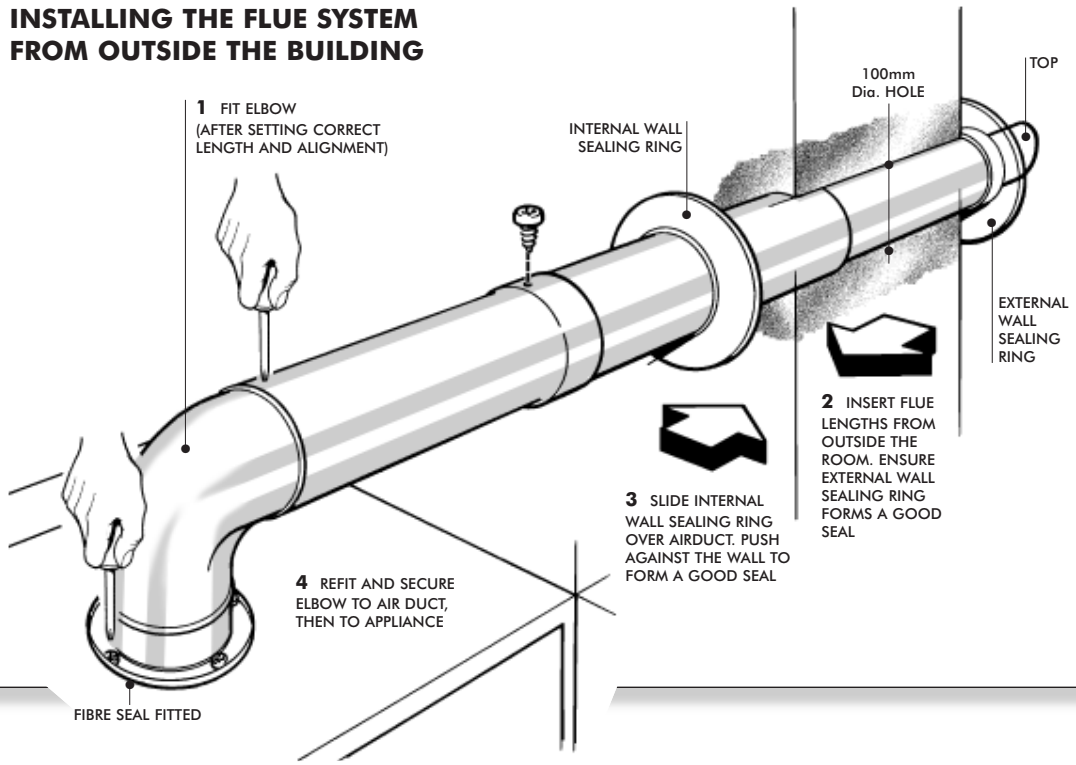

## 22 PIPEWORK INSTALLATION

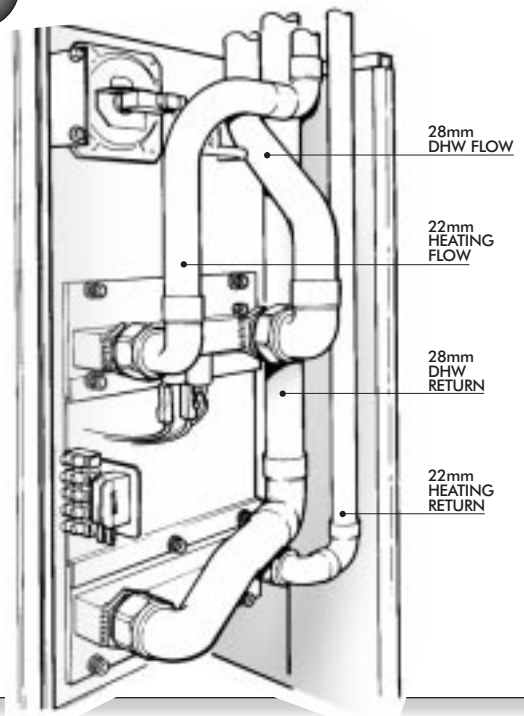


## 23 MAINS WIRING TO BOILER

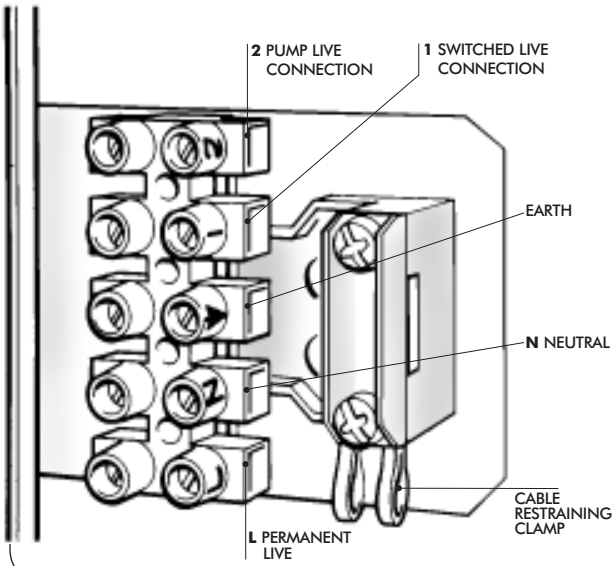


## 24

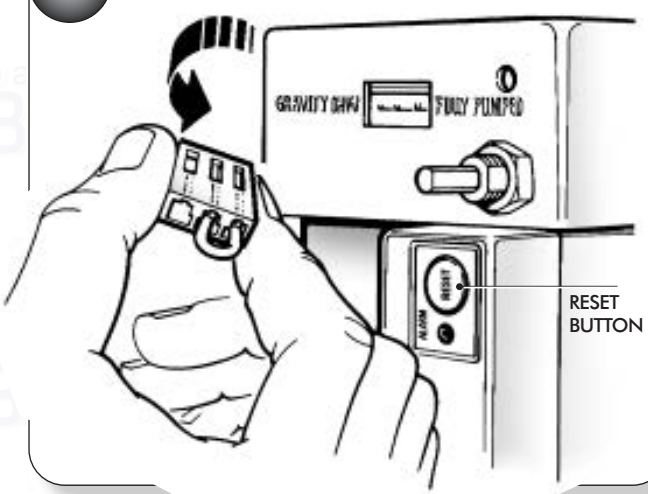


## 4.6 GAS CONNECTION

Connect the gas supply to the gas service cock using a suitable jointing compound.This is located at the lower right hand corner of the appliance. See fig 29.

## 4.7 WATER CONNECTIONS

See Section 3.7 for detailed information.

The appliance has two 22mm and two 28mm compression connections.

The upper two are flow connections and the lower two are return connections.

**FULLY PUMPED CH & DHW SYSTEMS**

The flow must be connected to the upper 22mm connection.
The return must be connected to the lower 22mm connection.

**PUMPED CH & GRAVITY DHW SYSTEMS**

The CH flow must be connected to the upper 22mm connection.

The CH return must be connected to the lower 22mm connection.

The GRAVITY flow must be connected to the upper 28mm connection and must continue upwards to the cylinder.

The GRAVITY return must be connected to the lower 28mm connection.

## 4.8 WIRING INSTRUCTIONS

### 4.8.1 FULLY PUMPED OR COMBINED PUMPED & GRAVITY OPERATION

The appliance comes from the manufacturer with the Aquastat set for a FULLY PUMPED system since these are the most popular and give the householder the most economical heating system. However, should the boiler be installed for use with a combined PUMPED CH & GRAVITY DHW system, the small 'jumper' plug in the front of the control box must be repositioned in the gravity position. (fig 24)

Wiring diagrams fo fully pumped and gravity circuits are shown in Figs 25,26 & 27.

### 4.8.2 BOILER CONNECTIONS

This boiler must have a permanent mains supply and be earthed.

Connect the mains supply cable, the pump live and the switched live to the terminal block situated at the front right hand side of the boiler. It is essential to clamp all these wires using the cable clamp adjacent to the terminal block. Standard colours for the supply are :- brown - live (L), blue neutral (N) and green/yellow - earth (E).

The outer insulation on the cable should not be cut back beyond the cable clamp.

Ensure the earth wire is longer than remaining wires to ensure it will be the last to become disconnected should excessive strain be put on the cable.

## 25 COMBINED PUMPED CH & GRAVITY DHW

The wiring plan shown is based on the use of 10-way junction box (Honeywell Part No. 42002116-001).

Junction Box terminal 10 is switched live and terminal 9 is pump live.

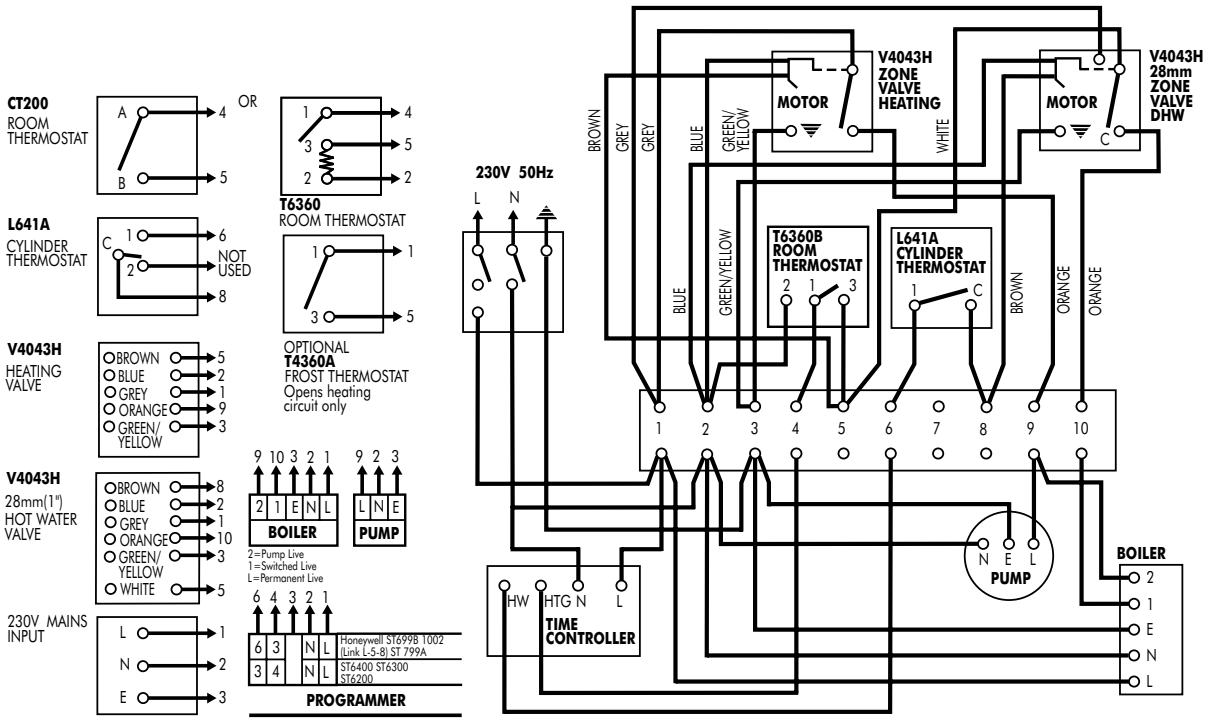


## 26 FULLY PUMPED 'S' PLAN

If using 6-wire28mm or 1" BSPV4043H on any circuit, white wire is not needed and must be made electrically safe. The wiring plan shown is based on the use of 10-way junction box (Honeywell Part No. 42002116-001).

Junction Box terminal 10 is switched live and terminal 9 is pump live.

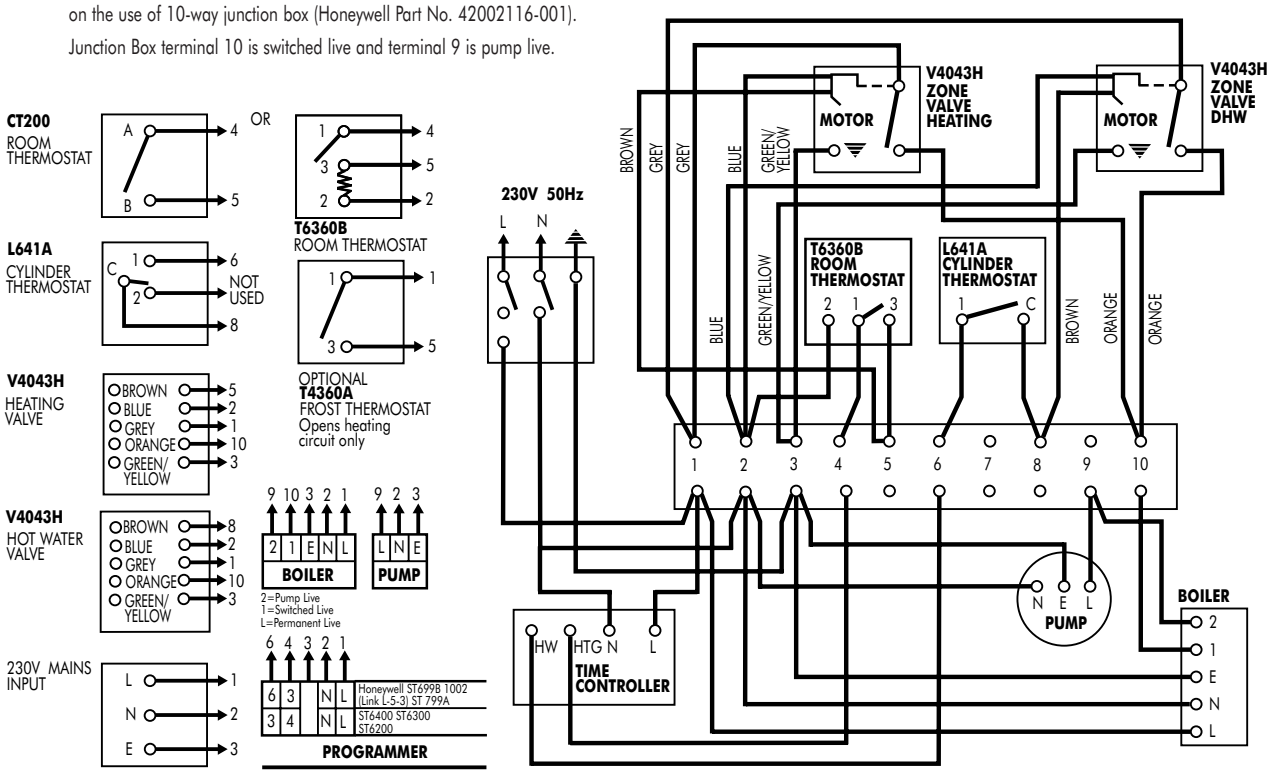

## 27 FULLY PUMPED 'Y' PLAN

The wiring plan shown is based on the use of 10-way junction box (Honeywell Part No. 42002116-001).

Junction Box terminal 8 is switched live and terminal 9 is pump live.

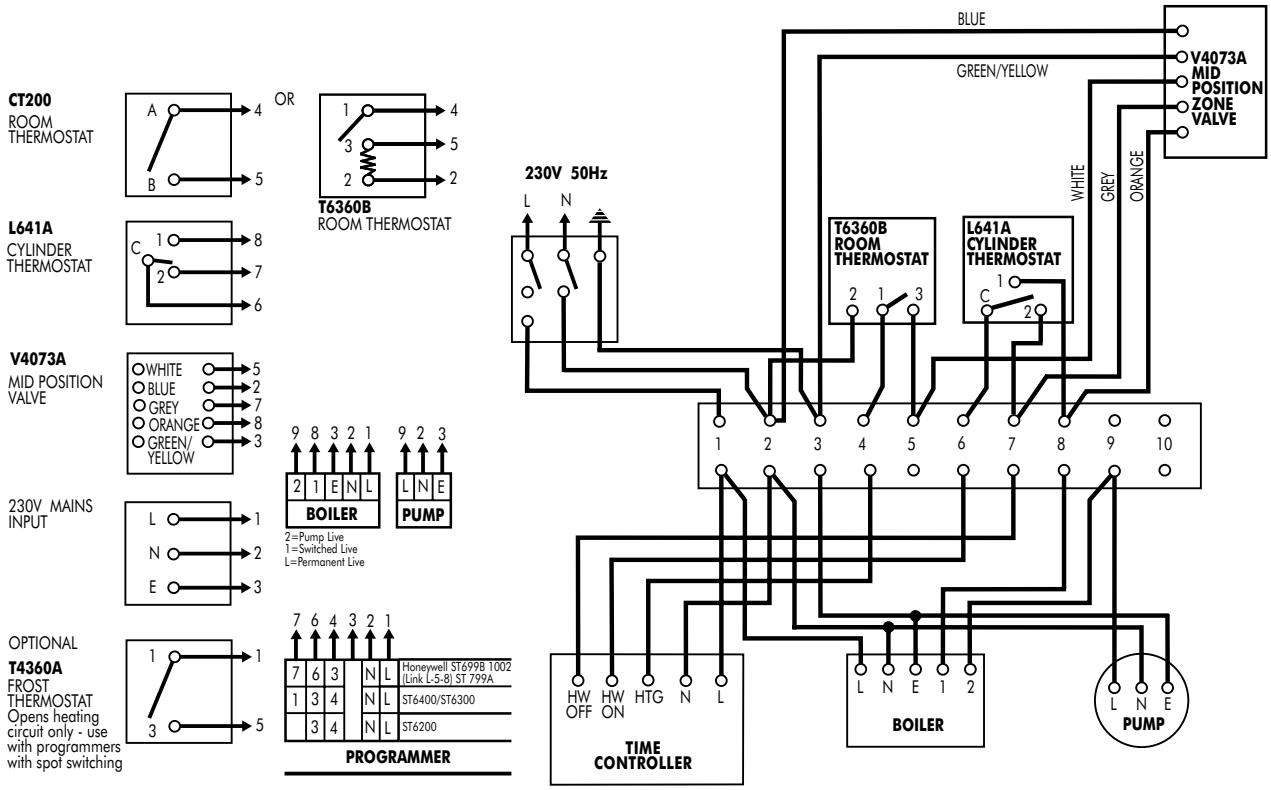


## 28 TYPICAL PROGRAMMER

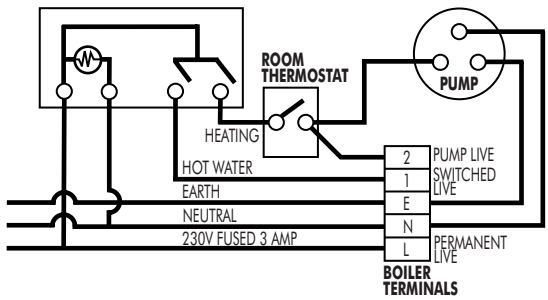


In the event of the Best being installed on an existing gravity DHW and pumped heating system with no additional controls being fitted then the wiring diagram adjacent (Fig. 28) **must** be adhered to.

However it should be noted that this is not recommended because of the overall lack of control and that the radiators may get hot when the pump overun is in operation.

spares & parts online IBASIS.CO.UK

# 5 COMMISSIONING & TESTING

**CHECKS TO ENSURE ELECTRICAL SAFETY SHOULD BE CARRIED OUT BY A COMPETENT PERSON. DO NOT USE THE BOILER WITHOUT THE SEALED INNER CASING BEING FITTED CORRECTLY.**

## 5.1 OPEN VENTED WATER SYSTEMS

**a)** Fill and flush the system with all valves open. Refill the system and check for water leakage. Vent the system including radiators and make sure the pump isolating valves, the bypass and motorised valves (if fitted) are fully open.

**b)** Turn on gas and check for gas soundness around boiler components using leak detection fluid. DO NOT USE A NAKED FLAME.

**c)** Remove the outlet pressure test screw and fit pressure test gauge (see Figure 29).

**d)** Ensure that all secondary controls (timer, room thermostat and cylinder thermostat where fitted) are turned to maximum.

**29 MULTI FUNCTIONAL GAS CONTROL VALVE**

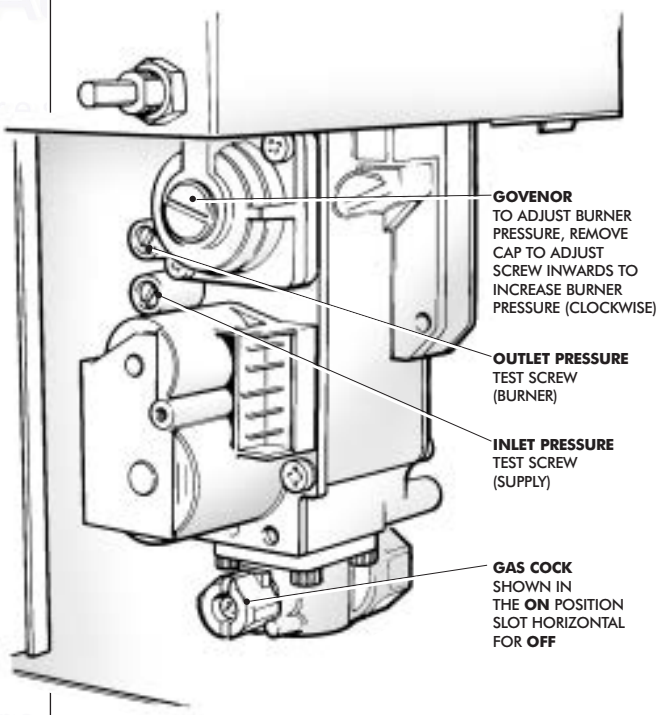


**e)** Turn on the electrical supply and check the pump is working and is circulating water through the system.

**f)** Turn the boiler thermostat fully clockwise to its maximum setting. After a few seconds the boiler will light. The burner flame can be viewed through the viewing glass in the front of the sealed case.

**g)** If the boiler fails to light, and the ignition reset neon illuminates, wait 15 seconds and reset the ignition by depressing the reset button once. (Fig 24)

**h)** Allow the boiler to operate for 10 minutes

**i)** Check the burner pressure is in accordance with the data in section 2.1. If this does not comply, check that the dynamic inlet pressure is 37mb. Adjust the inlet govenor on the gas supply if necessary.

**j)** Turn off the boiler and remove the pressure test gauge and refit the pressure test screw. Check for gas soundness with leak detection fluid.

**k)** Refit the painted right hand inner case using the two screws, then fit the control knob.

**l)** Make sure all secondary controls (e.g. timer, thermostat, etc.) do control the boiler correctly.

**m)** Balance the system and adjust the pump to give the required flow rate. Refer to section 2.3.

**n)** The boiler and system should now be allowed to reach its maximum working temperature and examined for water leaks.

**o)** Turn off the heating system and drain whilst still hot.

**p)** Refill, and vent ensuring all air is cleared from the system.

**q)** Turn the boiler thermostat and all external controls to the required setting and refit the front case.

**NOTE: The Control System incorporates an Anti-cycle device of 3 minutes.**

## 5.2 SEALED WATER SYSTEMS

**a)** Perform the operations as in Section 5.1.(a) to 5.1.(n), then proceed as following.

**b)** Turn OFF the heating system.

**c)** Remove the pump and flush the system. Replace the pump and fill the system until the pressure gauge reads 1.5bar.

**d)** Check the operation of the safety valve which should be set within 0.3 bar of the maximum preset system pressure.

**e)** Charge the water system to the initial design pressure, light the boiler and allow to run to maximum working temperature. Turn off boiler. Check for leaks and drain system whilst still hot.

**f)** Refill and vent system. Adjust to initial design pressure and set any pointer on the pressure gauge to coincide with design pressure. Check for leaks.

## 5.3 USER INSTRUCTIONS

Hand the users instructions to the user for retention and instruct in the efficient and safe operation of the boiler and heating/hot water system. Advise the user of the precautions necessary to prevent damage to the heating/hot water system and the building in the event of the system remaining inoperative during frost conditions.

Finally advise the user that for continued efficient and safe operation of the boiler it is important that adequate servicing is carried out at intervals recommended.

# 6 ROUTINE SERVICING

To ensure continued efficient operation of the appliance, it is recommended that it is checked and serviced as necessary at regular intervals. The frequency of servicing will depend upon the particular installation conditions and usage but in general once a year should be adequate. It is the law that any service work must be carried out by a competent person such as British Gas or other CORGI registered personnel.

The boiler incorporates a flue sampling point on the fan pressure sensing tube, located at the top right hand side of the boiler. If the service engineer has suitable equipment to analyse the flue gas, the plastic cap may be removed and a 6mm inside diameter sample tube fitted. The front painted case and the right hand portion of the case must be removed to gain access. Do not forget to replace the plastic cap after use.

Before commencing any service operation, ISOLATE the mains electrical supply, remove the front painted door by sliding up and then away from the boiler, remove the right hand portion of the case by unscrewing the upper and lower right hand screws (Fig. 15) and sliding the case away from the appliance. TURN OFF the gas supply at the main service cock. Remove the four screws securing the left hand case. Remove the case by sliding it forwards and off the appliance. Service the appliance by following the full procedure detailed below:

## 6.1 MAIN BURNER ASSEMBLY

**a)** Slide forward the front air guide and burner assembly.

**b)** Disconnect the two electrode wires from the gas valve assembly and feed them through the sealed chamber grommet to the burner.

**c)** Remove the combustion chamber/collector hood front by easing it forwards out of the boiler.

**d)** The burner will now slide forwards out of the boiler complete with its electrodes.

**e)** Inspect and, if necessary, clean the burner assembly. If either electrode shows signs of damage or wear replace it.

**f)** Inspect and, if necessary, clean the main injector which remains fitted inside the boiler.

## 6.2 FAN ASSEMBLY

**g)** Disconnect the electrical connections to the fan.

**h)** Remove the two screws securing the fan assembly and remove by sliding it down a few mm, rotate the top forwards and slide the assembly up and out of the boiler.

**i)** Inspect the fan assembly (especially the impellor) for dirt, deposits, or debris by looking through the air intake. Clean with a soft brush if necessary.

## 6.3 HEAT EXCHANGER

**j)** Remove the flue baffles.

**k)** Inspect the heat exchanger from both above and below the fins. If necessary clean the fins with a suitable brush.

## 6.4 RE-ASSEMBLE & RE-COMMISSION

**l)** Reassemble all components in reverse order except the right hand case and front door which should not be refitted until the burner pressure has been checked. Ensure that all joints and seals are correctly fitted. (Polarity is immaterial on the fan L and N connections). When refitting the burner assembly, push the burner assembly backwards until the burner brackets stop against the rear of the boiler. The ignition electrode should be at the front LHS of the burner.

**m)** Unscrew and connect a pressure gauge to the burner pressure test point on the multifunctional control. (Fig. 29)Turn on the gas and electricity supply and light the appliance as described in section 5.

**n)** Check the operation of the appliance and ensure that the burner pressure after at least 10 minutes running is as stated on the data plate or in section 2.I. Adjust if necessary as described in section 5.

**o)** Turn off the boiler and remove the pressure gauge and tighten the sealing screw. Relight the appliance and test for gas soundness.

**p)** Refit the right hand inner case and front panel.

**q)** Return all appliance controls to their original settings.

spares & parts online IBASIS.CO.UK

# 7 PARTS REPLACEMENT

Before commencing any replacement operation, ISOLATE the mains electrical supply, remove the front painted panel by sliding up and then away from the boiler, remove the right hand portion of the inner case by first pulling off the control knob, then unscrewing the upper and lower right hand screws (Fig. 15) and sliding the case away from the appliance. TURN OFF the gas supply at the main service cock.

After any replacement operation, commission the boiler as follows:

**a)** Turn on gas and check for gas soundness around boiler components using leak detection fluid. DO NOT USE A NAKED FLAME.

**b)** Remove the outlet pressure test screw and fit pressure test gauge (see Fig. 29).

**c)** Ensure that all secondary controls (timer, room thermostat and cylinder thermostat where fitted) are turned to maximum.

**d)** Turn on the electrical supply and check the pump is working and is circulating water through the system.

**e)** Turn the boiler thermostat fully clockwise to its maximum setting. After a few seconds the boiler will light. The burner flame can be viewed through the viewing glass in the front of the sealed door.

**f)** If the boiler fails to light, and the ignition reset neon illuminates, wait 15 seconds and reset the ignition by depressing the reset button once.

**g)** Allow the boiler to operate for 10 minutes

**h)** The gas rate can now be set as required by adjusting the governor on the gas valve. See Figure 29. Turn clockwise to increase the flow. For heat output/pressure setting refer to table 2.1.

**i)** Turn off the boiler and remove the pressure test gauge and refit the pressure test screw. Check for gas soundness with leak detection fluid.

**j)** Refit the painted right hand inner case with the two screws, then refit the control knob.

**k)** Make sure all secondary controls (e.g. timer, thermostat, etc.) do control the boiler correctly.

**l)** Turn the boiler thermostat and all external controls to the required setting and refit the front panel.

## 7.1 OVERHEAT CUT OFF DEVICE

**a)** Pull off the two electrical connections.

**b)** Unscrew the overheat cut off device from the flow (upper) manifold.

**c)** Fit the replacement overheat cut off device, do not overtighten connect the electrical wires (polarity is not important), and re-assemble the appliance in reverse order.

## 7.2 FLOW TEMPERATURE THERMISTOR

**a)** Pull off the two electrical connections.

**b)** Unscrew the thermistor from the flow (upper) manifold.

**c)** Fit the replacement overheat cut off device ensuring a small amount of thermal paste is applied to the end of the thermistor, do not overtighten connect the electrical wires (polarity is not important), and re-assemble the appliance in reverse order.

**30 LOCATION OF SERVICEABLE COMPONENTS**

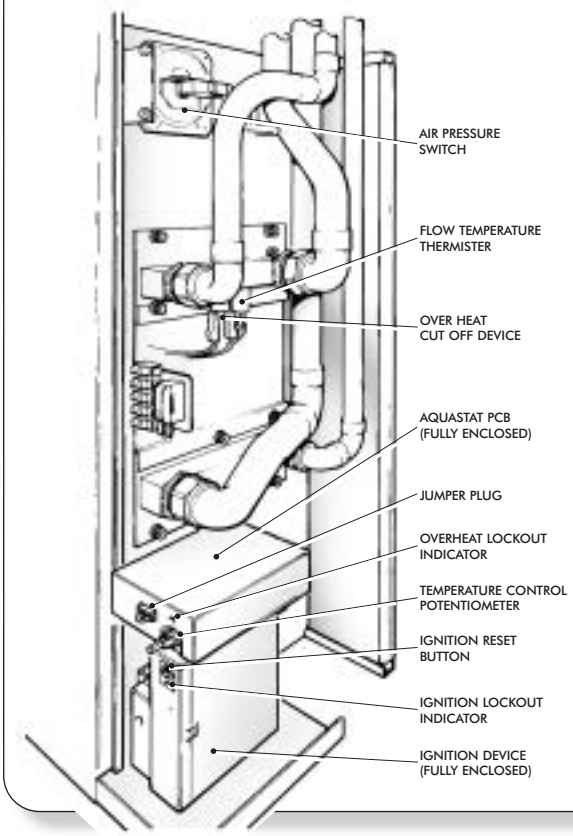


## 7.3 AIR PRESSURE SWITCH

**a)** Pull off the three electrical connections, noting their positions on the switch.

**b)** Unscrew the two screws retaining the switch.

**c)** Remove the switch, carefully pulling off the silicon tubes.

**d)** Fit the replacement switch, connect the silicon tubes and connect the electrical wires, ensuring they are in the correct position. Re-assemble the appliance in reverse order.

## 7.4 IGNITION PCB (FULLY ENCLOSED)

**a)** Pull off the 12 way plug on the front of the ignition device.

**b)** Unscrew the single screw which retains the ignition box.

**c)** Remove the box by pulling it forwards, the ignition and detection leads should be pulled off the box at this stage.

**d)** Fit a new ignition device. Re-assemble the appliance in reverse order.

## 7.5 AQUASTAT PCB & HOUSING

**a)** Unclip the aquastat housing from its mounting plate on the top of the gas valve by slightly pressing the two sides of the housing inwards and lifting the housing upwards and forwards.

**b)** Carefully turn this housing over, pull off the electrical connections.

**c)** Remove the potentiometer from the housing by undoing the hexagonal nut.

**d)** Fit a new Aquastat & housing. Re-assemble in reverse order.

## 7.6 POTENTIOMETER

**a)** Unclip the aquastat housing from its mounting plate on the top of the gas valve by slightly pressing the two sides of the housing inwards and lifting the housing upwards and forwards.

**b)** Carefully turn the housing over. Note the position of blue insulation paper.

**c)** Remove the potentiometer from the housing by undoing the hexagonal nut and removing the two electrical connections from the Aquastat.

**d)** Fit a new potentiometer. Re-assemble in reverse order. Ensuring that the blue insulation paper is correctly located.

## 7.7 BURNER INJECTOR

### METHOD 1

**a)** Unscrew the two upper screws which retain the manifold to the boiler side.

**b)** Unscrew the two lower screws which retain the manifold to the boiler side.

**c)** Remove the whole assembly just enough to gain access to the injector and unscrew the injector.

**d)** Fit a new injector using a new sealing washer. Re-assemble the appliance in reverse order.

### METHOD 2

**a)** Remove the four screws securing the left hand inner case. Remove the case by sliding it forwards and off the appliance.

**b)** Remove the combustion chamber front panel by pulling it forwards out of the appliance.

**c)** Dislocate the grommet from the boiler case.

**d)** Slide the burner forwards out of the appliance taking care not to strain the ignition and sensing electrode leads.

**e)** Remove the ignition and sensing electrodes from the end of the burner and set the burner aside.

**f)** Unscrew and remove the injector and its sealing washer.

**g)** Fit a new injector using a new sealing washer. Re-assemble the appliance in reverse order.

## 7.8 GAS VALVE

**a)** Unscrew the 4 screws which retain the gas service cock to the gas valve.

**b)** Unscrew the single screw which retains the ignition box to the gas valve.

**c)** Remove the box by pulling it forwards,the wires may remain connected to the ignition device.

**d)** Unclip the aquastat housing from its mounting plate on the top of the gas valve by slightly pressing the two sides of the housing inwards and lifting the housing upwards and forwards.

**e)** Unscrew and remove the aquastat housing bracket from the top of the gas valve (4 screws). This may not be necessary if the bracket is pre-fitted to the new gas valve.

**f)** Unscrew the 4 screws which retain the manifold to the boiler side.

**g)** Remove the valve/manifold assembly from the boiler.

**h)** Separate the valve and manifold by unscrewing the 3 extended screws.

**i)** Re-assemble in reverse order, ensuring all seals are in good condition (replace where necessary).

## 7.9 MAIN BURNER

**a)** Remove the four screws securing the left hand inner case. Remove the case by sliding it forwards and off the appliance.

**b)** Remove the combustion chamber front panel by pulling it forwards out of the appliance.

**c)** Dislocate the grommet from the boiler case.

**d)** Slide the burner and air guide forwards out of the appliance taking care not to strain the ignition and sensing electrode leads.

**e)** Remove the ignition and sensing electrodes from the end of the burner and remove the burner.

**f)** Fit the ignition and sensing electrodes to the new burner and slide the new burner into position.

**g)** Reassemble the appliance in reverse order.

**31 ELECTRODE ALIGNMENT**

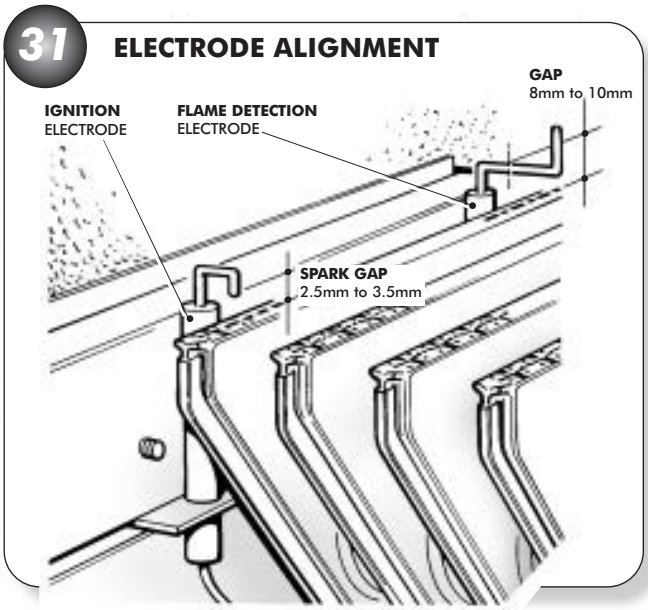


## 7.10 IGNITION ELECTRODE

### Front L/H of Burner

**a)** Remove the ignition electrode from the burner as described in Section 7.9.

**b)** Remove the aquastat housing as described in Section 7.5a.

**c)** Pull the ignition lead off the ignition device on the gas valve and completely remove the ignition electrode assembly.

**d)** Fit a new ignition electrode and reassemble the appliance in reverse order.

## 7.11 FLAME SENSING ELECTRODE

### Rear L/H of Burner

**a)** Remove the flame sensing electrode from the burner as described in Section 7.9.

**b)** Remove the aquastat housing as described in Section 7.5a.

**c)** Pull the flame sensing lead off the ignition device on the gas valve and completely remove the flame sensing electrode assembly.

**d)** Fit a new flame sensing electrode and reassemble the appliance in reverse order.

## 7.12 FAN ASSEMBLY

**a)** Remove the combustion chamber front panel as described in section 7.9a & b.
**b)** Pull off the live, neutral and earth leads from the fan.
**c)** Unscrew and remove the two screws securing the fan assembly to the interpanel.
**d)** Slide the fan assembly downwards, rotate the top forwards, and slide the assembly up and out of the appliance.
**e)** Fit a new fan assembly and reassemble the appliance in reverse order.

## 7.13 COMBUSTION CHAMBER INSULATION

The design of the appliance is such that the combustion chamber insulation should not require replacement unless mechanically damaged. To replace the front and/or side panel insulation proceed as follows:

**a)** Remove the combustion chamber front panel as described in section 7.9a & b.
**b)** Replace the front insulation, sliding the new piece in from either side.
**c)** Replace the side insulation, sliding the new pieces in from the front.
**d)** Re-assemble the appliance in reverse order.

**Should the rear insulation need replacing, proceed as follows:**

**a)** Remove the fan assembly as described in section 7.12.
**b)** Remove the front and rear flue baffle.
**c)** Remove the three rear insulation panels and discard.
**d)** Before refitting the side insulation panels, fit the rear lower panel from the front.
**e)** Insert the two upper new rear insulation panels downwards from the top of the heat exchanger.
**f)** Replace the side insulation, sliding the new pieces in from the front.
**g)** Reassemble the appliance in reverse order.

**It is recommended that a protective mask is worn when changing or handling the insulation material.**

# 8 INTERNAL WIRING DIAGRAMS

## 8.1 FUNCTIONAL FLOW WIRING DIAGRAM

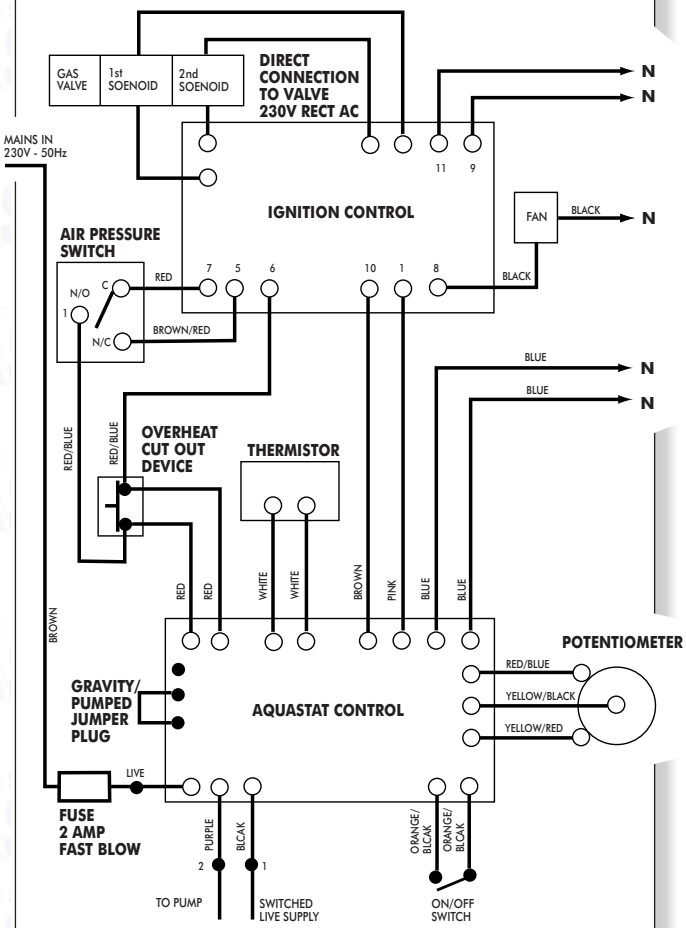


## 8.2 ILLUSTRATED WIRING DIAGRAM

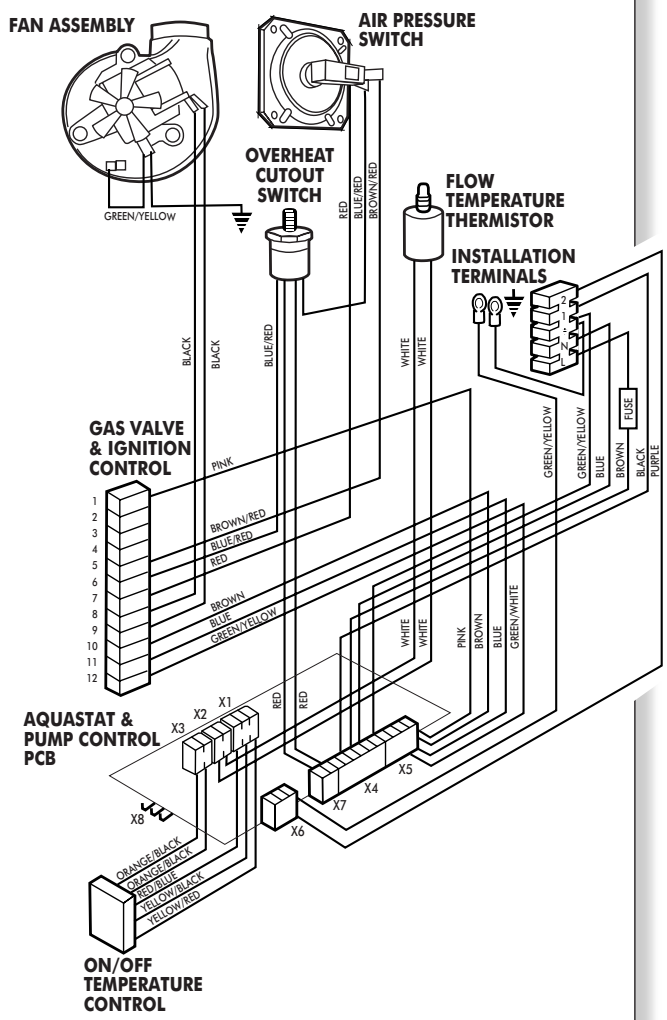

# 9 FAULT FINDING

Before proceeding through this fault finding guide, ensure all connections to the electronic circuit board and the 12 way connector to the ignition device are correctly fitted.
Carry out preliminary electrical safety checks in accordance with 'Regulations for Electrical Installations'.

**a)** Position the temperature control to 0.
**b)** Turn ON external gas and electricity supplies.
**c)** Ensure there is 230V at the permanent live 'L' on the installation terminal block.
**d)** Ensure there is 230V at the switched live '1' on the installation terminal block. This is the feed from the external controls, they should be set to ON or MAXIMUM. A link between terminals 'L' and '1' will simulate the external controls being ON.

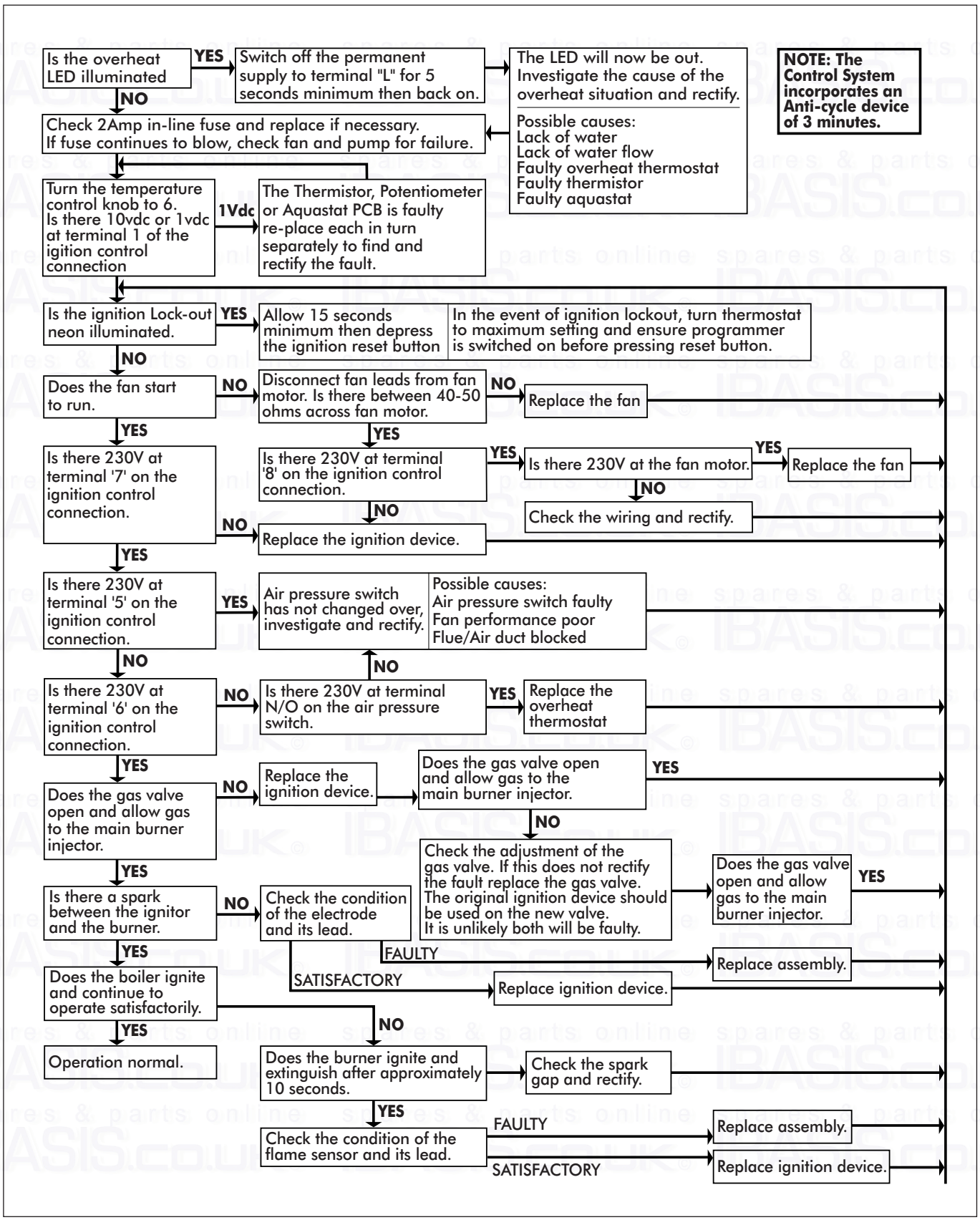

32

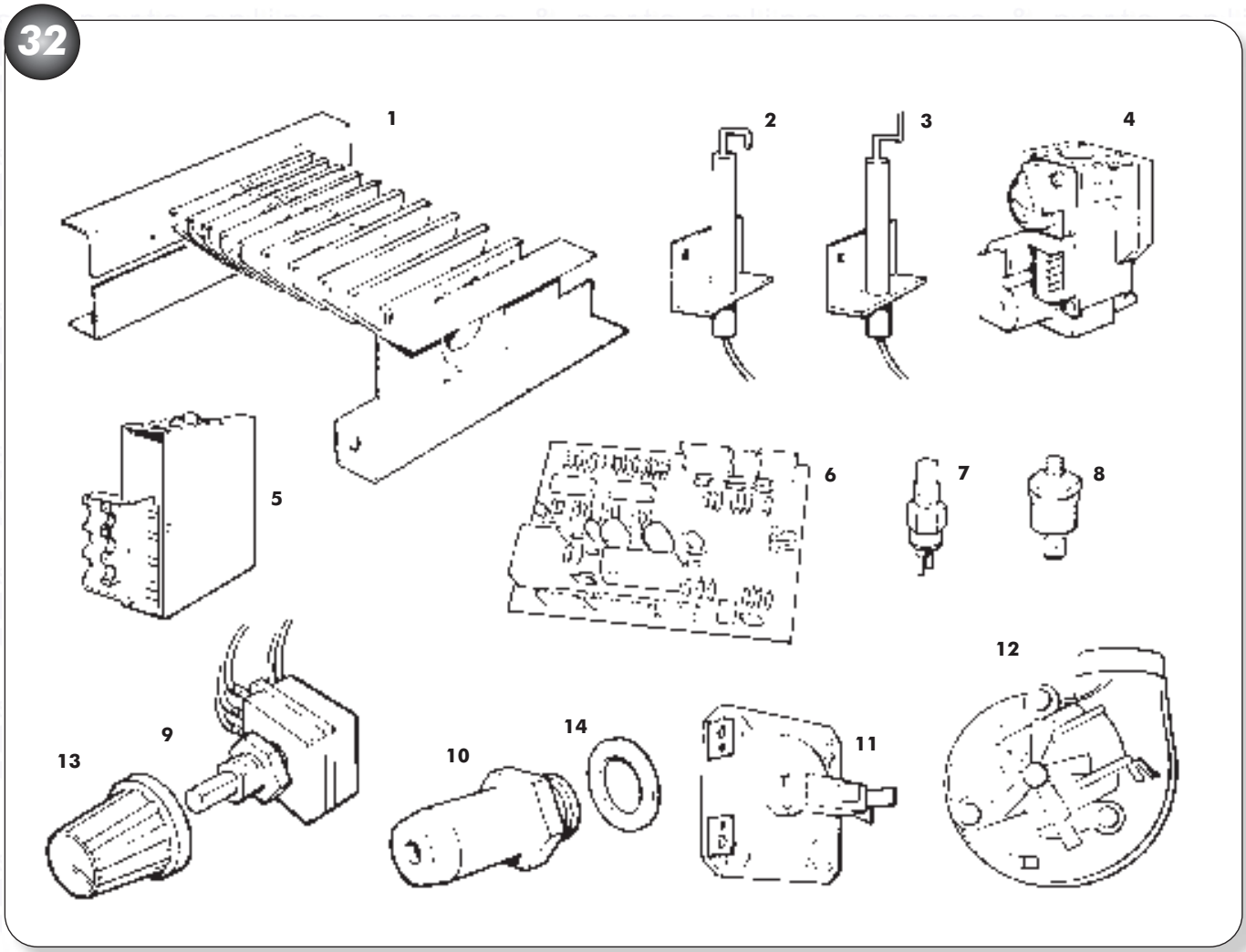


| Key | G.C. Part No. | Description | No. off | Maker's Part No. |
|---|---|---|---|---|
| 1 | | Main Burner (Aeromatic) | 1 | 700539 |
| 2 | | Ignition Electrode | 1 | 500573 |
| 3 | | Flame Detection Electrode | 1 | 500574 |
| 4 | | Gas Valve (Without Ignition Device) | 1 | 500569 |
| 5 | | Ignition Device (For Gas Valve) | 1 | 500570 |
| 6 | | Aquastat PCB | 1 | 600513 |
| 7 | | Thermistor | 1 | 500572 |
| 8 | | Overheat Cut Off Device | 1 | 500578 |
| 9 | | Potentiometer / On-Off Switch | 1 | 550520 |
| 10 | | Main Burner Injector | 1 | 700532 |
| 11 | | Air Pressure Switch | 1 | 500609 |
| 12 | | Fan | 1 | 601007 |
| 13 | | Knob | 1 | 300525 |
| 14 | | Copper Washer | 1 | 204005 |

# 11 SUPPLEMENT 1

**Supplementary instructions for flue systems with a vertical outlet.**

**a)** Read the installation requirements and flue specifications described in section 3.

**b)** Follow the installation procedure described in section 4 up to section 4.7 (but making the necessary hole(s) in section 4.2 in the ceiling/roof instead of the wall). Use the following instructions in place of section 4.7.

**c)** Measure the vertical distance from the top of the boiler case to the roof line (Fig. 33). Use this length to calculate the number of extension ducts required.

**d)** Starting at the boiler, fit the vertical socket, standard duct and extensions required. Then fit the adaptor.

**e)** Now working from outside fit the Balanced flue roof terminal, ensuring the roof flashing and sealing components are secured to the roof.

**f)** Ensure the inner and outer ducts are correctly fitted to the adaptor.

**Note: All the joints should be secured using the self-tapping screws supplied.**

**33 FLUE SYSTEM ASSEMBLY AND DIMENSIONS**

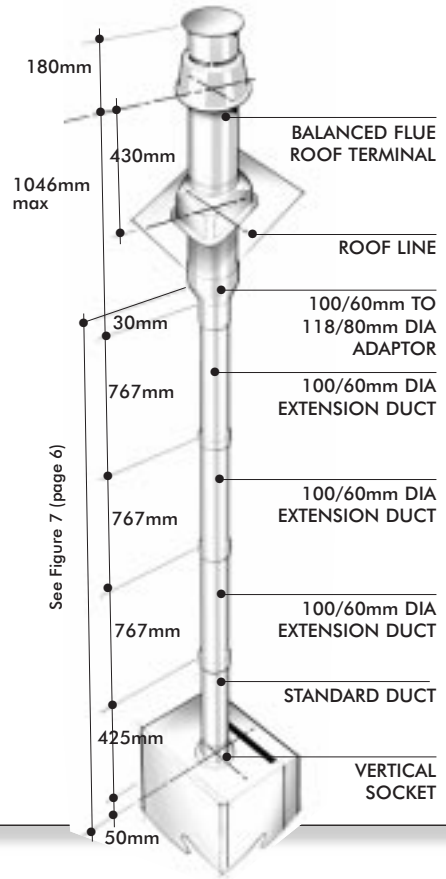


# 12 SUPPLEMENT 2

**Supplementary instructions for flue systems incorporating an additional 90° elbow.**

**a)** Read and follow the installation procedure described in the main section of the installation instructions up to section 4.2.

**b)** Using information given earlier in this booklet determine where the boiler and flue are to be positioned and make the necessary hole in the wall(s) for the air/flue duct as defined in section 4.2.

**c)** Install the boiler as described in section 4 with the exception of the flue system (4.5)

**d)** Using the information and dimensions in Figures 3 to 7 shown earlier in this booklet calculate the lengths required for each duct.

**e)** Cut each duct to length, ensuring that each cut is square and free from burrs.

**f)** Starting at the terminal end assemble the ducts and elbows, and work back towards the boiler.

**IMPORTANT NOTE:** *All flue joints must be secured by two self-tapping screws through the air duct as illustrated.*

For installations that require longer vertical or horizontal flue lengths a twin pipe system is available. Refer to separate flue booklet for further information.

## SE-DUCT APPLICATIONS

These supplementary instructions must be read in conjunction with the Installation and Servicing Instructions supplied with the appliance.

The entry of the concentric air/flue duct should be as close to the centre of the entry face of the SE-DUCT as possible. It is very important that the concentric air/flue duct is not positioned in the corner of the SE-DUCT.

The standard flue kit supplied with the appliance is suitable for installation in a SE-DUCT application. The appliance Installation and Servicing Instructions should be used for the complete installation with the exception of the following.

1 The external wall sealing ring should not be fitted.

2 The end of the air duct should be fitted flush with the inside of the SE-DUCT as shown in the diagram below.

3 Horizontal flue installations only are suitable for SE-DUCT applications.

**34 CONCENTRIC AIR/FLUE DUCT POSITION FOR SE-DUCT APPLICATION**

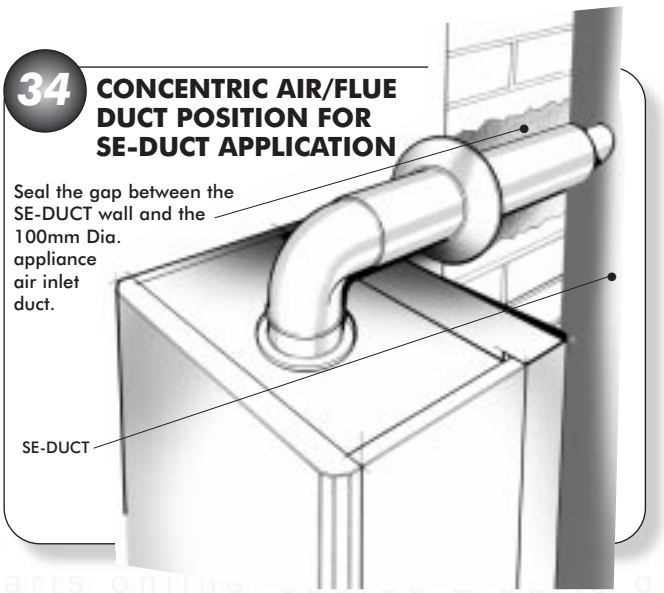

HALSTEAD

*British Made Boilers*

20/22 First Avenue, Bluebridge Industrial Estate, Halstead, Essex C09 2EX
Tel: (01787) 475557 Fax: (01787) 474588

**SERVICE HOTLINE (01203) 351424**

Halstead Boilers are continuously improving their products and therefore reserve the right to change specifications without prior notice and accept no liability for any error or omission in the information contained in this document.

**HB-01-99-750809**

© HALSTEAD BOILERS LTD. 1998