HALSTEAD

British Made Boilers

2000225066C.03.03

Instructions for Use
Installation and Servicing

To be left with the user

Eden Cb

G.C. No. 47-260-01

High Efficiency
Condensing
Combination Boiler

CE

benchmark™

The code of practice for the installation, commissioning & servicing of gas central heating

This is a Cat I_{2H} Appliance

Reference in these instructions to British Standards and Statutory Regulations/Requirements apply only to the United Kingdom. For Ireland the current edition of I.S.813 "Domestic Gas Installations" must be used.

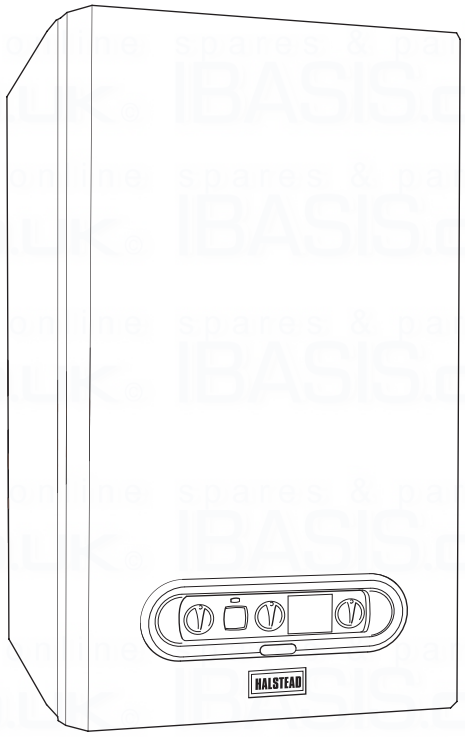

The instructions consist of three parts, User, Installation and Servicing Instructions, which includes the Guarantee Registration Card. The instructions are an integral part of the appliance and must, to comply with the current issue of the Gas Safety (Installation and Use) Regulations, be handed to the user on completion of the installation.

Halstead Boilers Limited, 20/22 First Avenue, Bluebridge Industrial Estate, Halstead, Essex CO9 2EX
Tel: 01787 272800. Sales Direct Line: 01787 475557. Fax: 01787 474588. Service Helpline: 01926 834834.
e-mail: sales@halsteadboilers.co.uk or service@halsteadboilers.co.uk Website: www.halsteadboilers.co.uk

Important Information

General

This condensing combination boiler is able to provide room heating as part of a central heating system, and domestic hot water direct from the cold water supply without the need for secondary storage. The central heating water temperature and domestic hot water temperature can both be adjusted on the boiler.

Once the controls are set the boiler operates automatically.

A frost protection program is also included.

Please read these instructions and follow them carefully for the correct and economical use of your boiler.

Gas Category

This boiler is for use only on Natural gas (G20).

Gas Safety (Installation and Use) Regulations

In your own interests and that of safety, it is the Law that ALL gas appliances are installed by a competent person in accordance with the current issue of the above regulations.

Gas Testing and Certification

The boiler is tested and certificated for safety and performance. It is, therefore, important that no alteration is made to the boiler unless approved, in writing, by Halstead Boilers Ltd.

Any alteration not approved by Halstead Boilers Ltd., could invalidate the certification, boiler warranty and may also infringe the current issue of the statutory requirements.

CE Mark

This boiler meets the requirements of Statutory Instrument, No. 3083 The Boiler (Efficiency) Regulations, and therefore is deemed to meet the requirements of Directive 92/42/EEC on the efficiency requirements for new hot water boilers fired with liquid or gaseous fuels.

Type test for purposes of Regulation 5 certified by: Notified body 0086.

Product/production certified by: Notified body 0086.

The CE mark on this appliance shows compliance with:

1. Directive 90/396/EEC on the approximation of the laws of the Member States relating to appliances burning gaseous fuels.

2. Directive 73/23/EEC on the harmonisation of the Laws of the Member States relating to electrical equipment designed for use within certain voltage limits.

3. Directive 89/336/EEC on the approximation of the Laws of the Member States relating to electromagnetic compatibility.

Control of Substances Hazardous to Health

Under Section 6 of The Health and Safety at Work Act 1974, we are required to provide information on substances hazardous to health.

The adhesives and sealants used in this appliance are cured and give no known hazard in this state.

Insulation Pads

These can cause irritation to skin, eyes and the respiratory tract.

If you have a history of skin complaint you may be susceptible to irritation. High dust levels are usual only if the material is broken.

Normal handling should not cause discomfort, but follow normal good hygiene and wash your hands before eating, drinking or going to the lavatory.

If you do suffer irritation to the eyes or severe irritation to the skin seek medical attention.

Spare Parts

REMEMBER, When replacing a part on this appliance, use only spare parts that you can be assured conform to the safety and performance specification that we require. Do not use reconditioned or copy parts that have not been clearly authorised by Halstead Boilers Ltd.

Manual Handling Guidance

During the appliance installation and the replacement of the heat exchanger it will be necessary to employ caution and assistance whilst lifting as the appliance or component exceeds the recommended weight for a one man lift.

In certain situations it may be required to use a mechanical handling aid.

Take care to avoid trip hazards, slippery or wet surfaces.

CONTENTS	DESCRIPTION	SECTION	PAGE No.
INSTRUCTIONS FOR USE	Important Information		2
	Operating the Boiler		4
INSTALLATION INSTRUCTIONS	General Information	1	5
	Boiler Location and Ventilation	2	8
	Flue Location and Ventilation	3	9
	Heating System	4	11
	Domestic Hot Water System	5	13
	Installation Preparation	6	14
	Flue Preparation	7	16
	Gas/Water Connections and Boiler Fixing	8	18
	Safety Valve Discharge and Condensate Connections	9	19
	Electrical Connections	10	20
	Commissioning	11	22
SERVICING INSTRUCTIONS	Servicing	12	24
	Fault Finding	13	29
	Replacement of Parts	14	31
	Spare Parts	15	42

Important Information

WARNINGS

Gas Leak or Fault

If a gas leak or fault exists or is suspected, turn the boiler mains electrical supply off and turn off the gas supply at the meter. Consult your local gas company or your local installation/servicing company.

Clearances

Minimum clearances must be left around the boiler as shown in diagram 2.1.

Sheet Metal Parts

This boiler contains metal parts (components) and care should be taken when handling and cleaning, with particular regard to edges.

Sealed Components

Under no circumstances must the User interfere with any sealed component as this could result in a potentially dangerous situation arising.

Electrical Supply Failure

The boiler must be earthed.

The boiler will not work without an electrical supply.

Normal operation of the boiler should resume when the electrical supply is restored.

Reset any external controls, to resume normal operation of the central heating.

If the boiler does not resume normal operation turn the mains reset switch off and on. If the boiler does not resume normal operation after this the overheat stat may have operated. The overheat stat would only operate under abnormal conditions and, under these circumstances; it would be advisable to consult your installation / servicing company.

Maintenance and Servicing

For the continued efficient and safe operation of the boiler it is recommended that it is checked and serviced at regular intervals. The frequency of servicing will depend upon the installation conditions and usage, but in general, once a year should be enough.

If this appliance is installed in a rented property in the UK there is a duty of care imposed on the owner of the property by the current issue of the Gas Safety (Installation and Use) Regulations, Section 35.

Servicing/maintenance should be carried out by a competent person in accordance with the rules in force in the countries of destination.

To obtain service, please call your installer or Halstead Boilers using the telephone number on the front cover of this booklet.

Please be advised that the installation engineer on completion of commissioning and servicing should complete the 'Benchmark' logbook.

All CORGI Registered Installers carry a CORGI ID card, and have a registration number. Both should be recorded in your boiler Logbook. You can check your installer is CORGI registered by calling CORGI direct on: - 01256 372300.

Boilers Installed in a Compartment or Cupboard

If the boiler is fitted into a compartment or cupboard, it does not require any ventilation openings. Do not use the compartment or cupboard for storage.

Protection Against Freezing

The boiler has a built in frost protection programme as long as the electricity and gas are left switched on.

This device operates the pump when the temperature inside the boiler falls below 7^{0}C.

The burner will fire if the temperature inside the boiler falls to 3^{0}C.

Any other exposed areas of the system should be protected by a seperate frost thermostat.

If the mains electricity and gas are to be turned off for any long periods during severe weather, it is recommended that the whole system, including the boiler, should be drained to avoid the risk of freezing. Make sure that, if fitted, the immersion heater in the cylinder is switched off.

If you have a sealed water system contact your installation/ servicing company as draining, refilling and pressurising MUST be carried out by a competent person.

As a safety feature the boiler will stop working if the condensate drain becomes blocked. During freezing conditions this may be due to the forming of ice in the condense drain external to the house. Release an ice blockage by the use of warm cloths on the pipe. The boiler should then restart. Contact your installation/ servicing company if the fault persists.

Draining and Filling

This boiler works in a pressurised system, which must only be drained, refilled and pressurised by a competent person.

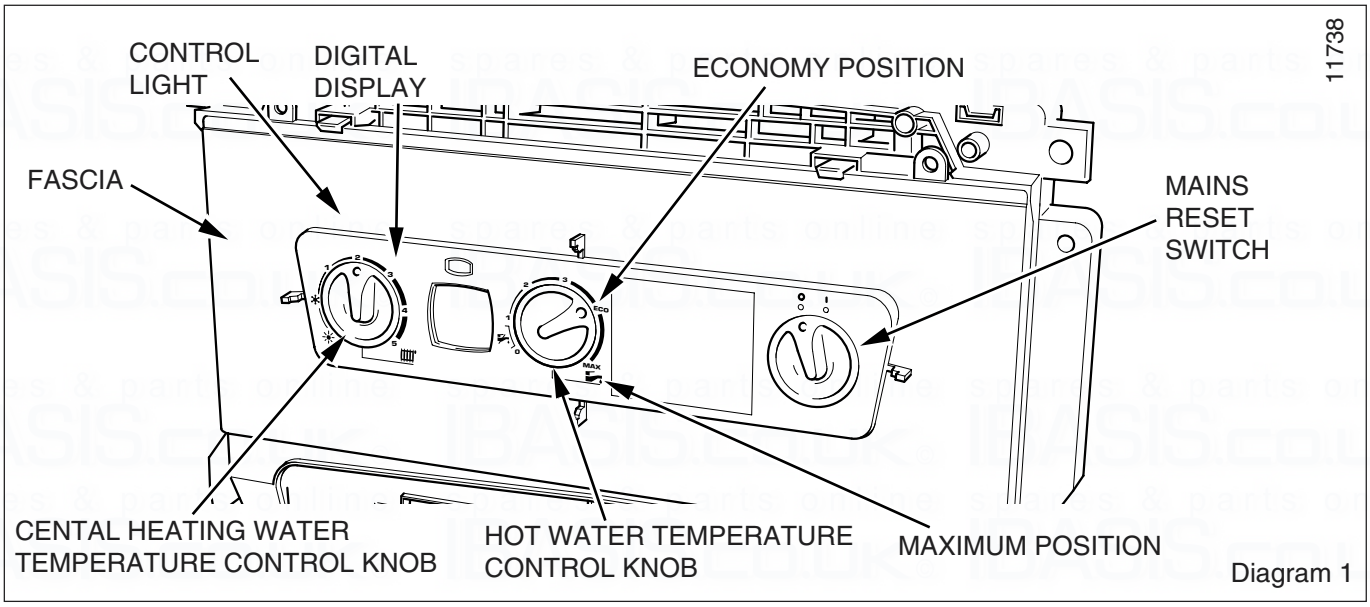

Diagram 1

Operating the Boiler

Pressure Relief Safety Valve

A pressure relief safety valve and discharge pipe is fitted to the boiler. This valve must not be touched. Should there be any discharge from the pipe, isolate the boiler electrical supply and call your installer or Halstead Boilers using the telephone number on the front cover of this booklet.

Condensate Drain

The condensate drain, see section 9.2, must not be modified or blocked.

Cleaning

This appliance contains metal parts and care should be taken when handling and cleaning with particular regard to edges.

The boiler casing can be cleaned using a mild liquid detergent with a damp cloth, then a dry cloth to polish.

Do not use any form of abrasive or solvent cleaner as you may damage the paintwork.

Pluming from flue terminal

Like all condensing boilers this appliance will produce a plume of condensation from the flue terminal in cool weather. This is due to the high efficiency and hence low flue gas temperature of the boiler. It is normal and not a fault indication.

Replacement Parts

If replacement parts are required contact Halstead Boilers using the telephone number on the front cover of this booklet.

Please quote the name of the appliance this infomation will be on the front of the appliance.

To Operate the Boiler

1. Check that all five isolating valves are open, see diagram 8.1.

2. A sealed pressurised system must be filled and pressurised by a competent person.

3. Check that the electrical supply to the boiler is ON at the external isolator.

Only operate the boiler when you are sure that the system has been filled and pressurised. Check this by looking at the pressure reading on the digital display, which should read 1.0bar, see diagram 1. The digital display gives a pressure reading when there is no demand or when the appliance is in the domestic hot water mode.

4. Open a hot water tap, check that water flows, then close it.

5. If you are in any doubt about the boiler being filled with water contact your installer or Halstead Boilers using the telephone number on the front cover of this booklet.

6. Set any remote controls as required.

7. Turn the mains reset on/off switch to the ON position (I), see diagram 1. The control light will illuminate (green) indicating the boiler is lit.

User Controls

The temperature of the domestic hot water and the central heating water can be set on the control knobs on the controls fascia, see diagram 1.

Mains Reset Switch

0: Off.

I: On.

A fault is indicated by a RED flashing light on the control light and flash fault code on digital display.

To reset:

Turn mains reset switch to O anti-clockwise.

Wait five seconds.

Turn mains reset switch to I clockwise.

Central Heating Temperature Control:

0: Temperature control is Off.

I: Temperature control is On. To adjust the temperature turn the control to the desired setting between I 'Min' and 'Max'.

'Max' is approximately 82°C (180°F).

Hot Water Temperature Control:

0: Hot water is Off.

Turn selector between 1 and MAX to adjust water temperature between 40°C and 60°C.

The **ECO** setting, water temperature 55°C, is the recommended optimum position for constant use.

Digital Display

If the digital display shows pressure less than 0.7bar, re-pressurise the system to 1bar. If the system repeatedly looses pressure, YOU MUST CONTACT YOUR INSTALLER OR HALSTEAD BOILERS USING THE TELEPHONE NUMBER ON THE FRONT COVER OF THIS BOOKLET.

Please note: The digital display will only indicate the system pressure when there is no demand for heat.

To Turn the Boiler Off

There is a mains/reset switch on the right hand side of the controls fascia, which will isolate the boiler. However, it is preferable to leave the electrical supply on whenever possible to permit operation of the built-in frost protection (see 'Protection Against Freezing') and daily pump and valve exercise.

To turn off the central heating use the room thermostat or clock/timer.

To turn off the domestic hot water turn the domestic hot water knob to the minimum setting.

For holiday mode turn both of the temperature knobs to the minimum setting.

To turn off the boiler for servicing, isolate it from the electrical supply. To turn it on again follow the instructions given in 'To Operate the Boiler'.

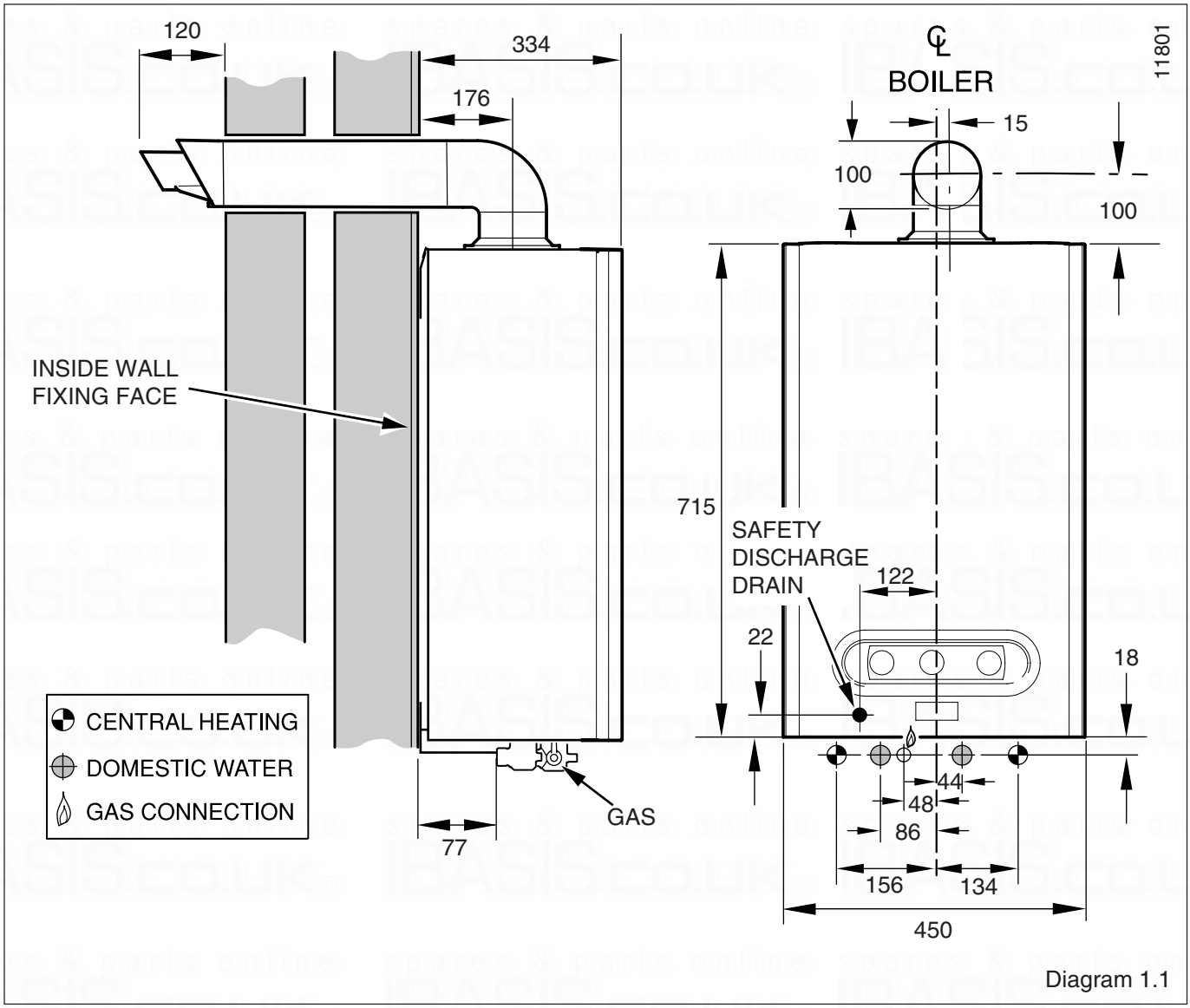

Diagram 1.1

IMPORTANT NOTICE

The boiler is supplied in one pack which also includes the fittings pack, the flue is supplied seperately.

This boiler is for use only on G20 natural gas.

Where no British Standards exists, materials and equipment should be fit for their purpose and of suitable quality and workmanship.

Refer to Manual Handling Operations, 1992 regulations.

The installation of this boiler must be carried out by a competent person in accordance the rules in force in the countries of destination.

Manufacturer's instructions must not be taken as overriding statutory requirements.

1.1 Sheet Metal Parts

WARNING: When installing the appliance, care should be taken to avoid any possibility of personal injury when handling sheet metal parts.

1.2 Statutory Requirements

The appliance is suitable only for installation in GB and IE and should be installed in accordance with the rules in force.

Draw attention, if applicable, to the current issue of the Gas Safety (Installation and Use) Regulations, Section 35, which imposes a duty of care on all persons who let out any property containing a gas appliance in the UK.

In GB the installation of the boiler must be carried out by a competent person as described in the following regulations:

The manufacturer's instructions supplied.

The Gas Safety (Installation and Use) Regulations.

The appropriate Buildings Regulations either The Building Regulations, The Building Regulations (Scotland), The Building Regulations (Northern Ireland).

The Water Fittings Regulations or Water byelaws in Scotland.

The Health and Safety at Work Act, Control of Substances Hazardous to Health (COSHH).

The Current I.E.E. Wiring Regulations.

Where no specific instructions are given, reference should be made to the relevant British Standard Code of Practice.

In IE, the installation must be carried out by a competent person and installed in accordance with the current edition of I.S.813 "Domestic Gas Installations", the current Building Regulations and reference should be made to the current ETCI rules for Electrical Installation.

In GB the following Codes of Practice apply:

BS4814, BS6798, BS5440 Part 1 and 2, BS5546 Part 1, BS5449, BS6891, BS6700, BS7074 Part 1 and 2, BS7593, BS7671.

In IE: I.S.813, BS5546, BS 5449, BS 7074, BS 7593.

Manufacturer's instructions must not be taken as overriding statutory requirements.

BSI Certification

This boiler certificated to the current issue of EN 483 for performance and safety.

It is important that no alteration is made to the boiler, without permission, in writing, from Halstead Boilers Ltd.

Any alteration that is not approved by Halstead Boilers Ltd., could invalidate the warranty and could also infringe the current issue of the Statutory Requirements.

1.3 Gas Supply

The gas installation shall be in accordance with the relevant standards.

In GB this is BS6891.

In IE this is the current edition of I.S.813 "Domestic Gas Installations".

The supply from the governed meter must be of adequate size to provide a steady inlet working pressure of 20mbar (8in wg) at the boiler.

On completion, test the gas installation for soundness using the pressure drop method and suitable leak detection fluid, purge in accordance with the above standard.

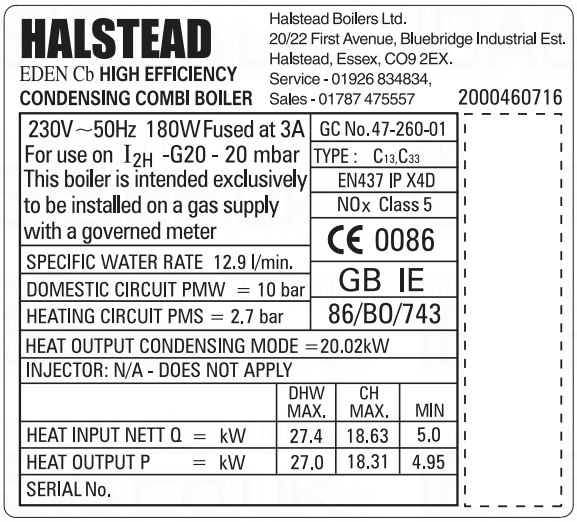

Diagram 1.2

TABLE 1	
Lift Weight Total Weight (installed)	40.7kg (89lb) 43.7kg (96lb)
● Gas connection	Rc½ (½in BSPT)
● Heating and return	22mm copper
● Domestic hot water	15mm copper
Safety valve	Preset 3bar (43.5lbf/in²)
Safety valve discharge	15mm copper
■ Expansion vessel capacity Charge pressure	8 litres (1.76 gallons) 0.5bar (7.3lbf/in²)
Heating system minimum pressure	0.7bar (10.1lbf/in²)
D.H.W Max. working pressure Minimum working pressure	10bar (14.5lbf/in²) 0.7bar (10.1lbf/in²)
Max. Domestic hot water flow rate	10L/min.
Min. Domestic hot water flow rate temp rise Maximum flow temperature	1L/min. 35°C 63°C
■ Maximum heating system water content using fitted expansion vessel, pressurised at 1bar.	130 litres (28.6 gallons) at 75°C average system temperature
Electrical supply Electrical rating IP classification	230V~50Hz 180W fused 3A X4D
Internal Fuse rating On Fan Supply On PCB	 3.15 AT 250mAT

● **Ball valves are fitted in water and gas connections.**

■ **For larger systems use an additional expansion vessel.**

TABLE 2			
RANGE RATING		MIN	MAX
BURNER %CO_2		9.0 ± 0.3	9.0 ± 0.3
APPROXIMATE GAS RATE (after 10 mins. from cold)	m^3/h	0.48	2.7
	ft^3/h	16.8	96

1.4 Technical Data

All dimensions are given in millimetres (except as noted).

See diagram 1.1 and Tables 1 and 2.

The data label is positioned on the inner door, refer to diagram 1.2.

The Seasonal Efficiency Domestic Boilers UK (SEDBUK) is: Eden Cb: Class 'A'.

The value is used in the UK Government's Standard Assessment Procedure (SAP) for energy rating of dwellings. The test data from which it has been calculated has been certified by B.S.I.

1.5 Electrical Supply

The boiler must be earthed.

All system components shall be of an approved type and all wiring to current I.E.E. wiring regulations.

External wiring must be correctly earthed, polarised and in accordance with the relevant standards.

In GB this is BS 6891.

In IE this is the current edition of I.S.813 "Domestic Gas Installations".

The boiler must be connected to a permanent 230V ac, 50Hz supply.

Connection of the whole electrical system of the boiler, including any heating controls, to the electrical supply must be through one common isolator.

Isolation should be by a double pole switched fused spur box, with a minimum gap of 3mm for both poles. The fused spur box should be readily accessible and preferably adjacent to the appliance. It should be identified as to its use.

Alternatively connection can be made through an unswitched shuttered socket and 3A fused 3 pin plug both to the current issue of BS1363 may be used, provided they are not used in a room containing a bath or shower.

WARNING - Under no circumstances must any mains voltage be applied to any of the terminals on the voltage free heating controls connection plug, see section 10 Electrical Connections.

1.6 Condensate Drain

A plastic drain pipe must be fitted to allow discharge of condensate to a drain.

Condensate should, if possible, be discharged into the internal household draining system. If this is not practical, discharge can be made externally into the household drainage system or a purpose designed soak away, see section 9.2 for more details.

1.7 Heating System Controls

It is recommended that a programmer and room thermostat control the boiler.

Thermostatic radiator valves may be installed, however they must not be fitted in a room where the room thermostat is located.

Note: All systems must have at least one radiator not fitted with a thermostatic valve.

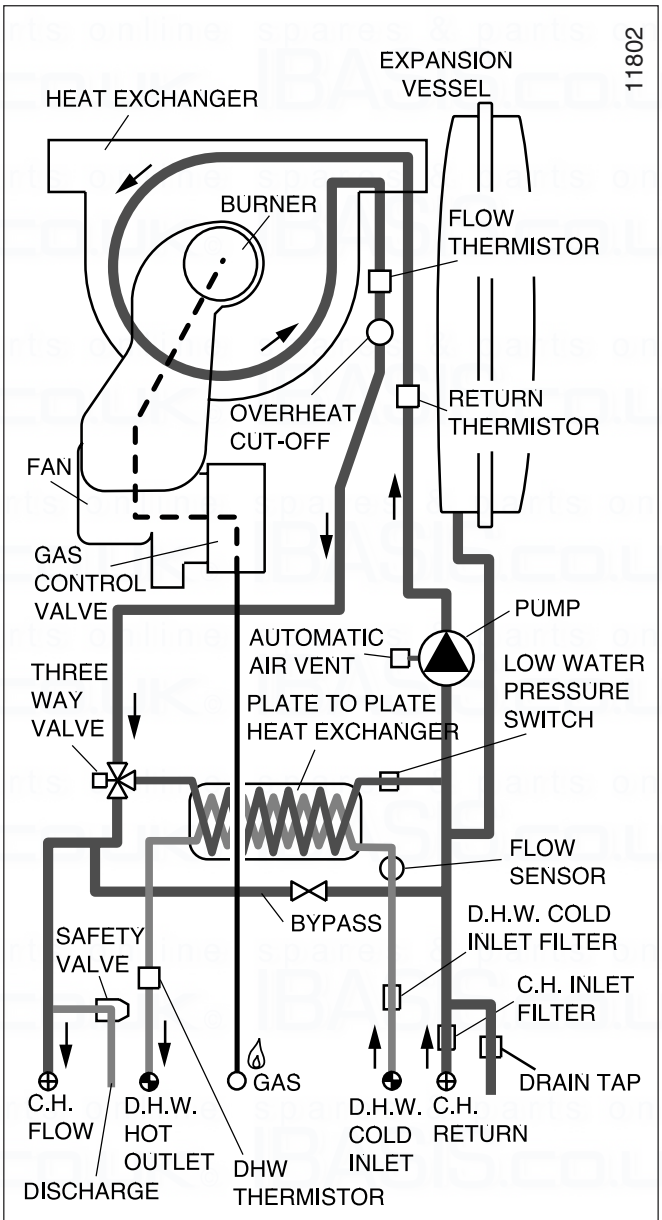

SCHEMATIC LAYOUT OF BOILER Diagram 1.3

Note: For further information, see the current issue of the Building Regulations, approved document L1 (in the UK) and the references:

1) GIL 59, 2000: Central heating system specification (CheSS) and

2) GPG 302, 2001: Controls for domestic central heating system and hot water. BRECSU.

2 Boiler Location and Ventilation

2.1 Location

This boiler is not suitable for fitting outdoors.

This boiler may be installed in any room, although particular attention is drawn to the installation of a boiler in a room containing a bath or shower where reference must be made to the relevant requirements.

In GB this is the current I.E.E. WIRING REGULATIONS and BUILDING REGULATIONS.

In IE reference should be made to the current edition of I.S.813 "Domestic Gas Installations" and the current ETCI rules.

The boiler must be mounted on a flat wall, which is sufficiently robust to take its total weight, see section 1 General Information, Data Table 1.

2.2 Clearances

The boiler should be positioned so that at least the minimum operational and servicing clearances are provided, see diagram 2.1.

Additional clearances may be beneficial around the boiler for installation and servicing.

For flue installations where external access is not practicable, consideration should be given for the space required to insert the flue internally, which may necessitate clearance larger than those specified in diagram 2.1.

2.3 Timber Frame Buildings

If the boiler is to be installed in a timber frame building it should be fitted in accordance with the Institute of Gas Engineers document IGE/UP/7/1998. If in doubt seek advice from the local gas undertaking or Halstead Boilers Ltd.

2.4 Room Ventilation

The boiler is room sealed, so when it is installed in a room or space, a permanent air vent is not required.

2.5 Cupboard or Compartment Ventilation

Due to the high efficiency and hence low casing temperature of this boiler, cupboard or compartment ventilation is not necessary.

Leave existing air vents.

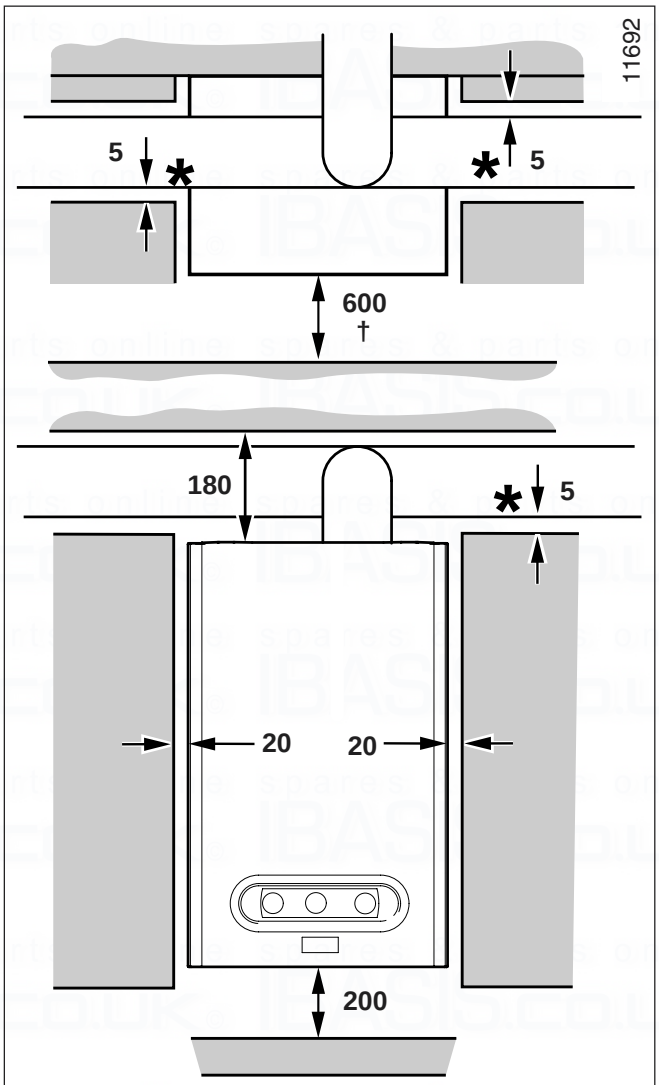

* Increase to 25mm clearance from combustible material.

† A removable compartment door can be placed at least 5mm in front of the appliance.

MINIMUM CLEARANCE FROM PERMANENT SURFACES

Diagram 2.1

3 Flue Location and Ventilation

3.1 Flue Position and Length

The standard horizontal flue is fitted onto the top of the boiler using the flue elbow.

See diagrams 3.1and 3.2 to determine whether a standard flue can be used.

An elevated flue system can be installed with the addition of extension kits, see section below, flue options.

When extension pipes are used the flue system must be designed to have a continuous fall to the boiler of at least 2.5° to allow condensate to run back into the boiler and out via the drain.

3.2 Internal Flue Installation

The flue can be installed from inside the building, when access to the outside wall face is not practicable.

3.3 Flue Options

There are various flue systems to choose from, as follows:

Standard horizontal flue kit - Pt. No. 956065

Vertical flue terminal kit - Pt. No. 956064

1 Metre Extension Kit - Pt. No. 956067

0.5 Metre Extension Kit - Pt. No. 956066

45° Flue Bend Pack - Pt. No. 956069

90° Flue Bend Pack - Pt. No. 956068

Additional accessories are available.

See Halstead "Flue Options Guide" for configurations available.

WALL THICKNESS 'X' = 75 TO 550mm

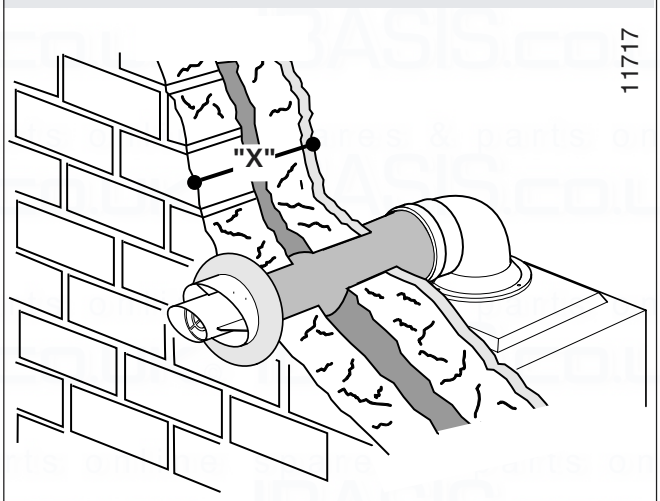

REAR FLUE - STANDARD Diagram 3.1

DISTANCE 'Y' = 335 TO 725mm - LEFT

DISTANCE 'Y' = 315 TO 725mm - RIGHT

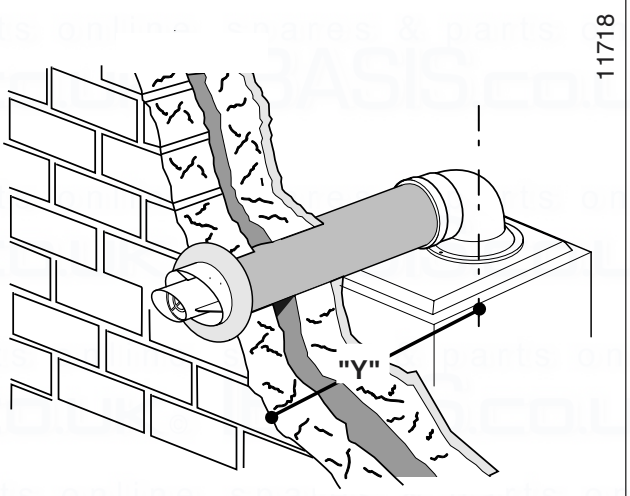

SIDE FLUE - STANDARD Diagram 3.2

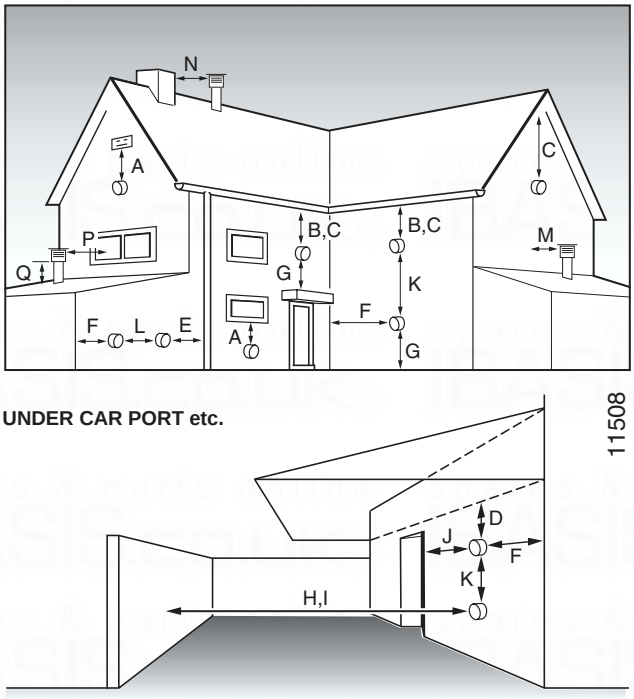

MINIMUM SITING DIMENSIONS FOR FANNED FLUE TERMINALS POSITION **MM**

HORIZONTAL FLUES

A	DIRECTLY BELOW, ABOVE OR HORIZONTALLY TO AN OPENING, AIR BRICK, OPENING WINDOW, AIR VENT, OR ANY OTHER VENTILATION OPENING	300
B	BELOW GUTTER, DRAIN/SOIL PIPE	75
C	BELOW EAVES	200
D	BELOW A BALCONY OR CAR PORT	200
E	FROM VERTICAL DRAIN PIPES AND SOIL PIPES	150
F	FROM INTERNAL/EXTERNAL CORNERS OR TO A BOUNDARY ALONGSIDE THE TERMINAL	300
G	ABOVE ADJACENT GROUND OR BALCONY LEVEL	300
H	FROM SURFACE OR A BOUNDARY FACING THE TERMINAL	600
I	FACING TERMINALS	1200
J	FROM OPENING (DOOR/WINDOW) IN CAR PORT INTO DWELLING	1200
K	VERTICAL FROM A TERMINAL	1500
L	HORIZONTALLY FROM A TERMINAL	300

VERTICAL FLUES

M	FROM ADJACENT WALL TO FLUE	300
N	FROM ANOTHER TERMINAL	600
P	FROM ADJACENT OPENING WINDOW	1000
Q	ABOVE ROOF LEVEL	300

Diagram 3.3

3.4 Terminal Position

The minimum acceptable siting dimensions for the terminal from obstructions, other terminals and ventilation openings are shown in diagram 3.3. For Ireland the minimum distances for flue terminal positioning must be those detailed in I.S.813 "Domestic Gas Installations".

The terminal must be exposed to the external air, allowing free passage of air across it at all times.

Being a condensing boiler some pluming may occur from the flue outlet. This should be taken into consideration when selecting the position for the terminal.

Carports or similar extensions of a roof only, or a roof and one wall, require special consideration with respect to any openings, doors, vents or windows under the roof. Care is required to protect the roof if made of plastic sheeting. If the carport comprises of a roof and two or more walls, seek advice from the local gas supply company before installing the boiler.

3.5 Terminal Guard

A terminal guard is required if persons could come into contact with the terminal or the terminal could be subject to damage.

If a terminal guard is required, it must be positioned to provide minimum of 50mm clearance from any part of the terminal and be central over the terminal.

The guard should be similar to that shown in diagram 3.4.

A suitable guard is manufactured by: -

Tower Flue Components

Morley Rd.

Tonbridge

Kent

TN9 1RA.

Size: 280mm x 280mm x 270mm.

TERMINAL GUARD

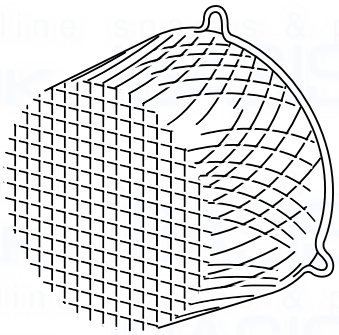

Diagram 3.4

4 Heating System

4.1 General

The boiler is for use only with sealed central heating systems.

The safety valve is an integral part of the boiler and it cannot be adjusted.

The digital readout on the controls fascia indicates the system pressure when there is no demand.

The circulation pump is integral with the boiler.

All domestic hot water circuits, connections, fittings must be in accordance with the relevant standards and water supply regulations.

For GB: Guidance G17 to G24 and recommendation R17 to R24 of the Water Regulations Guide.

For IE: The current edition of I.S.813 "Domestic Gas Installations".

4.2 Expansion Vessel

The boiler has an integral expansion vessel with a capacity of 8 litres (1.76 gallons), with a charge pressure of 0.5bar.

Note: The expansion vessel volume depends on the total water system volume and the initial system design pressure. To check if an additional expansion vessel is required, an accurate calculation of vessel size is given in the current issue of BS5449 and BS7074 Part 1.

Guidance on vessel sizing is also given in the current issue of BS5449 and BS7074 Part 1, for IE refer to the current edition of I.S.813 "Domestic Gas Installations".

4.3 Flow Rate

If it is necessary to alter the flow rate, the system can be fitted with a lockable balancing valve in the main flow or return pipes shown as valve “A” in diagram 4.1. The flow rate through the boiler must not be allowed to fall below that given in table 3.

4.4 Bypass

The boiler is fitted with an adjustable automatic bypass. Ensure that under no circumstances does the flow rate drop below the figure specified, refer to table 3 and section 11.6.

Table 3. Flow Rate
MINIMUM FLOW RATE 774 litres/hr.
This is equal to 20°C differential at maximum heat input.

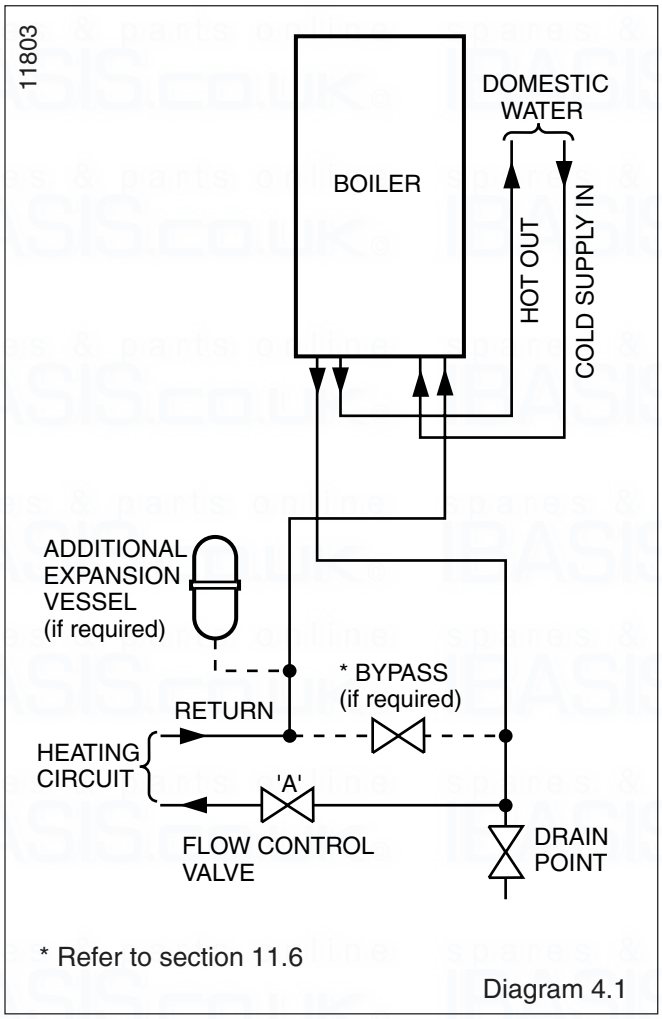

Diagram 4.1

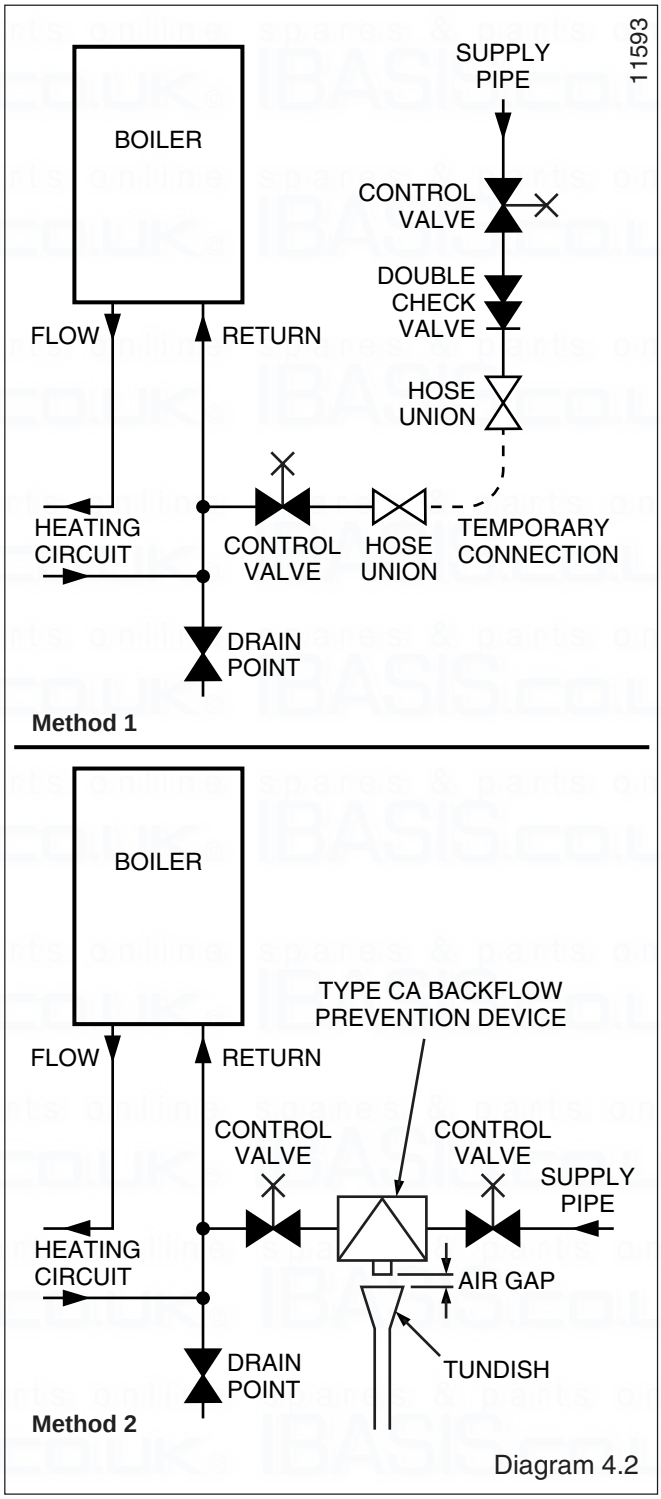

Diagram 4.2

4.5 Filling the Sealed System

Provision for filling the system at low level must be made, see diagram 4.2. There must be no permanent connection to the mains water supply, even through a non-return valve.

NOTE: It is important that fittings used for connection to potable water comply with the water undertakings requirements.

4.6 Water Treatment

In the case of an existing installation, it is **ESSENTIAL** that prior to installing the new boiler the system is thoroughly flushed. For optimum performance after installation of a new system, the boiler and its associated central heating system should also be flushed. Flushing should be carried out in accordance with BS7593: 1992 using a cleanser such as Sentinel X300 or X400, Fernox Superfloc or Salamander corrosion guard cleaner.

For long-term corrosion protection, after flushing, an inhibitor suitable for stainless steel exchangers should be used, refer to the current issue of BS 5449 and BS 7593 on the use of inhibitors in central heating systems. Examples are Sentinel X100 Fernox or Salamander corrosion guard inhibitor.

4.7 Draining Tap

A draining tap must be provided at the lowest points of the system, which will allow the entire system to be drained.

A drain tap for the appliance is provided as an integral part of the hydroblock, see diagram 12.11.

5 Domestic Hot Water System

5.1 Water Pressure

The maximum working pressure of the domestic hot water circuit is 10 bar. If the cold water supply pressure exceeds this, then a pressure-reducing valve must be fitted in the supply to the boiler.

5.2 'Hard' Water Areas

The temperatures within the heat exchanger are limited by the boiler control system to minimise scale formation within the hot water pipework. However, in areas where the water is 'hard' (i.e. more than 200mg/litre), it is recommended that the hot water setting is reduced and that a scale reducer is fitted.

Refer to the manufacturer's instructions or consult the local water company for additional advice.

5.3 Domestic Water Flow Rate

The water flow rate is governed to a maximum 10 litre/min by a restrictor fitted during installation of the boiler.

6.1 Unpacking of Boiler

IMPORTANT: With regards to the Manual Handling Operations, 1992 Regulations, the following lift operation exceeds the recommended weight for a one man lift.

Stand the boiler carton upright.

Cut and remove the securing straps and lift off the carton sleeve. Place aside any loose components until required.

Carefully lay the boiler on its back, remove the two front casing panel securing screws and lift off the panel from two retaining lugs, see diagram 6.3.

Remove the two inner casing panel securing screws at the bottom front of the panel, then lift off the two retaining lugs, see diagram 6.3.

6.2 Wall Template

Remove the wall template from the wall mounting pack and place in the desired position on a flat wall, giving due consideration to boiler clearances, see section 2.2.

6.3 Flue Hole Cutting

The **standard horizontal flue** is designed with an internal fall of 35mm/metre towards the boiler for disposal of condensate. If the standard flue length alone is being used then the flue hole of diameter 105mm can be cut in the position marked on the wall template.

For **standard side flues** the horizontal flue centre line on the wall template should be extended to the side wall, and the vertical centre of the flue hole marked at 176mm from the back wall.

For installations with external access, a 105mm diameter core drill can be used.

For installations with internal access only a 125mm diameter core drill should be used.

When using extension pipes with the horizontal rear flue, a core drill size of 125mm should be used to allow the extension pieces to slope at 35mm/metre (2.5°) towards the boiler.

For **extended side flues**, the flue hole centre should be determined by extending the dashed inclined line on the template to the side wall. This dashed line is drawn at 35mm/metre (2.5°) rise from the boiler. Where this line reaches the side wall, a horizontal line should be marked. The vertical centre line of the flue should then be marked at 176mm from the back wall, see diagram 6.1.

To allow for the flue passing through the wall at this angle a 125mm hole should be drilled irrespective of internal or external installation.

If necessary remove the wall template whilst drilling the flue hole.

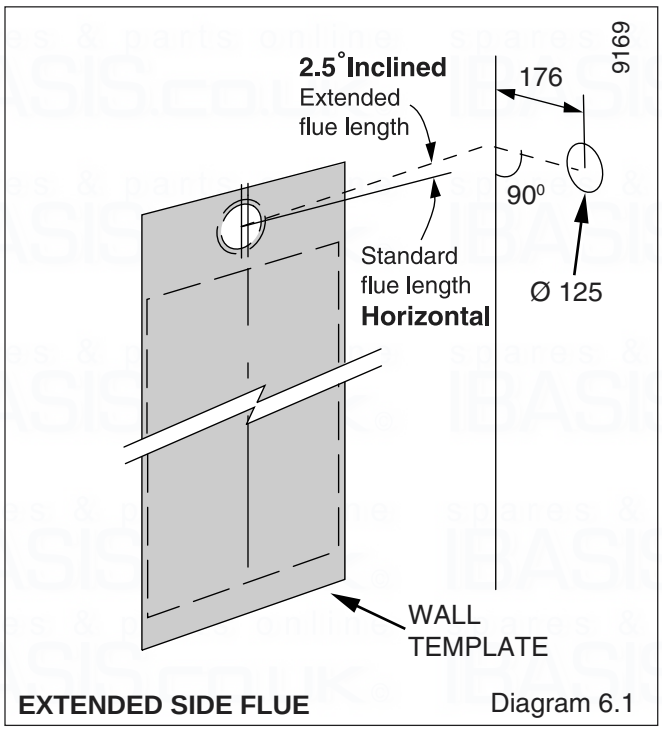

EXTENDED SIDE FLUE Diagram 6.1

6.4 Hanging Bracket Fixing

If previously removed, reposition the wall template over the flue hole and mark the position of the fixing holes for the hanging bracket, see diagram 6.2.

Drill the fixing holes and insert suitable wall plugs.

If gas and/or water pipes are to be plumbed through the rear wall, the holes must be drilled as marked on the wall template prior to fixing.

Fix the hanging bracket to the wall using suitable screws.

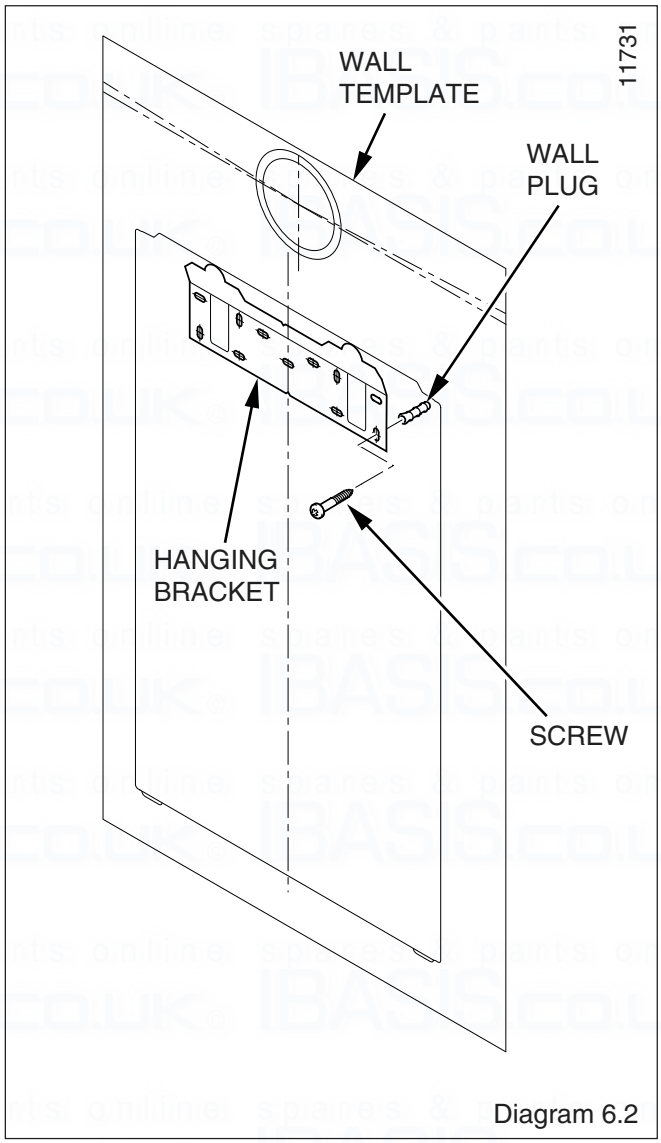

Diagram 6.2

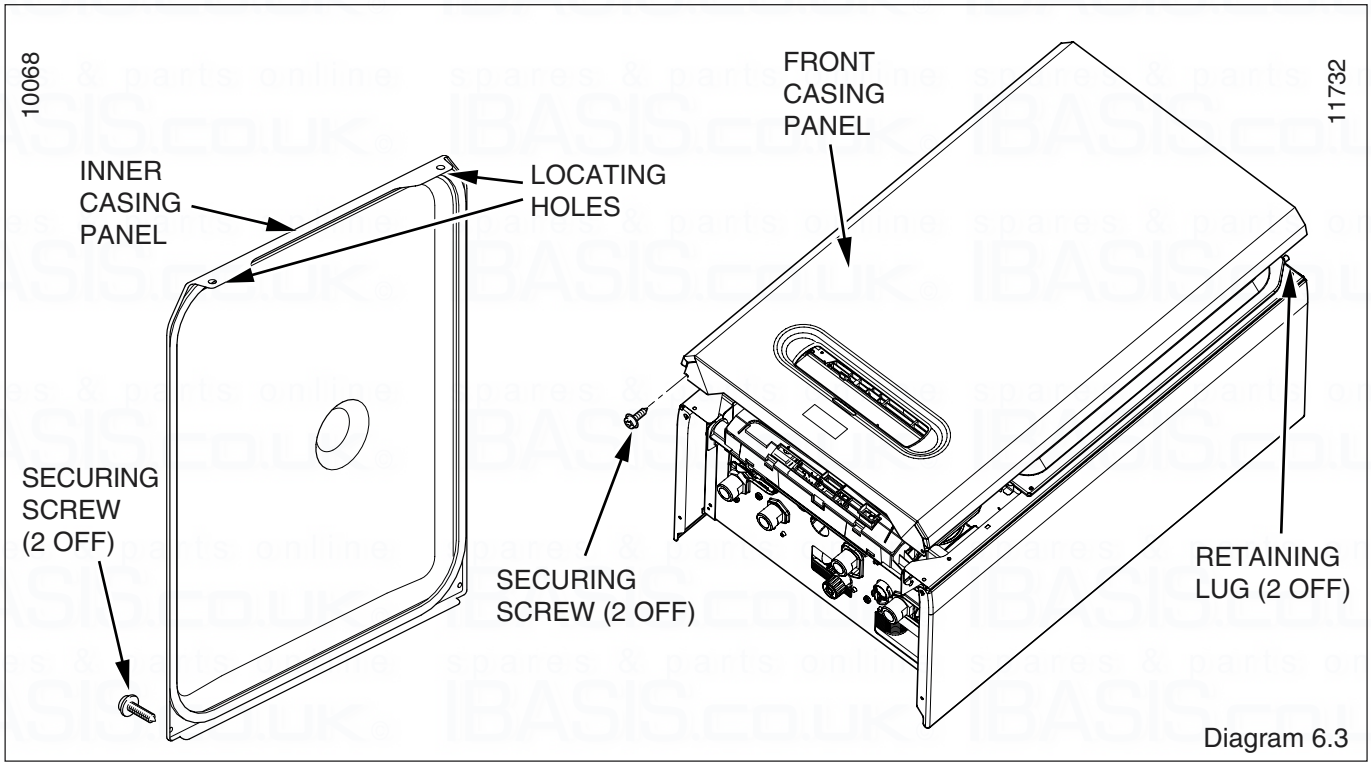

Diagram 6.3

7.1 Flue Length

All dimensions are in mm.

For rear or side flue, measure the distance from the outside wall to the butt joint of the flue elbow fitted on top of the boiler. A standard flue system will be suitable if the length measured 'Y' is less than 633mm, see diagrams 7.1 and 7.2.

If the measurement 'Y' exceeds 625mm then one or more extension pipes are required.

When cutting, the flue duct should be cut flush with the air duct.

7.2 Extension pipes

Refer to diagrams 7.3 and 7.4.

Note maximum permitted lengths

When extension pipes are required it should be noted that the length of the air ducts which butt together are 960mm long and this should be taken into account when calculating the length that requires cutting.

For example:

Distance from outside wall to butt joint on the flue elbow 'Y' = 2700 mm.

Standard flue length = 625 mm.

Extension pipe length = 960 mm.

Length required of final extension pipe =

2700 - (625 + 960 + 960) = 155mm.

In this example the final extension pipe would be cut to 155mm, this would be measured from the end of the air duct where the flue duct contains the 'o-ring' seal.

When cutting, the flue duct should be cut flush with the air duct at the opposite end to where the flue duct contains the 'o-ring' seal.

The system is made up from a standard horizontal flue kit and accessories. The accessories include flue extensions, bends 45° and 90° and fixing brackets.

The maximum permitted straight flue length is 4375 mm plus the standard horizontal flue. For each 90° or 45° x 2 bends fitted, the maximum length must be reduced by 1 metre.

Note: 45° x 2 bends can replace 1 x 90° if necessary. When using 90° bends any horizontal extension pipe should be inclined by a minimum of 2.5° fall towards the boiler to facilitate condense removal.

7.3 Flue Assembly

The flue assembly is a push fit design.

Remove all burrs from cut pipes.

Diagram 7.5 shows the components supplied in the standard kit and the flue adaptor.

Having cut the air and flue ducts as described in sections 7.1-7.2 assemble the flue as follows, the flue can be fitted externally or entirely from inside.

Fit the rubber sealing collar behind the locating lugs on the flue terminal, see diagram 7.5.

Push the flue assembly into the wall, externally or internally, initially until the end of the assembly protrudes a short way from the inside face of the wall. This will enable the inner rubber sealing collar to be positioned and allow the flue duct to be drawn back into the flue elbow after the boiler has been mounted.

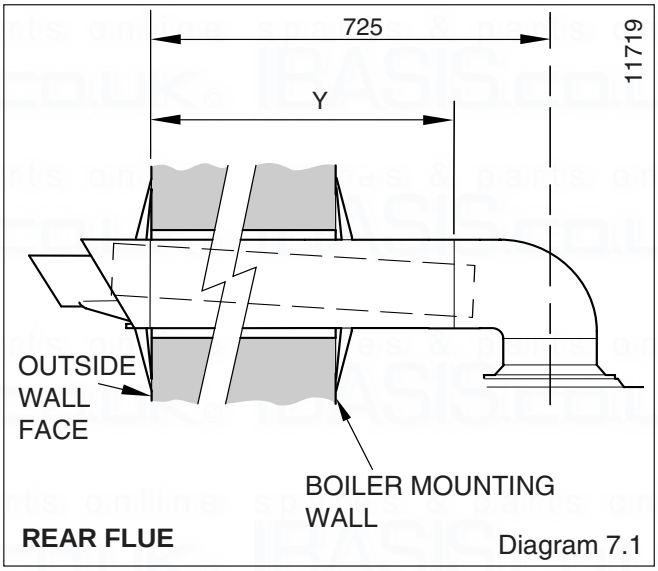

REAR FLUE — Diagram 7.1

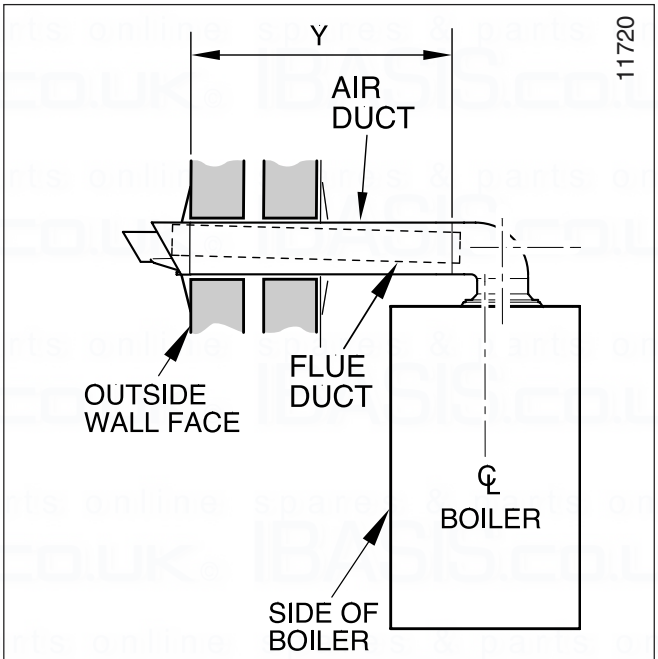

STANDARD SIDE FLUE — Diagram 7.2

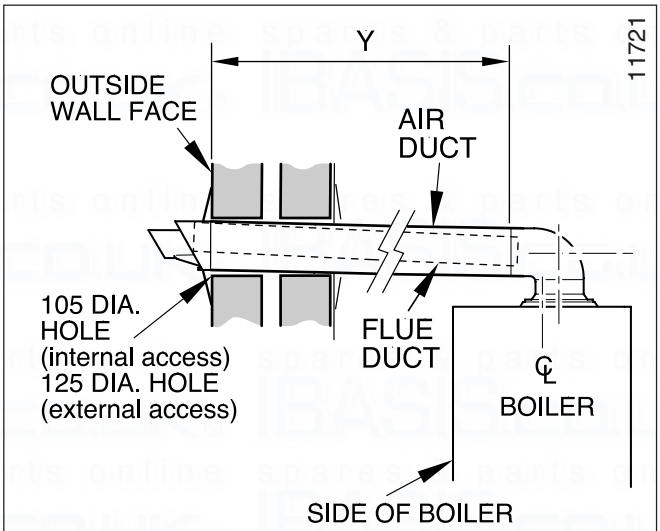

SIDE FLUE EXTENSION — Diagram 7.3

7.4 Flue Attachment To Boiler

Refer to section 8 and fix the boiler in position prior to completing the flue installation.

Refer to diagram 7.5. Secure the flanged flue elbow in position on top of the boiler with four torque headed screws supplied, making sure the nib fits into the locating slot in the boiler casing to ensure correct orientation.

Draw flue assembly from wall, slide flue duct into flue elbow. Moisten the seals with water for easy push fit.

Note: If the air and flue ducts have been correctly cut to the instructions given in sections 7.1-7.2 the rubber sealing collar should fit flush with the outside wall, check this.

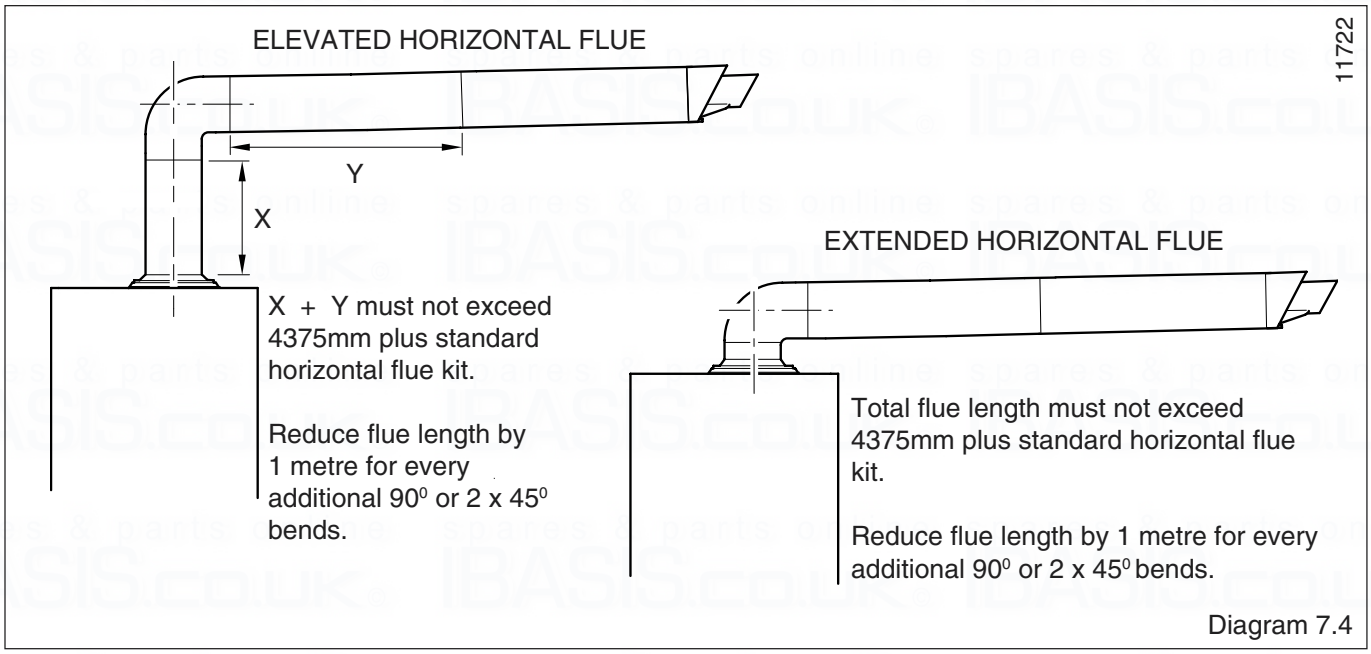

Diagram 7.4

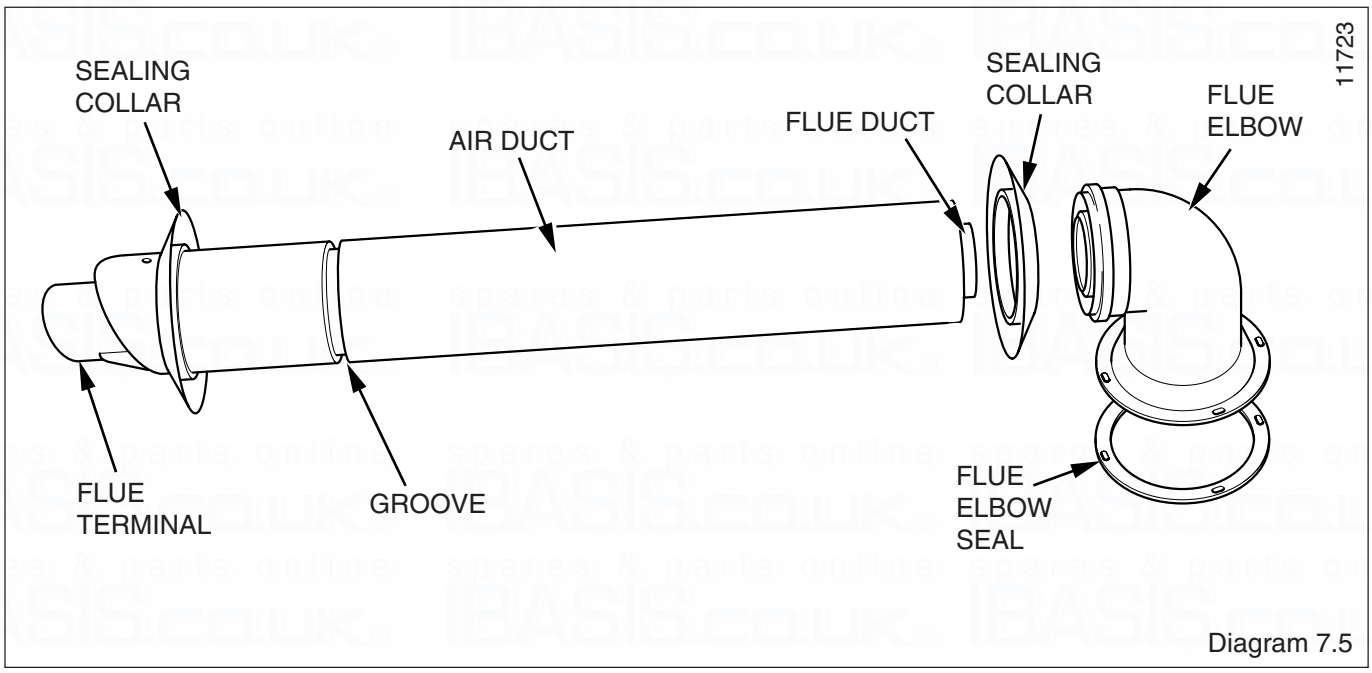

Diagram 7.5

8.1 Gas Connection

Before connection check supply of local gas.

The gas supply can be connected from below or through the wall at the rear of the boiler, the position is shown on the wall template.

Refer also to section 1.2.

Fit the sealing washer into the securing nut and make good the final connection to the gas service cock, see diagram 8.1.

Do not subject the gas service cock to heat.

Make sure the on /off lever is accessible.

The whole of the gas installation, including the meter, should be inspected, tested for soundness and purged in accordance with the current issue of BS6891 and in IE the current edition of I.S.813 "Domestic Gas Installations".

Refer also to section 1.2.

8.2 Water Connections

Provision is made for the water connections to be made from below or through an internal wall at the rear of the boiler, the positions are shown on the wall template. Copper tailpieces, service cocks and gaskets are supplied in packs at the bottom of the boiler packaging.

Flush out the domestic hot water and the heating systems before connecting to the boiler.

Make the connections to the domestic hot water and heating systems by fitting the sealing washers into the securing nuts and make good the final connection to the isolating valves, see diagram 8.1.

Do not subject the isolation valves to heat.

Make sure the drain point is accessible.

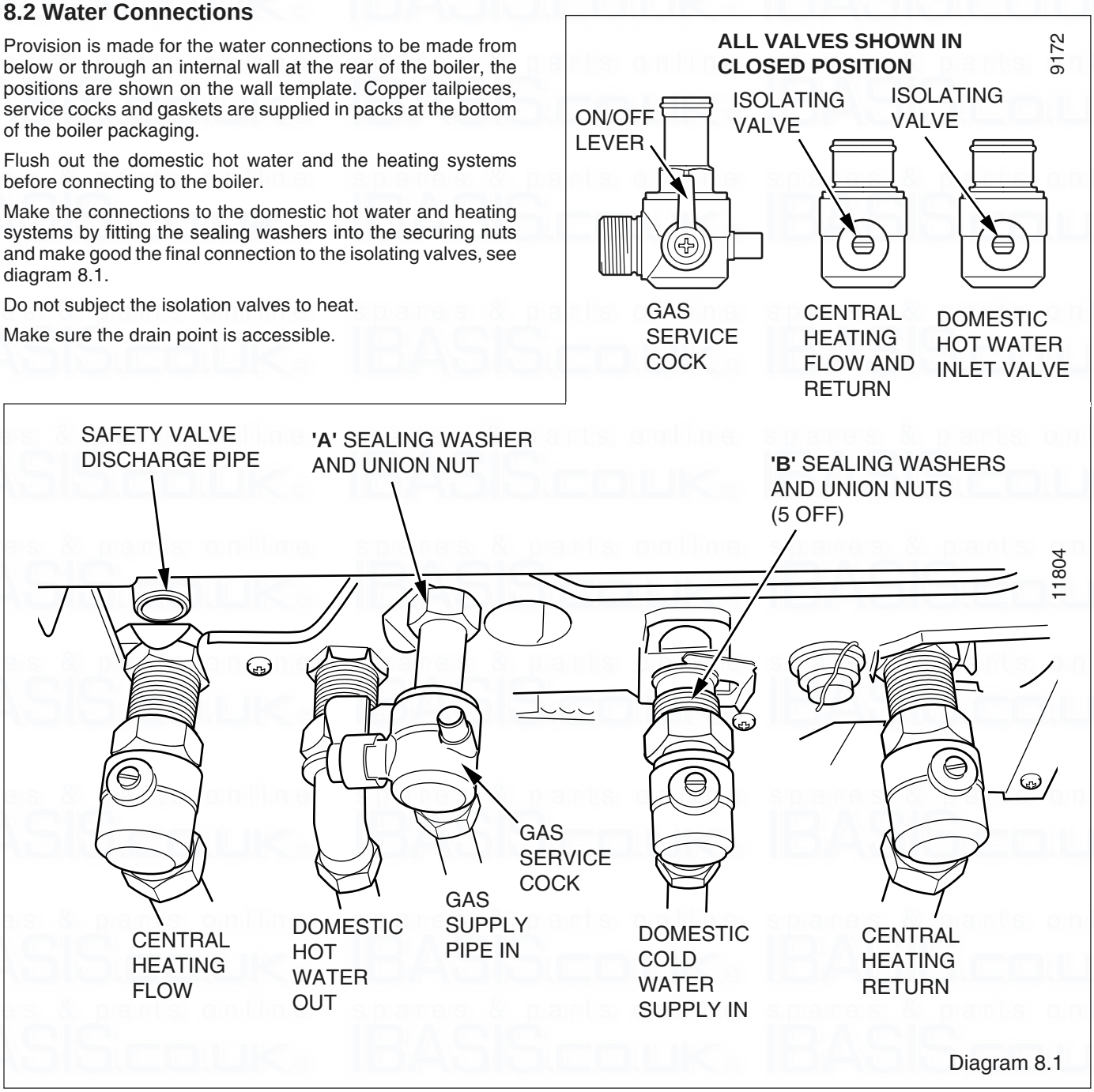

Diagram 8.1

8 Gas/Water Connections and Boiler Fixing

IMPORTANT: With regards to the Manual Handling Operations, 1992 Regulations, the following lift operation exceeds the recommended weight for a one man lift.

Having previously secured the hanging bracket to the wall, lift the boiler into position in the following manner.

Lean the top of the boiler slightly to the wall and position just above the hanging bracket. Allow the boiler to slowly move downwards until engaged in the hanging bracket.

Slowly swing the base of the boiler to the wall ensuring that the connections on the boiler line up with the 'A' gas and 'B' water isolation valves, see diagram 8.1. Fit sealing washers into the securing nuts and make good the final connections.

Fit the flow restrictor to the domestic cold water inlet cocks, see diagram 8.2.

Please refer to condensate connection before proceeding, see section 9.2.

Attach the flue as described in section 7.6.

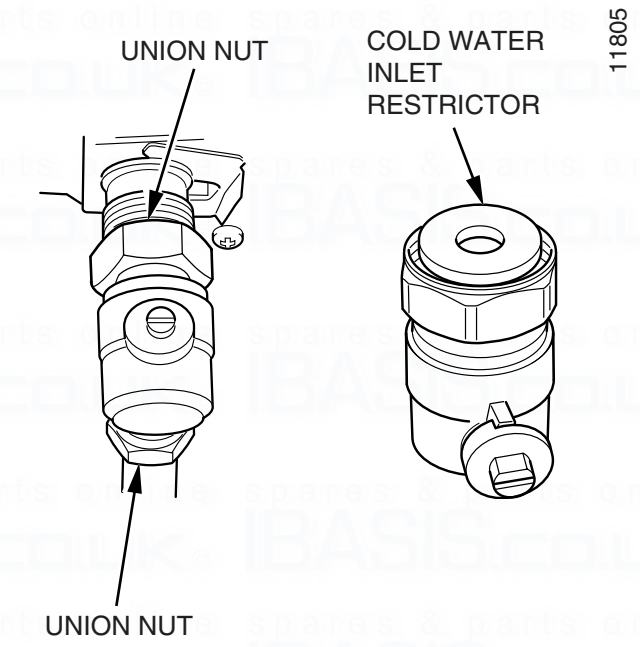

DOMESTIC COLD WATER IN ISOLATING VALVE Diagram 8.2

9 Safety Valve Discharge and Condensate Connections

9.1 Safety Valve Discharge

The pipe from the safety valve must not discharge above an entrance, window or any type of public access area.

A short discharge pipe is supplied loose with the boiler fittings pack. This must be extended, using not less than 15mm o.d. pipe, to discharge, in a visible position, outside the building, facing downwards, preferably over a drain, see diagram 8.1.

The pipe must have a continuous fall and be routed to a position so that any discharge of water, possibly boiling, or steam cannot create any danger to persons, damage to property or external electrical components and wiring.

To ease future servicing it is advisable to use a compression type fitting to extend the discharge pipe.

9.2 Condensate Drain Connection

The condensate drain connection is behind the pump at the rear of the boiler, see diagram 9.1. 21.5mm plastic overflow pipe should be used to fit into the drain connection on the condensate siphon and discharge condensate to a drain. The drain pipe should have a fall of a least 2.5° away from the boiler.

Condensate should, if possible be discharged into the household internal drainage system. If this is not practicable, discharge can be allowed into the external household drains or a purpose designed soak away.

It is recommended that any external condensate drain pipe is insulated and also preferably of 32mm diameter, to prevent freezing in adverse weather conditions.

The condensate is discharged periodically in 'slugs' by siphonic action.

It is not necessary to provide air breaks or extra traps in the discharge pipe as there is already a trap inside the boiler. Fitting an extra trap may cause the boiler siphon to work incorrectly. Refer to British Gas publication 'Guidance notes for the Installation of Domestic Condensing Boilers' for advice on the disposal of the boiler condensate.

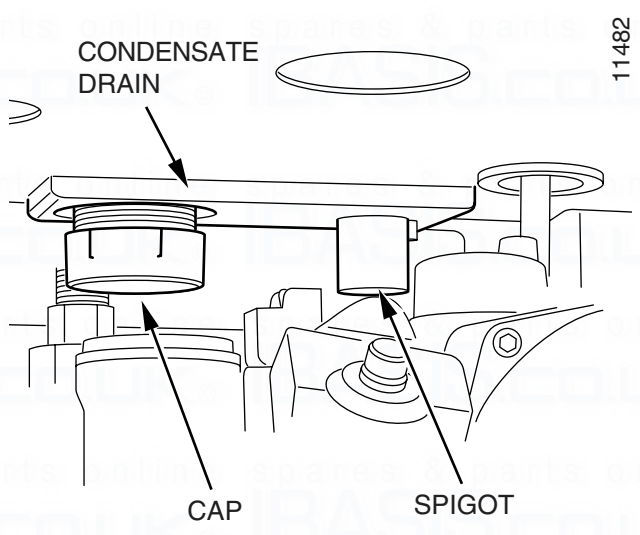

Diagram 9.1

10 Electrical Connections

WARNING: This appliance must be earthed. This appliance must be wired in accordance with these instructions. Any fault arising from incorrect wiring cannot be put right under the terms of the Halstead guarantee.

All system components must be of an approved type.

Electrical components have been tested to meet the equivalent requirements of the BEAB.

Do not interrupt the mains supply with a time switch or programmer.

Connection of the whole electrical system and any heating system controls to the electrical supply must be through a common isolator.

Isolation should preferably be by a double pole switched fused spur box having a minimum contact separation of 3mm on each pole. The fused spur box should be readily accessible and preferably adjacent to the boiler. It should be identified as to its use.

A fused three pin plug and shuttered socket outlet may be used instead of a fused spur box provided that:

a) They are not used in a room containing a fixed bath or shower.

b) Both the plug and socket comply with the current issue of BS1363.

10.1 Mains Cable

Important: The mains cable comes supplied with the boiler, however, if a replacement supply cable is required it must be purchased. Part No. S1008600.

10.2 External Controls (Mains Voltage)

WARNING: UNDER NO CIRCUMSTANCES MUST ANY MAINS VOLTAGE BE APPLIED TO ANY OF THE TERMINALS ON THE VOLTAGE FREE HEATING CONTROLS CONNECTION PLUG.

Remove the MAINS VOLTAGE HEATING CONTROLS CONNECTION PLUG (GREEN) from the fittings pack and install on the 230V interface PCB as the following text describes.

Gain access to the 230V interface by unclipping the fascia panel and hinging forward, see diagram 10.1.

Remove the wire link from the voltage free heating controls connector, see diagram 10.4 then connect as shown in diagram 10.5, then route the external control cable as shown on diagram 10.2.

Close the fascia panel and open the rear cover of control panel, see diagram 10.3.

Secure the external control cable in the strain relief, see diagram 10.4.

Thread the external control cable through rear of the control panel where the other cables exit, see diagram 10.3.

Close rear cover of control panel

External control should be fitted in accordance with the rules in force.

Refer to wiring diagram in section 13.

10.3 External Controls (Voltage Free)

WARNING: UNDER NO CIRCUMSTANCES MUST ANY MAINS VOLTAGE BE APPLIED TO ANY OF THE TERMINALS ON THE VOLTAGE FREE HEATING CONTROLS CONNECTION PLUG.

This boiler will operate continuously on heating as supplied, if the wire link (E), fitted between the two terminals of the heating controls connection, is left in place, see diagram 10.3.

External controls e.g. Room thermostat, frost thermostat etc. should be fitted in accordance with the rules in force.

Refer to diagram 10.5.

10.4 Electrical Connections - Testing

Carry out preliminary electrical system checks as below:

1. Test insulation resistance to earth of mains cables.
2. Test the earth continuity and short circuit of cables.
3. Test the polarity of the mains.

Please ensure the “Benchmark” logbook is completed and left with the user and the magnetic lighting instruction label is placed on the surface of the boiler casing.

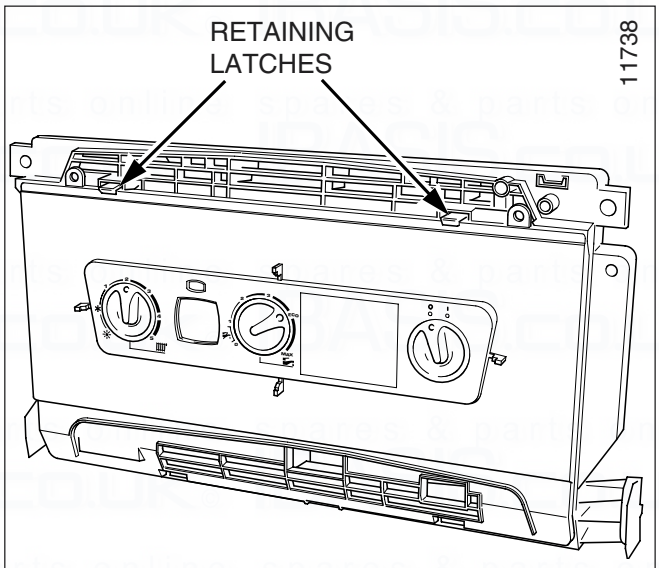

Diagram 10.1

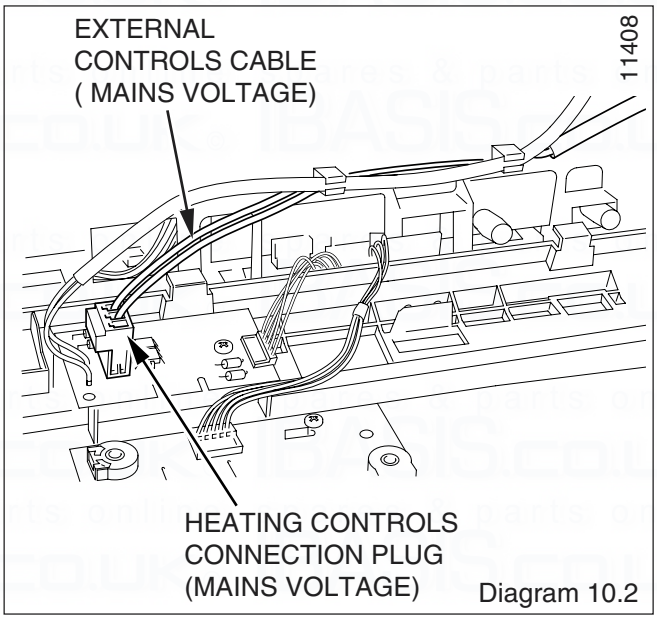

Diagram 10.2

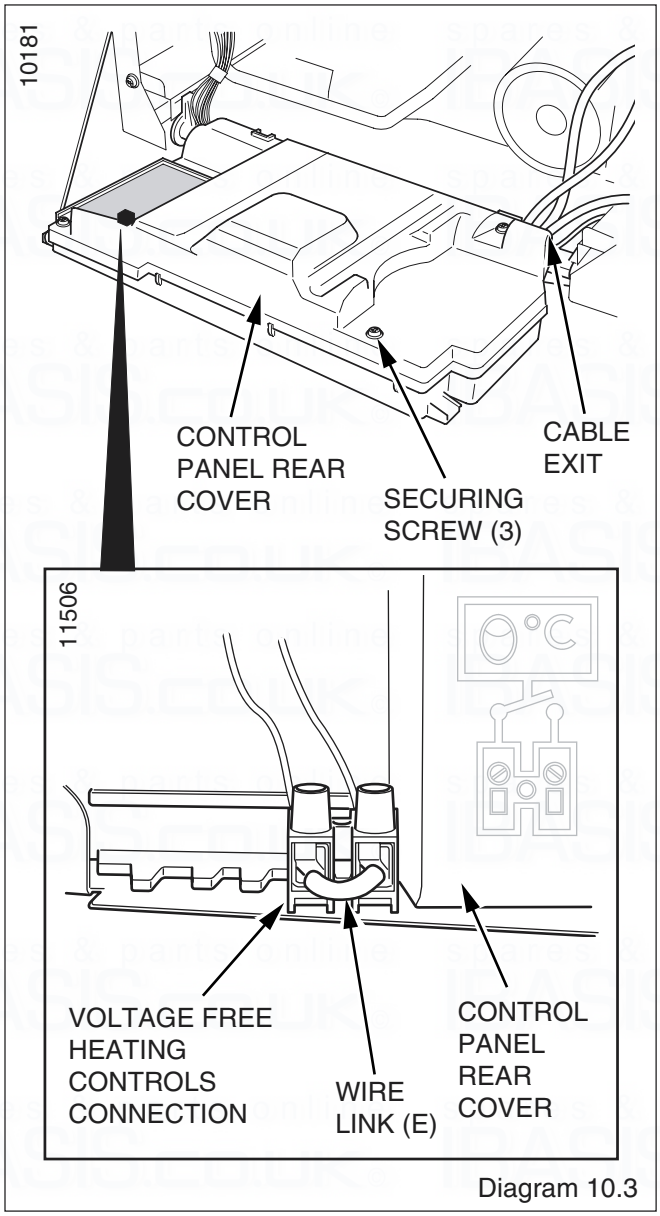

Diagram 10.3

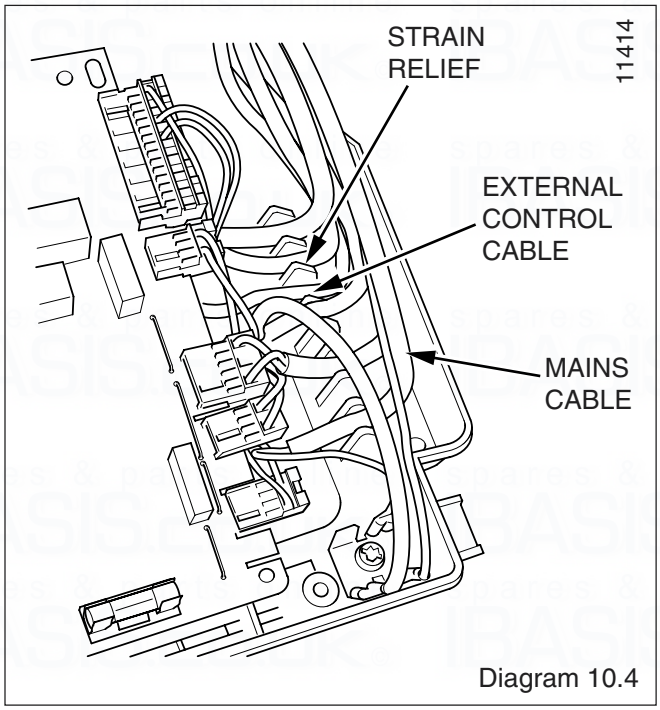

Diagram 10.4

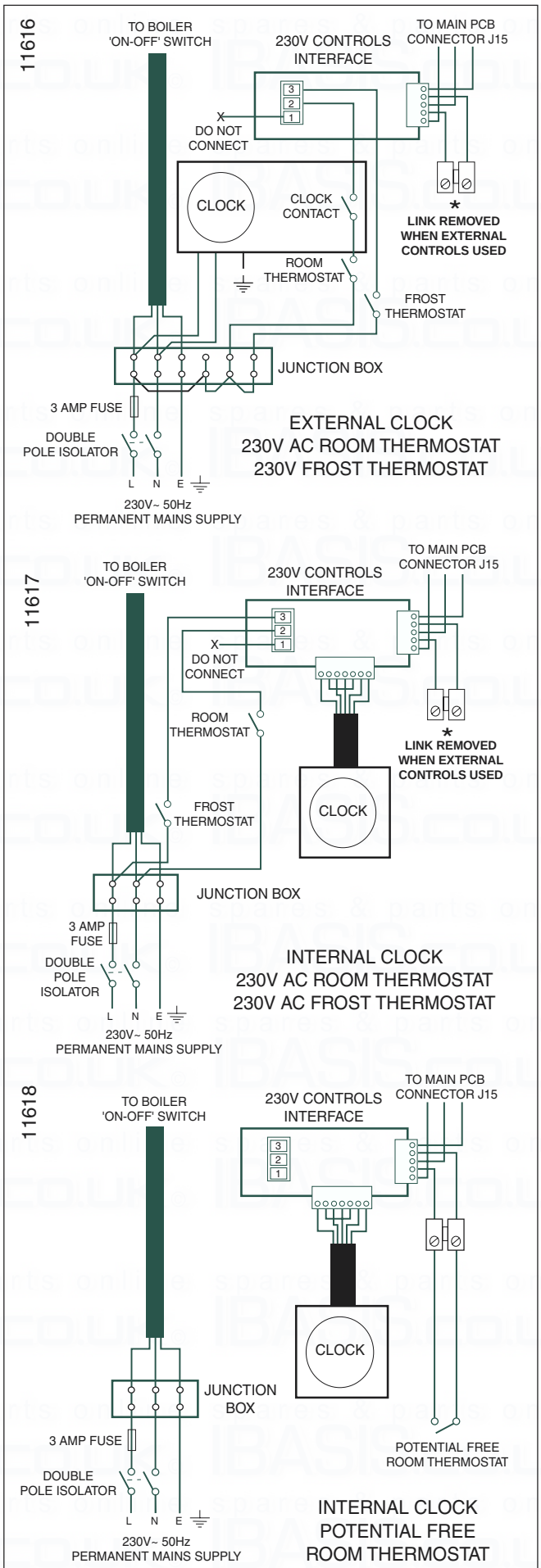

Diagram 10.5

11.1 Filling Domestic Water Circuit

Fully open any valves in the domestic water supply to the boiler.

Open the domestic water isolation valve, slot in line with the length of the valve, see diagram 8.1.

Open all hot water taps in turn and close them when water flows. Check for water soundness of the complete domestic water system.

The water flow rate is governed to a maximum 10 litre/min by a restrictor fitted into the boiler between the cold water isolating tap and the boiler, see diagram 8.2.

11.2 Filling the Heating Circuit

Open the two central heating isolating valves and domestic cold water inlet valve, slots in line with the length of the valve, see diagram 8.1

To enable the system pressure to be viewed, turn the Central heating temperature knob and hot water temperature knob to the off position.

Turn the mains electricity supply on to the appliance and ensure that the mains switch on the appliance fascia is set to the on position.

The system pressure should be viewed on the digital display on the front of the appliance, see diagram 1.

Make sure that the automatic air vent works correctly and that the black cap is loosely fitted to allow air to escape, see diagram 11.1.

Check the heating system and boiler connections for water soundness.

11.3 Preparation for Lighting

Isolate the boiler from the mains electrical supply.

Test for gas soundness and purge air from the gas supply. Turn on the gas service cock, see diagram 8.1.

11.4 Initial Lighting

The lighting procedure of the boiler is fully automated.

Check that all external controls are calling for heat. If an integral clock/timer is fitted check that it is correctly programmed and if necessary overridden to provide heat.

Ensure that both the central heating and the domestic hot water control knobs are turned OFF.

Turn on the mains electrical supply and the mains reset knob to (I) on the controls fascia.

Turn the central heating hot water knob to (I) MINIMUM.

The digital display will show water temperature in central heating demand.

The fan should start and after a few seconds the ignition will commence

If the burner fails to light the fan will stop. Initially this may be due to air in the gas supply line. The boiler will automatically have three attempts at ignition.

If necessary turn the reset switch to the off position (O), then back to the on position (I) and the boiler will restart.

After the boiler has lit, allow to warm at minimum temperature setting to purge any air from the system.

Once the system has been purged of air turn the Domestic hot water control knob to the desired position and open a hot water tap. The three way valve will move to hot water supply and the display will read system pressure. Check that hot water is available and then close the hot water tap.

Turn the central heating knob to the desired temperature.

The appliance will then continue to fire in central heating until the user controls are satisfied or there is another demand made for hot water.

Note that after first power up the firing sequence for central heating changes. After one minute stabilisation time the boiler will ramp slowly to full rate rather than going immediately to full rate. This is an adaptive feature to cope with small system requirements.

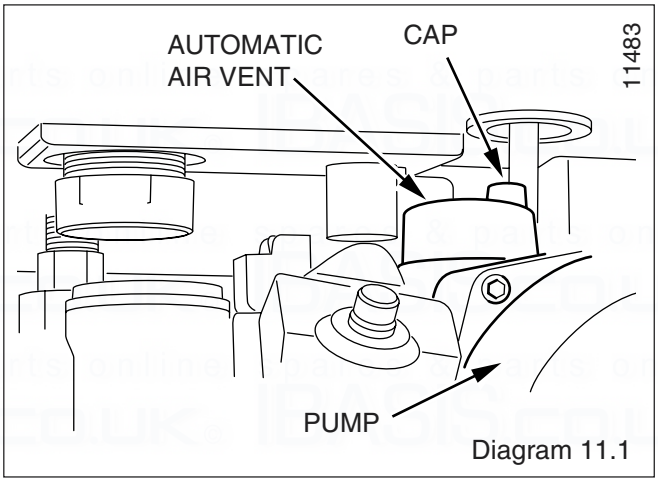

Diagram 11.1

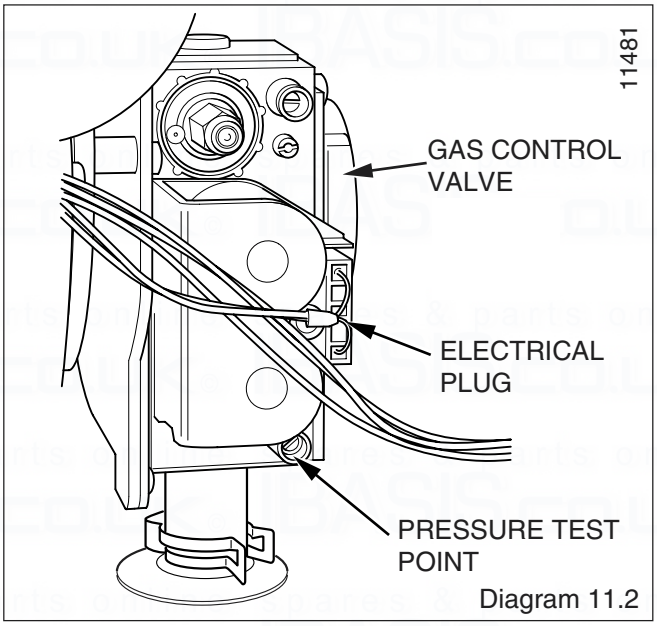

Diagram 11.2

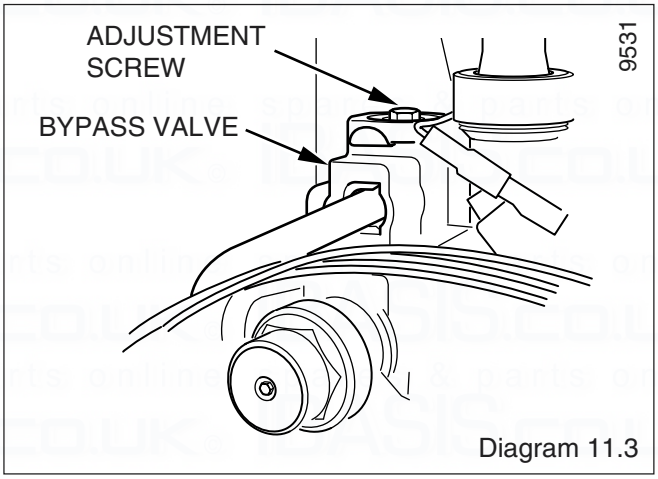

Diagram 11.3

If power is turned OFF and back ON again (first demand) there will be no ramp. Every further demand, the boiler will ramp for 10 minutes.

11.5 Testing - Gas

Should any doubt exist about the gas rate, check it using the gas meter test dial and stop watch at least 10 minutes after the burner has lit, making sure that all other gas burning appliances and pilot lights are off.

The approximate gas rate: 2.7m^3/h (96ft^3/h) in C.H. mode, is for guidance only.

The gas valve is factory set and should need no adjustment. It should be checked that the supply pressure is 20mb when the boiler is firing at full rate. This can be achieved by turning on several hot water taps and checking the inlet pressure at the tapping on the gas valve shown in diagram 11.2. Turn taps off and disconnect pressure gauge.

Note that the burner pressure cannot be measured at the gas valve as it is altered by the suction of the fan and modulated according to demand.

11.6 Testing - Heating System

Check that all remote controls are calling for heat. The boiler will fire automatically. Fully open all radiator valves, flow control valve 'A', if fitted, see diagram 4.1.

Balance the radiators as required and if fitted adjust valve 'A' to give the required system differential. Turn off all radiators that can be shut off by the user and check to see if less than the maximum differential allowed of 20°C can be achieved across flow and return.

This boiler has a built in bypass, see diagram 11.3.

The boiler is supplied with the bypass open half a turn. It should not be necessary to adjust the bypass, but if required turn the adjustment screw clockwise to close the valve, see diagram 11.3.

Allow the system to reach maximum temperature then switch off the boiler by isolating from the electrical supply.

Drain the entire system rapidly whilst hot, using the drain tap at the lowest part of the system. Fill and vent the system as described previously in section 11.2.

Lock or remove the handle from control valve 'A', if fitted.

Replace inner casing panel and front casing panel.

11.7 User Controls and Options

The mains reset on/off switch is used to restart the boiler after a fault condition has occurred, i.e. ignition failure, low water pressure or high water temperature.

The central heating and domestic hot water control knobs allow the user to set the temperatures in each mode.

Note: If there is no demand the digital display shows the water pressure.

Temperature Display

The digital display normally shows the operating temperature of the unit when there is a central heating demand.

Holiday Mode

Normal mode uses the domestic hot water and central heating temperatures selected.

By turning the domestic hot water and central heating control knobs to minimum setting the holiday mode is set up. However, frost protection and pump exercise programme remain active. To resume normal operation after a holiday period, return the control knobs to their original position. By doing this the DHW will operate and DHW will set at maximum temperature.

11.8 Pump Exercise Program

After a power cut or every 24 hour in holiday mode the three way valve will switch and the pump will run for one minute to prevent the components from sticking. This will also occur during normal operating if there is no domestic or central heating demand for more than 24 hours.

11.9 Frost Protection

The boiler has a built in frost protection programme as long as the electricity and gas are left switched on.

This device operates the appliance pump when the temperature inside the boiler falls below 7°C and circulates water around the appliance only.

If the temperature falls to 3°C the burner is lit and water circulates around the heating system.

When the temperature inside the appliance reaches 10°C the burner will shut down and after a short period the pump will stop.

This device primarily protects the boiler. Any other exposed areas of the system should be protected by a separate frost thermostat.

11.10 Instruct the User

Instruct and demonstrate the lighting procedure and advise the user on the safe and efficient operation of the boiler.

Instruct on and demonstrate the operation of any heating system controls.

Advise the user on the use and maintenance of any scale reducer and pass on any relevant instructional documents.

Advise that to ensure the continued efficient and safe operation of the boiler it is recommended that it is checked and serviced at regular intervals. The frequency of servicing will depend upon the installation conditions and usage, but in general, once a year should be enough.

Draw attention, if applicable, to the current issue of the Gas Safety (Installation and Use) Regulations, Section 35, which imposes a duty of care on all persons who let out any property containing a gas appliance in the UK.

It is the Law that any servicing is carried out by a competent person.

Advise the user that, like all condensing boilers this appliance will produce a plume of condensation from the flue terminal in cool weather. This is due to the high efficiency and hence low flue gas temperature of the boiler.

Advise the user of the precautions necessary to prevent damage to the system, boiler and the building, in the event of the heating system being out of use during frost or freezing conditions.

Advise the user that the permanent mains electrical supply SHOULD NOT be switched off, as the built in frost protection and pump/valve saver program would not be operable.

Adjust the boiler temperature control and any system controls to their required settings. In addition it is necessary to complete the "Benchmark" logbook.

For IE, it is necessary to complete a "Declaration of Conformity" to indicate compliance to I.S.813. An example of this is given in the current edition of I.S.813.

Reminder, leave these instructions and the 'Benchmark' logbook with the user.

12.1 General

Refer to Table 2 Section 1 General Information. Measurement of the products of combustion can be achieved by connection of a probe to the combustion analyser test point, see diagram 12.1.

Before commencing with a service or replacement of parts the boiler should be isolated from the electrical supply and the gas supply should be turned off at the gas isolation valve, see diagram 8.1.

All routine servicing requirements can be achieved by the removal of the front panel and inner panel only. To remove simply undo the two screws on the underside of the front panel and lift off, see diagram 6.3. Undo the two screws on the front of inner panel and lift off, see diagram 6.3.

Unless stated otherwise any part removed during servicing should be replaced in the reverse order to removal.

Servicing should always include the removal of any debris from the condensate pipe and siphon.

After completing any servicing of gas carrying components, ALWAYS test for gas soundness and carry out a functional test of the controls.

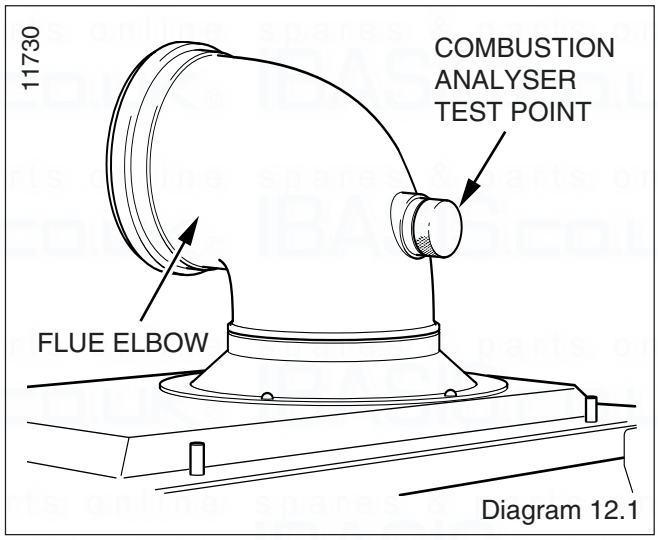

Diagram 12.1

12.2 Spark Electrode

Disconnect the electrode lead and two securing screws. Withdraw the spark electrode carefully from the combustion chamber, see diagram 12.2 and 12.5.

Inspect the tips for damage.

Clean away any debris and check the spark gap is 3.5 to 4.5 mm.

Check the electrode gasket for signs of damage and replace if necessary.

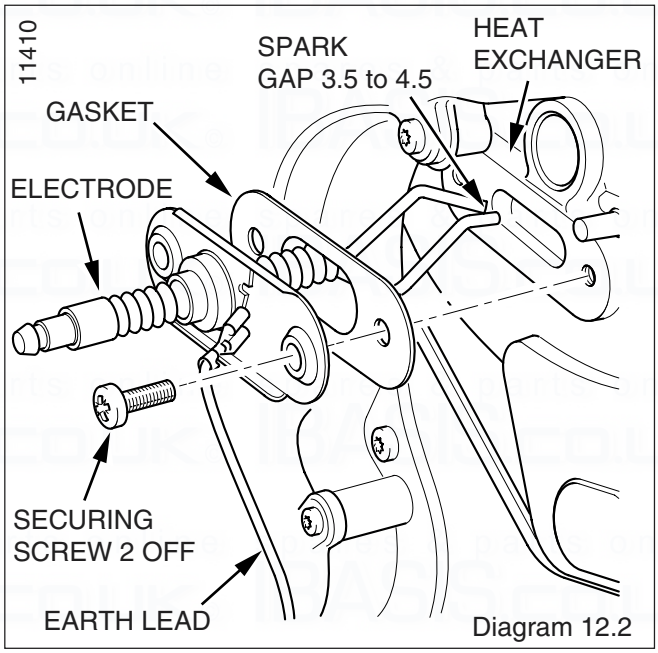

Diagram 12.2

12.3 Burner

Drop down the control panel into the service position, see diagram 12.13.

Disconnect the gas supply at the gas service cock, see diagram 8.1.

Remove the two gas pipe retaining clips, one located below gas valve and the other one located on the underside of the boiler chassis, see diagram 12.4.

Pull sealing grommet down gas pipe, see diagram 12.4.

Push the gas pipe upwards further into gas valve connection and then rotate anti-clockwise (looking down) until the gas pipe end is over the large hole in boiler chassis, see diagram 12.4.

Withdraw the gas pipe from gas valve connection and remove.

Note: When replacing ensure that the sealing grommet, situated below the gas valve is correctly re-seated.

Disconnect the gas control valve electrical plug at the gas control valve.

Disconnect the electrical leads from the fan.

Remove the five combustion chamber front retaining nuts, see diagram 12.5.

Gently remove the fan, gas control valve and burner assembly from the combustion chamber, see diagram 12.3.

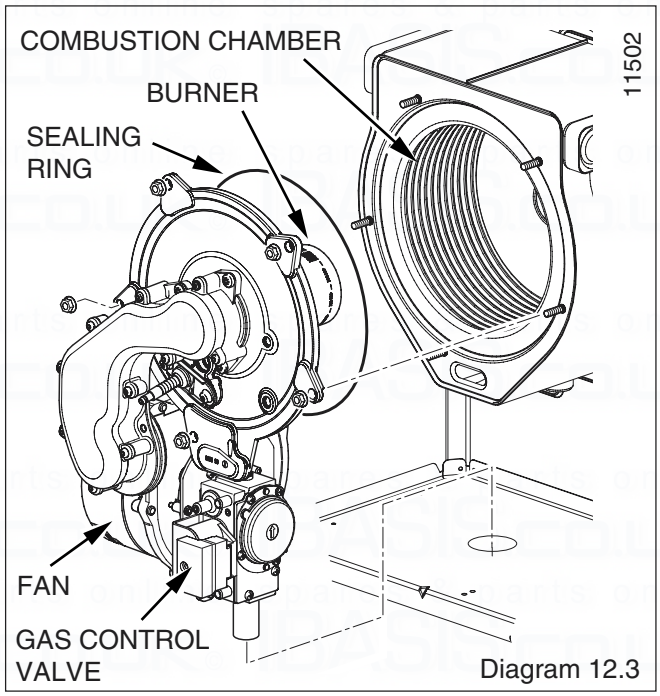

Diagram 12.3

Clean the burner with a soft brush taking great care not to damage the front insulation. DO NOT use wire or sharp instruments to clean the holes of the burner.

Inspect the burner for any signs of damage.

Inspect the sealing rings and replace if necessary.

Removal of the burner is not necessary during a normal service.

NOTE: IF THE BURNER HAS TO BE REMOVED IT WILL REQUIRE A NEW GASKET WHEN REFITTED.

12.4 Combustion Chamber and Heat Exchanger

Refer to diagram 12.3.

Remove loose debris from combustion chamber using a soft brush and vacuum cleaner. Carefully flush by spraying water any remaining debris through the condensate trap (Ensure the water is kept away from electrical components).

12.5 Condensate Drain

Refer to diagram 12.8.

Remove the clips securing the flexible tubes to the siphon adaptor by twisting the clips slightly to disengage the clip jaws from each other.

Remove black flexible tubes from siphon adaptor.

Lift off the siphon adaptor.

Remove the drain connection downstream of the condense drain.

Remove DC fan supply, refer to section 14.5.

Remove the condense trap securing screws.

Lift up and carefully remove the condense drain taking care not to spill any water which may be in the unit. As the unit is lifted remove the flexible connection on the outlet.

Remove the cap at the base of the condense trap.

Remove any solids found.

Remove the float to clean it.

Flush water through the trap to remove any remaining solids.

Check for any debris in the outlet pipe of the condensate drain and clean as necessary.

Reassemble and refit the condensate drain.

When refitting the cap ensure that a watertight seal is achieved, but do not use excessive force.

Remove siphon adapter from flexible tubes.

Using a suitable container flush the heat exchanger by spraying water until the water appears clear in the container.

Refit the siphon adapter and flexible connections.

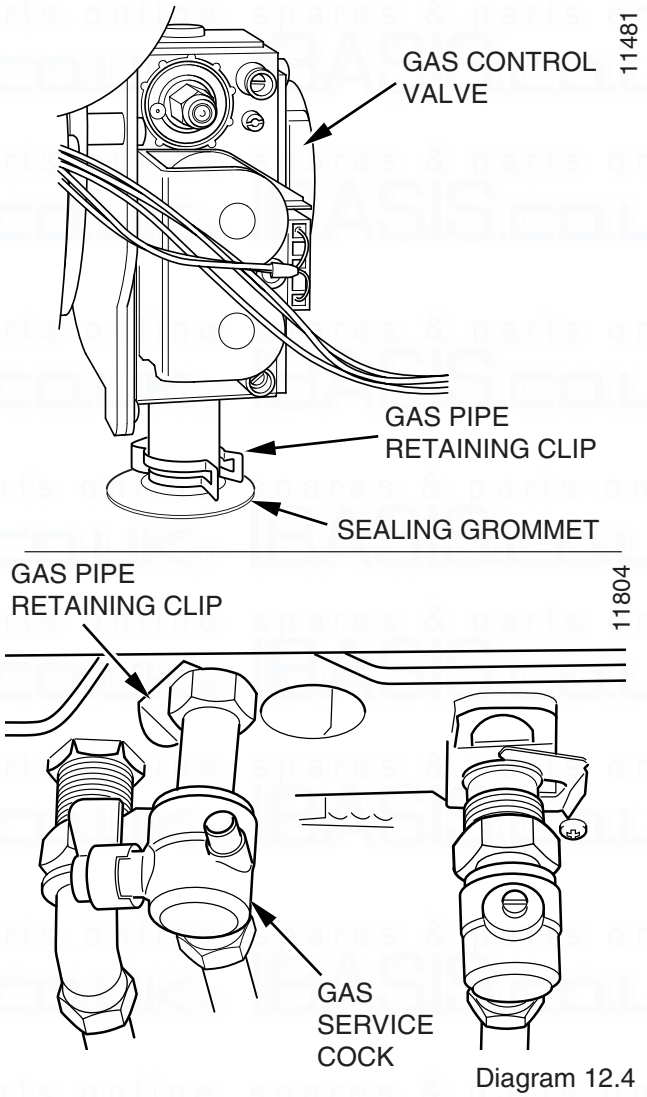

Diagram 12.4

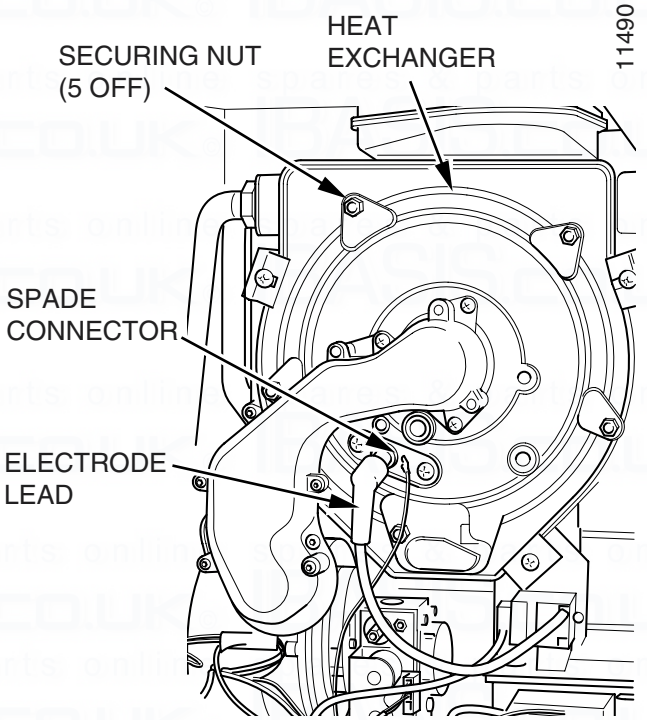

Diagram 12.5

12.6 Combustion Check.

Once the appliance has been reassembled (apart from the front and inner casing panels) connect a CO_2 combustion analyser to the test point on the flue adapter, see diagram 12.1.

Turn on the gas service cock, see diagram 8.1.

With the power off and the appliance cold, unclip the controls fascia and hinge it down to reveal the potentiometers on the rear of the User interface, see diagram 12.7. Take care not to allow the fascia to drop down and damage the wiring.

Turn on the electrical supply.

Ensure external controls are calling for heat. The boiler should fire automatically.

Allow the boiler to fire for a minimum of 60 seconds and then, using an electrical screwdriver, rotate the service potentiometer fully clockwise, see diagram 12.7. This will allow the digital display to indicate the 'flashing' fan speed on the appliance fascia.

In the fully clockwise position the display should be indicating the maximum fan speed of the appliance, in central heating mode this should be 39 (3900rpm). With domestic hot water max. demand this should be 57 (5700rpm). Check the CO_2 value, which should be 8.8% ± 0.2%.

Note that with the inner case front panel fitted the combustion readings will increase slightly to 9.0% ± 0.3%.

If adjustment proves necessary then proceed as follows.

Any adjustment to the gas valve should only be carried out by a qualified person.

Refer to diagram 12.6.

Adjust the maximum rate CO_2 with the throttle to 8.8%. (Rotate anti-clockwise to increase).

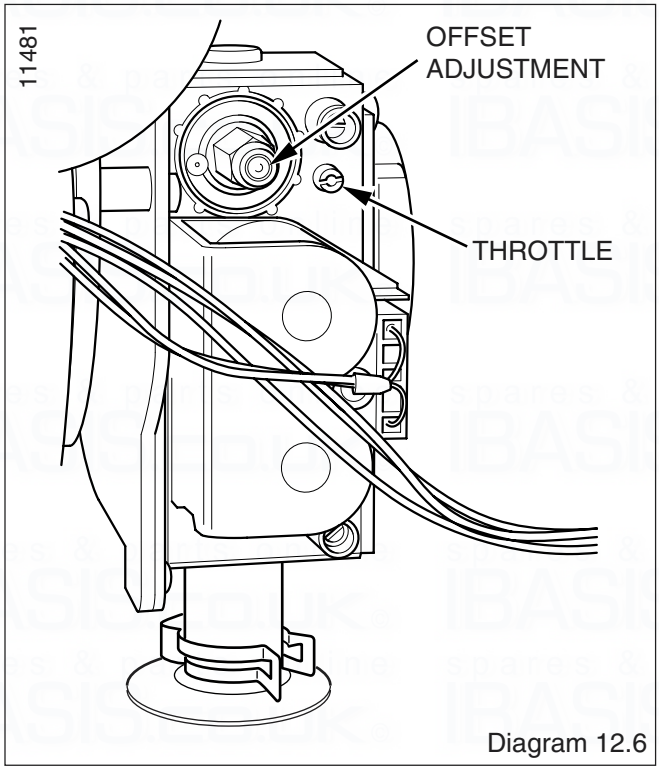

Diagram 12.6

Rotate the service potentiometer fully anti-clockwise. Hold it in this position for about 5 seconds before rotating the service potentiometer clockwise to the mid-point or 3 o'clock position. The fan should reduce to 1200 rpm which will flash '12' on the LCD display.

Check the CO_2 value, which should be 8.8% ± 0.2%.

If adjustment proves necessary then proceed as follows.

Adjustment of the CO_2 at minimum rate is very coarse so carefully adjust the CO_2 with the offset adjustment to 8.8%, see diagram 12.6.

Rotate the service potentiometer fully clockwise, see diagram 12.7 and recheck the maximum rate combustion, which should be 8.8% ± 0.2%.

After checking combustion rotate the service potentiometer fully anti-clockwise so that the display indicates the water temperature.

Replace the cap on the test point and refit the control cover rear panel.

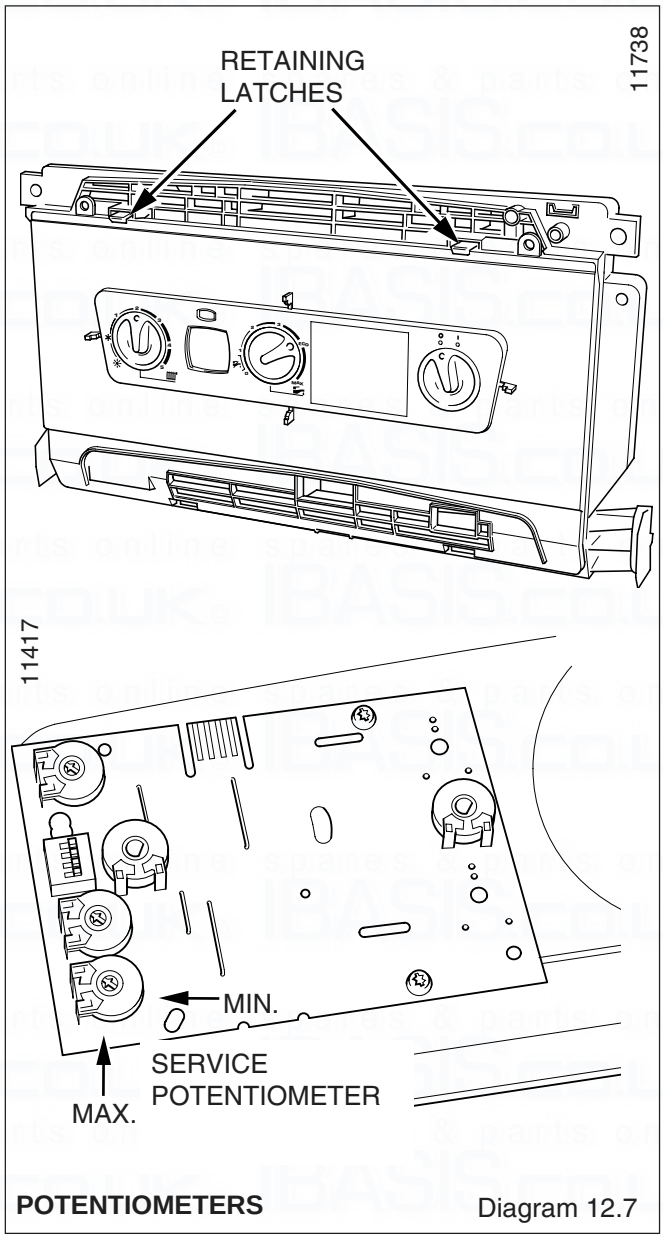

POTENTIOMETERS Diagram 12.7

12.7 Domestic Cold Water Inlet Filter

If the water flow rate through the appliance has reduced it may be necessary to clean or replace the water inlet filter.

Turn off the electrical supply to the boiler.

Refer to section 12.10 and drain the domestic hot water circuit.

Slide out the securing clip, which holds the filter in its housing to the left of the pump, remove the filter to clean or renew if necessary, see diagram 12.9.

Replace the filter into its housing and replace the securing clip.

Open the cold water isolating valve and test the Domestic Hot Water circuit for soundness.

Check for leaks.

12.8 Central Heating Filter

Turn off the electrical supply to the boiler.

Refer to section 12.9 and drain the heating circuit of the boiler.

Remove the filter retaining clip and filter clean or renew if necessary, see diagram 12.10.

Refit the filter, ensuring the correct orientation. The flat and hole in the filter as shown in diagram 12.10. Secure with retaining clip.

Open the heating flow and return isolating valves and refill, vent and pressurise the heating circuit. See section 11.2.

Check for leaks.

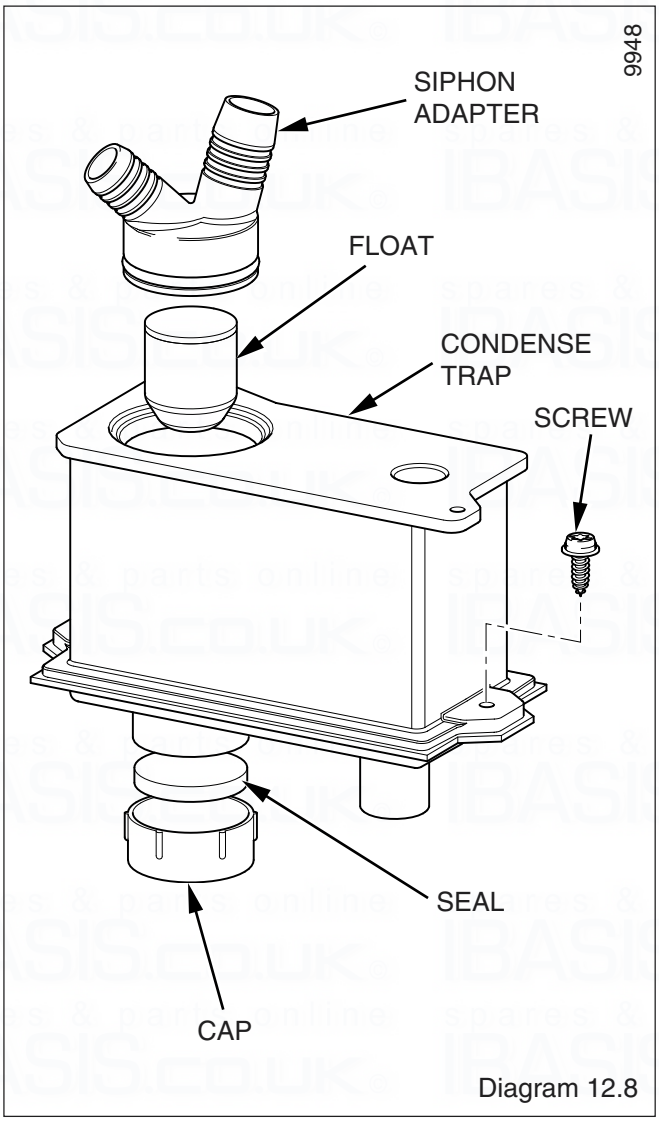

Diagram 12.8

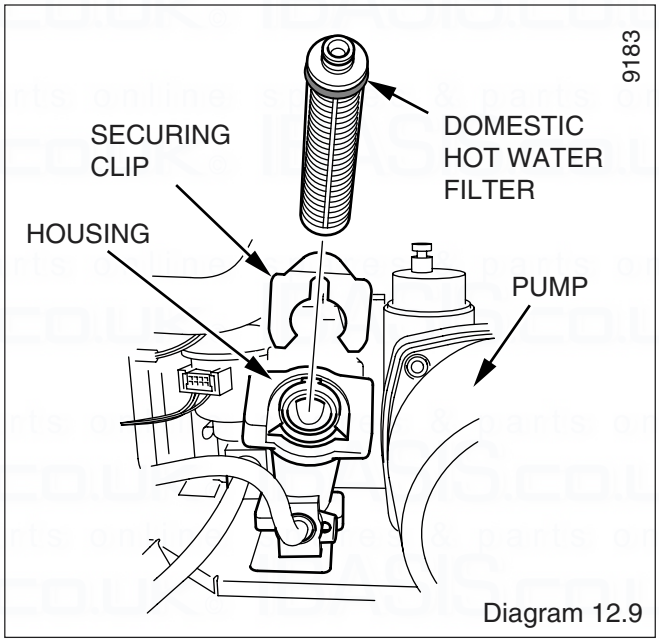

Diagram 12.9

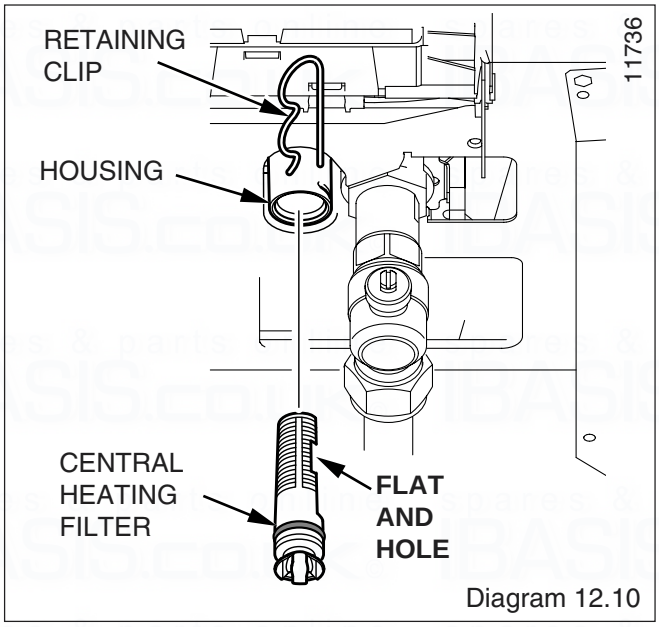

Diagram 12.10

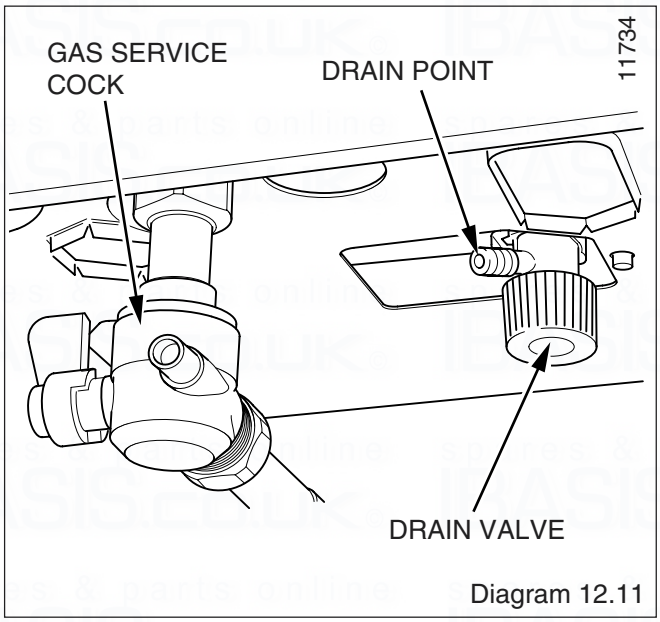

Diagram 12.11

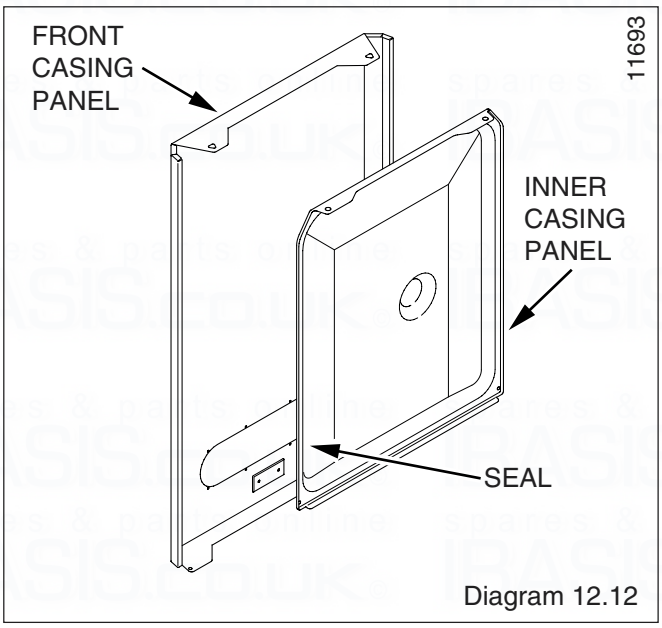

Diagram 12.12

12.9 Draining of Boiler Heating Circuit

Drain down the Heating Circuit of the boiler only, by closing the heating flow and return isolating valves, see diagram 8.1.

Attach a length of hose to the drain point and open the drain valve, see diagram 12.11.

After servicing or replacing parts, close the drain valve and remove the hose. Open the heating flow and return isolating valves and refill, vent and pressurise the heating circuit. See section 11.1.

Check for leaks.

12.10 Draining of Boiler Hot Water Circuit

Drain the Domestic Hot Water circuit by closing the cold-water isolation valve.

Open one or more hot water taps to drain the hot water circuit.

After servicing or replacing parts open the cold-water isolation valve and slowly open a hot water tap to remove air. Close the hot water tap and check for any leaks.

12.11 Inner Casing Panel Seal Check.

Check the condition of the seal, replace as required.

To replace remove the old seal, thoroughly clean the casing sufaces. Fit the new seal, it is supplied to the correct length, see diagram 12.12.

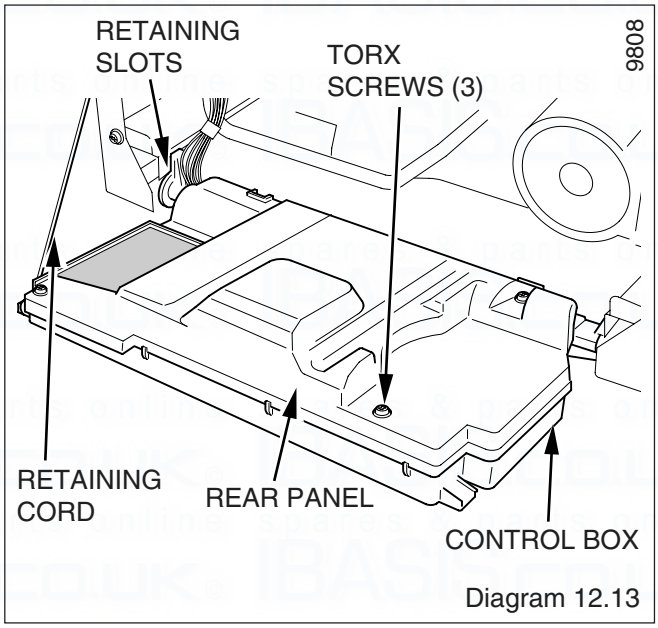

Diagram 12.13

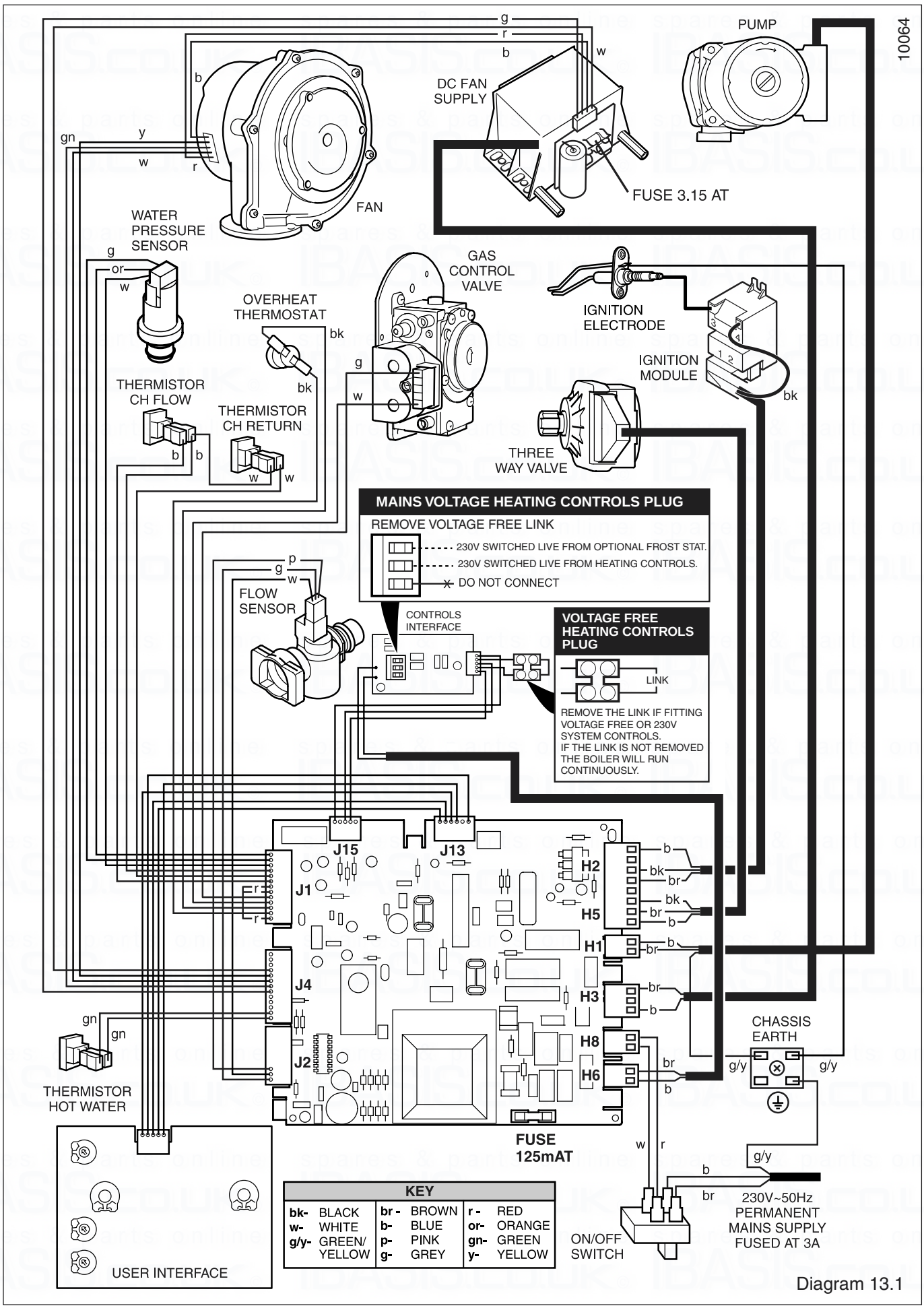
10064
PUMP
DC FAN SUPPLY
FUSE 3.15 AT
FAN
WATER PRESSURE SENSOR
GAS CONTROL VALVE
IGNITION ELECTRODE
IGNITION MODULE
OVERHEAT THERMOSTAT
THERMISTOR CH FLOW
THERMISTOR CH RETURN
THREE WAY VALVE
MAINS VOLTAGE HEATING CONTROLS PLUG
REMOVE VOLTAGE FREE LINK
230V SWITCHED LIVE FROM OPTIONAL FROST STAT.
230V SWITCHED LIVE FROM HEATING CONTROLS.
DO NOT CONNECT
FLOW SENSOR
CONTROLS INTERFACE
VOLTAGE FREE HEATING CONTROLS PLUG
LINK
REMOVE THE LINK IF FITTING VOLTAGE FREE OR 230V SYSTEM CONTROLS.
IF THE LINK IS NOT REMOVED THE BOILER WILL RUN CONTINUOUSLY.
J15
J13
J1
J4
J2
H2
H5
H1
H3
H8
H6
CHASSIS EARTH
THERMISTOR HOT WATER
FUSE 125mAT
USER INTERFACE
ON/OFF SWITCH
230V~50Hz PERMANENT MAINS SUPPLY FUSED AT 3A
KEY
bk- BLACK
w- WHITE
g/y- GREEN/ YELLOW
br - BROWN
b- BLUE
p- PINK
g- GREY
r - RED
or- ORANGE
gn- GREEN
y- YELLOW

Diagram 13.1

13 Fault Finding

Before trying to operate the boiler make sure that :

- All gas supply cocks are open and that the gas supply has been purged of air.
- The heating system pressure is at least 0.7 bar.
- Check filters are clean.

WARNING. Always isolate the boiler from the electrical supply before carrying out any electrical replacement work.

Always check for gas soundness after any service work.

Should there be any doubt about the voltage supply to any of the components, it is possible to carry out a simple electrical test to ensure all is operational in that area.

To carry out the electrical test, gain access to the Control Box PCB, as follows:

Hinge down the control box.

Remove Torx screws and unhook the rear panel.

For layout of PCB, see diagram 12.1.

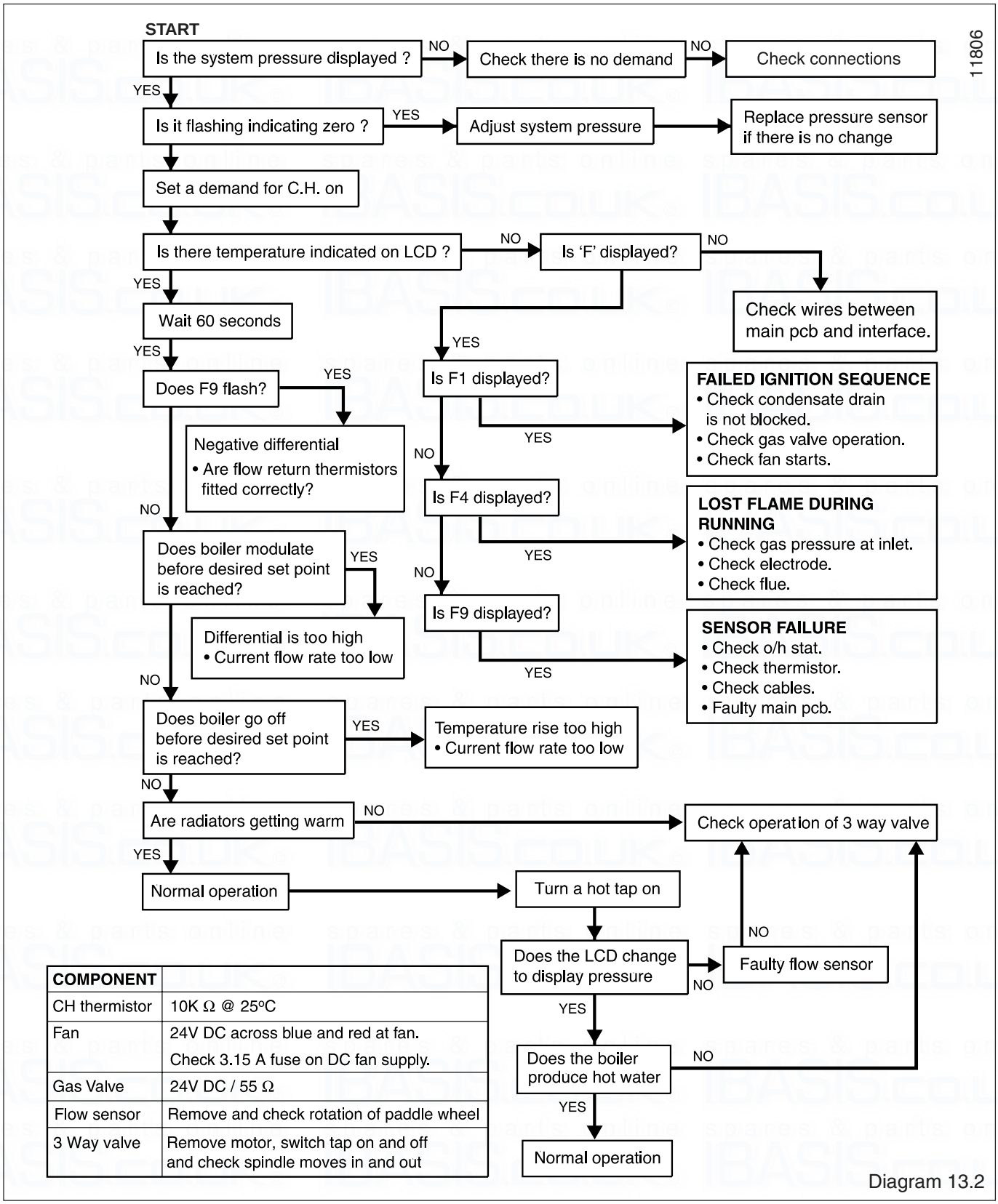

COMPONENT	
CH thermistor	10K Ω @ 25°C
Fan	24V DC across blue and red at fan. Check 3.15 A fuse on DC fan supply.
Gas Valve	24V DC / 55 Ω
Flow sensor	Remove and check rotation of paddle wheel
3 Way valve	Remove motor, switch tap on and off and check spindle moves in and out

Diagram 13.2

14 Replacement of Parts

14.1 General

Replacement of parts must be carried out by a competent person.

Before replacing any parts the boiler should be isolated from the mains electric supply and the gas should be turned off at the service cock on the boiler, see diagram 8.1.

Unless stated otherwise parts are replaced in the reverse order to removal.

After replacing any parts always test for gas soundness and if necessary carry out functional test of the controls.

For replacement of parts the front casing and the inner casing panel of the boiler will need to be removed. To remove undo the two screws on the underside of the front casing and lift off. Undo the two screws on the front of the inner front panel and lift off.

The side panels can be hinged sideways to aid replacement of parts.

To hinge a side panel undo and remove the three screws securing each side panel to the boiler, two at the front and one at the top.

14.2 Spark Electrode

For access, refer to section 14.1.

Remove the spark plug lead, earth lead and two securing screws. Withdraw the spark electrode carefully from the combustion chamber, see diagram 12.2.

14.3 Igniter Unit

For access, refer to section 14.1.

Remove ignition lead and electrical connections then remove igniter unit by removing two securing screws, see diagram 14.1.

14.4 Ignition Lead

For access, refer to section 14.1.

Refer to diagram 12.5.

Pull the spark plug style connector off the spark electrode and the spade connector connected to the igniter unit, see diagram 14.1.

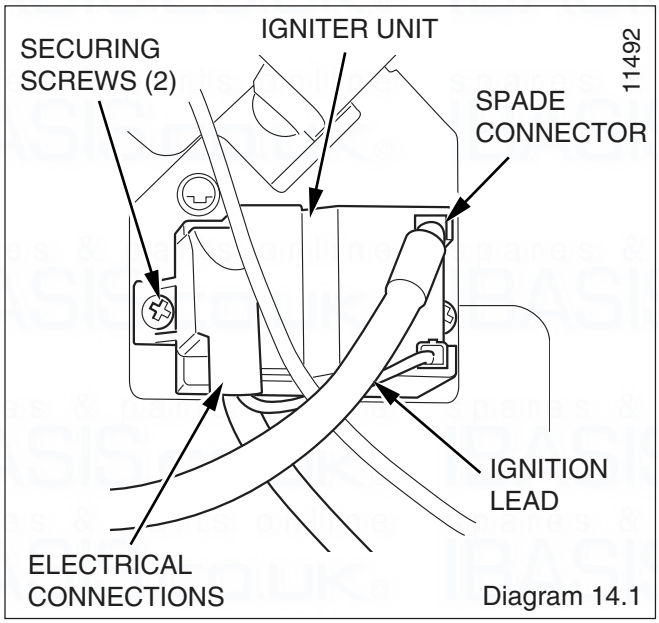

Diagram 14.1

14.5 DC Fan supply

For access, refer to section 14.1.

Refer to diagram 14.2.

Unplug white plastic plug from the DC fan supply.

Drop down control panel to the service position, see diagram 12.13.

Undo the three screws securing rear cover and lift off.

Unplug DC fan supply lead from main PCB, see diagram 14.3.

Release cable grip located on boiler case.

Remove DC fan supply cable from retaining clip located to the right of cable grip.

Undo the two screws securing DC fan supply.

Hinge right hand side panel, refer to relevant part of section 14.1.

Remove DC fan supply and lead.

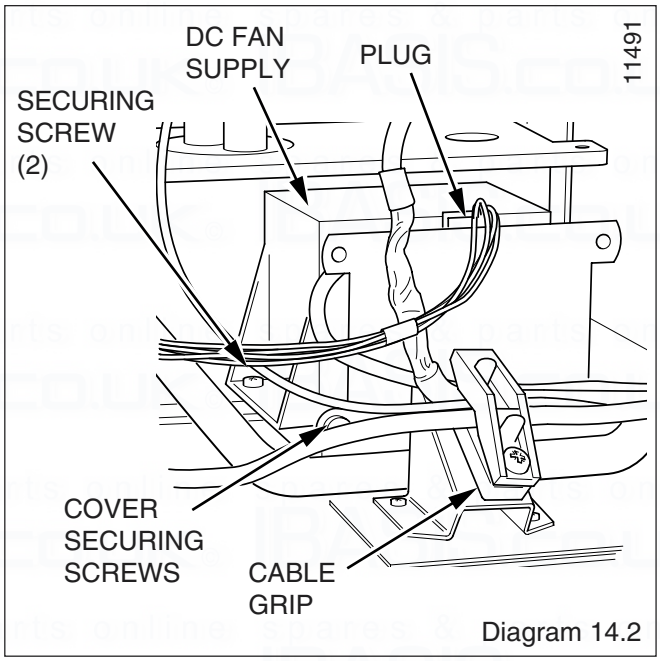

Diagram 14.2

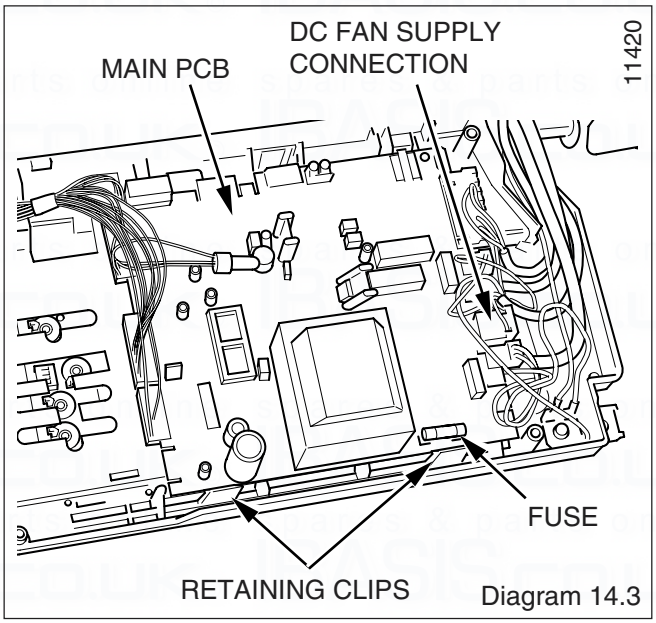

Diagram 14.3

14.6 Gas Control Valve

For access, refer to section 14.1.

Remove the electrical plug from the gas control valve, see diagram 14.4.

Refer to section 12.3 for removal of the fan, gas valve and burner assembly.

Before removing the gas valve note its position on the fan.

Remove the three securing screws, which fix the gas valve and plastic swirl plate to the venturi on the fan, see diagram 14.5.

Remove the gas valve.

When refitting the gas valve take care as it can be fitted more than one way.

After assembly test for gas soundness and purge in accordance with the current issue of BS6891or in IE, the current edition of I.S.813 "Domestic Gas Installations".

14.7 Fan

For access, refer to section 14.1.

Refer to section 12.3 for removal of the fan, gas valve and burner assembly.

Remove the gas control valve as described in the relevant parts of section 14.6.

Remove the venturi plate secured with three screws, see diagram 14.5.

Remove the two screws securing the fan to the gas manifold, see diagram 14.6, check the gasket and replace if necessary.

NOTE : The Cb fan is secured through an extension piece with two securing screws, check and replace any seals or gaskets if necessary.

14.8 Burner

For access, refer to section 14.1.

Refer to section 12.3 for removal of the fan, gas valve and burner assembly.

Remove the four screws that secure the burner, see diagram 14.7.

NOTE: THE BURNER WILL REQUIRE A NEW GASKET WHEN REFITTED.

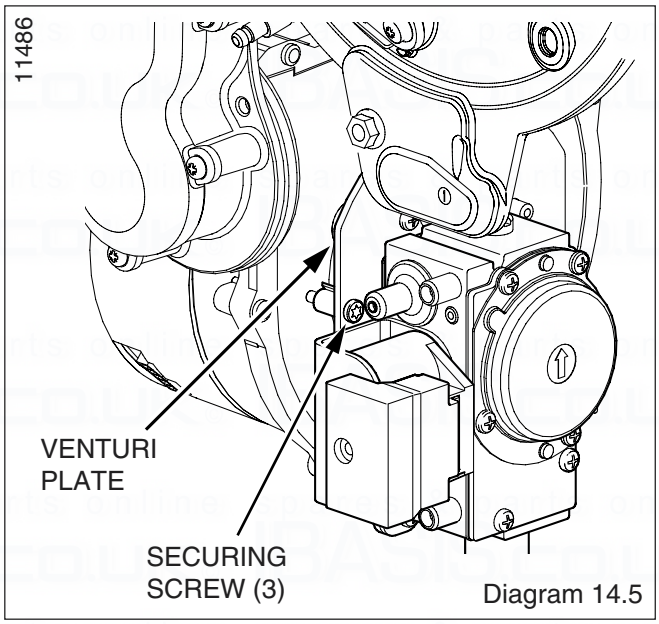

Diagram 14.5

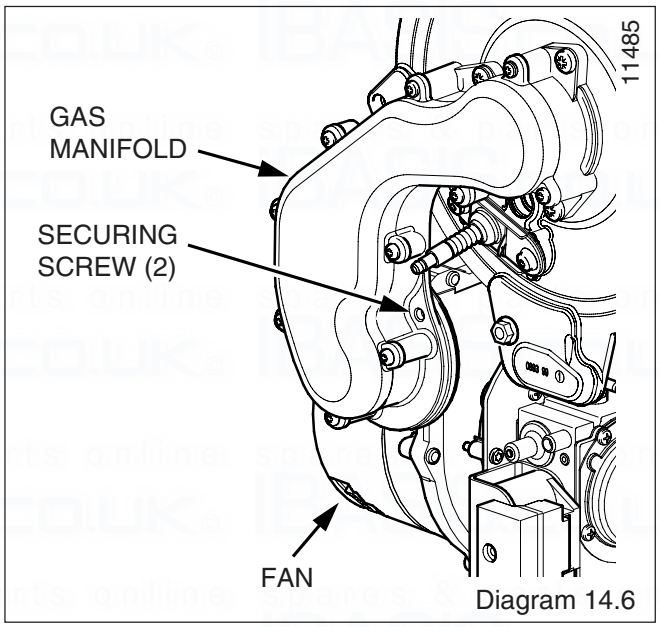

Diagram 14.6

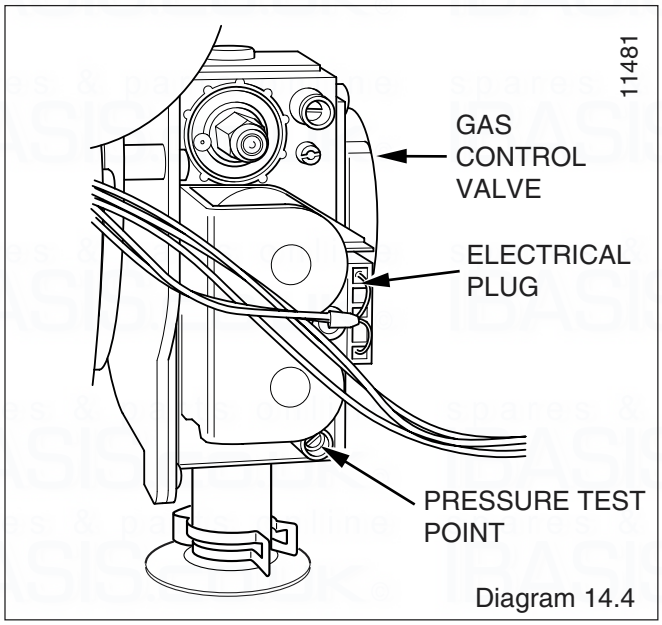

Diagram 14.4

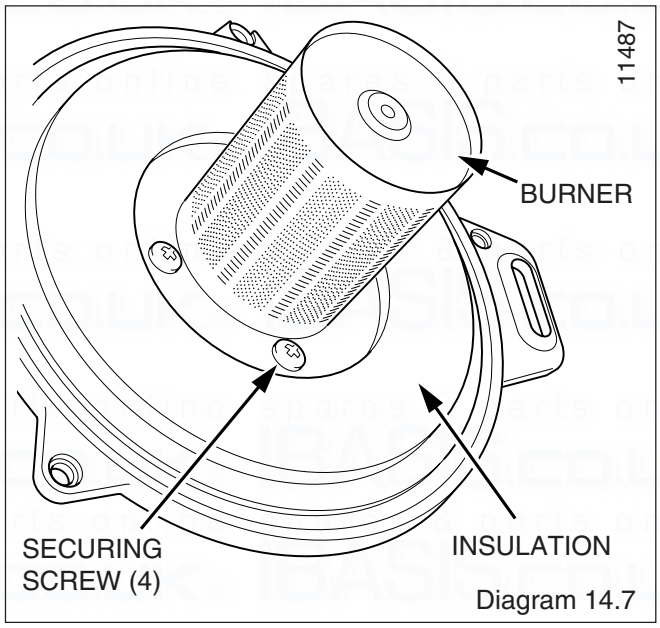

Diagram 14.7

14.9 Front Insulation

For access, refer to section 14.1.

Refer to section 12.3 for removal of the fan, gas valve and burner assembly.

Remove burner as per section 14.8.

Remove spark electrode, see section 14.2.

NOTE: THE BURNER WILL REQUIRE A NEW GASKET WHEN REFITTED.

14.10 Rear Insulation

For access, refer to section 14.1.

Refer to section 12.3 for removal of the fan, gas valve and burner assembly.

Remove securing screw and washer in the centre of the insulation and withdraw insulation, see diagram 14.8.

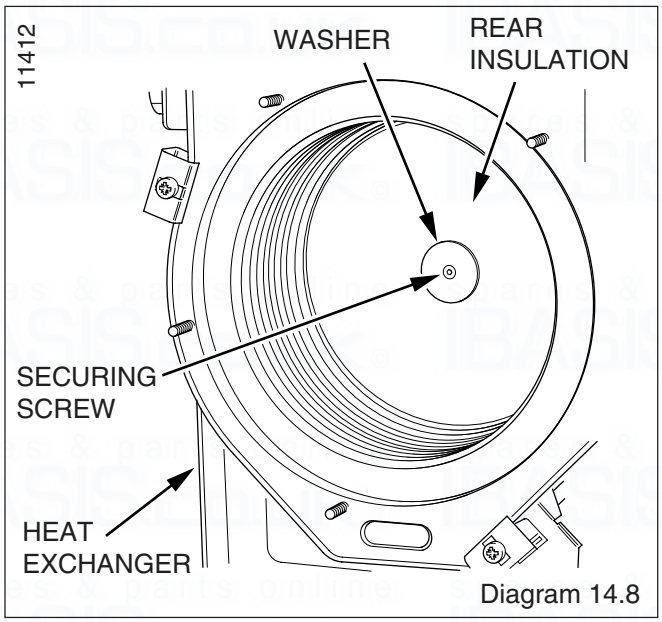

Diagram 14.8

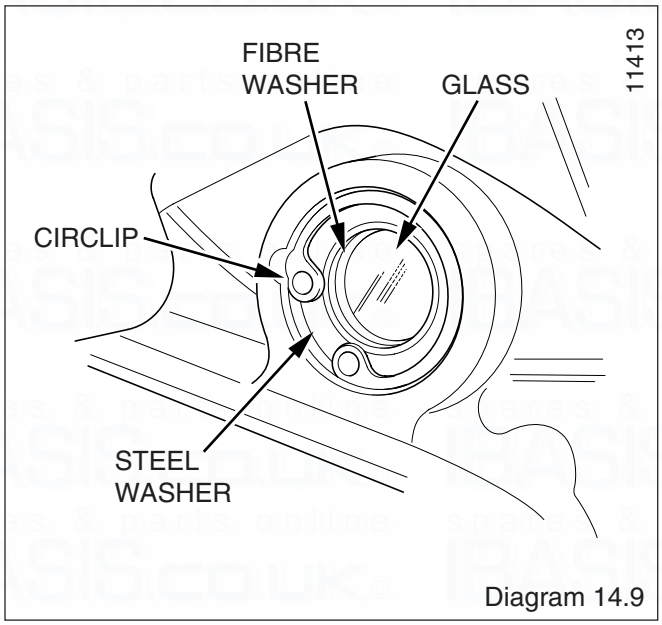

Diagram 14.9

14.11 Viewing Window

For access, refer to section 14.1.

Refer to diagram 14.9.

Remove circlip.

Remove steel washer.

Remove glass.

Remove fibre washer.

Replace in reverse order.

14.12 Expansion Vessel

For access, refer to section 14.1.

Refer to section 12.9 and drain the boiler heating circuit.

Undo the coupling at the base of the vessel, see diagram 14.10.

While holding the vessel remove the securing bolt on the top panel of the boiler. Remove upper support bracket.

Lift the vessel up, draw bottom out to the left, lower and remove.

Fit the replacement unit.

Fit a new gasket between the expansion vessel and coupling.

Refill, vent and pressurise the boiler.

Check for leaks.

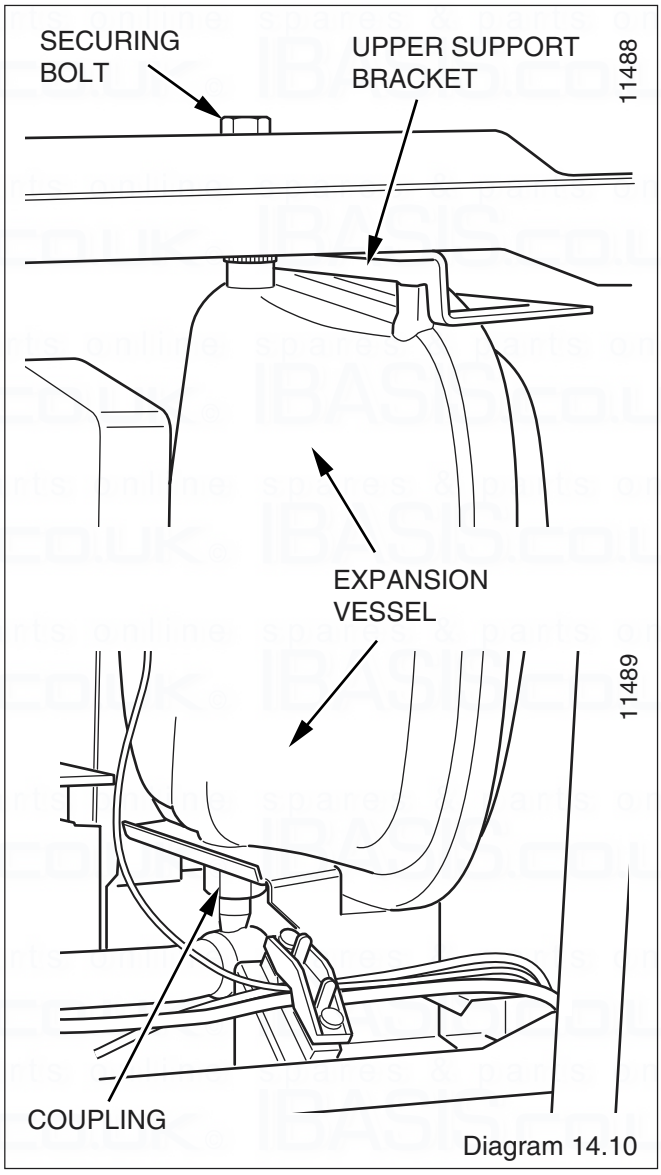

Diagram 14.10

14.13 Heat Exchanger

For access, refer to section 14.1.

Refer to section 12.3 for removal of the fan, gas valve and burner assembly.

Drain the boiler heating circuit, see section 12.9.

Drain the boiler hot water circuit, see section 12.10.

Remove the clip securing the clear condense pipe to heat exchanger.

Pull to remove the clear condense pipe out of the bottom of the heat exchanger.

Undo the two nuts of the flow and return pipes from the heat exchanger.

Move the pipes away from the heat exchanger.

Loosen the three heat exchanger securing screws and clamps (two at the top and one at the bottom) to remove the heat exchanger, see diagram 14.11.

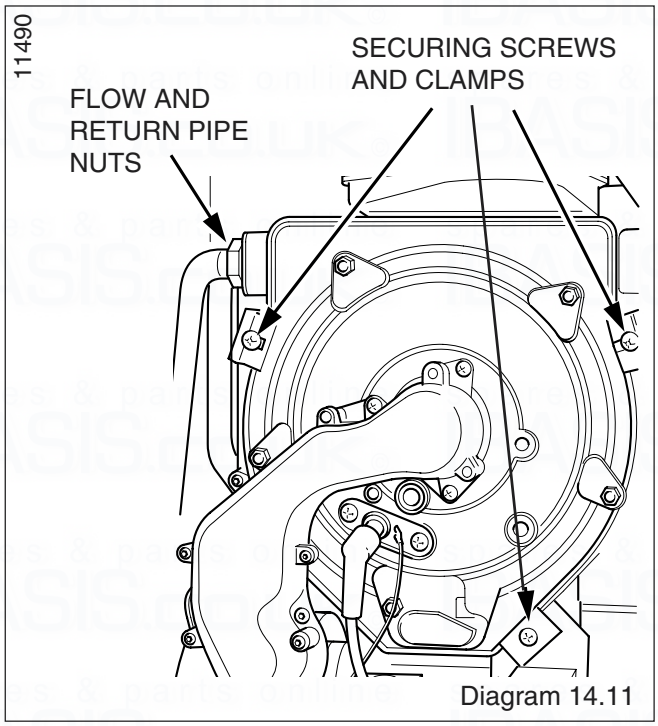

Diagram 14.11

CAUTION: There will be water in the heat exchanger.

Remove condense pipe connector from bottom of heat exchanger.

Carefully ease heat exchanger out.

14.14 Flue Hood

For access, refer to section 14.1.

Remove heat exchanger as per section 14.13.

Remove the two securing screws and pull the hood down and away from the flue hood bracket and flue elbow, see diagram 14.12.

14.15 Diverter Switch

For access, refer to section 14.1.

Refer to diagram 14.13.

Remove the electrical plug.

Remove the retaining clip.

Ease the diverter switch from its housing and remove.

14.16 Pump (head only)

For access, refer to section 14.1.

Refer to section 12.9 and drain the boiler heating circuit.

Refer to diagram 14.14.

Remove the four cap head screws.

Carefully remove the pump head together with cable. Do not strain cable.

Support the pump head, unscrew cable cover at the side of pump head and take off.

Disconnect wiring from pump head.

Reconnect wiring to new pump head and fit cover.

Fit the new pump head with ‘o’ ring.

Refill, vent and pressurise the boiler.

Check for leaks.

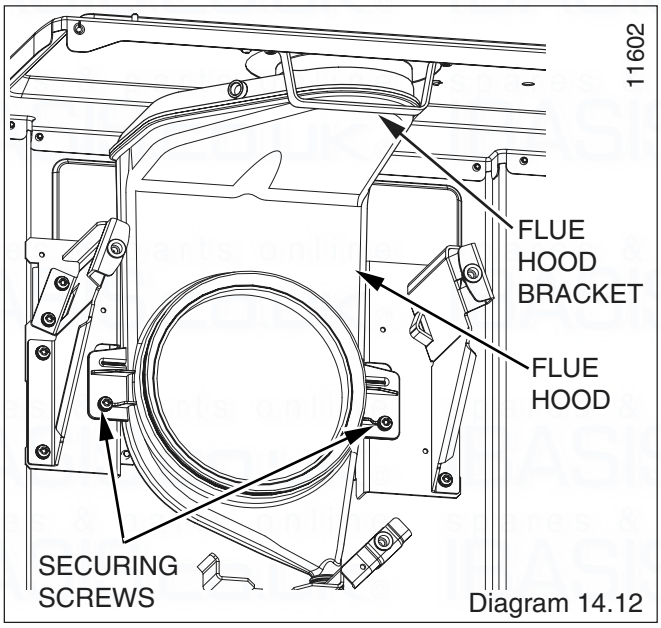

Diagram 14.12

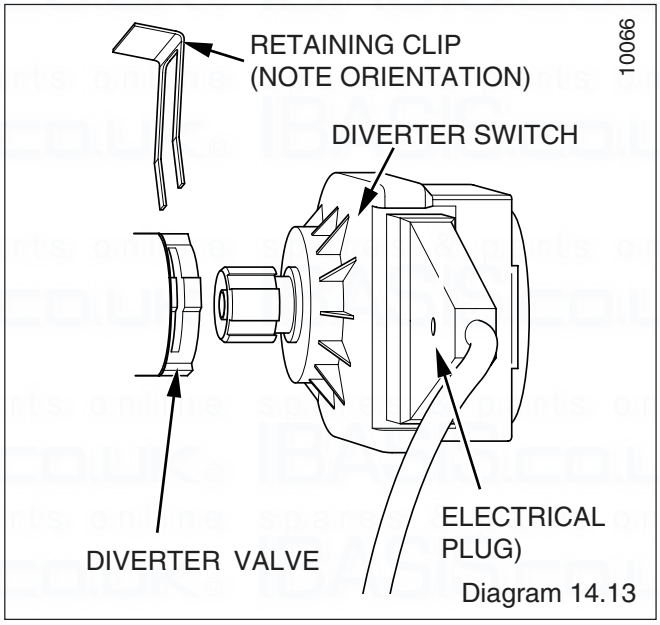

Diagram 14.13

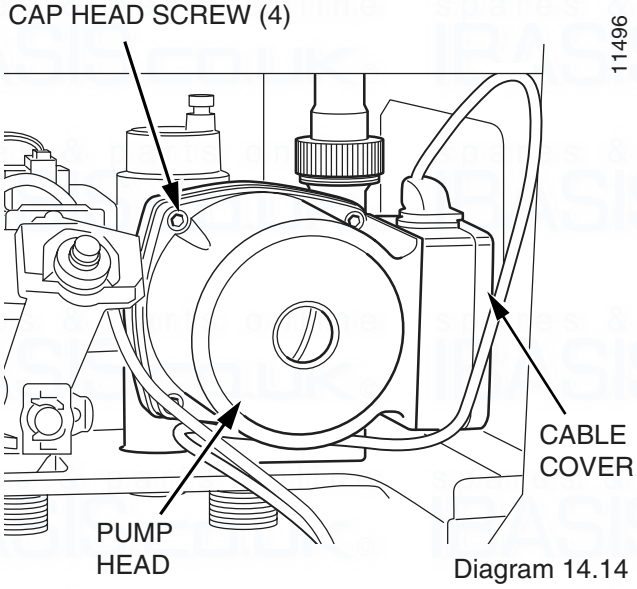

Diagram 14.14

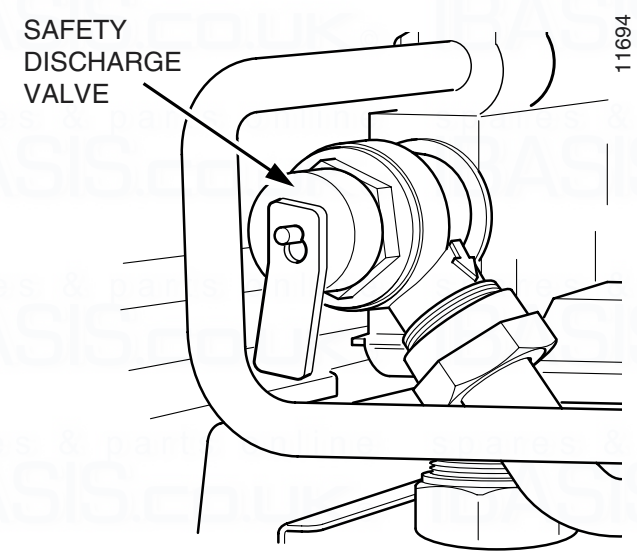

Diagram 14.15

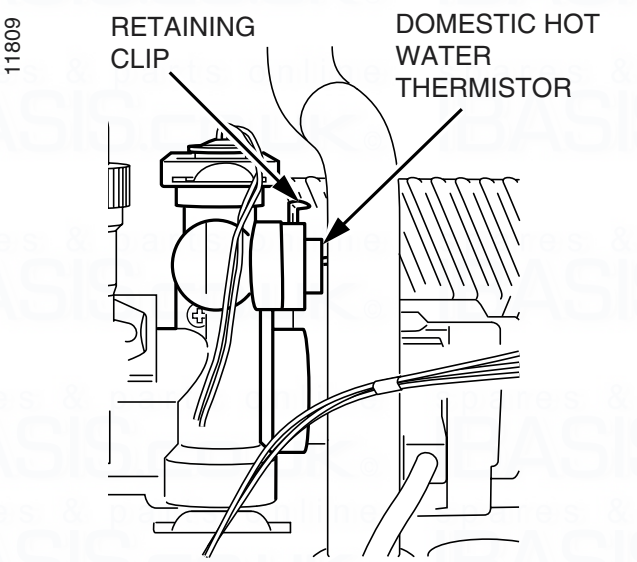

Diagram 14.16

14.17 Safety Discharge Valve

For access, refer to section 14.1.

Refer to section 12.9 and drain the boiler heating circuit.

Refer to diagram 14.15.

Undo the safety discharge valve union and remove from the pipework.

Remove the securing clip and withdraw the safety discharge valve.

Fit new 'O' ring.

Refill, vent and pressurise the boiler.

Check for leaks.

14.18 Domestic Hot Water Thermistor

For access, refer to section 14.1.

Refer to section 12.10 and drain the boiler domestic hot water circuit.

Refer to diagram 14.16.

Disconnect the domestic hot water thermistor electrical connections

Remove retaining clip.

Withdraw domestic hot water thermistor from its housing.

Note: When reconnecting electrical connections, polarity is not important.

Fit new 'O' ring.

Carry out a functional test of the controls.

14.19 Heating Flow Thermistor

For access, refer to section 14.1.

Refer to diagram 14.17.

Remove the electrical connections from the thermistor.

Remove the retaining clip from the flow pipe.

Remove the thermistor from the retaining clip.

Note: When reconnecting the polarity of the wiring to thermistors is unimportant.

14.20 Heating Return Thermistor

For access, refer to section 14.1.

Refer to diagram 14.17.

Remove the electrical connections from the thermistor.

Remove the retaining clip from the flow pipe.

Remove the thermistor from the retaining clip.

Note: When reconnecting the polarity of the wiring to thermistors is unimportant.

14.21 Overheat Thermostat

For access, refer to section 14.1.

Refer to diagram 14.17.

Remove the electrical connections from the overheat thermostat.

Remove the retaining clip from the flow pipe.

Remove the overheat thermostat from the retaining clip.

NOTE. When fitting new thermostat, please ensure that it is located correctly onto the flat area of the pipe and the retaining clip is secure.

14.22 Automatic Air Vent

For access, refer to section 14.1.

Refer to section 12.9 and drain the boiler heating circuit.

Refer to diagram 14.18.

Unscrew the automatic air vent.

Fit the new automatic air vent and 'O'ring ensuring the vent cap is left loose.

Refill, vent and pressurise the boiler.

Check for leaks.

14.23 Flow Sensor

For access, refer to section 14.1.

Refer to section 12.10 and drain the boiler hot water circuit.

Refer to diagram 14.19.

Undo the brass securing nut above the cold water inlet valve.

Remove the securing clip between the domestic water filter housing and the flow sensor, see diagram 14.19.

Disengage the domestic water filter housing by lifting it up and out.

Remove the electrical connection to the flow sensor.

Remove the securing clip between the flow sensor and the hydroblock.

Remove flow sensor.

Fit new 'O' rings.

After replacing the flow sensor, open the cold-water isolation valve and slowly open a hot water tap to remove air.

Close the hot water tap and check for any leaks.

14.24 Low Water Pressure Sensor

For access, refer to section 14.1.

Refer to section 12.9 and drain the boiler heating circuit.

Refer to diagram 14.20.

Disconnect the electrical lead by pushing up retaining tab to withdraw the lead plug.

Remove the retaining clip to remove the low water pressure sensor.

Fit new 'O' ring.

Fit the new low water pressure sensor. Refill vent and pressurise the boiler.

Check for leaks.

14.25 Bypass Tube

For access, refer to section 14.1.

Refer to section 12.9 and drain the boiler heating circuit.

Refer to diagram 14.21.

Remove the retaining clips to remove the bypass tube.

Fit new 'O' rings.

Replace the bypass tube, refill, vent and pressurise the boiler.

Check for leaks.

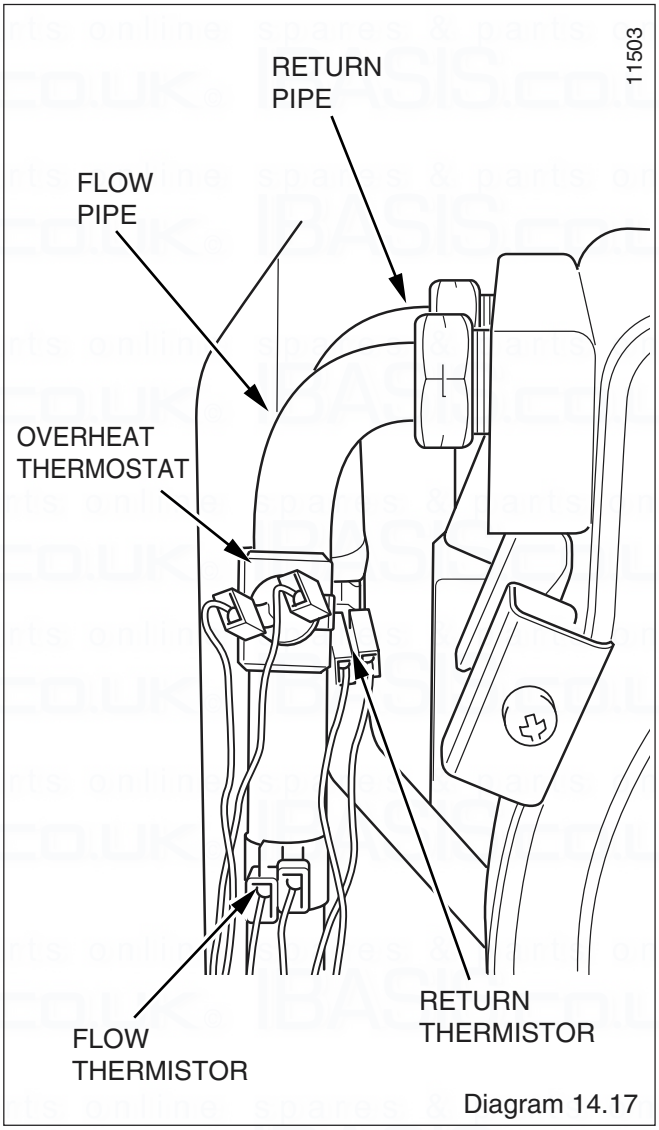

Diagram 14.17

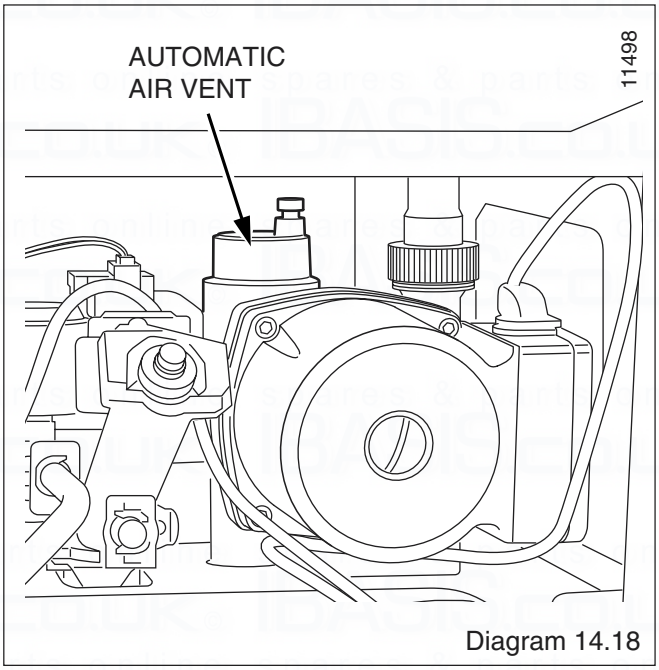

Diagram 14.18

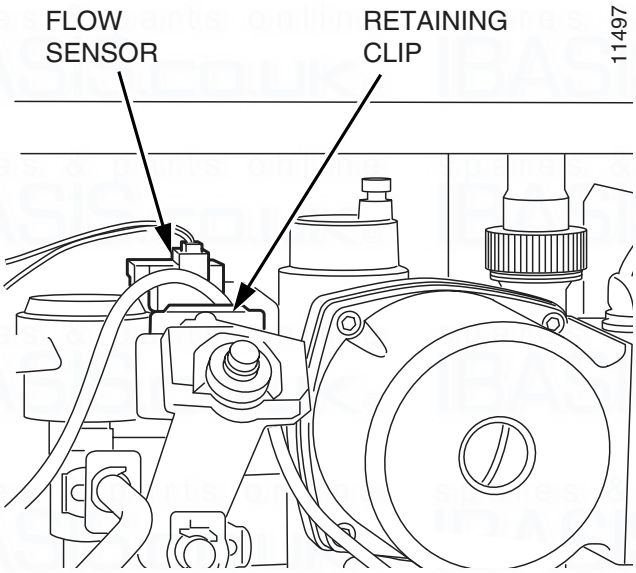

Diagram 14.19

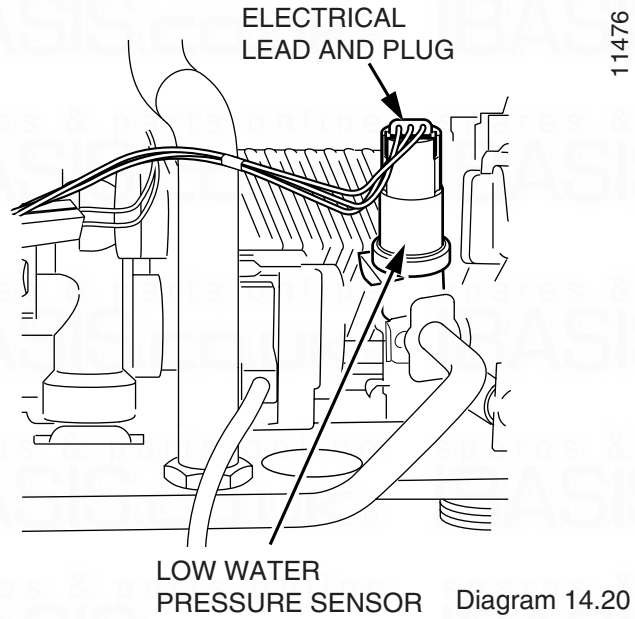

Diagram 14.20

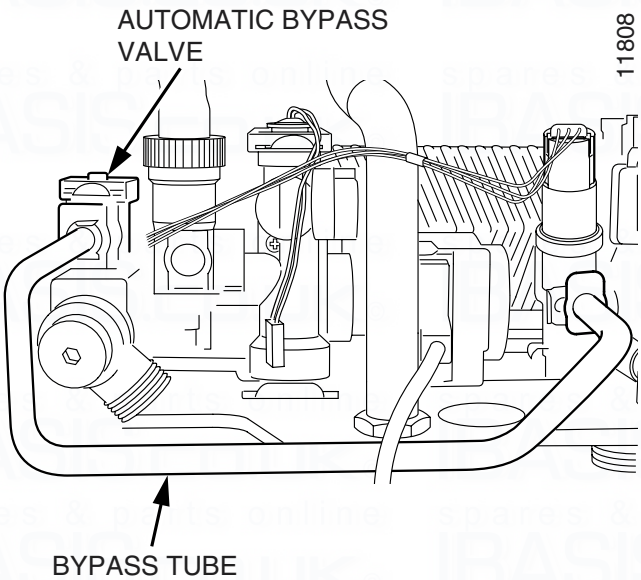

Diagram 14.21

14.26 Automatic Bypass Valve

For access, refer to section 14.1.

Refer to section 12.9 and drain the boiler heating circuit.

Refer to diagram 14.21.

Remove the retaining clip to remove the bypass valve.

Fit new ‘O’ rings.

Replace the bypass valve, refill, vent and pressurise the boiler.

Adjust the bypass as described in commissioning, see section 11.6.

Check for leaks.

14.27 Domestic Cold Water Inlet Filter

For access, refer to section 14.1.

Refer to section 12.7.

Fit new ‘O’ rings.

14.28 Central Heating Filter

Refer to section 12.8.

Fit new ‘O’ rings.

14.29 Heating Circuit Drain Point

Refer to section 12.9 to drain the boiler heating circuit.

Refer to diagram 14.22.

Remove the retaining clip to remove the drain point.

Fit new 'O' rings.

Replace the drain point, refill, vent and pressurise the boiler.

Check for leaks.

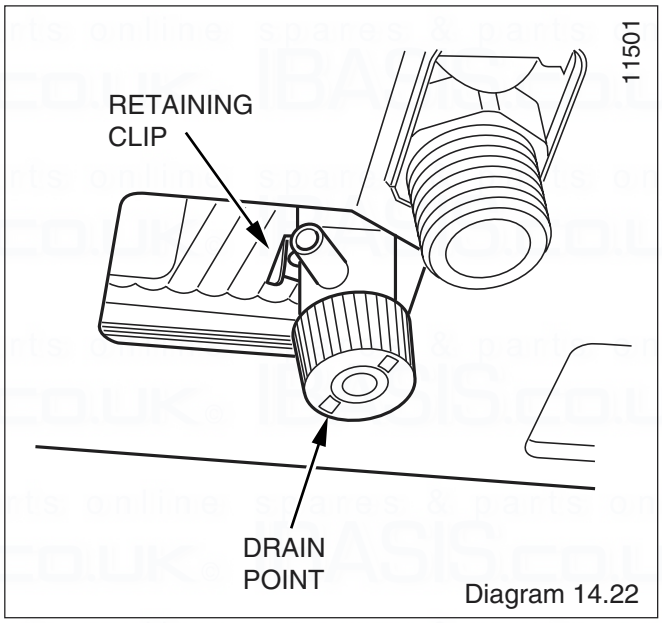

Diagram 14.22

14.30 Inner Casing Panel Seal

For access, refer to section 14.1.

Refer to diagram 14.23.

Remove the inner casing panel.

To replace remove the old seal, thoroughly clean the casing surfaces. Fit the new seal, it is supplied to the correct length.

Refit the inner casing panel.

NOTE: Ensure the seal is fitted correctly giving an airtight joint.

14.31 Condense Drain

For access, refer to section 14.1.

Refer to section 12.5.

14.32 Plate-to-Plate Heat Exchanger

For access, refer to section 14.1.

Refer to section 12.9 to drain the boiler heating circuit.

Refer to section 12.10 and drain the boiler hot water circuit.

Refer to diagram 14.24.

Remove the gas supply pipe from the gas cock and the gas valve, refer to relevant parts of section 12.3.

Undo the central heating flow pipe connection into the left hand hydroblock, see diagram 14.24.

Undo the nut connecting flow pipe to heat exchanger.

Lift it up to remove it from the hydroblock with the washer and rotate it forward and out of the way.

Using a TORX screwdriver remove the two screws securing the plate-to-plate heat exchanger to the hydroblock.

Remove the plate-to-plate heat exchanger by lifting it up and over the top of the left hand hydroblock.

When replacing the plate-to-plate heat exchanger ensure that the four rubber sealing washers are fitted into the hydroblock.

NOTE: The plate-to-plate heat exchanger only fits one way round, 'TOP' is marked on the plate.

Refill, vent and pressurise the boiler.

Open the cold-water isolation valve and slowly open a hot water tap to remove air.

Close the hot water tap and check for any leaks.

Open the heating circuit isolation valves, re-pressurise the system as necessary.

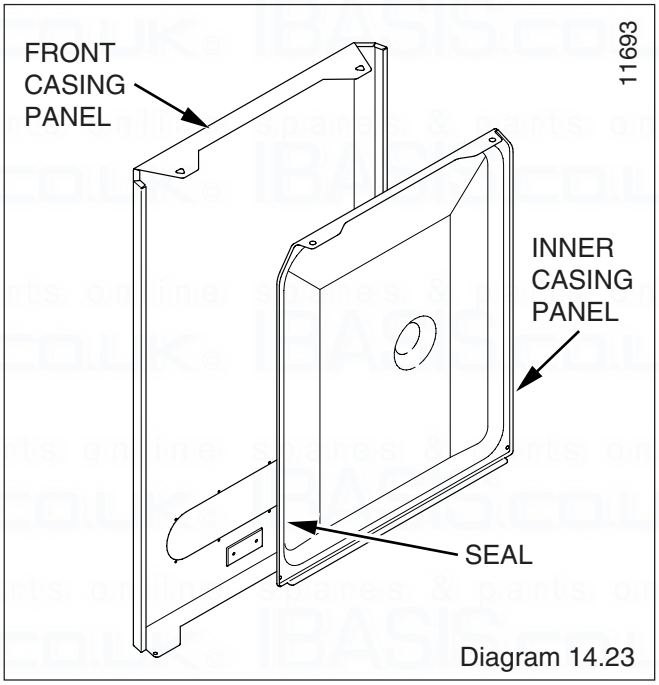

Diagram 14.23

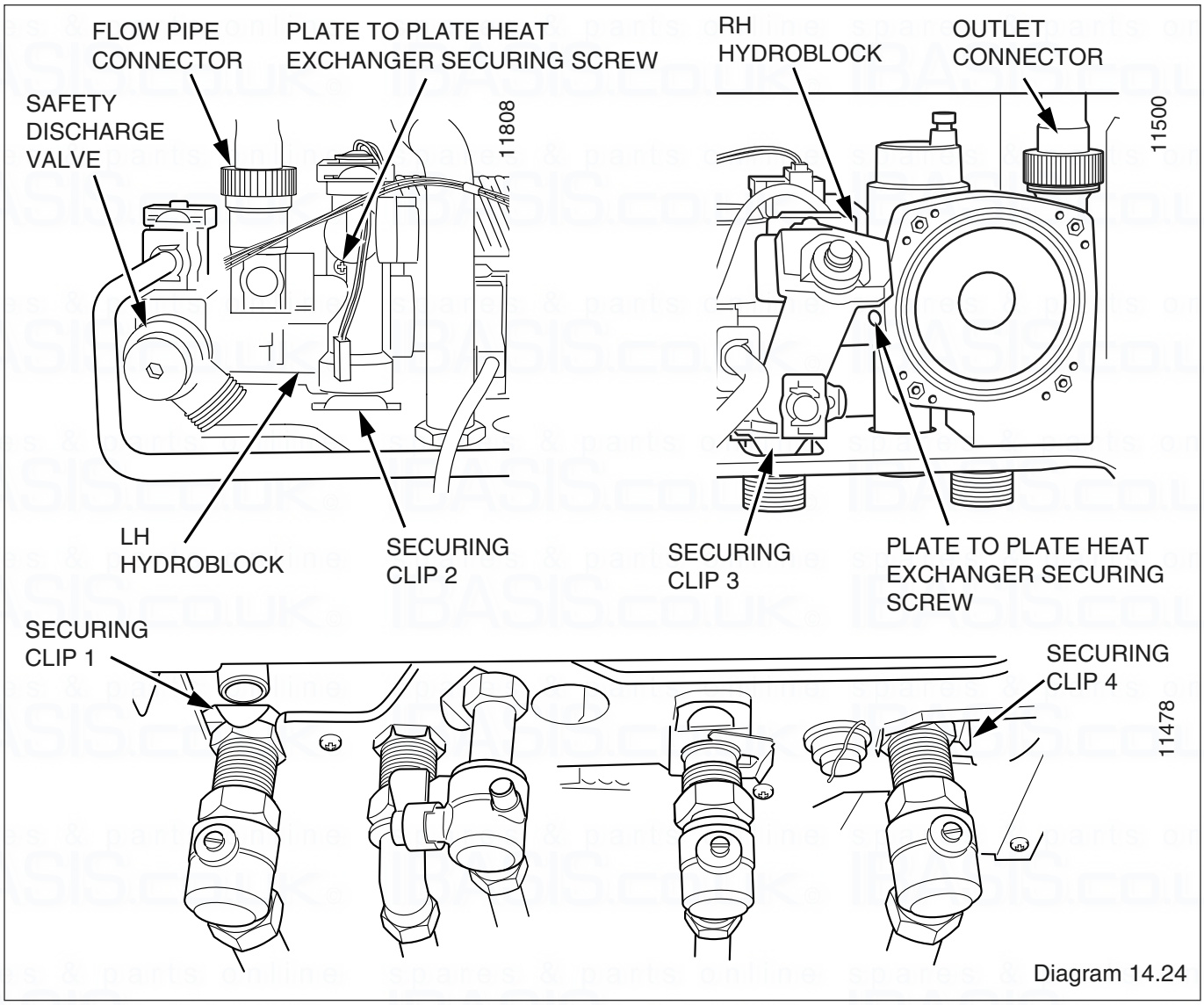

Diagram 14.24

14.33 Hydroblock Assembly Left-Hand

Refer to section 12.9 to drain the boiler heating circuit.

Refer to section 12.10 and drain the boiler hot water circuit.

Refer to diagram 14.24.

Undo the connector on the bottom of the flow pipe from the hydroblock.

Undo the nut connecting flow pipe to heat exchanger.

Lift the flow pipe up out of the way.

Remove the bypass tube, refer to section 14.25.

Undo the safety discharge valve union and remove the pipework.

Remove the securing clip and withdraw the safety discharge valve, refer to section 14.17.

Remove securing clips 1 and 2 below hydroblock, see diagram 14.24.

Undo three securing screws on the underside of the left-hand hydroblock.

Remove the diverter switch as described in section 14.15.

Remove left hand hydroblock from plate-to-plate heat exchanger using a TORX screwdriver to remove the securing screw, see diagram 14.24.

Lift out the left hand hydroblock.

Remove the remaining components for refitting into the replacement left hand hydroblock.

Refill, vent and pressurise the boiler.

Open the cold water isolation valve and slowly open a hot water tap to remove air. Close the hot water tap.

Check for any leaks.

14.34 Diverter Valve

For access, refer to section 14.1.

Refer to section 12.9 and drain the boiler heating circuit.

Refer to section 12.10 and drain the boiler hot water circuit.

Remove the diverter switch as described in section 14.15.

Refer to section 14.33 to remove the left hand hydroblock.

Unscrew and remove both halves of the diverter valve from the left hand and right hand sides of the hydroblock, see diagram 14.25.

When replacing the two halves of the diverter valve it is important to ensure the spindle is located correctly. This can be observed with the left hand hydroblock removed.

14.35 Hydroblock Assembly Right-Hand

For access, refer to section 14.1.

Refer to section 12.9 to drain the boiler heating circuit.

Refer to section 12.10 and drain the boiler hot water circuit.

Refer to diagram 14.24.

Undo the connector on the bottom of the return pipe from the hydroblock.

Undo the nut connecting return pipe to heat exchanger.

Lift the return pipe up out of the way.

Undo the coupling at the base of the expansion vessel, see diagram 14.10.

Remove the clip holding the expansion vessel coupling into the top of the right hand hydroblock.

Move the coupling out of the way.

Remove pump head, refer to section 14.16.

Note: It is not necessary to disconnect the electrical lead but put pump head in a convenient place where it will not strain the lead.

Remove the bypass tube, refer to section 14.25.

Remove the electrical connections to the flow sensor and the low water pressure sensor, refer to sections 14.23 and 14.24.

Remove the water connection clips 3 and 4 below the hydroblock, see diagram 14.24.

Remove the central heating filter, refer to section 12.8.

Remove the retaining clip to remove the drain point, refer to section 14.29.

Undo two securing screws on underside of the right hand hydroblock.

Remove right hand hydroblock from plate-to-plate heat exchanger using a TORX screwdriver to remove the securing screw, see diagram 14.24.

Lift out the right hand hydroblock.

Remove the remaining components for refitting into the replacement right hand hydroblock.

Refill, vent and pressurise the boiler.

Open the cold-water isolation valve and slowly open a hot water tap to remove air. Close the hot water tap.

Check for leaks.

14.36 Access to Switches, User Interface and Timer

For access, refer to section 14.1.

Release the front of the fascia by carefully prising up the two retaining latches, see diagram 14.26.

Do not allow the front of the fascia to swing down and be loosely held by the electrical connections to the mains/reset switch, user interface and clock. Either remove the connections or support the fascia.

14.37 Clock/Timer (if fitted)

Refer to section 14.36 for access.

Remove electrical plug.

Undo two securing screws and withdraw clock/timer.

14.38 Mains/Reset Switch

Refer to section 14.36 for access.

Remove the switch retaining screw.

Remove switch from housing, see diagram 14.27.

Remove electrical leads.

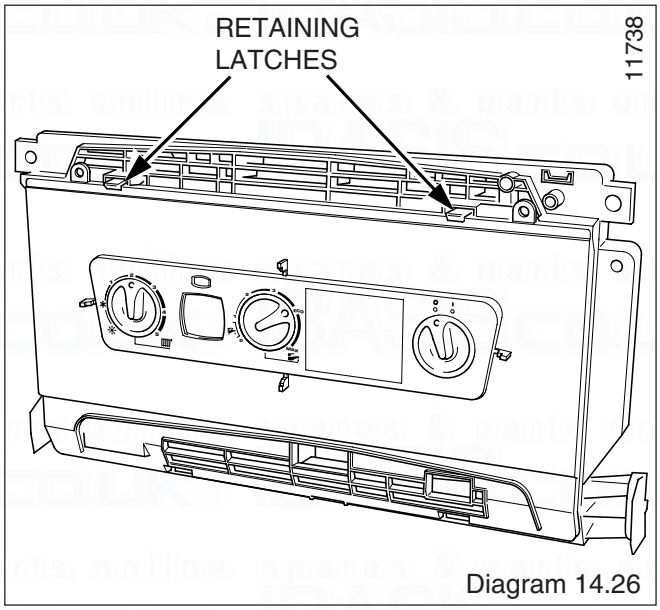

Diagram 14.26

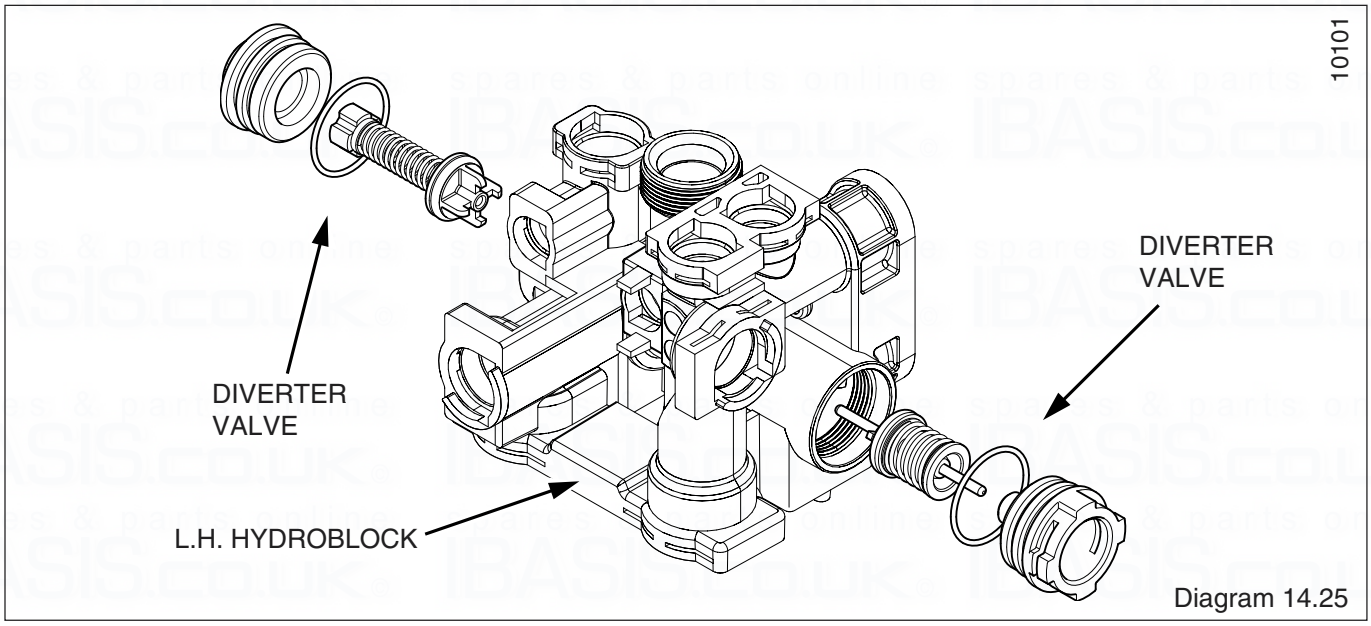

Diagram 14.25

14.39 Mains/Reset Knob

Refer to section 14.36 for access.

Remove actuator by springing back retaining clips, see diagram 14.27.

Spring back knob retaining clips and push knob out from the back.

14.40 User Interface/Display Unit PCB

Refer to section 14.36 for access.

Remove electrical plug.

Remove the three securing screws.

Withdraw the board, see diagram 14.29.

When replacing the board refer to instructions supplied with replacement PCB on setting it up.

14.41 Control Box PCB

For access, refer to section 14.1.

Hinge down the control box.

Remove TORX screws and unhook the rear panel.

Remove the electrical connections to the PCB.

Prise back the two PCB retaining clips and withdraw the PCB, see diagram 14.28.

When refitting the rear panel ensure the leads are not trapped, refer to diagram 14.3.

14.42 Control Box

For access, refer to section 14.42.

Remove relevant plugs and connectors, refer to wiring diagram 13.1.

Withdraw grommets and leads so they are hanging loose.

Unthread the retaining cord and remove the control box by drawing it outwards away from its retaining slots, see diagram 14.28.

14.43 Fuses

PCB - Control Box

For access, refer to section 14.41.

The fuse is located at bottom right hand side of the PCB, see diagram 14.3.

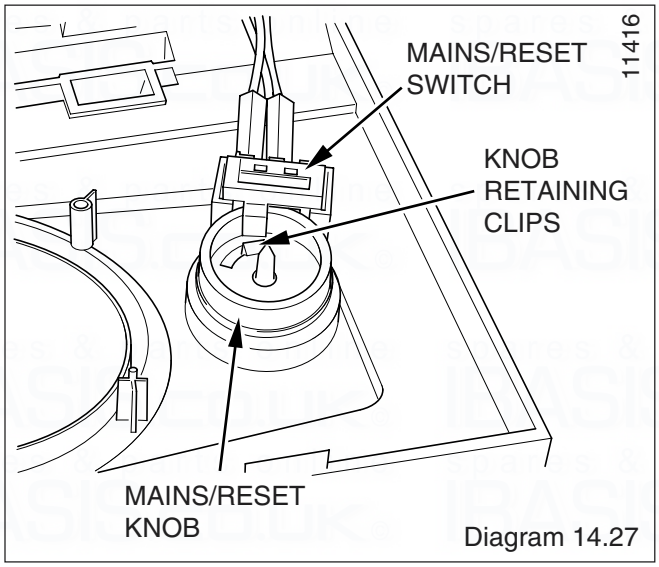

Diagram 14.27

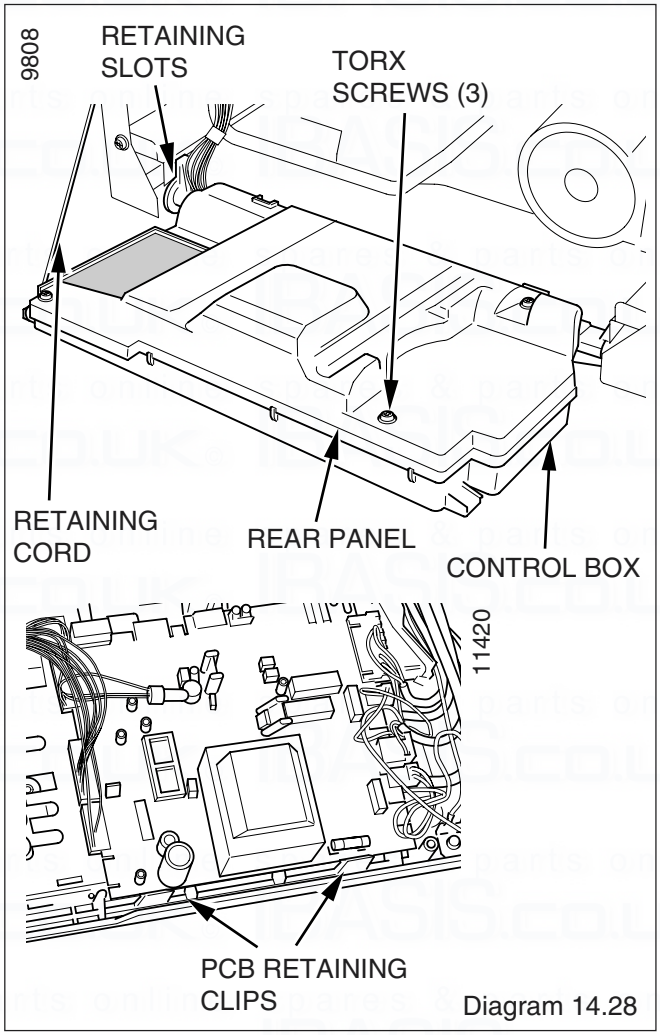

Diagram 14.28

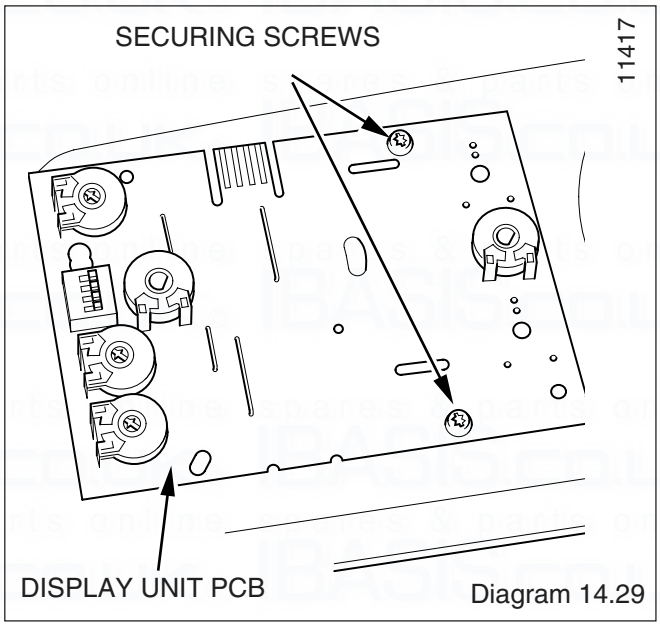

Diagram 14.29

14 Replacement of Parts

PCB - DC Fan Supply

For access, refer to section 14.1.

Refer to diagram 14.2 and wiring diagram 13.1.

Undo the two screws securing the front cover of the DC Fan Supply and remove.

The fuse is located near the centre of the PCB.

14.44 230V Controls Interface

For access, refer to section 14.36.

Disconnect the electrical connection from the 230V controls board and the electrical connection from the control box PCB.

Remove the 230V controls interface retaining screw.

Remove the 230V controls interface board, see diagram 14.30.

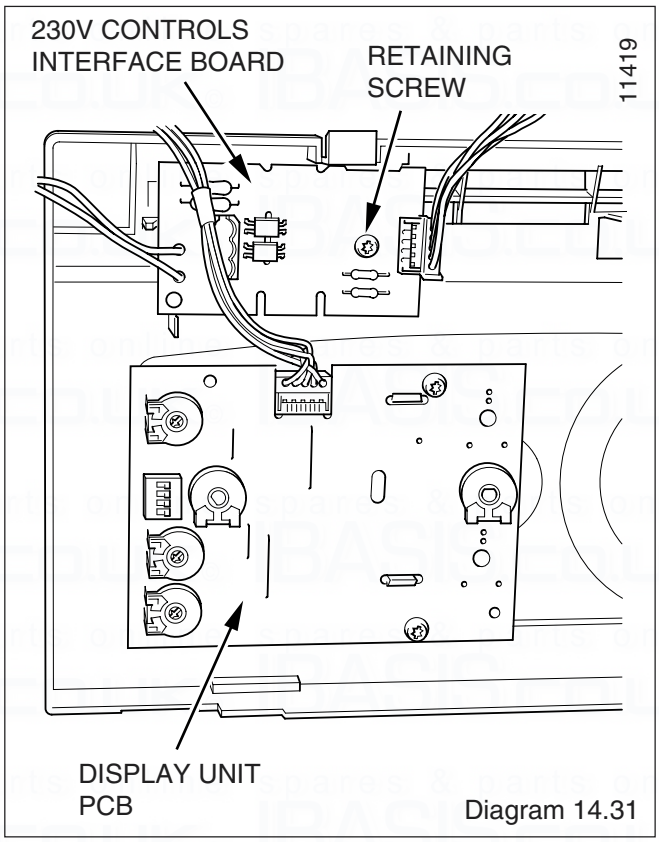

Diagram 14.31

15 Spare Parts

When ordering spare parts, contact Halstead Boilers using the telephone number on the front cover of this booklet.

Please quote the name of the appliance and serial number, to be found on the data label, see diagram 14.29.

If ordering from British Gas also quote the G.C. number of the part.

Key No.	Part No.	Description	GC Part No.
1	801721	DC Fan Supply	*
2	801724	Overheat Cutoff	*
3	801911	Pressure Sensor	*
4	801831	Plate to Plate Heat Exchanger	*
5	801192	Diverter switch	*
6	801637	Electrode	*
7	801904	Safety Discharge Valve	*
8	801898	Automatic Air Vent	*
9	801897	Central Heating Filter	*
10	801722	Heating flow thermistor /Heating return thermistor	*
11	801649	Gas control valve	*
13	*	Mains/Reset Switch	*
14	801910	Flow Sensor	*
15	801655	Igniter Unit	*
16	801909	By-pass	*
17	801923	230V Controls Interface	*
18	801719	Control Box P.C.B.	*
19	801380	Pump (head only)	*
20	801645	Fan	*
21	801727	Display Board	*
22	801632	Burner	*

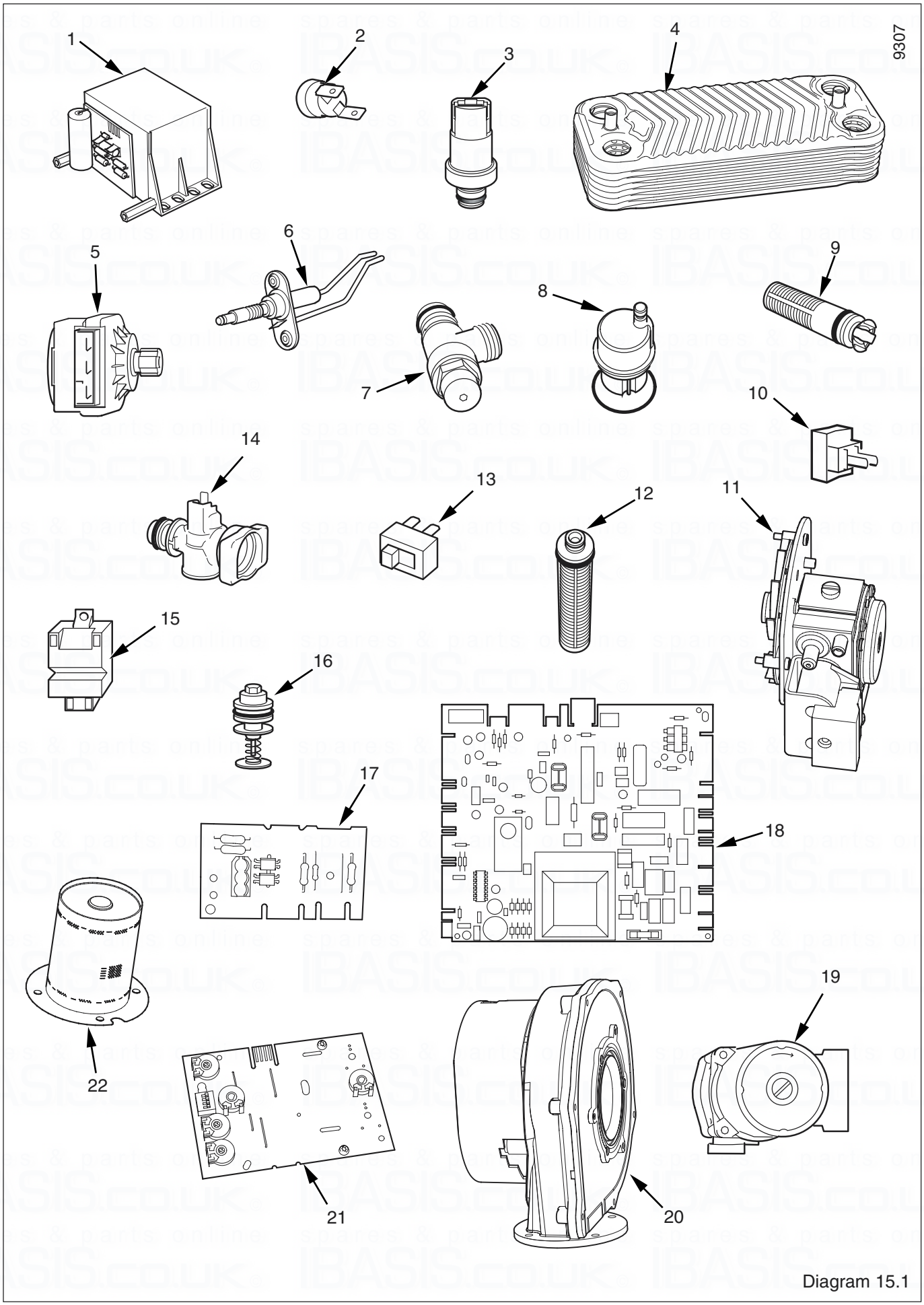

Diagram 15.1

Because of our constant endeavour for improvement, details may vary slightly from those shown in these instructions.