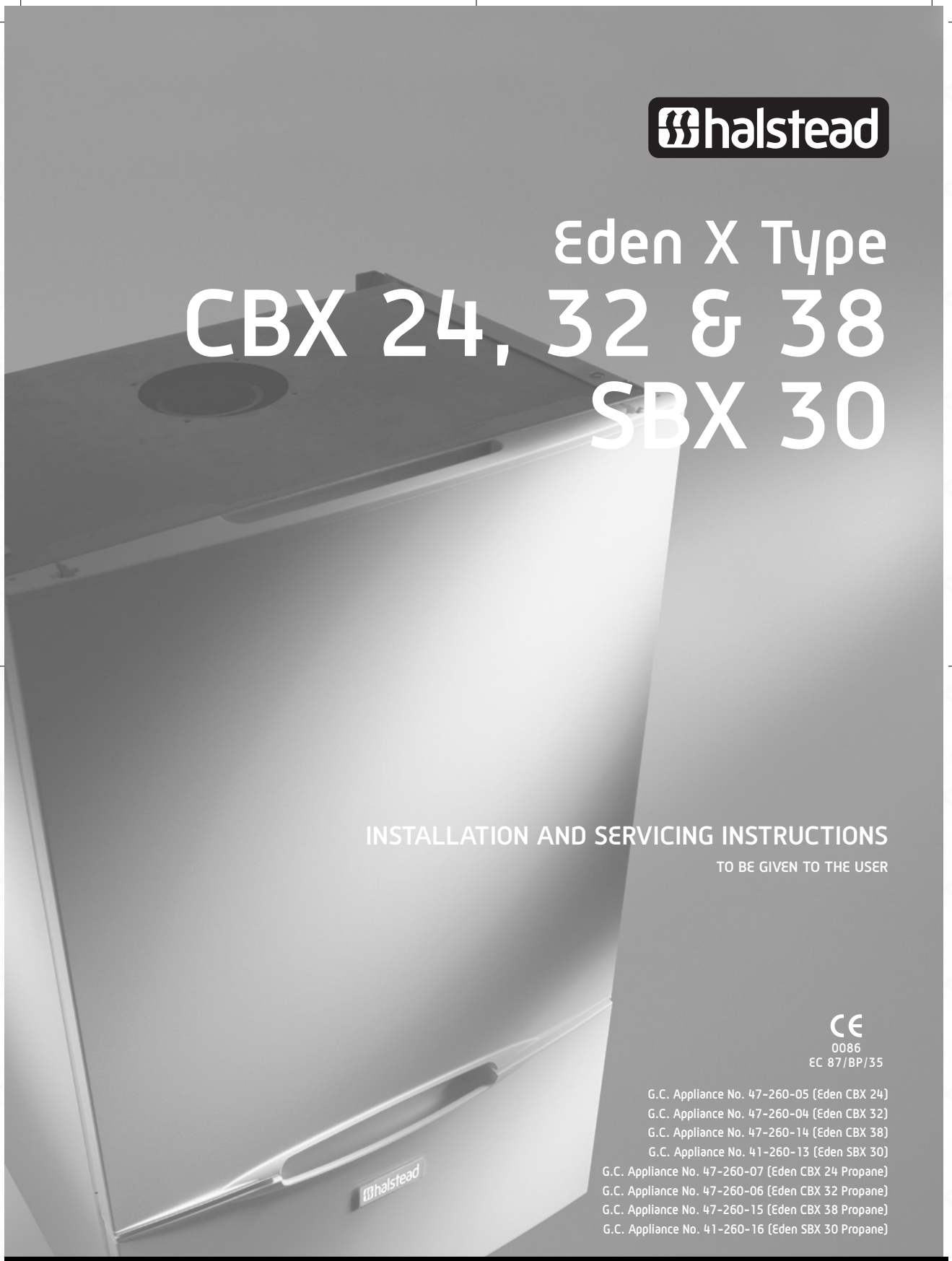

halstead

Eden X Type

CBX 24, 32 & 38
SBX 30

INSTALLATION AND SERVICING INSTRUCTIONS

TO BE GIVEN TO THE USER

CE
0086
EC 87/BP/35

G.C. Appliance No. 47-260-05 (Eden CBX 24)
G.C. Appliance No. 47-260-04 (Eden CBX 32)
G.C. Appliance No. 47-260-14 (Eden CBX 38)
G.C. Appliance No. 41-260-13 (Eden SBX 30)
G.C. Appliance No. 47-260-07 (Eden CBX 24 Propane)
G.C. Appliance No. 47-260-06 (Eden CBX 32 Propane)
G.C. Appliance No. 47-260-15 (Eden CBX 38 Propane)
G.C. Appliance No. 41-260-16 (Eden SBX 30 Propane)

COMBINATION AND SEALED SYSTEM CONDENSING BOILERS

CONTENTS

1	**Introduction**	**0**
1.1	Important Information	1
1.2	General Description	1
2	**Technical Specifications**	**2**
2.1	Gas Categories	2
2.2	Performance Data	2
2.3	General Specifications	3
2.4	Overall Dimensions & Minimum Clearances	4
2.5	Concentric Air / Flue Duct Specifications	4
2.6	Specification for Open Flued B33 Applications	7
2.7	Specification for Twin Flued (Type C53) Applications	7
2.8	Additional Concentric Flue Kits	9
2.9	Appliance Hydraulic Circuits	10
3	**Installation Requirements**	**12**
3.1	Statutory Requirements	12
3.2	Appliance Location	12
3.3	Flue Terminal Position	12
3.4	Ventilation Requirements	12
3.5	Condensate Disposal	13
3.6	Gas Supply	13
3.7	Central Heating systems	13
3.8	Domestic Hot Water System	14
3.9	Electricity Supply	16
3.10	External Controls	16
4	**Appliance Installation**	**17**
4.1	Unpacking The Appliance	17
4.2	Preparing The Wall	17
4.3	Mounting The Appliance	18
4.4	Central Heating & Domestic Hot Water Service Connections	18
4.5	Gas Connection	19
4.6	Condensate Connection	19
4.7	Pressure Relief Valve Connection	19
4.8	Air / Flue Duct Installation	19
4.9	Electrical Connections	20
4.10	Optional Cylinder/Tank Temperature Sensor (SBX Appliances Only)	20
5	**Commissioning**	**21**
5.1	Filling the Water System	21
5.2	Commissioning the Appliance	22
5.3	DHW Flow Rate (Cbx Appliances Only)	23
5.4	Final Checks	23
5.5	Location Indication	23
5.6	Frost Protection	23
5.7	Overheat Protection	23
5.8	Other Features	24
5.9	Users Instructions	24
5.10	Appliance Log Book	24
5.11	Gas Conversion	24
6	**Routine Servicing**	**25**
6.1	Combustion Check	25
6.2	Gas Control Valve, Fan & Burner Assembly	25
6.3	Burner	25
6.4	Ignition & Detection Electrodes	25
6.5	Combustion Chamber & Heat Exchanger	27
6.6	Condensate Drain	27
6.7	Domestic Cold Water Inlet Filter	27
6.8	Sealed Water System	28
6.9	Re-assembly & Re-commissioning	28
6.10	Final Checks	28
7	**Internal Wiring Diagrams**	**29**
7.1	Functional Flow Wiring Diagram	29
8	Fault Finding	30
8.1	General	30
8.2	Diagnostic LED Indicators	30
8.3	Faulting Finding Codes	30
8.4	Domestic Hot Water Fault Finding	30
8.5	Central Heating Fault Finding	30
9	**Replacement Of Parts**	**32**
9.1	Ignition and Detection Electrodes	32
9.2	Igniter Unit and Ignition Leads	32
9.3	Gas Control Valve including Air Inlet Cowl	33
9.4	Fan	34
9.5	Burner	35
9.6	Combustion Chamber Front Insulation	35
9.7	Combustion Chamber Rear Insulation	35
9.8	Heat Exchanger	35
9.9	Flue Hood	36
9.10	Pump (Head Only)	36
9.11	Diverter Valve Motorised Head	37
9.12	Hydroblock Assembly	37
9.13	Expansion Vessel	38
9.14	Pressure Relief Valve	38
9.15	Water Temperature Sensors	38
9.16	Flue Sensor	38
9.17	Plate Heat Exchanger and Filter (CBX Appliances Only)	39
9.18	Condensate Drain System	39
9.19	Pressure Gauge	39
9.20	Auto Air Vent	39
9.21	Control PCB	40
9.22	Time Clock (CBX Appliances Only)	40
9.23	DHW Flow Turbine, Flow Regulator and Filter (CBX Appliances Only)	40
9.24	Draining The Appliance	40
10	**Short Parts List**	**41**

1 INTRODUCTION

The Halstead, **Eden CBX**, and **Eden SBX** range are, high efficiency condensing, fully automatic, wall mounted gas appliances suitable for either room sealed or opened flued applications, for use with natural gas (G20), and LPG (G31). The **Eden CBX** combination appliances provide the user with both central heating (CH) and domestic hot water (DHW) on demand, with DHW pre-heat feature. The **Eden SBX** models are suitable for a sealed central heating system, with the facility to heat and control a hot water cylinder directly.

The appliances feature an attractive white stove enamelled casing, with inset control panels. The flue systems are in white stove enamel to give a clean attractive appearance to the installation.

A standard horizontal concentric air/flue duct terminal is available, (maximum duct length of 755 mm (29in)), suitable for room sealed applications. The duct assembly is connected to the appliance via a turret, which can be orientated to provide different horizontal duct directions. Extension ducts may be fitted in accordance with and up to the maximum dimensions stated in these instructions.

A vertical concentric outlet kit is also available for installations where an outside wall is not accessible or where it is desired to fit the duct 'through the roof'. Installation using the horizontal duct is described in the main text of these instructions and additional information is provided in the vertical outlet kit for the vertical installation option. (Note: If the vertical outlet kit is to be used, access to the roof is necessary).

Other flue kits are available for open flued (B23), split flued (C53), and special (C13) applications, contact Halstead Boilers Ltd Service Help Line: 0844 371 1111, for further details,

ONLY HALSTEAD APPROVED FLUE KITS OR EXTENSIONS MAY BE USED WITH THESE APPLIANCES.

SERVICE INTERVAL RECORD

It is recommended that your heating system is serviced regularly and that you complete the appropriate Service Interval Record below.

SERVICE PROVIDER Before completing the appropriate Service Interval Record below, please ensure you have carried out the service as described in the boiler manufacturer's instructions.

Always use the appliance manufacturer's specified spare part when replacing gas controls.

SERVICE 1 DATE:
ENGINEER NAME
COMPANY NAME
TEL No.
CORGI ID SERIAL No.
COMMENTS
SIGNATURE

SERVICE 2 DATE:
ENGINEER NAME
COMPANY NAME
TEL No.
CORGI ID SERIAL No.
COMMENTS
SIGNATURE

SERVICE 3 DATE:
ENGINEER NAME
COMPANY NAME
TEL No.
CORGI ID SERIAL No.
COMMENTS
SIGNATURE

SERVICE 4 DATE:
ENGINEER NAME
COMPANY NAME
TEL No.
CORGI ID SERIAL No.
COMMENTS
SIGNATURE

SERVICE 5 DATE:
ENGINEER NAME
COMPANY NAME
TEL No.
CORGI ID SERIAL No.
COMMENTS
SIGNATURE

SERVICE 6 DATE:
ENGINEER NAME
COMPANY NAME
TEL No.
CORGI ID SERIAL No.
COMMENTS
SIGNATURE

SERVICE 7 DATE:
ENGINEER NAME
COMPANY NAME
TEL No.
CORGI ID SERIAL No.
COMMENTS
SIGNATURE

SERVICE 8 DATE:
ENGINEER NAME
COMPANY NAME
TEL No.
CORGI ID SERIAL No.
COMMENTS
SIGNATURE

SERVICE 9 DATE:
ENGINEER NAME
COMPANY NAME
TEL No.
CORGI ID SERIAL No.
COMMENTS
SIGNATURE

SERVICE 10 DATE:
ENGINEER NAME
COMPANY NAME
TEL No.
CORGI ID SERIAL No.
COMMENTS
SIGNATURE

1.1 IMPORTANT INFORMATION

IT IS A STATUTORY REQUIREMENT THAT ALL GAS APPLIANCES ARE INSTALLED BY COMPETENT PERSONS, (i.e. CORGI REGISTERED INSTALLERS) IN ACCORDANCE WITH THE GAS SAFETY (INSTALLATION AND USE) REGULATIONS (CURRENT EDITION). FAILURE TO COMPLY WITH THESE REGULATIONS MAY LEAD TO PROSECUTION.

These appliances have been tested and certified in order to satisfy the necessary European Directives and comply with the latest Building Regulations, including the efficiency requirements of the SEDBUK scheme.

Gas Appliance Directive	90/396/EEC
Efficiency of Hot Water Boilers Directive	92/42/EEC
Low Voltage Directive	93/68/EEC
Electromagnetic Compatibility Directive	92/31/EEC

No modifications to these appliances should be made unless they are fully approved by the manufacturer.

Appliance installation must be carried out by a competent person and must be in accordance with the current legislation in force at the time of installation, in the country of destination.

The manufacturer's instructions must not be taken as overriding any statutory requirements.

GAS LEAKS. DO NOT OPERATE ANY ELECTRICAL SWITCHES, OR USE A NAKED FLAME. TURN OFF THE GAS SUPPLY. VENTILATE THE AREA BY OPENING DOORS AND WINDOWS. CALL OUT YOUR LOCAL GAS SUPPLIER.

Control of Substances Hazardous to Health

Under Section 6 of the Health and Safety at Work Act 1974, it is required to provide information on substances hazardous to health.

The adhesives and sealants used in this appliance are cured and give no known hazard in this state.

Insulation Pads - These can cause irritation to skin, eyes and the respiratory tract. If you have a history of skin complaints you may be susceptible to irritation. High dust levels are usual only if the material is broken. Normal handling should not cause discomfort, but follow normal good hygiene and wash your hands before eating, drinking or going to the lavatory. If you do suffer irritation to the eyes or severe irritation to the skin seek medical attention.

Gas and Electricity Consumer Council (Energywatch)

Energywatch is an independent organisation, which protects the interests of gas users. If you need advice concerning energy issues, they may be contacted on their consumer help line number: 08459 060708, or via their web site;

http://www.energywatch.org.uk.

1.2 GENERAL DESCRIPTION

The appliances incorporate a microprocessor based, fully modulating air/gas ratio control system with direct burner ignition, which provides a modulated heat output to either central heating (CH) or domestic hot water (DHW) demands, and with internal frost protection provided as standard across the range. The heat exchanger is constructed from stainless steel.

A combined circulating pump, diverter valve and automatic air vent assembly, pressure gauge, safety valve and system expansion vessel are included. Isolation valves are fitted to the service connections. The CBX appliances have a DHW flow detection device, which gives priority to DHW demand and proportions the required heating load to the DHW flow rate, an electro-mechanical 24 hour time clock is also fitted as standard to the CBX appliances.

The appliances may be used with any certified mains voltage room thermostat, (or programmer/ room thermostat SBX appliances), and can operate without the need for an automatic bypass valve, however if thermostatic radiator valves are installed it is recommended that one radiator is fitted with lockshield valves, (normally in the bathroom), to allow the pump overrun facility to operate correctly. A separate CH expansion vessel is not required if the total CH system content is less than 84 litres, but one is required for systems with volumes greater than 84 litres; refer to section 3.7. A separate DHW expansion vessel is not required for the CBX appliances.

2 TECHNICAL SPECIFICATIONS

2.1 GAS CATEGORIES

These appliances are certified to comply with the requirements of EN 483, EN 677, and EN 625 for use in GB and IE (Great Britain and Ireland) using the following gas categories:

Eden CBX 38, Eden CBX 32, Eden CBX 24, Eden SBX 30:

II_{2H3P} (G20 with a governed gas supply at 20 mbar (8 in.wg) inlet pressure).

Eden CBX 38 Propane, Eden CBX 32 Propane, Eden CBX 24 Propane, Eden SBX 30 Propane:

II_{2H3P} (G31 (Propane) with a regulated gas supply at 37 mbar (14.9 in.wg) inlet pressure).

The appliance classification (as defined in EN 483) may be any of the following depending on the chosen flue option: C_{13}, C_{33}, C_{53}, or B_{23}

2.2 PERFORMANCE DATA

Appliance			CBX38	CBX32	CBX24	SBX30	CBX38 Propane	CBX32 Propane	CBX24 Propane	SBX30 Propane
Mode	**Rate**									
Central Heating Output (non-condensing) (80 - 60 °C)	Max	kW (Btu/h)	30.0 (102400)	24.0 (81900)	18.0 (61400)	30.0 (102400)	30.0 (102400)	24.0 (81900)	18.0 (61400)	30.0 (102400)
	Min	kW (Btu/h)	9.0 (30700)	7.9 (27000)	5.9 (20100)	8.2 (28000)	9.0 (30700)	7.9 (27000)	5.9 (20100)	8.2 (28000)
Central Heating Output (condensing) (50 - 30 °C)	Max	kW (Btu/h)	32.1 (109500)	25.7 (87700)	19.3 (65900)	32.1 (109500)	32.1 (109500)	25.7 (87700)	19.3 (65900)	32.1 (109500)
Central Heating Input Max Rate	Net	kW (Btu/h)	30.6 (104440)	24.5 (83600)	18.4 (62800)	30.4 (103700)	30.6 (104440)	24.5 (83600)	18.4 (62800)	30.4 (103700)
	Gross	kW (Btu/h)	34.0 (116000)	27.2 (92800)	20.4 (69600)	33.8 (115300)	33.2 (113400)	26.6 (91000)	20.0 (68300)	33.0 (112700)
Central Heating Input Min Rate	Net	kW (Btu/h)	9.2 (31400)	7.3 (24900)	5.5 (18800)	7.6 (26000)	9.2 (31400)	7.3 (24900)	5.5 (18800)	7.6 (26000)
	Gross	kW (Btu/h)	10.2 (34800)	8.2 (28000)	6.1 (20800)	8.4 (28600)	10.0 (34000)	7.9 (27000)	6.0 (20500)	8.3 (28300)
Domestic Hot Water Output	Max	kW (Btu/h)	38.0 (129600)	32.0 (109200)	24.0 (81900)		38.0 (129600)	32.0 (109200)	24.0 (81900)	
	Min	kW (Btu/h)	9.0 (30700)	7.9 (27000)	5.9 (20100)		9.0 (30700)	7.9 (27000)	5.9 (20100)	
Domestic Hot Water Input Max rate	Net	kW (Btu/h)	38.8 (132300)	32.7 (111600)	24.5 (83600)		38.8 (132300)	32.7 (111600)	24.5 (83600)	
	Gross	kW (Btu/h)	43.1 (146900)	36.2 (123500)	27.2 (92800)		42.1 (143600)	35.5 (121000)	26.6 (90800)	
Domestic Hot Water Input Min rate	Net	kW (Btu/h)	9.2 (31400)	7.3 (24900)	5.5 (18800)		9.2 (31400)	7.3 (24900)	5.5 (18800)	
	Gross	kW (Btu/h)	10.2 (34800)	8.2 (28000)	6.1 (20800)		10.0 (34000)	7.9 (27000)	6.0 (20500)	

Central Heating Gas Rate (after 10 min operation - hot)	Max	m3/h (ft3/h) kg/h	3.24 (114.4)	2.59 (91.5)	1.95 (68.9)	3.22 (113.7)	2.2	1.9	1.43	2.36
Domestic Hot Water Gas Rate (after 10 min operation - hot)	Max	m3/h (ft3/h) kg/h	41.0 (144.8)	3.46 (122.2)	2.59 (91.5)		2.8	2.55	1.9	

Seasonal Efficiency	%	90.2	90.8	90.2	90.4	92.3	92.2	92.2	92.4
Seasonal Efficiency (SEDBUK)	Band	"A"							
Nox Classification	Class	"5"							

BENCHMARK No. | | | | | | |

benchmark™ COLLECTIVE MARK

GAS BOILER COMMISSIONING CHECKLIST

BOILER SERIAL No. _____ **NOTIFICATION No.** _____

CONTROLS *To comply with the Building Regulations, each section must have a tick in one or other of the boxes*

TIME & TEMPERATURE CONTROL TO HEATING	ROOM T/STAT & PROGRAMMER/TIMER ☐	PROGRAMMABLE ROOMSTAT ☐
TIME & TEMPERATURE CONTROL TO HOT WATER	CYLINDER T/STAT & PROGRAMMER/TIMER ☐	COMBI BOILER ☐
HEATING ZONE VALVES	FITTED ☐	NOT REQUIRED ☐
HOT WATER ZONE VALVES	FITTED ☐	NOT REQUIRED ☐
THERMOSTATIC RADIATOR VALVES	FITTED ☐	
AUTOMATIC BYPASS TO SYSTEM	FITTED ☐	NOT REQUIRED ☐

FOR ALL BOILERS CONFIRM THE FOLLOWING

THE SYSTEM HAS BEEN FLUSHED IN ACCORDANCE WITH THE BOILER MANUFACTURER'S INSTRUCTIONS	☐
THE SYSTEM CLEANER USED	
THE INHIBITOR USED	

FOR THE CENTRAL HEATING MODE, MEASURE & RECORD

GAS RATE	☐ m3/hr	☐ ft3/hr
BURNER OPERATING PRESSURE (IF APPLICABLE)	☐ N/A	☐ mBar
CENTRAL HEATING FLOW TEMPERATURE		☐ °C
CENTRAL HEATING RETURN TEMPERATURE		☐ °C

FOR COMBINATION BOILERS ONLY

HAS A WATER SCALE REDUCER BEEN FITTED?	YES ☐ NO ☐
WHAT TYPE OF SCALE REDUCER HAS BEEN FITTED?	

FOR THE DOMESTIC HOT WATER MODE, MEASURE & RECORD

GAS RATE	☐ m3/hr	☐ ft3/hr
MAXIMUM BURNER OPERATING PRESSURE (IF APPLICABLE)	☐ N/A	☐ mBar
COLD WATER INLET TEMPERATURE		☐ °C
HOT WATER OUTLET TEMPERATURE		☐ °C
WATER FLOW RATE		☐ lts/min

FOR CONDENSING BOILERS ONLY CONFIRM THE FOLLOWING

THE CONDENSATE DRAIN HAS BEEN INSTALLED IN ACCORDANCE WITH THE MANUFACTURERS INSTRUCTIONS	YES ☐

FOR ALL INSTALLATIONS CONFIRM THE FOLLOWING

THE HEATING AND HOT WATER SYSTEM COMPLIES WITH CURRENT BUILDING REGULATIONS	☐
THE APPLIANCE AND ASSOCIATED EQUIPMENT HAS BEEN INSTALLED AND COMMISSIONED IN ACCORDANCE WITH THE MANUFACTURER'S INSTRUCTIONS	☐
IF REQUIRED BY THE MANUFACTURER, HAVE YOU RECORDED A CO/CO_2 RATIO READING	N/A ☐ YES ☐ CO/CO_2 RATIO
THE OPERATION OF THE APPLIANCE AND SYSTEM CONTROLS HAVE BEEN DEMONSTRATED TO THE CUSTOMER	☐
THE MANUFACTURER'S LITERATURE HAS BEEN LEFT WITH THE CUSTOMER	☐

COMMISSIONING ENG'S NAME

PRINT	CORGI ID No.
SIGN	DATE

54

1

2

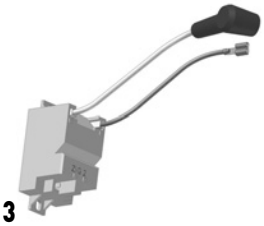
3

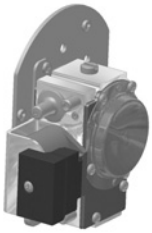
4

5

6

7

8

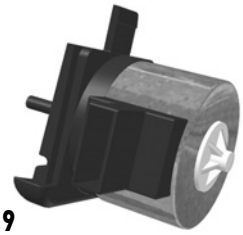
9

10

11

12

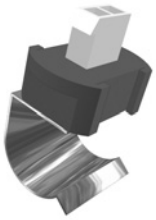
13

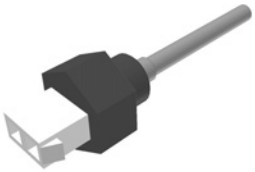
14

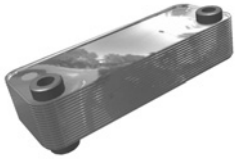
15

16

17

18

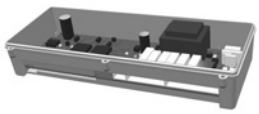
19

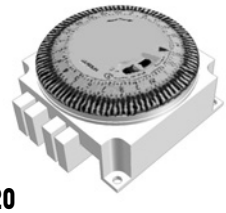
20

21

22

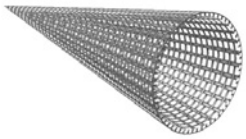
23

24

Appliance		CBX38	CBX32	CBX24	SBX30	CBX38 Propane	CBX32 Propane	CBX24 Propane	SBX30 Propane
Design Domestic Hot Water Performance raised 35 °C	l/min (gpm)	15.6 (3.4)	13.1 (2.8)	9.8 (2.2)		15.6 (3.4)	13.1 (2.8)	9.8 (2.2)	
DHW Specific Rate (D) EN 625	l/min	18.1	15.3	11.5		18.1	15.3	11.5	
Min Mains Water Inlet Pressure for Max Heat Output	Bar (psi)	1.0 (14.5)				1.0 (14.5)			
Min Mains Water Inlet Pressure for Operation	Bar (psi)	0.1 (1.5)				0.1 (1.5)			
Max Mains Water Inlet Pressure	Bar (psi)	10 (145)				10 (145)			
Min Domestic Hot Water Flow Rate for Operation	l/min (gpm)	2.5 (0.5)				2.5 (0.5)			
Min Central Heating System Pressure	Bar	0.7							
Max Central Heating System Pressure	Bar	2.5							
Max Domestic Hot Water Temp.	°C	60				60			
Min Domestic Hot Water Temp.	°C	40				40			
Max Central Heating Flow Temp.	°C	80							
Min Central Heating Flow Temp.	°C	30							

2.3 GENERAL SPECIFICATIONS

Natural Gas and Propane versions

Appliance		CBX38	CBX32	CBX24	SBX30
Total weight (full)	kg	55.4	54.9	51.7	55.2
Total weight (empty)	kg	52.8	52.8	49.9	52.8
Max lift weight	kg	42.2	42.0	39.0	41.0
Total water capacity	l	2.4	2.1	1.8	2.4
Integral expansion vessel capacity	l	8			
Maximum heating system water content using fitted expansion vessel, @ 0.75 bar	l	84			
Electrical supply		230V 50Hz Fuse at 3A			
Internal fuse		T4H 4A 250V			
Maximum power consumption	W	148			
IP Rating		IP33			
Flue gas temperature Nat Gas 80/60 (Propane)	°C	80	79 (77)	74 (72)	73 (76)
Flue gas temperature Nat Gas 50/30		62	41	43	41
CO_2 value max rate (Nat Gas) Front door fitted	%	9.2-9.6	9.0-9.4	8.5-8.9	9.0-9.4
CO_2 value min rate (Nat Gas) ref only Front door fitted	%	8.2-8.6	8.2-8.6	8.2-8.6	8.7-9.1
CO value max rate (Nat Gas) Front door fitted	P.P.M.	5-150			
CO_2 value max rate (Propane) Front door fitted	%	10.3-11.0			
CO_2 value min rate (Propane) ref only Front door fitted	%	9.4-10.0			9.7-10.3
CO value max rate (Propane) Front door fitted	P.P.M.	100-240			
Flue products mass flow rate (Nat Gas)	g/s	17.4	14.7	11.0	13.7
Flue products mass flow rate (Propane)	g/s	17.4	14.7	11.0	13.7
Gas Valve Offset @ min rate	Pa	-3.0			

Connections	CBX32	CBX24	SBX30	CBX38
Gas	15 mm compression			22 mm compression
CH flow	22 mm compression			
CH return	22 mm compression			
DHW inlet CBX appliance only	15 mm compression			
DHW outlet CBX appliance only	15 mm compression			
DHW return SBX appliance only	22 mm compression			
Pressure relief valve outlet	15 mm tail			
Condensate Drain	21.5 - 22 mm plastic overflow pipe			

2.4 OVERALL DIMENSIONS AND MINIMUM CLEARANCES

1

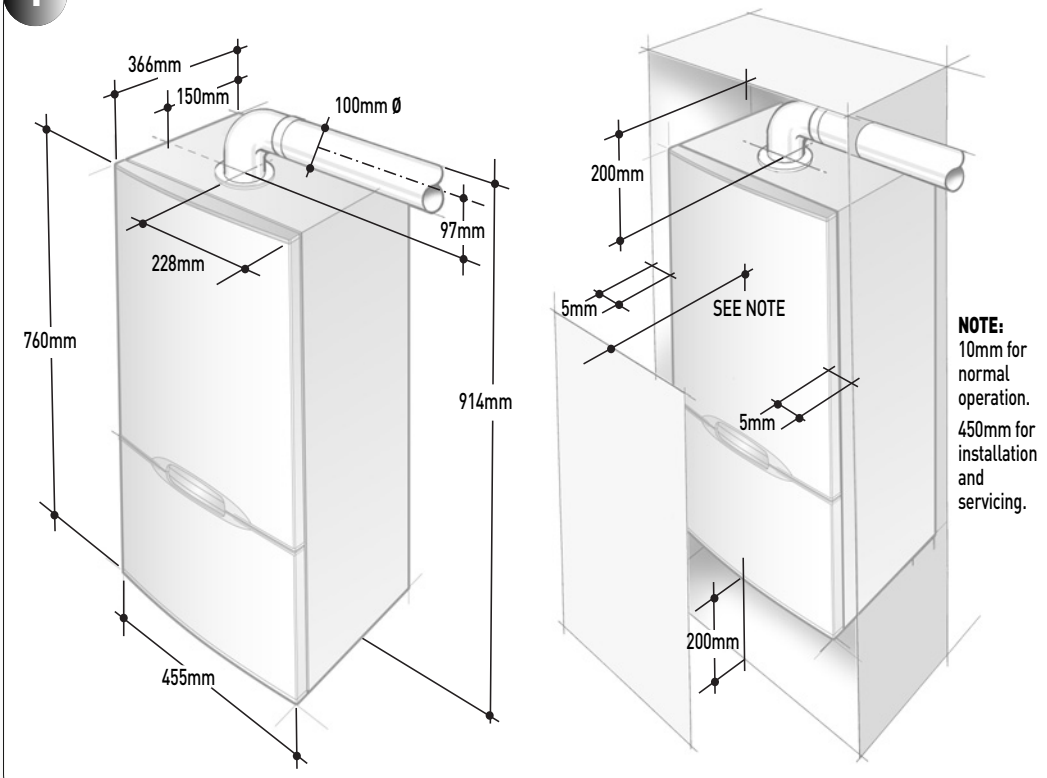

2.5 CONCENTRIC AIR / FLUE DUCT SPECIFICATIONS

The EDEN 'x-type' range can be installed to a number of different concentric flue systems. The different flue applications as shown in Figure 2 are available as kits usually comprising the connecting parts to the appliance and end terminal. Flue extension ducts and extension elbows are available as accessories.

10 SHORT PARTS LIST

Refer to Figure 54

Key	G C Part No.	Description	No off	Makers Pt No.
1		Ignition Electrode	1	988526
2		Detection Electrode	1	988527
3		Spark generator Unit incl. spark leads	1	500665
4a		Gas Control Valve - NG/LPG (CBX24/32 SBX30)	1	988315
4b		Gas Control Valve - NG/LPG (CBX38)	1	988640
5		Fan Assembly	1	601015
6a		Burner (CBX32)	1	700601
6b		Burner (CBX24)	1	700600
6c		Burner (CBX38/SBX30)	1	700602
7a		Heat Exchanger (CBX32)	1	451031
7b		Heat Exchanger (CBX24)	1	451032
7c		Heat Exchanger (CBX38/SBX30)	1	451030
8		Pump Head (6 metre)	1	500672
9		Diverter Valve Motorised Head	1	500673
10		Hydroblock Assembly	1	500650
11		Expansion Vessel	1	451020
12		Pressure Relief Valve	1	300734
13		Water Temperature Sensor	2	500661
14		Flue Sensor	1	500660
15a		Plate Heat Exchanger (CBX24/32)	1	451015
15b		Plate Heat Exchanger (CBX38)	1	451018
16		Plate Heat Exchanger Filter	1	500498
17		Pressure Gauge	1	450961
18		Auto Air Vent	1	500674
19		Control PCB incl cover	1	988488
20		Time Clock	1	600520
21		DHW Flow Turbine	1	300733
22a		DHW Flow Regulator (CBX32)	1	300715
22b		DHW Flow Regulator (CBX24)	1	300717
22c		DHW Flow Regulator (CBX 38)	1	300719
23		DHW Filter	1	500497
24		Manual Bleed valve	1	300730
		Heat Exchanger o-ring kit		988489
		Hydroblock o-ring kit		988490

9.21 CONTROL PCB

Refer to Figures 19, 24 & 52

a) Ensure supply voltage is isolated.

b) Lower the controls front panel and lower the control fascia panel.

c) Unplug the electrical leads from the PCB. Refer to section 7.

d) Unplug the BCC if fitted.

e) Remove the PCB plastic cover.

f) Unclip the PCB and withdraw.

g) Carefully remove the three control knobs, noting their position and fit onto new PCB.

h) Fit the new PCB and plug in the BCC if previously used.

i) Re-assemble in reverse order, ensuring control knobs are free to move and reset button operates.

j) Turn ON the electrical supply and set the ON/OFF switch to ON, if the Reset LED, (Refer to section 8.3), shows steady red proceed as follows:

a) Press the **Reset** button. The **Reset** LED and LED 1 should flash once.

b) Wait approximately 5 seconds, while the control is re-programmed and then press the **Reset** button, to initialise the control.

9.22 TIME CLOCK (CBX APPLIANCES ONLY)

a) Ensure supply voltage is isolated.

b) Lower the controls front panel and lower the control fascia panel.

c) Unplug the electrical leads from the PCB. Refer to section 7.

d) Unplug the four electrical leads from the back of the clock.

e) Remove the four retaining screws and withdraw the clock from the control panel.

f) Fit the new clock and re-assemble in reverse order.

9.23 DHW FLOW TURBINE, DHW FLOW REGULATOR AND DHW FILTER (CBX APPLIANCES ONLY)

Refer to Figure 28

a) Ensure supply voltage is isolated.

b) Remove the electrical lead to the DHW flow turbine.

c) Close the DHW inlet isolating cock, open a DHW tap at the lowest point in the system and allow the pressure to dissipate. Close this tap again.

d) Undo the nut connecting the DHW flow turbine to the DHW inlet isolating cock.

e) Undo the nut connecting the DHW flow turbine to the water feed pipe, and remove the DHW flow turbine, (containing the DHW Flow Regulator).

f) The DHW filter is located inside the flow cock. To remove it, first remove the top hat washer and then prise the filter out with a pointed tool.

g) The assembly can now be flushed clean using water, and parts replaced as necessary.

h) Re-assemble in reverse order, using a new fibre washer; ensure that all joints and seals are correctly re-fitted.

i) Open the DHW inlet isolating cock and vent air from the system by opening each hot water tap in the house in turn.

52 PCB HOUSING

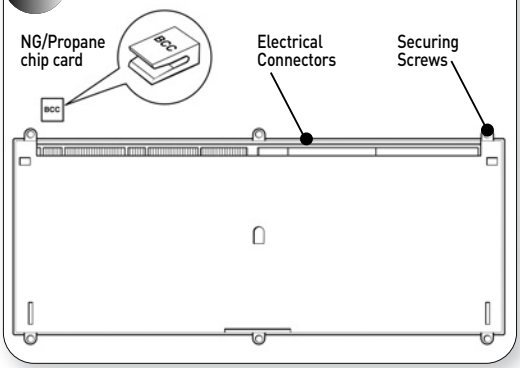

9.24 DRAINING THE APPLIANCE

There may be some slight water spillage; so electrical components should be protected.

Refer to Figures 43 & 53

a) Before draining, give the appliance a brief CH demand, to ensure the diverter valve is in the CH position.

b) Ensure supply voltage is isolated.

c) If not draining the entire CH system, close the CH flow, CH return water isolating cocks.

d) Close the DHW return water-isolating cock, (where fitted).

e) Drain down the system from the external drain point, and drain the appliance using the drain tap on the CH flow water isolating cock, in conjunction with the manual air vent located on the LHS of the heat exchanger; refer to Figures 43 and 53.

f) Where the DHW circuit is to be worked on, close the DHW inlet isolating cock, open a DHW tap at the lowest point in the system and allow the pressure to dissipate. Close this tap again.

Note: the pressure relief valve should not be used to drain the system.

53 DRAIN POINT

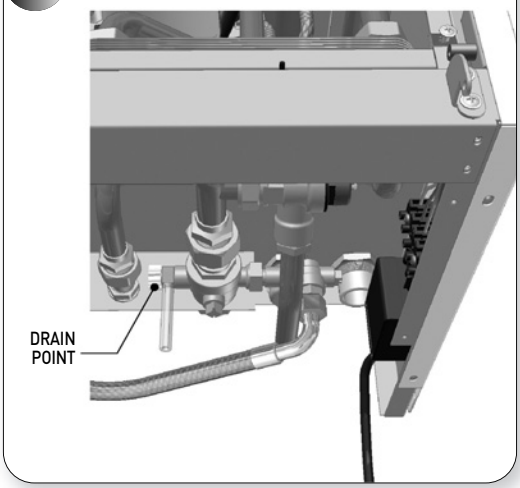

2 FLUE OPTIONS

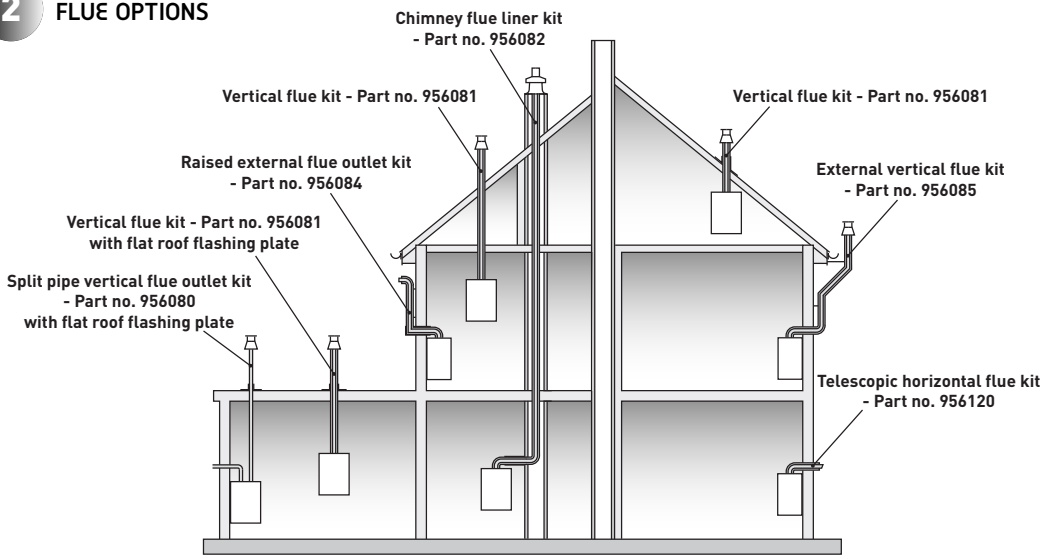

Flue system application

The following systems are available for the EDEN 'x-type' range.
For full fitting instructions refer to the leaflet supplied with the flue kit.

2.5.1 KIT A + TELESCOPIC HORIZONTAL WALL TERMINAL (C13) - PART NO. 956120

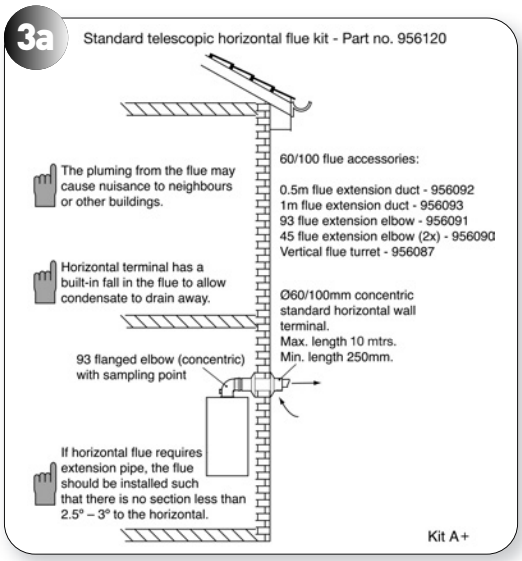

Traditional concentric flue system, Figure 3a, with a maximum length of 10m*. The flanged flue elbow is designed with 3° slope towards the appliance so that the condensate can easily drain off. It has to be considered that for every metre horizontal flue length the terminal exit centreline is approx. 45 mm higher than the elbow's centreline. The standard telescopic terminal is 615mm max length and 430mm min length, but can be cut to a minimum flue length of 250mm, which is suitable for single, 100mm (4"), brick walls.

2.5.2 KIT B VERTICAL CONCENTRIC FLUE TERMINAL (C33) - HBL PART 956081

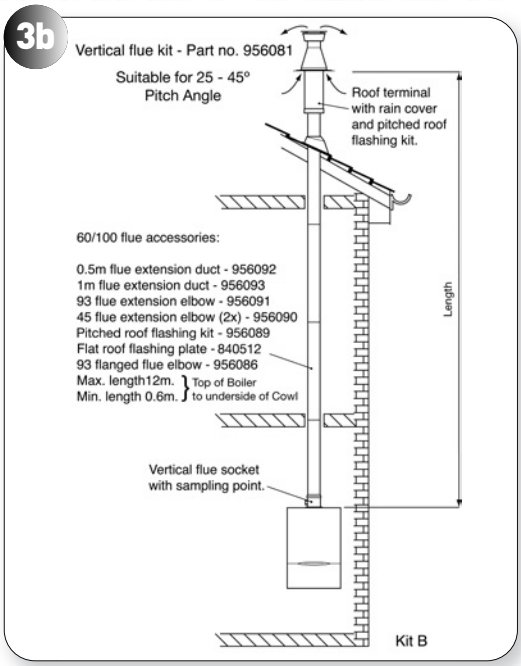

Standard concentric (ø100/60) vertical flue application, Figures 3b, 3c, through roof attics with a maximum length of 12m*. The kit comprises of the roof terminal, vertical adaptor with sampling point and bracket. The maximum length is measured from the top of the appliance casing to the underside of the air cowl.

*** Note: Flues which exceed 7mtrs in length will be subject to a small percentage decrease in heat input (below the standard tolerance) as shown in graph 'A' on the following page.**

GRAPH A

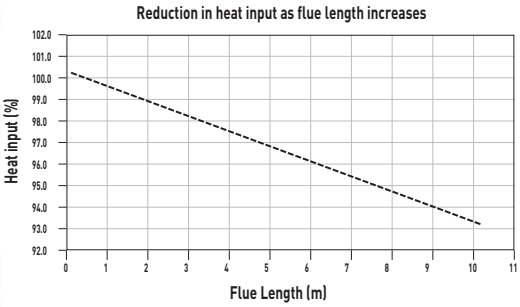

Horizontal flues (C_{33}) up to 10m in length, or equivalent, may be used, however a reduction in the heat input will occur. The graph shows details.

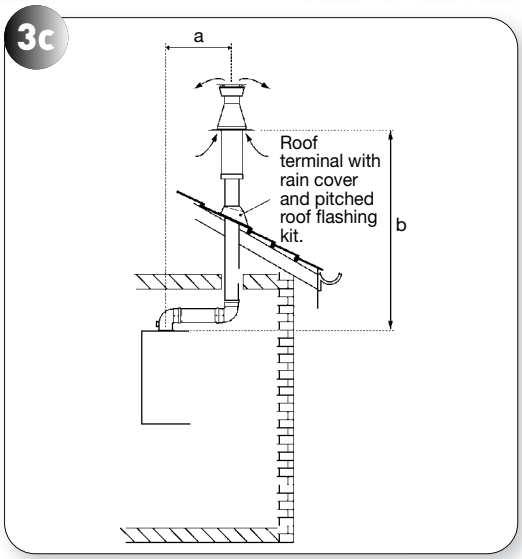

Fig 3(c) Offset vertical flue.

'a' measured from boiler flue outlet centre line to the centre line of the extension elbow.
'b' measured from the top of the boiler to the underside of the air cowl.
Maximum allowable length of a + b = 8900mm

2.5.3 KIT C: HORIZONTAL ANTI-PLUME FLUE KIT (C13) - PART NO. 956084

If the standard horizontal terminal is likely to cause nuisance to a neighbour or buildings, because of excess pluming, then this particular flue kit raises the flue gas outlet point to a higher elevation with the minimum amount of changes. The flue gas duct is teed-off from the concentric part and covered by an 80mm outer tube to protect the flue duct from freezing. The air in-take remains at the lower level (see Figure 3d).

If choosing this option then the external flue duct length should be taken into account when calculating equivalent flue length.

For installation details refer to the flue kit instructions.

Dimensions from vertical terminals to opening windows should be in line with Figure 5.

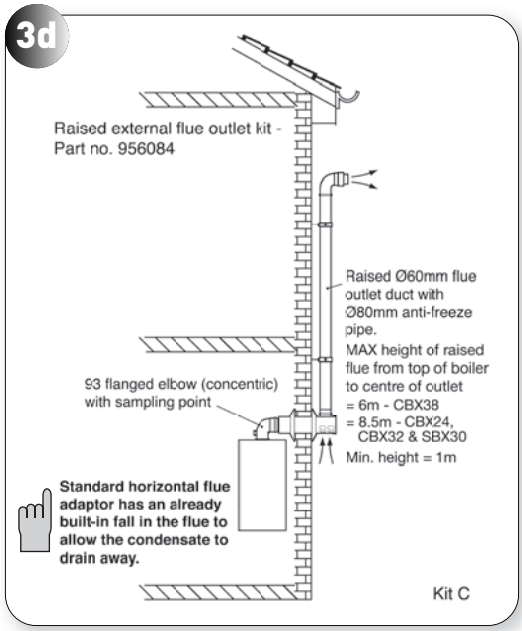

2.5.4 KIT D EXTERNAL VERTICAL FLUE - (C33) PART NO. 956085

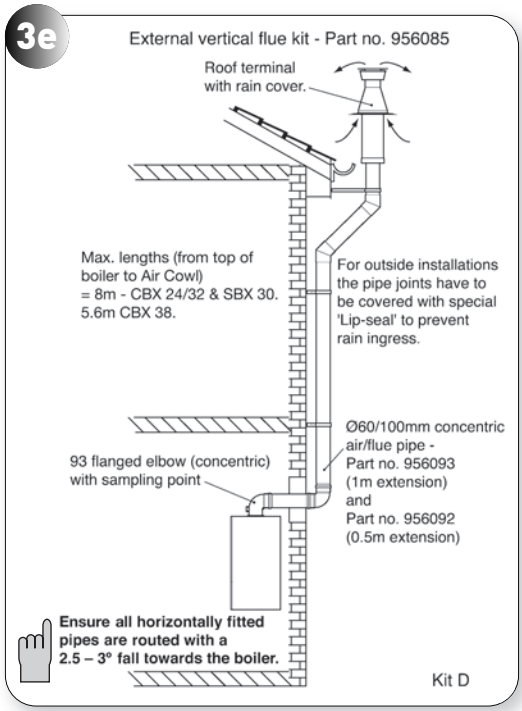

Suitable for installations if the appliance can't be repositioned and where other horizontal flue options may cause some nuisance to neighbours or buildings. The flue kit contains some additional 45° elbows and extension ducts as well as a special wall bracket to pass the guttering (see Figure 3e). The concentric flue will be routed vertically alongside the outside wall to above the roofline. Special seals are required to prevent rainwater penetrating the pipe joints.

For installation details refer to the flue kit instructions.

50 FLUE SENSOR

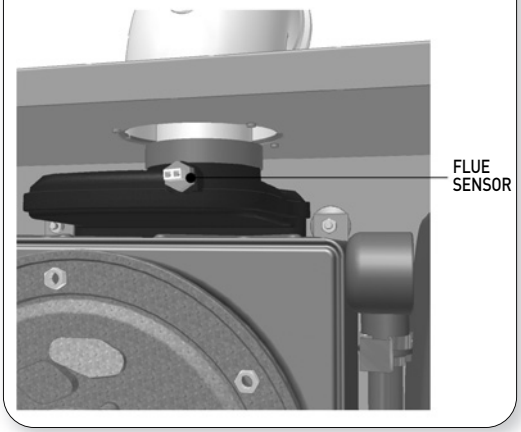

9.17 PLATE HEAT EXCHANGER AND FILTER (CBX APPLIANCES ONLY)

Refer to Figure 51

a) Ensure supply voltage is isolated.

b) Drain down the appliance; refer to section 9.24.

c) Close the DHW inlet isolating cock, open a DHW tap at the lowest point in the system and allow the pressure to dissipate. Close this tap again.

d) Undo the nut connecting the flow pipe from the main heat exchanger to the plate heat exchanger, and rotate in an anticlockwise direction to give access to the filter.

e) Lift out the filter and clean under a tap.

g) Refit the filter, or replace as necessary, and re-assemble in reverse order; ensure that all joints and seals are correctly re-fitted.

h) If it is suspected that the plate heat exchanger is blocked or is leaking then proceed as follows:

i) Undo the nut connecting the pipe from the hydroblock to the plate heat exchanger, and rotate out of the way.

j) Undo the nut connecting the plate heat exchanger to the CH flow water isolating cock pipe.

k) Undo the nut connecting the plate heat exchanger to the DHW outlet pipe.

l) Undo the nut connecting the plate heat exchanger to the DHW water isolating cock pipe.

m) Lift up the plate heat exchanger and remove.

n) Fit the replacement plate heat exchanger, using new case seals as necessary, ensuring the filter is fitted.

o) Re-assemble in reverse order; ensure that all joints and seals are correctly re-fitted.

p) Open the isolating cocks and vent air from the system using the manual air vent. Re-pressurise the system as necessary and check for water leaks.

51 PLATE HEAT EXCHANGER

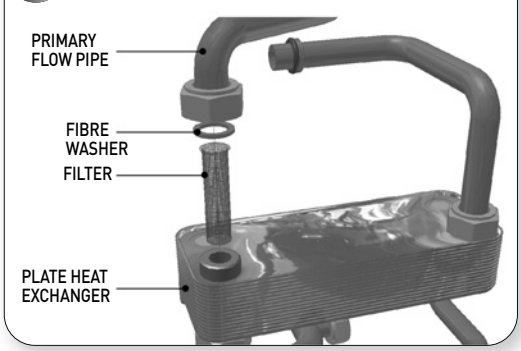

9.18 CONDENSATE DRAIN SYSTEM

Refer to Figure 27

a) Ensure supply voltage is isolated.

b) Open the drain sump cap, while holding a receptacle beneath to capture any condensate.

c) Disconnect the condensate drainpipe from the appliance.

d) Undo the two locknuts holding the system in place.

e) Unclip the hose from the support bracket.

f) Detach the condensate drainpipe sump adaptor, by gently pulling down.

g) Remove the condensate drain system, clean or replace as necessary.

h) Re-assemble in reverse order; ensure that all joints and seals are correctly re-fitted.

9.19 PRESSURE GAUGE

Refer to Figure 24

a) Ensure supply voltage is isolated.

b) Drain down the appliance; refer to section 9.24.

c) Disconnect the pressure gauge capillary from the pressure relief valve.

d) Disengage the pressure gauge from the fascia panel, and remove the gauge.

e) Fit the new pressure gauge and re-assemble in reverse order.

f) Open the isolating cocks and vent air from the system using the manual air vent. Re-pressurise the system as necessary and check for water leaks.

9.20 AUTO AIR VENT

Refer to Figure 47

a) Ensure supply voltage is isolated.

b) Drain down the appliance; refer to section 9.24.

c) Disconnect the vent tube from the auto air vent and check that it is free from blockage.

d) Unscrew the auto air vent, and fit replacement.

e) Re-assemble in reverse order; ensure that all joints and seals are correctly re-fitted.

f) Open the isolating cocks and vent air from the system using the manual air vent. Re-pressurise the system as necessary and check for water leaks.

9.13 EXPANSION VESSEL

Refer to Figure 48

a) Ensure supply voltage is isolated.

b) Drain down the appliance; refer to section 9.24.

c) Remove the spire clip on the case in front of the expansion vessel.

d) Undo the nut connecting the flexible hose to the expansion vessel and remove hose.

e) Slide the expansion vessel forward and remove.

f) Slide the replacement expansion vessel in place.

g) Re-assemble in reverse order; ensure that all joints and seals are correctly re-fitted.

h) Open the isolating cocks and vent air from the system using the manual air vent. Re-pressurise the system as necessary and check for water leaks.

48 EXPANSION VESSEL

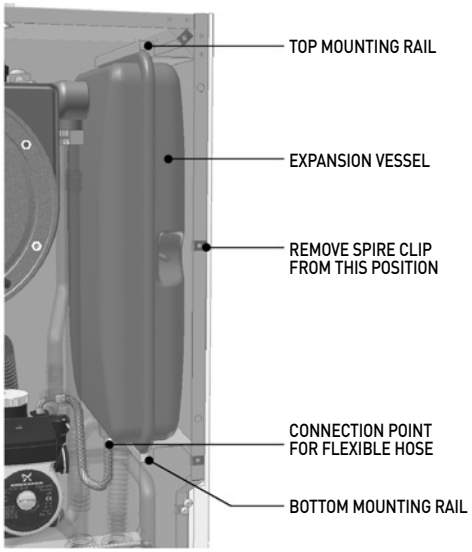

9.14 PRESSURE RELIEF VALVE

Refer to Figures 18 & 24

a) Ensure supply voltage is isolated.

b) Drain down the appliance; refer to section 9.24.

c) Undo the nut securing the discharge tail pipe to the pressure relief valve and remove. Undo the nut securing the pressure gauge capillary, and remove.

d) Undo the nut securing the pressure relief valve to the CH flow pipe and remove the pressure relief valve.

e) Fit the replacement pressure relief valve, using new fibre washers.

f) Re-assemble in reverse order; ensure that all joints and seals are correctly re-fitted.

g) Open the isolating cocks and vent air from the system using the manual air vent. Re-pressurise the system as necessary and check for water leaks.

Note: the pressure relief valve should not be used to drain the system.

9.15 WATER TEMPERATURE SENSORS

Refer to Figure 49

a) Ensure supply voltage is isolated.

b) Disconnect the electrical lead from the sensor to be changed.

c) Unclip the sensor from the pipe and remove.

d) Clip the replacement sensor onto the pipe and position as shown in Figure 49.

e) Reconnect the electrical lead.

49 49a FLOW SENSOR

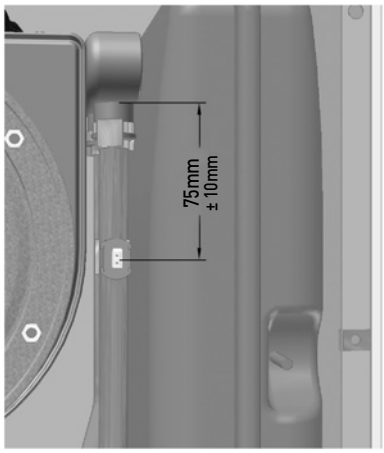

49b RETURN SENSOR

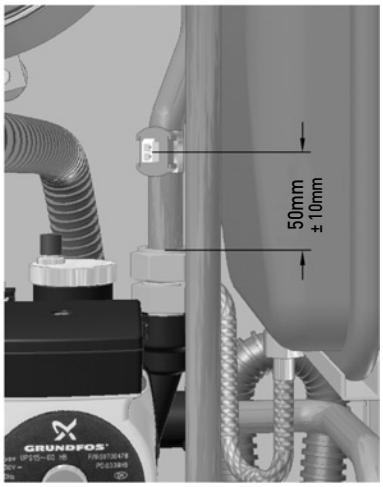

9.16 FLUE SENSOR

Refer to Figure 50

a) Ensure supply voltage is isolated.

b) Disconnect the electrical lead from the flue sensor.

c) Unscrew the flue sensor and remove from the flue hood.

d) Fit the replacement flue sensor and reconnect the electrical lead (blue plug).

2.6 KIT E CHIMNEY FLUE LINER KIT (B23) - PART NO. 956082

This kit is suitable for open flue application in accordance with BS5440 where a room sealed flue installation is impractical. The kit comprises of a flue adaptor from the appliance to the chimney, a flexible plastic flue liner with connection parts and chimney terminal (see Figure 3f). Where an open flue system is used, then an air vent must be provided in the same room or internal space as the flue duct air inlet, see section 3.4.

For installation details refer to the flue kit instructions.

Maximum flue resistive length = 30m.

3f

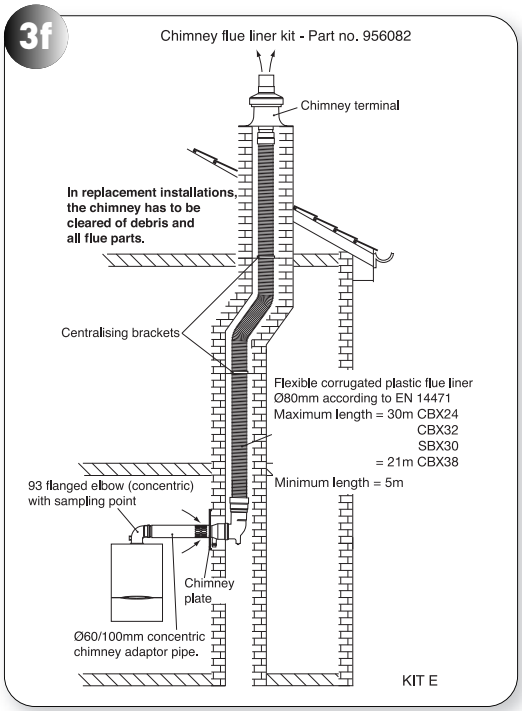

A flue system can be built up from the components detailed in the table, but the total flue resistance must not exceed the maximum stated.

2.7 KIT F: TWIN FLUE SYSTEM (C53) PART NO. 956080

This flue system kit is designed for installations where the air intake position is different than the flue duct exit point. The kit comprises of a twin adaptor from which the air intake is taken from the adjacent outside wall (see example Figure 3g) and the flue duct is routed vertically through the roof.

It has to be noted that the flue duct is under pressure when the appliance is in operation and the duct can leak poisonous carbon monoxide if the duct components are not correctly assembled. It is **not** recommended to route the flue duct through living space areas, i.e. bed rooms, living rooms etc.

For installation details refer to the instructions provided with the twin flued kit.

For C53 flue systems the terminal for the supply of combustion air and for the evacuation of combustion products shall not be installed on opposite walls of the building.

Maximum flue resistance permitted for a twin flued system = 52 Pa
Minimum flue resistance permitted for a twin flued system = 23.5 Pa

Flue Component	Flue Resistance (Pa)	Part Number
Twin Flue Adaptor (required)	9.5	-
Air Inlet Terminal (required)	3	-
Chimney Terminal (required)	0.5	-
80 mm dia straight duct 1 metre	1	956101
80 mm dia straight duct 2 metre	2	956102
90° Elbow (80/80)	8	956100
45° Elbow (80/80)	4	956099

3g

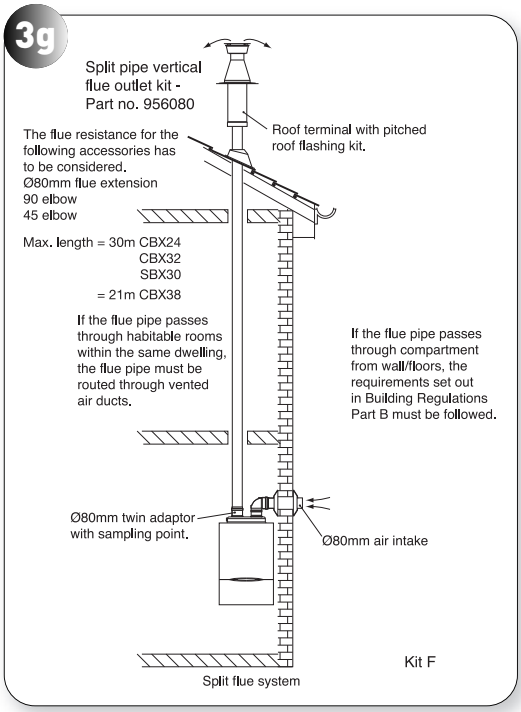

A flue system can be built up from the components detailed in the table, but the total flue resistance must not exceed the maximum stated.

FLUE LENGTHS

Length supplied in standard kit - horizontal	815mm
Max horizontal length (from boiler to chimney - 60/100mm)	2000mm
Min horizontal length (from boiler to chimney - 60/100mm)	100mm
Max vertical length (from boiler to chimney - 60/100mm)	2000mm
Min vertical length (from boiler to chimney - 60/100mm)	200mm
Length supplied in standard kit - vertical (available in 10m, 20m and 30m length)	N/A
FLEXITUBE MUST BE PURCHASED AS AN ACCESSORY TO COMPLETE THE KIT (See below)	
Flexi tube min length	5m
Flexi tube max length	30m

ACCESSORIES

Description	Part No.	Resistive Length
HORIZONTAL - 60/100 Accessories		
Flue extension duct - 500mm	956092	450mm
Flue extension duct - 1000mm (Incl. 1 x support bracket)	956093	950mm
93° extension elbow	956091	1550mm
45° extension elbow (pair)	956090	775mm
Air inlet duct - included in kit	N/A	N/A
Straight adapter (60/80) - included in kit	N/A	N/A
91.5° adapter elbow (80/80) - included in kit	N/A	N/A
Support bracket - 100mm	840517	N/A
93° flanged elbow - included in kit	956082	N/A
Vertical turret socket	956087	N/A
VERTICAL - Accessories		
Flexi tube - 10m	956110	10m
Flexi tube - 20m	956111	20m
Flexi tube - 30m	956112	30m
Straight duct (80) - included in kit	N/A	N/A
Chimney terminal - included in kit	N/A	N/A

NOTE: RESISTIVE LENGTH INFORMATION ONLY REQUIRED FOR COAXIAL FLUE PARTS. THE CORRUGATED (FLEXI TUBE) FLUE PARTS ARE FIXED AND ALL PARTS ARE REQUIRED FOR EVERY APPLICATION.

9.11 DIVERTER VALVE MOTORISED HEAD

Refer to Figure 46

a) Ensure supply voltage is isolated.

b) Disconnect the electrical lead to the diverter valve motorised head.

c) Unscrew the locating screw; refer to Figure 46.

d) Unclip the diverter valve motorised head and slide it down to disengage it from the hydroblock body.

e) Fit the replacement diverter valve motorised head.

f) Re-assemble in reverse order; ensure that all joints and seals are correctly re-fitted.

46 DIVERTER VALVE MOTORISED HEAD

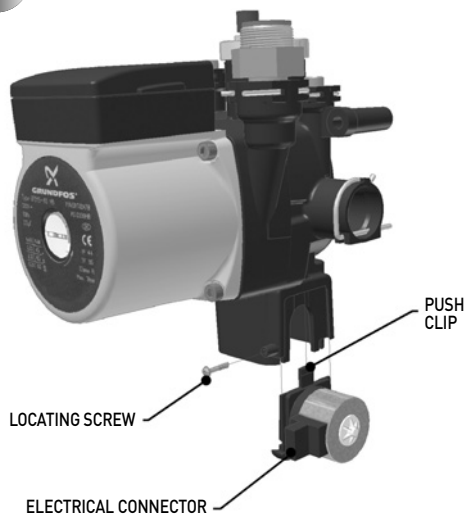

9.12 HYDROBLOCK ASSEMBLY

Refer to Figure 47

a) Ensure supply voltage is isolated.

b) Disconnect the electrical leads to the pump head and diverter valve motorised head.

c) Drain down the appliance; refer to section 9.24.

d) Remove the flow and return pipes from the heat exchanger; refer to section 9.8.

e) Remove the clip holding the hydroblock adaptor fitting in place, and remove fitting.

f) Remove the two clips holding the return pipes in place.

g) Undo the nut connecting the CH return pipe to the CH return isolating cock, and disengage the CH return pipe from the hydroblock.

h) On CBX appliances, undo the nut connecting the DHW return pipe to the plate heat exchanger and disengage the DHW return pipe from the hydroblock.

i) On SBX appliances, undo the nut connecting the secondary return pipe to the secondary return isolating cock and disengage the secondary return pipe from the hydroblock.

j) Remove the clip holding the flexible hose in place, and remove hose.

k) Unscrew the three screws holding the hydroblock onto the mounting studs, and remove the hydroblock.

l) Align the replacement hydroblock against the mounting studs and secure using the three screws.

m) Re-assemble in reverse order; ensure that all joints and seals are correctly re-fitted.

n) Open the isolating cocks and vent air from the system using the manual air vent. Re-pressurise the system as necessary and check for water leaks.

Note: It is likely that there will still be some water spillage when the Hydroblock is removed.

47 HYDROBLOCK ASSEMBLY

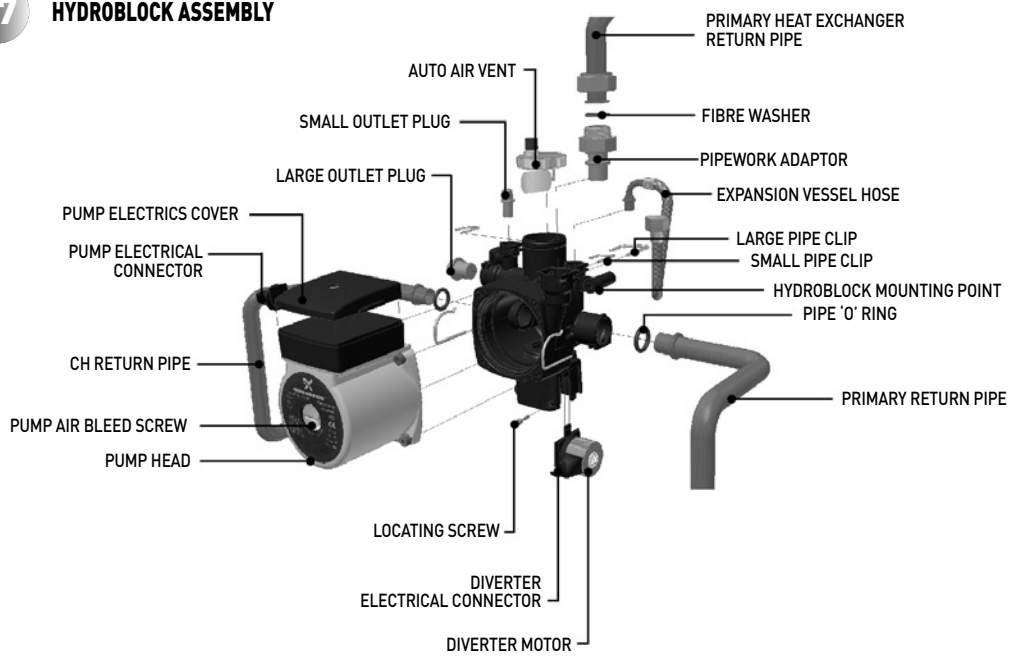

j) Disconnect the condensate drainpipe from the condensate drainpipe sump adaptor; refer to section 9.18.

k) Unscrew the three nuts holding the heat exchanger to the back panel; refer to Figure 43.

l) Remove the heat exchanger.

m) Disconnect the condensate drainpipe sump adaptor from the heat exchanger.

n) Remove the flue hood from the heat exchanger, two screws, and fit the flue hood onto the new heat exchanger, Check integrity of the flue hood seals and replace as necessary. Remove the manual air vent and vent tube from the heat exchanger and fit onto to new heat exchanger; refer to Figure 43.

o) Fit the condensate drainpipe sump adaptor to the heat exchanger and flue hood.

p) Re-assemble in reverse order; check integrity of the flow and return pipe 'O' rings and fibre washers and replace as necessary. Ensure that all joints and seals are correctly re-fitted.

q) Open the isolating cocks and vent air from the system using the manual air vent. Re-pressurise the system as necessary and check for water leaks.

Note: It is likely that the heat exchanger will still contain water.

43 HEAT EXCHANGER

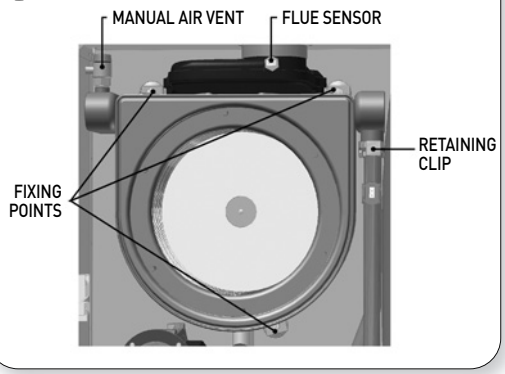

9.9 FLUE HOOD

Refer to Figures 44

a) Ensure supply voltage is isolated, and that the gas supply is isolated.

b) Remove the gas control valve, fan & burner assembly; refer to section 6.2.

c) Remove the heat exchanger: refer to section 9.8.

d) Disconnect the condensate drainpipe sump adaptor from the heat exchanger; refer to section 9.18.

e) Remove the existing flue hood from the heat exchanger, two screws, and fit the replacement flue hood onto the heat exchanger; use new flue hood seals; refer to Figure 44.

f) Fit the condensate drainpipe sump adaptor to the heat exchanger and flue hood.

g) Unscrew the flue sensor from the existing flue hood and fit onto the new flue hood; refer to section 9.16.

h) Re-assemble in reverse order; check integrity of the flow and return pipe 'O' rings and fibre washers and replace as necessary. Ensure that all joints and seals are correctly re-fitted.

i) Open the isolating cocks and vent air from the system using the manual air vent. Re-pressurise the system as necessary and check for water leaks.

44 FLUE HOOD

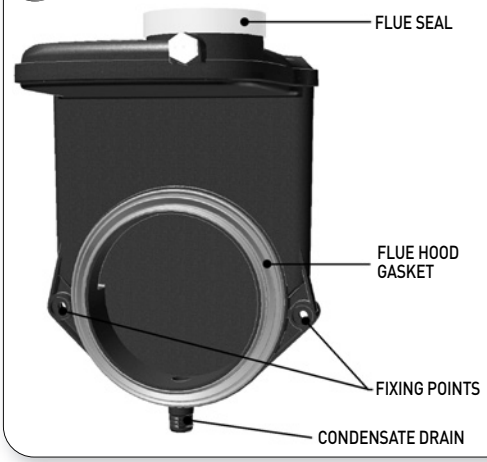

9.10 PUMP (HEAD ONLY)

Refer to Figure 45

a) Ensure supply voltage is isolated.

b) Disconnect the electrical lead to the pump head.

c) Drain down the appliance; refer to section 9.24.

d) Using a long Allen key unscrew the four screws holding the pump head; refer to Figure 45.

e) Remove the pump head, and fit replacement pump head, using a new 'O' ring seal.

f) Re-assemble in reverse order; ensure that all joints and seals are correctly re-fitted.

g) Open the isolating cocks and vent air from the system using the manual air vent. Re-pressurise the system as necessary and check for water leaks.

Note: It is likely that there will still be some water spillage when the head is removed.

45 PUMP HEAD

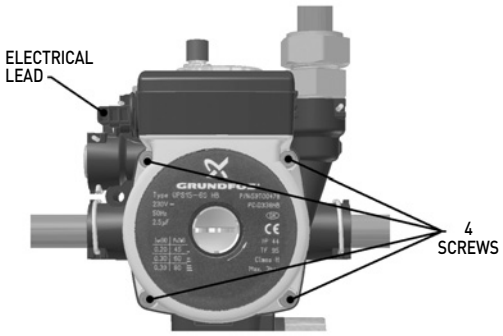

2.8 ADDITIONAL CONCENTRIC FLUE KITS

The following additional concentric kits are available as optional extras.

Flue Extension Ducts - 1000 mm and 500 mm long, (each duct extends the flue length by up to 950 mm and 450 mm respectively).

93° Extension Elbow - Allows an additional bend in the flue, and has an 'equivalent length' of 1550 mm. This elbow is mechanically different from the flanged elbow supplied as standard with the appliance, but has the same equivalent length.

45° Extension Elbow - Allows an additional bend in the flue and has an 'equivalent length' of 775 mm.

Vertical Turret Socket - For use with elevated horizontal flues and vertical terminals.

Vertical Roof Terminal - For use where an external wall is not available, or where it is desirable to route the ducts vertically.

For installation details refer to the instructions provided with the individual flue kits.

These optional kits may be used with the standard flue kits to produce an extensive range of flue options, providing that the following rules are strictly obeyed.

a) The maximum/minimum permissible length of the room sealed flue system are:

Horizontal flue terminal (all orientations)	maximum 10000 mm (394 in)
Horizontal flue terminal (rear exit)	minimum 250 mm (10 in)
Vertical flue terminal	maximum 12000 mm (472 in)
Vertical flue terminal	minimum 600 mm (23 1/2 in)

The 'equivalent' flue length must not exceed the maximum values stated.

b) The standard terminal must always be fitted horizontally; horizontal ducts must have a continuous fall towards the appliance of 2.5°. This ensures condensate runs back into the appliance from the flue system. The vertical terminal must always be used if a vertical outlet is required.

c) The concentric flue system must use either a flanged elbow or a vertical flue turret socket at the entry/exit to the appliance.

d) All joints must be correctly made and secured in accordance with the installation instructions. When cutting ducts, avoid swarf, uneven and sharp edges to maintain duct integrity.

Refer to Figures 2 and 3 to determine which option kits are required before commencing the installation. Instructions for installing the appliance with a horizontal flue and straight extension ducts are included in the main text of these instructions (section 4.8).

2.8.1 PLUME DIVERTER TERMINAL INSTALLATION

Plume Diverter Kit Part No: 956103

(For use with Standard horizontal telescopic flue kit - Part no 956120 - only)

This kit is provided to assist in fitting a condensing boiler with reduced clearances when fitted in good practice according to the Guide to Condensing Boiler Installation published by DEFRA/HMSO.

This kit allows the boiler flue outlet to be directed to the left or to the right only.

INSTALLATION INSTRUCTIONS

Under certain operating conditions condensing appliances have a tendency to form a plume of water vapour at the terminal. Therefore consideration should be given when fitting the Plume Diverter in terms of plume dispersal onto adjacent surfaces and neighbouring properties.

a) Refer to section 2.5 for instructions on fitting the flue system. Also see Figure 5 for all other clearances.

The resistance of the diverter is equivalent to 0.5 metre of flue length. Ensure this is used when calculating the maximum allowable flue length. (maximum horizontal flue length restricted to 4.5 metres when using the plume diverter).

3h

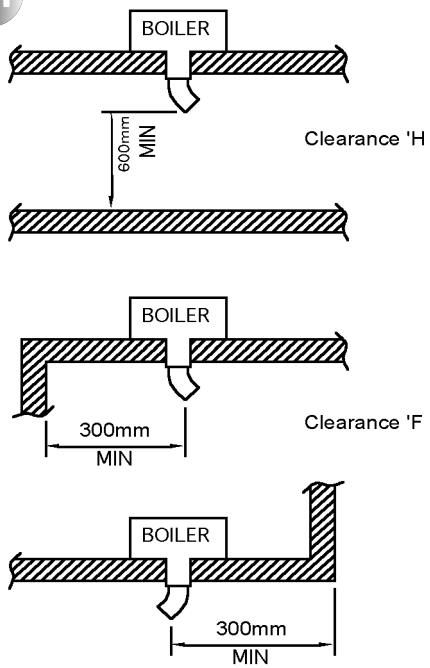

The diverter allows the terminal clearance to be reduced as follows (see diagrams below):
Clearance H – From a surface facing the terminal - 600mm.
Clearance F – From internal or external clearances - 300mm.

b) Choose the direction required to deflect the flue products **(left or right only)**

c) Push the diverter elbow onto the angled outlet of the flue terminal in the desired rotational position and ensure the diverter is pushed up to the shoulder to fully engage the rubber seal.

d) Fix the diverter to the flue terminal with the self drilling screw provided. **Do not use a power tool to fit screw.**

3i

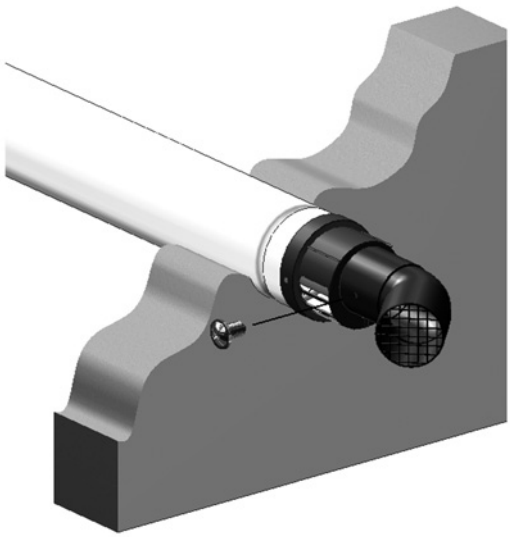

Note.
The Plume Diverter terminal must not under any circumstances deflect flue products downwards.

2.9 APPLIANCE HYDRAULIC CIRCUITS

4a **Central Heating Mode (CBX)**

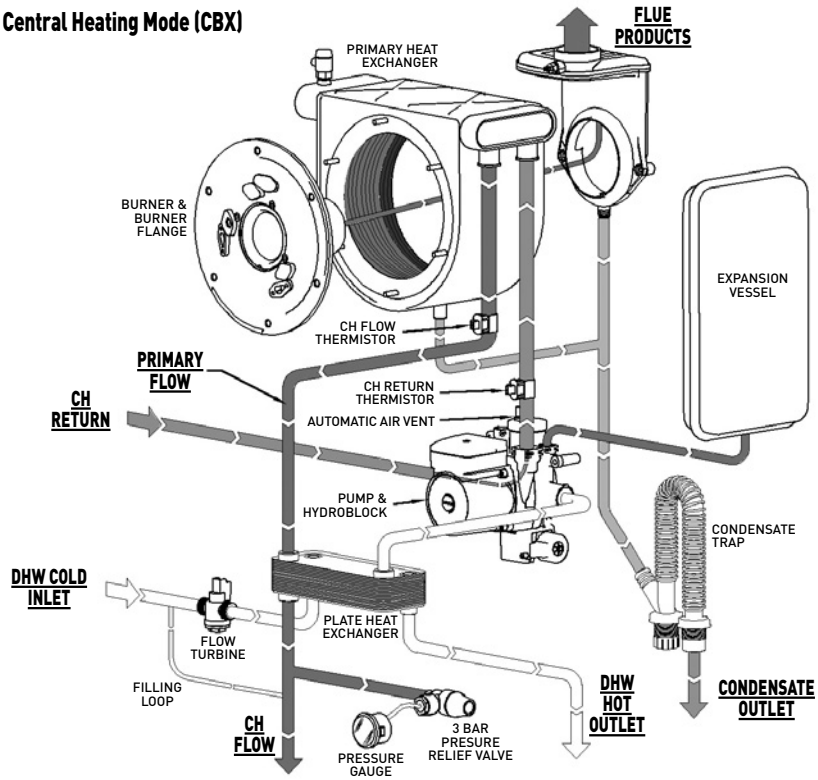

9.5 BURNER

Refer to Figures 38, 39 & 40

a) Ensure supply voltage is isolated, and that the gas supply is isolated.

b) Remove the gas control valve, fan & burner assembly; refer to section 6.2.

c) Unscrew the three torx screws, (T-25), holding the manifold to the combustion chamber front cover, and remove the manifold; refer to Figure 38.

d) Remove the gasket, and withdraw the burner; refer to Figure 39

e) Fit replacement burner, taking care not to damage the insulation, and ensure burner is correctly located by lining up the locating tab.

f) Fit new gasket; refer to Figure 40.

g) Re-assemble in reverse order; ensure that all joints and seals are correctly re-fitted.

9.6 COMBUSTION CHAMBER FRONT INSULATION

The design of the appliance is such that the combustion chamber insulation should not require replacement unless mechanically damaged. It is recommended that to prevent dust, the insulation be dampened prior to removal, and that a protective mask is worn when changing or handling the insulation material.

Refer to Figure 41

a) Ensure supply voltage is isolated, and that the gas supply is isolated.

b) Remove the gas control valve, fan & burner assembly; refer to section 6.2.

c) Remove the electrodes; refer to section 9.1.

d) Remove the burner: refer to section 9.5.

e) Replace the combustion chamber front insulation.

f) Re-assemble the burner and electrodes, using new gaskets.

g) Check the position of the electrodes: refer to section 6.4.

h) Re-assemble in reverse order; ensure that all joints and seals are correctly re-fitted.

41 COMBUSTION CHAMBER FRONT INSULATION

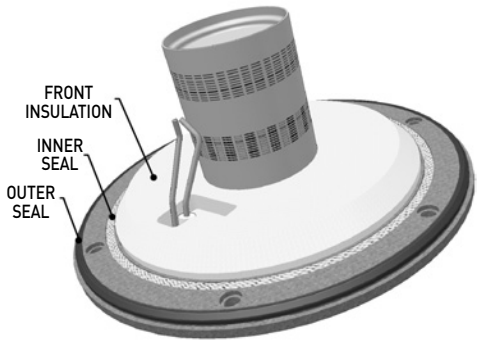

9.7 COMBUSTION CHAMBER REAR INSULATION

Refer to Figure 42

a) Ensure supply voltage is isolated, and that the gas supply is isolated.

b) Remove the gas control valve, fan & burner assembly; refer to section 6.2.

c) Use an Allen key to undo the central screw holding the rear insulation in place.

d) Remove old insulation and fit replacement, ensuring locating washer is in front.

e) Re-assemble in reverse order; ensure that all joints and seals are correctly re-fitted.

42 COMBUSTION CHAMBER REAR INSULATION

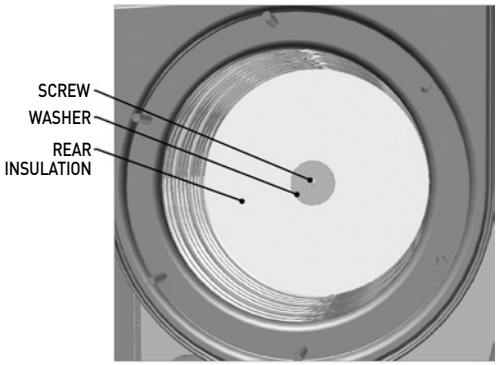

9.8 HEAT EXCHANGER

Refer to Figures 15 & 43

a) Ensure supply voltage is isolated, and that the gas supply is isolated.

b) Remove the gas control valve, fan & burner assembly; refer to section 6.2.

c) Disconnect the electrical leads to the flue sensor, flow sensor and return sensor.

d) Drain down the appliance; refer to section 9.24.

e) Disconnect the flue system from the appliance, 4 screws, and lift up to disengage the flue from the flue hood; refer to Figure 15.

f) Remove the retaining clip from the heat exchanger flow outlet, and undo the nut connecting the flow pipe to the plate-to-plate heat exchanger. On SBX appliances undo the nut connecting the flow pipe to the CH flow isolating cock; refer to Figure 43.

g) Rotate the flow pipe anticlockwise and gently pull down to disengage the flow pipe from the heat exchanger.

h) Remove the retaining clip from the heat exchanger return inlet, and undo the nut connecting the flow pipe to the hydroblock adaptor fitting.

i) Rotate the return pipe clockwise and gently pull down to disengage the return pipe from the heat exchanger.

If the gas control valve is changed, then when the appliance is running, the flue gas CO_2 should be measured, refer to section 6.1, and compared to the values stated section 2.3. If the measured value does not correspond to the Performance Data, then contact: Halstead Boilers Ltd. Service Help line: 0844 371 1111.

Always seal the gas valve adjustment screw with paint after adjustment

9.4 FAN

Refer to Figures 35, 36, & 37

a) Ensure supply voltage is isolated, and that the gas supply is isolated.

b) Remove the gas control valve, fan & burner assembly; refer to section 6.2.

c) Remove the gas control valve including air inlet cowl; refer to section 9.3.

d) Unscrew the three screws holding the lower section of the black plastic air inlet cowl and gas valve mounting plate, remove plate and cowl; refer to Figures 35 and 36.

e) Unscrew the four screws holding the fan to the burner manifold, and remove fan; refer to Figure 37.

f) Attach and secure the replacement fan, replace the gasket.

g) Re-assemble in reverse order; ensure that all joints and seals are correctly re-fitted.

36 GAS VALVE MOUNTING PLATE

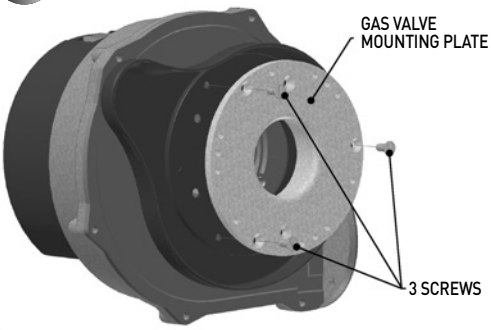

37 FAN MOUNTING SCREWS

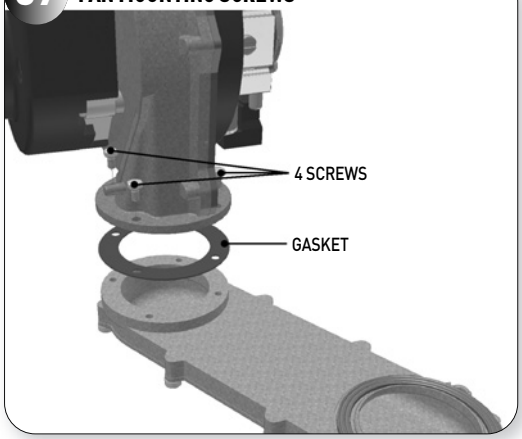

38 MANIFOLD MOUNTING SCREWS

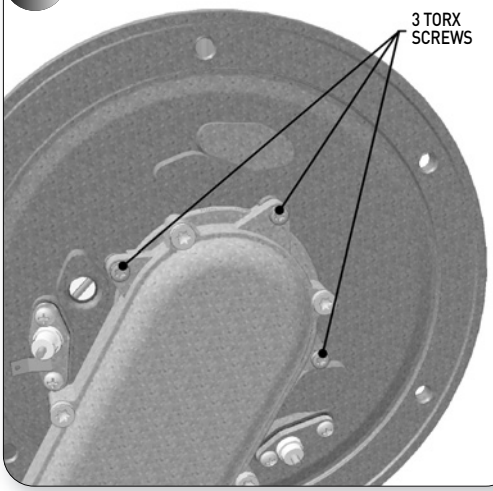

39 WITHDRAWING BURNER

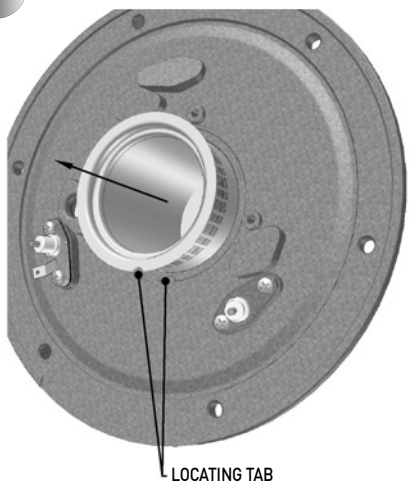

40 BURNER GASKET

4b Domestic Hot Water Mode (CBX)

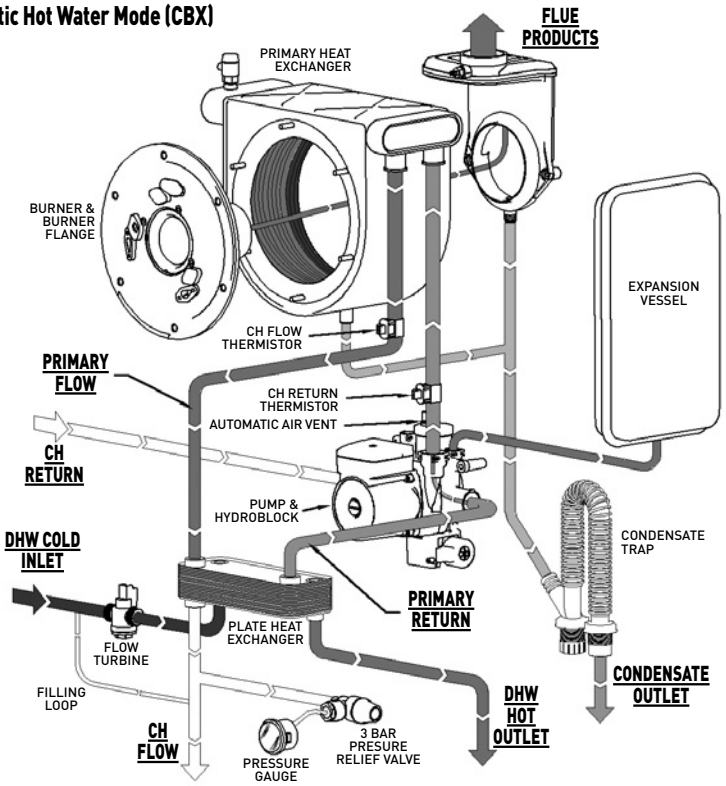

4c Central Heating Mode (SBX)

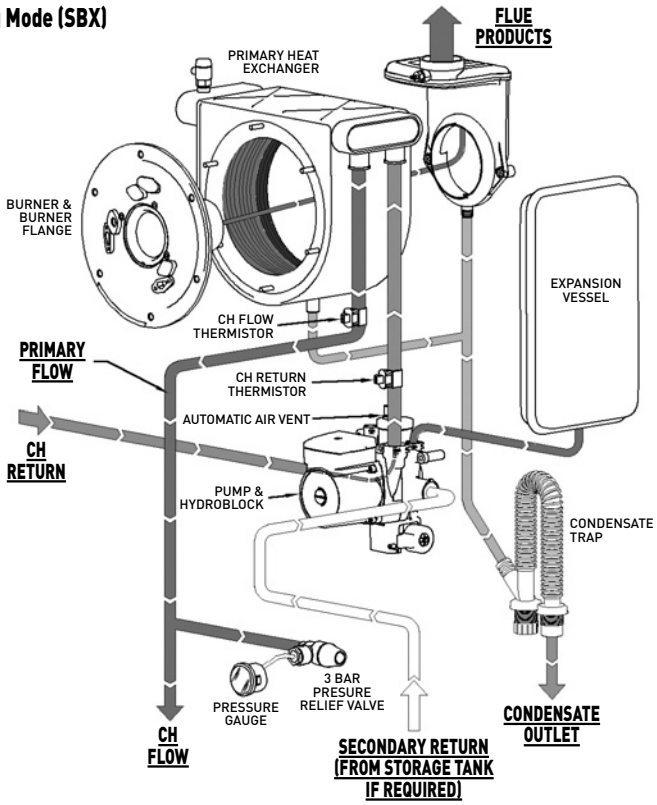

3 INSTALLATION REQUIREMENTS

3.1 STATUTORY REQUIREMENTS

GAS SAFETY (INSTALLATION AND USE) REGULATIONS 1996 (AS AMENDED)

The appliance is suitable only for installation in GB and IE and should be installed in accordance with the rules in force.

In GB, a CORGI Registered Installer must carry out the installation. It must be carried out in accordance with the relevant requirements of the:

Gas Safety (Installation and Use) Regulations

The appropriate Building Regulations either The Building Regulations, The Building Regulations (Scotland), Building Regulations (Northern Ireland).

The Water Fitting Regulations or Water Byelaws in Scotland.

The Current I.E.E Wiring Regulations.

Where no specific instructions are given, reference should be made to the relevant British Standard code of Practice.

In IE, the installation must be carried out by a Competent Person and installed in accordance with the current edition of I.S.813 "Domestic Gas Installations", the current Building Regulations and reference should be made to the current ETCI rules for electrical installation.

It should also be in accordance with the relevant recommendations in the current editions of the following British Standards and Codes of Practice: BS 5449, BS 5546, BS 5440-1, BS 5440-2, BS 6798, BS 6891, Institute of Gas Engineer document IGE/UP-7, BS 7074 (expansion vessel), BS 5482 (propane installations) and IS813 for IE.

IMPORTANT NOTE: Manufacturer's instruction must NOT be taken in any way as overriding statutory obligations.

3.2 APPLIANCE LOCATION

THE FOLLOWING LIMITATIONS MUST BE OBSERVED WHEN SITING THE APPLIANCE:

a) The appliance is not suitable for external installations. The position selected for installation should be within the building, unless otherwise protected by a suitable enclosure and MUST allow adequate space for installation, servicing and operation of the appliance and for air circulation around it (Section 2.4 and 3.4).

b) This position MUST allow for a suitable flue system and terminal position. The appliance must be installed on a flat vertical wall, which is capable of supporting the weight of the appliance and any ancillary equipment.

c) If the appliance is to be fitted in a timber framed building it should be fitted in accordance with the British Gas publication 'Guide for Gas Installations In Timber Frame Housing', Institute of Gas Engineers document IGE/UP-7. If in doubt, advice must be sought from the Local Gas Supplier.

d) The appliance is approved to a protection rating of IP33. Therefore if the appliance is to be installed in a room containing a bath or a shower, any electrical switch or control utilising mains electricity must be so situated that it cannot be touched by a person using the bath or shower. Attention is drawn to the requirements of the current BS 7671 (I.E.E Wiring Regulations) and in Scotland the electrical provisions of the Building Regulations applicable in Scotland.

3.3 FLUE TERMINAL POSITION

DETAILED RECOMMENDATIONS FOR FLUE INSTALLATION ARE GIVEN IN BS 5440-1. THE FOLLOWING NOTES ARE FOR GENERAL GUIDANCE.

a) The appliance MUST be installed so that the terminal is exposed to the external air.

b) It is important that the position of the terminal allows free passage of air across it at all times.

c) It is ESSENTIAL TO ENSURE that products of combustion discharging from the terminal cannot re-enter the building or any other adjacent building, through ventilators, windows, doors, other sources of natural air infiltration, or forced ventilation / air conditioning.

d) The minimum acceptable dimensions from the terminal to obstructions and ventilation openings are specified in Figure 6.

e) If the terminal discharges into a pathway or passageway check that combustion products will not cause nuisance and that the terminal will not obstruct the passageway.

f) Where the lowest part of the terminal is fitted less than 2000 mm (78 in) above the ground, above a balcony or above a flat roof to which people have access, the terminal MUST be protected by a purpose designed K6 terminal guard (optional extra: Part No. 951507).

g) The air inlet / flue outlet MUST NOT be closer than 25 mm (1 in) to combustible material.

h) Condensing appliances have a tendency to form a plume of water vapour at the terminal under certain operating conditions. This is normal but positions where this would cause damage or a nuisance should be avoided. Consideration should be given to the dispersal of the plume in terms of adjacent surfaces and neighbouring properties. A special flue terminal, (Kit C), is available to raise the flue discharge point; use of this terminal will limit the maximum flue length available.

For further information contact: Halstead Boiler Ltd, Service Help Line: 0844 371 1111.

3.4 VENTILATION REQUIREMENTS

Detailed recommendations for air supply are given in BS 5440-2.

The following notes are for general guidance.

a) It is not necessary to have a purpose provided air vent in the room or internal space in which a room-sealed appliance is installed.

b) Cupboard or compartment ventilation is not necessary for a room-sealed appliance providing that the minimum clearances are maintained.

c) Where an open flued, (B23), system is used, then an air vent must be provided in the same room or internal space as the flue duct air inlet, with a minimum free-area of at least:

CBX 38	159 cm^2
CBX 32	128.5 cm^2
CBX 24	87.5 cm^2
SBX 30	117 cm^2

9.3 GAS CONTROL VALVE INCLUDING AIR INLET COWL

Refer to Figures 33, 34 & 35

a) Ensure supply voltage is isolated, and that the gas supply is isolated.

b) Remove the gas control valve, fan & burner assembly; refer to section 6.2.

c) Unscrew four screws holding the gas feed pipe, and remove gas feed pipe, refer to Figure 33.

Note: Newer versions may have a single flange nut securing the gas feed pipe.

d) Unscrew three torx screws (T-20), and remove gas control valve, refer to Figure 34

e) Unclip the top section of the black plastic air inlet cowl from the fan assembly, and remove white plastic insert, clean or replace as necessary, refer to Figure 35.

f) Refit or replace the top section of the black plastic air inlet cowl, ensuring that it is clipped into place and that the holes in the white plastic insert are aligned with the fixing holes.

g) Attach and secure the gas feed pipe to the replacement gas valve, using a new gasket.

h) Attach and secure the replacement gas control valve to the fan assembly.

i) Re-assemble in reverse order; ensure that all joints and seals are correctly re-fitted.

Note: The gas control valve is factory set and sealed and is not adjustable. If the gas control valve is changed, then when the appliance is running, the flue gas CO_2 should be measured, refer to section 6.1, and compared to the values stated in Performance Data, section 2.2. If the measured value does not correspond to the Performance Data, then contact: Halstead Boilers Ltd. Service Help line: 0844 371 1111.

9.3.2 COMBUSTION CHECK SET-UP

When installing, commissioning or servicing a gas appliance that incorporates a pre-mix burner and zero-set governor, because it is not possible to measure an operating pressure the engineer should first check that the gas supply is metered and ascertain whether it is possible to measure the gas rate. If the gas input rate can be measured then the requirements of GSIUR 26(9) can be met, including any specific requirements in manufacturers' instructions.

If gas input rate cannot be measured then, to satisfy the intent of GSIUR 26(9), the engineer shall measure the combustion quality of the appliance in accordance with BS 7967 or the manufacturers' instructions.

If the engineer does not have the required equipment and no alternative test is specified by the manufacturer then the appliance shall be turned off and disconnected as an un-commissioned appliance until such time that equipment is available to undertake such tests.

If a new gas valve is fitted it must be adjusted as per the instructions that are supplied with the new gas valve.

A suitable, calibrated flue gas analyser is required to measure the CO_2.

IMPORTANT: After any adjustment of the gas valve, it is essential to check the combustion levels at minimum gas rate (table 2.3). If the Carbon Monoxide or Carbon Dioxide levels are outside the range quoted, call Halstead Boilers Ltd Technical Helpline on 0844 371 1111. **If in doubt ASK!**

33 GAS FEED PIPE CONNECTION TO GAS CONTROL VALVE

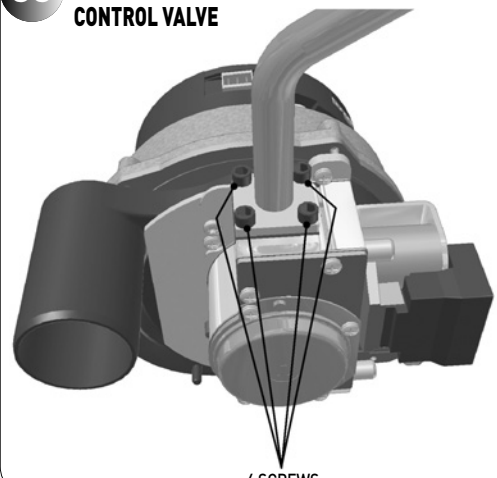

34 GAS CONTROL VALVE

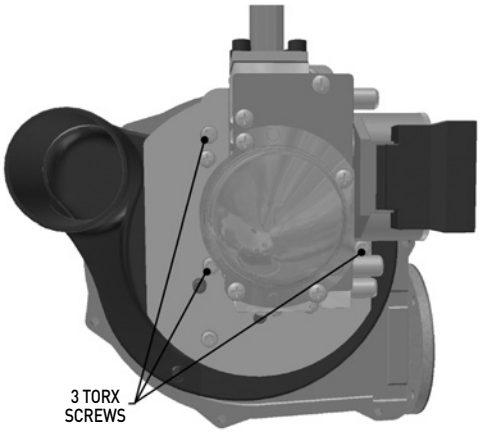

35 AIR INLET COWL

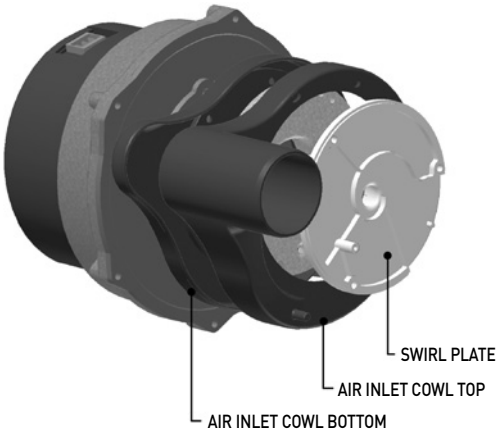

9 REPLACEMENT OF PARTS

Before commencing any service operation, ISOLATE the mains electrical supply and TURN OFF the gas supply at the main service cock.

Replacement of most parts first requires the removal of the sealed chamber front panels; refer to section 6.2.

There may be some slight water spillage; so electrical components should be protected.

It is the law that any service work must be carried out by a registered person.

9.1 IGNITION AND DETECTION ELECTRODES

Refer to Figure 31

a) Ensure supply voltage is isolated, and that the gas supply is isolated.

b) Remove the gas control valve, fan & burner assembly; refer to section 6.2.

c) Unscrew the two screws holding the electrode, remove electrode, and used gasket.

d) Fit the new electrode, and new gasket.

e) Check that electrode is aligned as detailed in Figures 26(a) or 26(b).

f) Re-assemble in reverse order. Ensure that all joints and seals are correctly re-fitted.

9.2 IGNITER UNIT AND IGNITION LEADS

Refer to Figure 32

a) Ensure supply voltage is isolated.

b) Remove the plug and earth lead from the ignition electrode.

c) Remove the electrical supply leads.

d) Unscrew the two screws holding the igniter unit, remove igniter unit.

e) Fit the new igniter unit.

f) Re-assemble in reverse order; ensure that the igniter unit is orientated as shown in Figure 32, and that the brown electric supply lead is fitted to position 1 on the igniter unit.

g) Ensure that all joints and seals are correctly re-fitted.

31

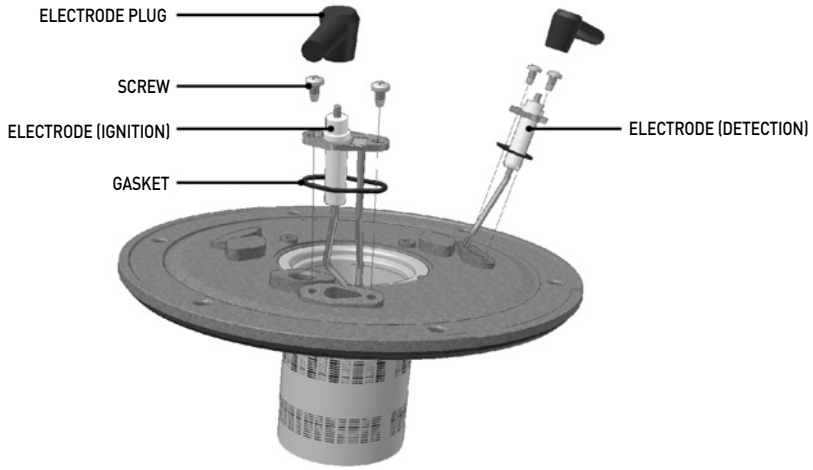

32

IGNITOR UNIT AND IGNITION LEADS

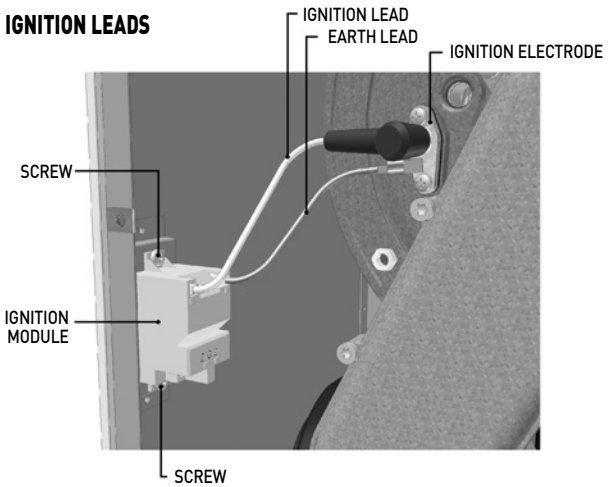

5 FLUE TERMINAL POSITION

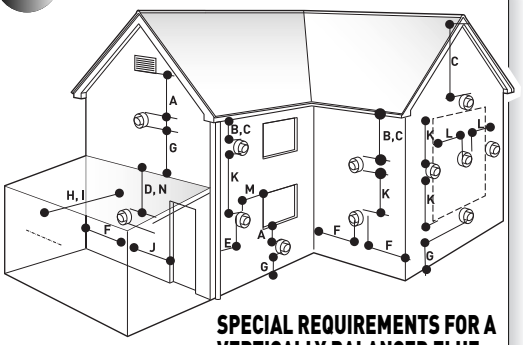

SPECIAL REQUIREMENTS FOR A VERTICALLY BALANCED FLUE

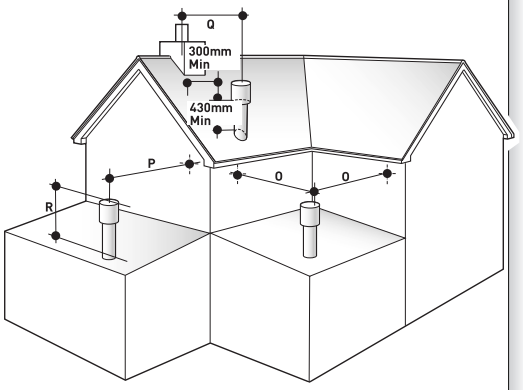

	Position	Minimum spacing	
A	Directly below an openable window, air vent, or any other ventilation opening	300mm	12in
B	Below gutter, drain/soil pipe	75mm	3in
C	Below eaves	200mm	8in
D	Below a balcony	200mm *2500mm	8in 98in
E	From vertical drain pipes and soil pipes	150mm	6in
F	From internal or external corners *internal corners	300mm *1000mm	12in 40in
G	Above adjacent ground or balcony level	300mm	12in
H	From a surface facing the terminal	600mm *2500mm	24in 98in
I	Facing terminals	1200mm *2500mm	48in 98in
J	From opening (door/window) in carport into dwelling	1200mm *not recommended	48in
K	Vertically from a terminal on the same wall	1500mm	60in
L	Horizontally from a terminal on the same wall	300mm	12in
M	Adjacent to opening	300mm	12in
N	Below carport	600mm *not recommended	24in
O	From adjacent wall	300mm	12in
P	From adjacent opening window	1000mm	40in
Q	From another terminal	600mm	24in
R	Minimum height	300mm	12in

*Recommended by the boiler manufacturing industry to prevent pluming nuisance and damage to buildings.

d) If the appliance is installed in a room or internal space with other opened flued appliances, then the size of the air vent necessary should be calculated in accordance with BS 5440-2 Table 2.

e) Where an open flued system is used, and the flue duct air inlet is within a compartment then high and low level air vents are necessary in the compartment, the size of the vents should be calculated in accordance with BS 5440-2 Table 2.

3.5 CONDENSATE DISPOSAL

The condensate drain connection is suitable for either 21.5 mm or 22 mm plastic push fit or adhesive overflow pipes and fittings. It should be piped to drain, preferably within the building, maintaining a continuous 2.5° fall away from the appliance. If the drain is routed to outside it should be to a drain or soak away, and any external pipe work should be in 32 mm. Insulation to protect from freezing in cold weather conditions is also advisable. Note if the appliance is installed in a garage all pipe work should be in 32 mm. Ensure that the condensate discharge system complies with any local regulations in force.

3.6 GAS SUPPLY

a) The Gas Supplier should be consulted at the installation planning stage in order to establish the availability of an adequate supply of gas.

b) An existing service pipe MUST NOT be used without prior consultation with the Gas Supplier.

c) A gas meter can only be connected by the Gas Supplier or by their contractor.

d) An existing meter and/or pipe work should be of sufficient size to carry the maximum appliance input plus the demand of any other installed appliance. (BS 6891: 1988).

A minimum of 22 mm diameter pipe work is recommended within 1000 mm of the appliance gas cock.

e) **Natural gas appliances:** The governor at the meter must give a constant outlet pressure of 20 mbar (8 in.wg) when all appliances on the system are running.

Propane appliances: The regulator must give a constant outlet pressure of 37 mbar (14.9 in.wg) when all appliances on the system are running.

f) The gas supply line should be purged. WARNING: Before purging open all doors and windows, also extinguish any cigarettes, pipes, and any other naked lights.

g) The complete installation must be tested for gas tightness.

3.7 CENTRAL HEATING SYSTEM

a) The appliances incorporate all the components necessary to allow them to be connected to a sealed central heating system. Refer to Figure 7a for a typical system design, which incorporates radiators, and a drain facility that must be provided at the lowest point in the system to allow complete drain down.

b) The installation should be designed to operate with a flow temperature of up to 95 °C.

c) A sealed system must only be filled by a competent person.

d) The available pump head for the appliances are given in Figure 6.

e) If thermostatic radiator valves are fitted, a radiator must be fitted with two lock shield valves, to enable correct operation of the pump-overrun facility.

f) The following paragraphs outline the specifications of the items fitted to the appliances.

PUMP - The available pump head shown in Figure 6 is that in excess of the appliance hydraulic resistance, i.e. that available for the system.

6 AVAILABLE PUMP HEADS

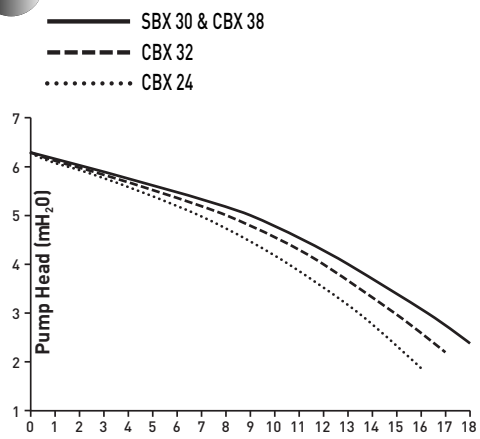

EXPANSION VESSEL - The integral expansion vessel is pre-charged to a pressure of between 0.5 and 1.0 bar. This should be checked before the water system is filled. Details below show the water system volume that is acceptable for this vessel. If the system water volume is larger then an additional vessel must be fitted to the system. BS 5449 and BS 6798 give further details regarding expansion vessel sizing and sealed systems.

Expansion Vessel Requirements

Vessel charge and initial system pressure	bar	0.5	0.75	1.0	1.5
Total water content of system using 8 L (1.54 gal) capacity expansion vessel supplied with appliance.	L	96	84	73	50
For systems having a larger capacity multiply the total system capacity in litres (gallons) by these factors to obtain the total minimum expansion vessel capacity required in litres.		0.0833	0.093	0.109	0.156

PRESSURE GAUGE - A pressure gauge is situated on the appliance control panel. This can be viewed by lowering the bottom front panel.

PRESSURE RELIEF VALVE - A pressure relief valve set to 3 bar (43.5 psi) is supplied with the appliance, however it will start to open at approximately 2.7 bar. It should not be used to flush the system.

FILLING LOOP

A filling loop is supplied loose with the appliance for connecting the mains water supply to the CH system so that the system can be filled on installation or whenever water pressure has been removed for system modifications, etc. The filling loop complies with the current water supply (water fittings) regulations.

Methods of filling a sealed system are shown in Figure 8.

WATER TREATMENT, CLEANSING AND FLUSHING THE HEATING SYSTEM

NOTE: British Standard BS7593: 1992 stresses the importance of cleansing and flushing of the system to ensure it continues to run efficiently with the minimum of maintenance necessary. Halstead Boilers fully support this professional approach and recommend that the system is cleansed with an effective chemical cleanser and protected long term with a suitable inhibitor. Such products are available from Fernox and Sentinal.

CONTROLS. As a minimum it is recommended that a room thermostat be installed to control the appliance. Thermostatic radiator valves may be fitted to the system, however they must not be fitted in the room where the room thermostat is fitted. There must be at least one radiator installed with lock shield valves that should not be closed. Further guidance can be obtained from the Domestic Heating and Hot Water Guide to the building regulations.

3.8 DOMESTIC HOT WATER SYSTEM (CBX APPLIANCES ONLY)

a) Check that the mains water pressure is sufficient (as stated in 2.2 "Performance Data") to produce the required DHW flow rate, but does not exceed the maximum DHW pressure (10 bar). If necessary, a pressure-reducing valve must be fitted to the mains supply before the DHW inlet connection.

b) The final 600 mm (24 in) of the mains supply pipe to the boiler must be copper.

c) Avoid long DHW pipe runs and several hot water draw off points.

d) Insulate the hot water pipes if accessible to minimise the heat losses within the pipes to keep the water hot longer.

e) A domestic hot water regulator is fitted within the appliance to control the maximum water flow rate. This may be removed to obtain higher flow rates. Higher flow rates will not damage the appliance but may reduce the water temperature below an acceptable level.

DOMESTIC HOT / COLD WATER SUPPLY TAPS AND MIXING TAPS.
All equipment designed for use at mains water pressure is suitable.

SHOWERS & BIDETS.
Any mains pressure shower or bidet complying with the Local Water Undertaking byelaws is suitable.

LED CODE 1 2 3 4	FAULT/EFFECT	REASON	ACTION
○○○●	Overheated appliance	Water temperature greater than 105 °C	● Check no air is in heat exchanger/CH system ● Check pump operation ● Check diverter valve operation ● Check PCB/X1C connector ● Check mains lead to pump ● Check flow thermistor
○○●○	No gas/No flame	Low gas pressure	● Check gas supply ● Check gas service cock ● Check gas valve and lead
○○●●	Lockout flame signal/ Lockout after 5 ignition	No flame signal on ignition, or loss of signal during operation attempts	● Check detection electrode/lead ● Check gas supply ● Check gas valve and lead ● Check PCB/X2A & X2B connectors ● Check spark generator/spark electrode ● Check mains earth lead continuity
○●○○	Flue gas sensor/ No flame	Flue gas temperature greater than 95 °C	● Check flue sensor ● Check flue system ● Check no air is in heat exchanger/CH system ● Check pump ● Check PCB/PCB connectors
○●○●	Defective sensor/ No flame	Defective flow, return or flue sensor	● Check flow, return and flue sensors ● Check wiring to sensors ● Check PCB/X6 & X8 connectors
○●●○	Defective gas valve/ Flame continues after demand ends	5 sec flame signal after burner is switched off	● Check gas valve and lead ● Check PCB
○●●●	Defective fan/No flame	Missing or Erroneous RPM signal	● Check fan ● Check mains fan lead & connector ● Check low voltage fan lead & connector ● Check PCB/X3 connector ● Check pump operation ● Check diverter valve operation
●○○○	CRC error/No flame	Internal Eprom data error	● Check PCB
●○○●	Error in power supply/ No flame	Low mains voltage	● Check mains voltage ● Check PCB connectors
●○●○	Water flow failure/ Flame for a short period only	Sensor temperature differential incorrect	● Check water pressure ● Check pump ● Check no air is in heat exchanger/CH system ● Check flow, and return sensors ● Check wires to sensors not crossed
●○●●	PCB error/No flame	Internal error	● Check PCB
●●○○	BCC error/No flame	Incorrect /missing BCC	● Reseat or replace BCC
●●○●	Differential check faulty/ Flame for 15 seconds	Zero check faulty DHW or CH	● Check flow, and return sensors ● Check wires to sensors not crossed ● Check PCB
●●●○	Activate BCC/No flame	New BCC	● Press reset to activate
●●●●	Safety system failure/ No flame	Failure of internal self checking system	● Check PCB
○○○○	DHW cold	Defective DHW turbine or Diverter valve	● Check DHW turbine & lead ● Check Diverter valve & lead ● Check PCB/X4 connector ● Check filter in plate heat exchanger
○○○○	No light indication	Defective power supply	● Check power supply ● Check PCB/X1B connector ● Check PCB fuse
○○○○	No flame	Faulty connector	● Check PCB/X1A connector

8 FAULT FINDING

8.1 GENERAL

Before looking for a fault condition, check that:

- The mains electrical supply is turned on.
- The clock, room or cylinder/tank thermostat (where fitted) are calling for heat.
- The gas service cock is open.
- The CH and DHW isolation cocks are open.
- The system is at design pressure.

Before attempting any electrical fault finding, always conduct the preliminary electrical system checks as described in the Instructions for the British Gas Multimeter, or other similar instrument.

On completion of any service or fault finding operation involving making or breaking electrical connections, always check for EARTH CONTINUITY, POLARITY and RESISTANCE TO EARTH.

Detailed procedures for replacing faulty components are described in section 9 (Parts Replacement).

For further information contact: Halstead Boilers Ltd. Service Help line: 0844 371 1111.

8.2 DIAGNOSTIC LED INDICATORS

FASCIA PANEL, Figure 30

The **Reset** LED shows steady RED in a lockout condition and the error code will be displayed by the 4 yellow lights above the two control knobs.

For fault finding, refer to the diagnostic chart shown below, together with the notes given in sections 8.3, 8.4 and 8.5.

Depending on the fault condition, the boiler can be reset by pressing the RED **Reset** light.

8.3 FAULT FINDING CODES

In the event of the appliance failing to light, refer to the Diagnostics Chart.

30 FASCIA PANEL

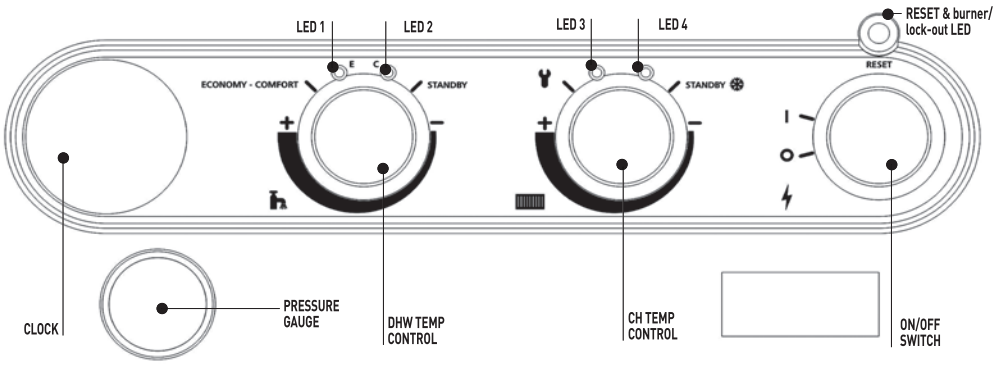

8.4 DOMESTIC HOT WATER FAULT FINDING (CBX APPLIANCES ONLY)

When the hot water tap is turned on, the control should perform a series of checks followed by an ignition sequence. Refer to section 5.2.

If the control has powered up correctly but does not respond to a DHW demand, check the following:

a) Check that the DHW flow rate at the tap is greater than 2.5 litre/minute.

b) Check the operation of the DHW flow turbine, Figure 28.

c) Check the wires to the DHW flow turbine.

d) Check connector X8 is correctly connected to the PCB.

If the above items are ok, replace the PCB.

If DHW temperature fluctuates heavily during a long draw off, check the secondary plate heat exchanger filter for debris, clean and replace, (refer to section 9.19).

8.5 CENTRAL HEATING FAULT FINDING

Upon a demand for Central Heating, (closure of the time switch and room thermostat, where fitted), the controls should carry out a set of start up checks, followed by an ignition sequence. Refer to Section 5.2.

If the control has powered up correctly but does not respond to a CH demand. Check voltage between pin 2 connector X1A (orange wire) and pin 2 connector X1B (blue wire). If 0 V ac, check room thermostat and clock. If 230 V ac, check control for lockout or blocking codes, (refer to section 8.3), check operation of the pump.

Note: Whenever a CH demand is removed, either by the timer, the room thermostat or by the appliance's internal temperature control, an anti cycle mode is initiated which prevents the appliance from firing in CH mode for 5 minutes. Ensure that the control is not in this mode by removing power from the control and restoring it after a delay of 10 seconds.

If room thermostat and clock are OK and no lockout or blocking code exists and the control is not in anti cycle mode, then replace PCB.

7a TYPICAL SYSTEM DESIGN FOR EDEN CBX

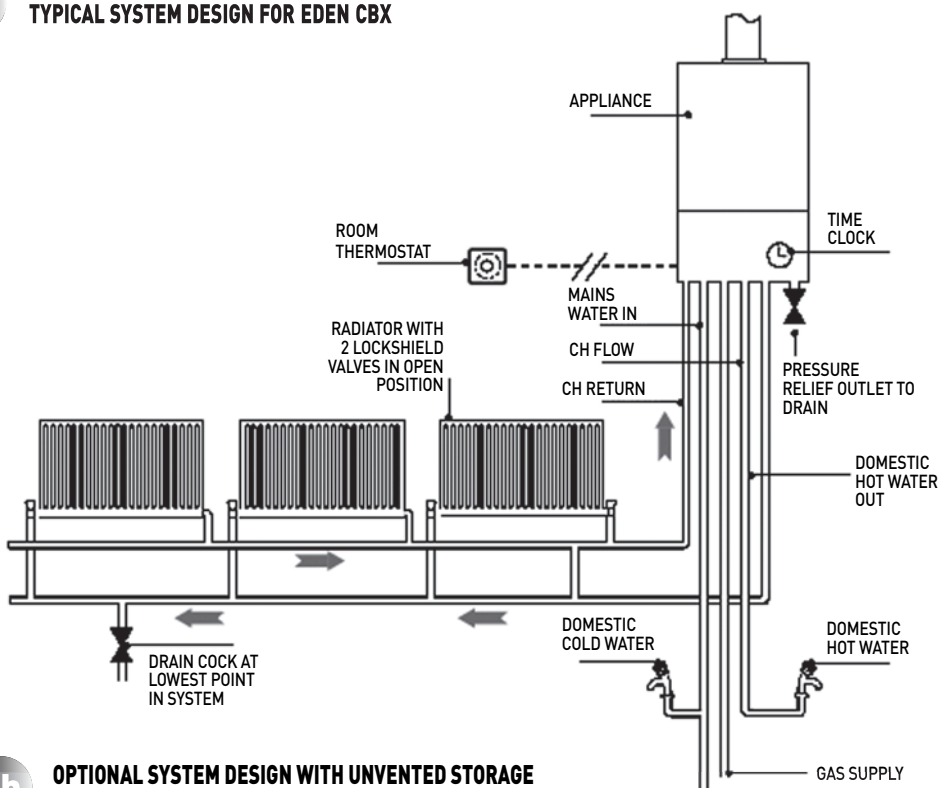

7b OPTIONAL SYSTEM DESIGN WITH UNVENTED STORAGE CYLINDER FOR EDEN SBX

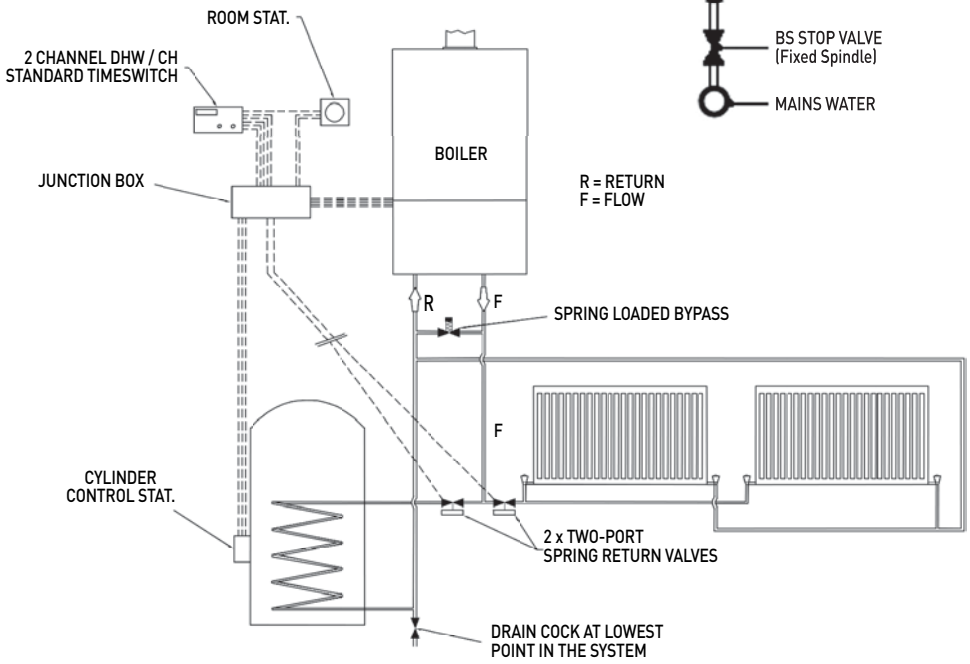

NOTE (CBX circuit): No automatic by-pass required. However it is recommended to leave one radiator open to ensure pump over-run function. It is also recommended to fit TRV's on all radiators except in rooms with a room thermostat

NOTE (SBX circuit): For detailed system designs see the seperate booklet supplied with the boiler.

For information please contact Halstead Boilers Technical Helpline: 0844 371 1111

3.9 ELECTRICITY SUPPLY

a) Wiring external to the appliance must be in accordance with the current I.E.E Wiring regulations (BS 7671) for electrical installation and any local regulations, which apply.

b) The mains cable must be at least 0.75 mm2 (24/0.2 mm) PVC insulated to BS 6500 table 16.

c) **THIS APPLIANCE MUST BE EARTHED.** Failure to provide a satisfactory earth connection will result in appliance malfunction.

d) The method of connection to the mains supply must facilitate complete electrical isolation of the appliance. Either a 3A fused three pin plug and un-switched shuttered socket outlet, both complying with BS 1363, or a 3A fused double pole switch having a 3 mm contact separation in both poles and serving only the boiler (and its external controls) may be used.

3.10 EXTERNAL CONTROLS

The CBX appliances may be used with any certified mains voltage room thermostat, and the SBX appliances with any certified programmer/room thermostat, as described in section 4. A low voltage DHW cylinder / tank sensor is available as a kit, for use with SBX appliances.

For further information contact: Halstead Boilers Ltd, Service Helpline: 0844 371 1111.

8 ALTERNATIVE METHODS OF FILLING A SEALED SYSTEM

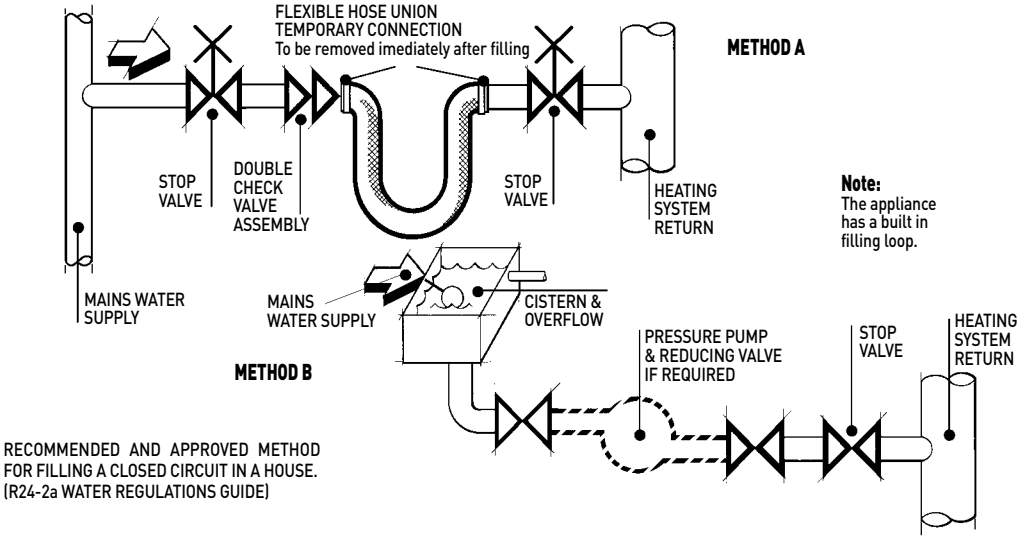

RECOMMENDED AND APPROVED METHOD FOR FILLING A CLOSED CIRCUIT IN A HOUSE. (R24-2a WATER REGULATIONS GUIDE)

7 INTERNAL WIRING DIAGRAMS

29

7.1 FUNCTIONAL FLOW WIRING DIAGRAM

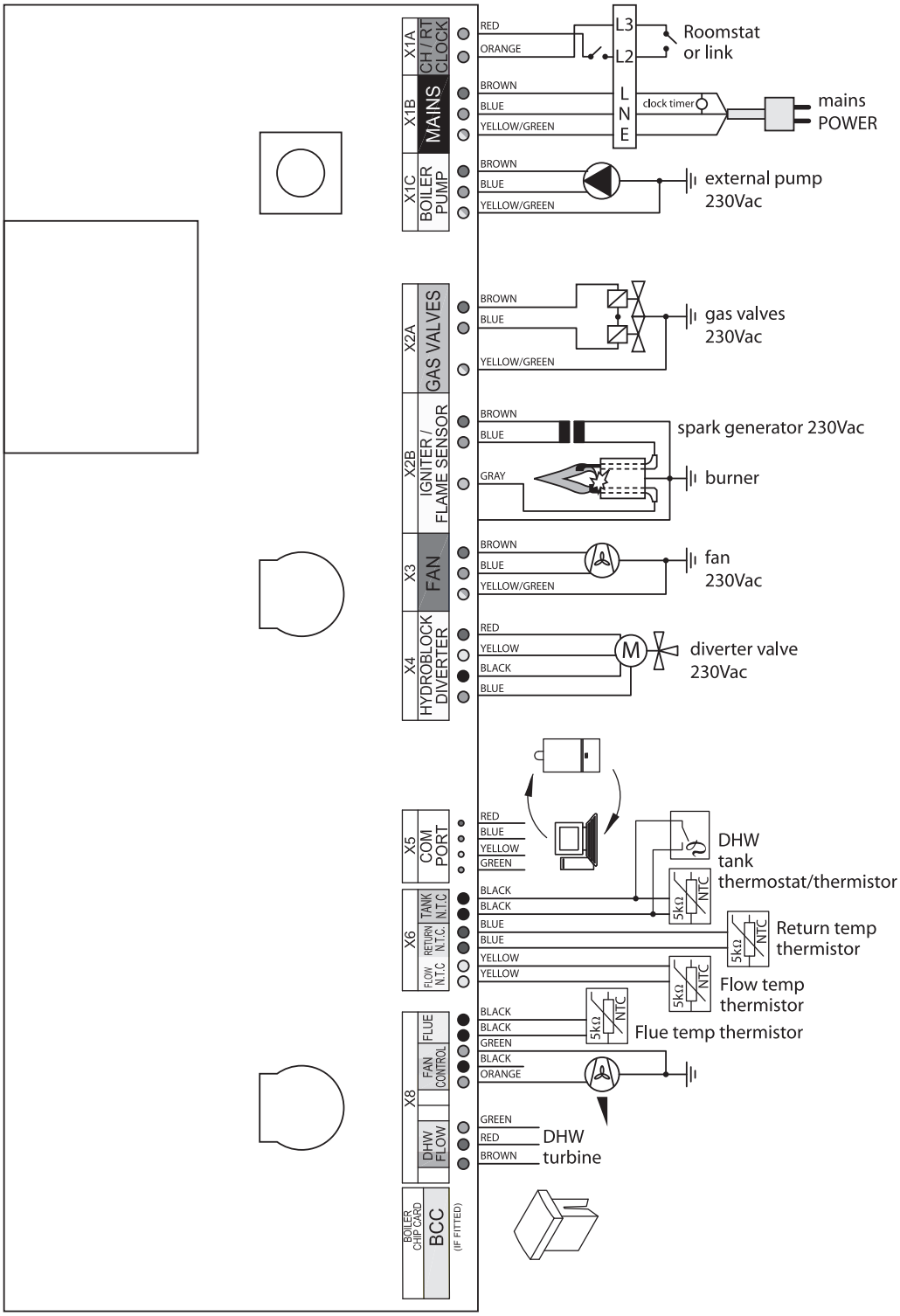

27 CONDENSATE DRAIN

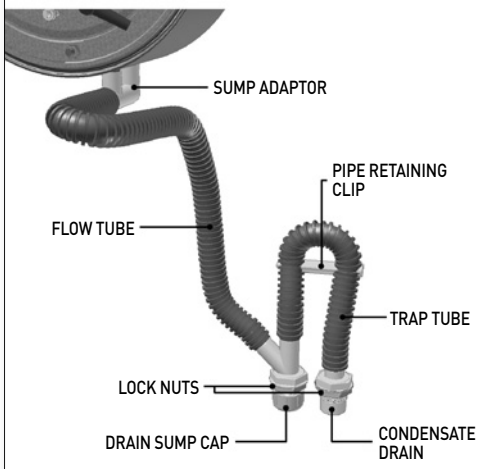

28

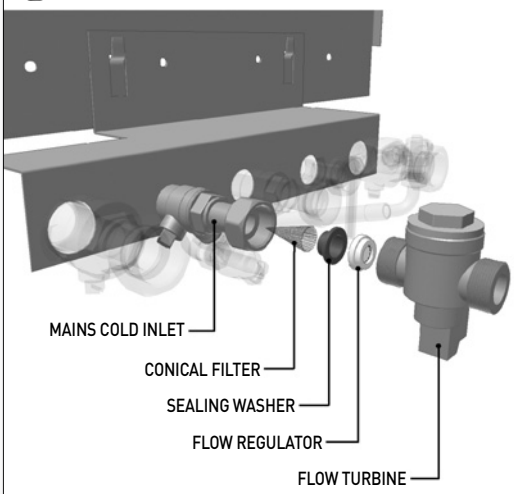

6.8 SEALED WATER SYSTEM

a) Check the operation of the pressure relief valve as described in section 5.1.

b) Check the correct operation of the pressure gauge by noting the reading when cold and check that the pressure increases with temperature. Replace the gauge if readings are suspect.

c) Check that the system is at its original (cold) design pressure. If necessary, re-pressurise the system as described in section 5.1 and search for and rectify any leaks causing loss of water.

d) In case of heavy pressure fluctuations during the heat and cool down cycle, check the pre-charge pressure of the expansion vessel. If the air pressure is less than 0.75 bar recharge vessel with an air pump.

6.9 RE-ASSEMBLY & RE-COMMISSIONING

a) Re-assemble all components in reverse order.

b) Check that all joints and seals are correctly fitted.

c) Turn on the gas and electricity supply and light the appliance, as described in section 5.2.

d) Re-perform a combustion check, as described in section 6.1.

e) Check the operation of the appliance in both CH and DHW modes as applicable.

f) Remove the manometer and tighten the inlet pressure test point sealing screw.

g) Test for gas tightness.

6.10 FINAL CHECKS

a) Ensure the fascia panel into the upright position and secure with the two screws.

b) Re-fit the front casing panel.

c) Return all appliance and external controls (if fitted) to their original settings.

4 APPLIANCE INSTALLATION

Before installing the appliance, check that the chosen location is suitable (section 3.2) and that the requirements for flue position (section 3.3) and minimum clearances (Figure 1b) are satisfied.

4.1 UNPACKING THE APPLIANCE

The appliance is supplied in one box. Flue kits are provided separately, the various flue kits available as described in sections 2.5 - 2.7. If the appliance is to be installed without access to an external wall, a wall liner kit is also required.

Unpack the boxes and check the contents:

- Complete appliance
- Paper wall mounting template
- Wall mounting plate
- Plumbing jig
- Installation and Servicing Instruction
- User's Instructions
- Benchmark book
- Hardware pack containing:

  50 mm x No 10 wood screws - 4 off
  Wall plugs - 4 off
  22 mm copper street elbows -
  2 off (3 off SBX appliance)

Manual Handling Note:
During the appliance installation it will be necessary to employ caution and assistance whilst lifting, as the appliance exceeds the recommended weight for a one-man lift. Take care to avoid trip hazards, slippery or wet surfaces.

4.2 PREPARING THE WALL

a) Fix the paper template in the required position (ensuring that the necessary clearances are achieved). Ensure squareness by hanging a plumb line.

b) Mark the position of the wall mounting plate-fixing holes (4). Select one from each group. Refer to Figure 10.

c) Mark the position of the flue outlet. For side flue installation extend the flue centre line on to the sidewall, where the flue length exceeds 775 mm, a flue slope angle of 2.5° needs to be taken into account. Refer to Figure 10. Remove the paper template.

d) Cut the hole in the wall for the air/flue duct (preferably with a core-boring tool). The hole must be horizontal and not be less than 100 mm in diameter. If the hole is not accessible from outside, its minimum diameter must be sufficient to allow insertion of the wall liner (130 mm, 5in). The wall liner is available as an optional extra and must be sealed in position with mortar (or equivalent).

e) Drill the four fixing holes using a 6mm drill and insert the wall plugs provided.

f) Hang the wall mounting plate using two fixing screws in the top, ensuring that it is level. Hook the plumbing jig onto the two bottom locating tabs of the wall mounting plate. Refer to Figure 9.

g) Enter the bottom two fixing screws into the wall plugs and tighten up all four screws.

If required, service connections may be made now before mounting the appliance - Refer to section 5.

Pipe work may be routed from above or below the appliance as required.

9

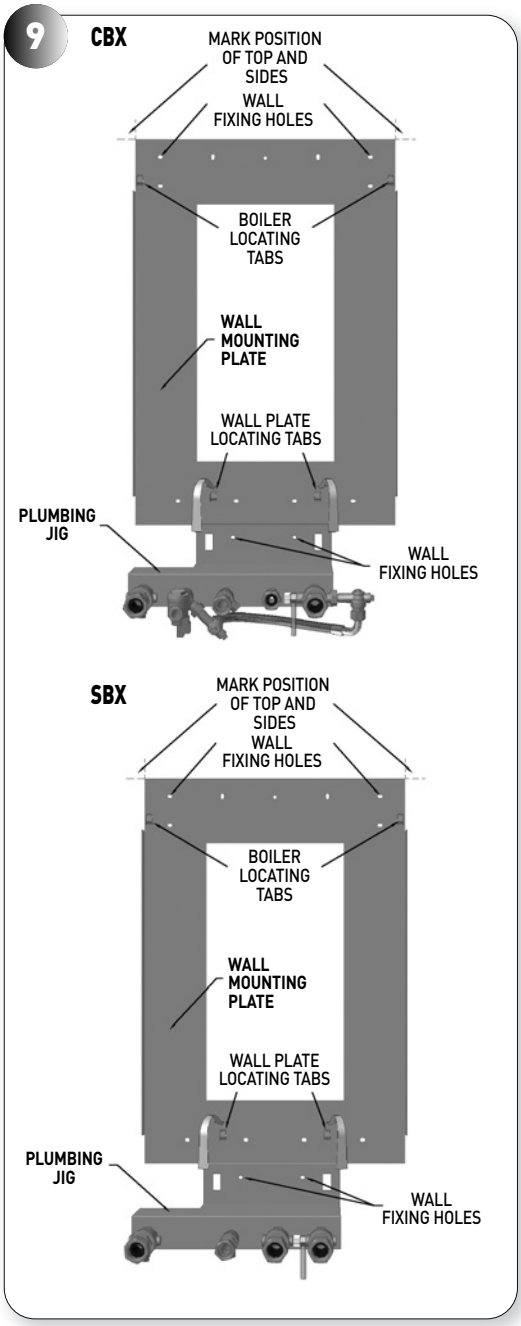

10

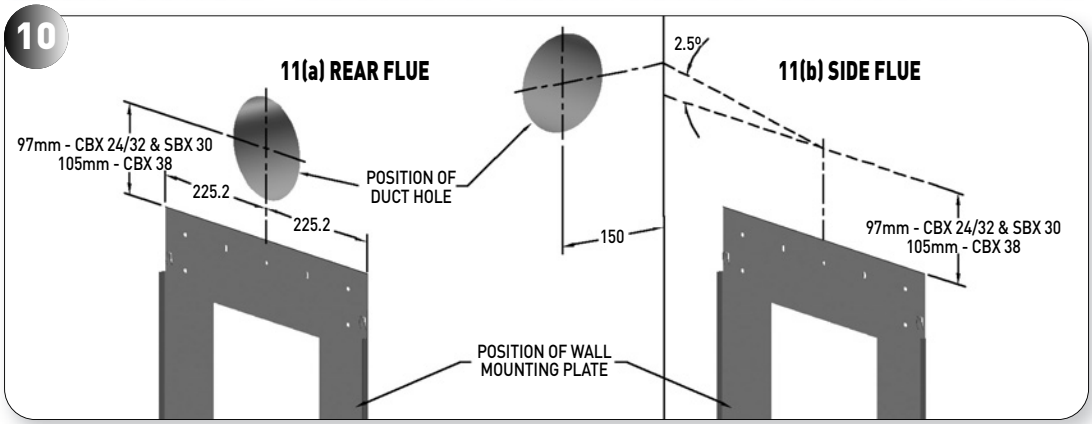

4.3 MOUNTING THE APPLIANCE

Refer to Figure 11

a) Lift the appliance into position approximately 10 mm above the top of the wall mounting plate and use the side wings on the plate to locate the appliance horizontally. Then carefully lower the appliance, ensuring that the top locating tabs are securely engaged.

b) Connect the central heating system pipes to the central heating flow and return pipes on the boiler.

Pipe work may be routed from above or below the appliance as required.

4.4 CENTRAL HEATING & DOMESTIC HOT WATER SERVICE CONNECTIONS

Refer to Figure 12

Commission the central heating system and domestic hot water system, for CBX appliances as described in section 5.1, and then proceed to Section 4.5.

11 MOUNTING THE APPLIANCE

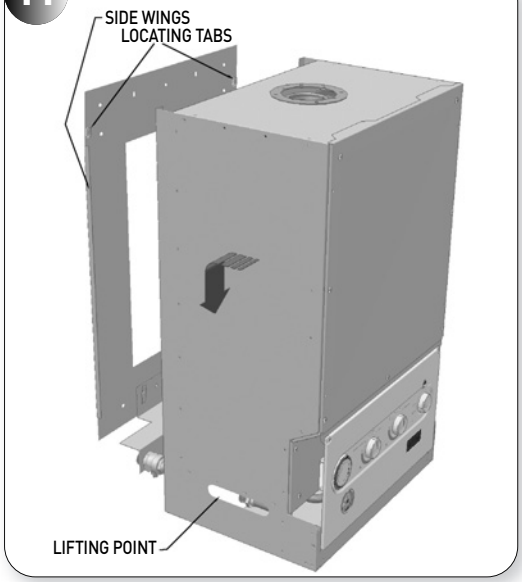

12a CBX SERVICE CONNECTIONS

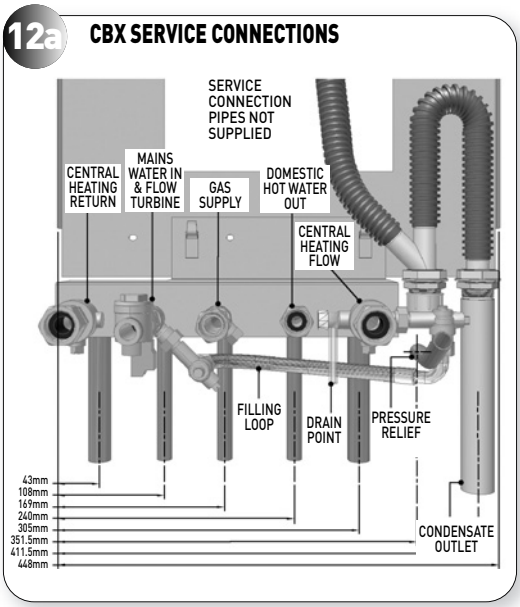

12b SBX SERVICE CONNECTIONS

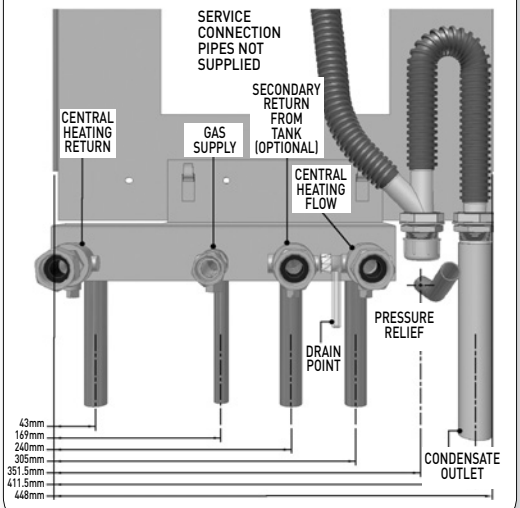

6.5 COMBUSTION CHAMBER & HEAT EXCHANGER

Inspect the inside of the combustion chamber for debris. If necessary, clean the inside of the tubes with a soft brush. Do not brush the insulation at the rear, check the integrity of the combustion chamber insulation panels, if damaged they will require replacement.

6.6 CONDENSATE DRAIN

The condensate Drain has a removable cap, Figure 27, which allows the removal of debris that may be caught within it. Place a bowl under the cap to catch the condensate and remove the cap. Any debris inside will be expelled at this point. Replace the cap ensuring a good seal is made. Discard the condensate and debris.

6.7 DOMESTIC COLD WATER INLET FILTER (CBX APPLIANCES ONLY)

Close the water inlet isolating cock, open a domestic hot water tap at the lowest point in the system and allow the pressure to dissipate. Close this tap again. Undo the nut holding DHW turbine to the water inlet isolating cock. The filter inside the isolating cock can now be carefully removed, and cleaned as necessary by flushing with water. Re-assemble in reverse order, ensuring all seals are replaced correctly. Refer to Figure 28.

26 26A SPARK ELECTRODE

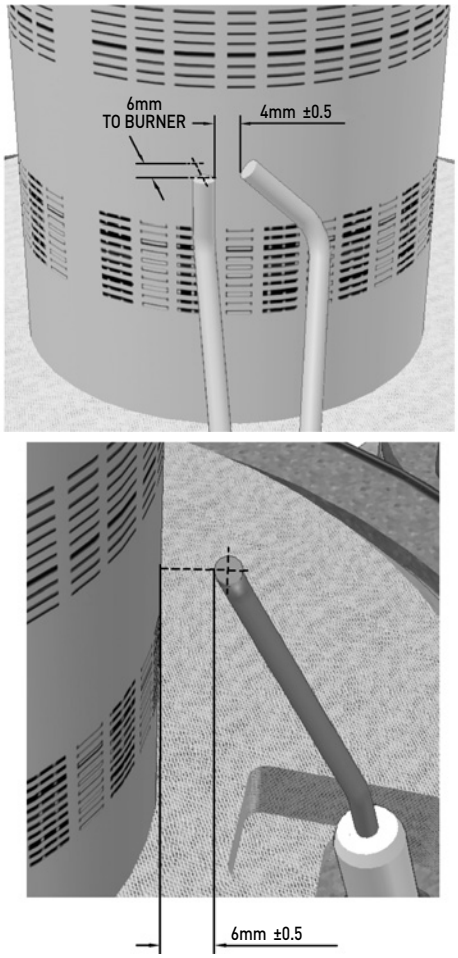

25 GAS CONTROL VALVE, FAN & BURNER ASSEMBLY

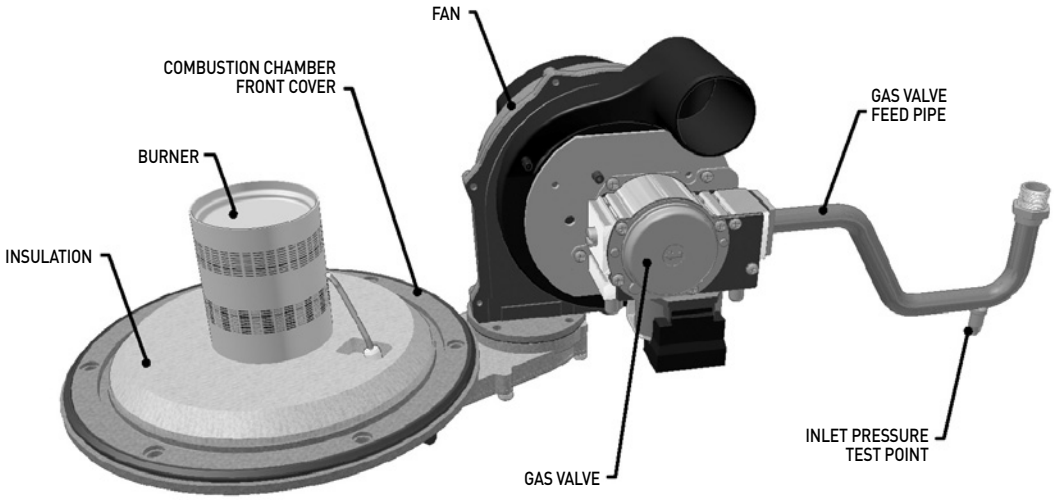

24 CBX

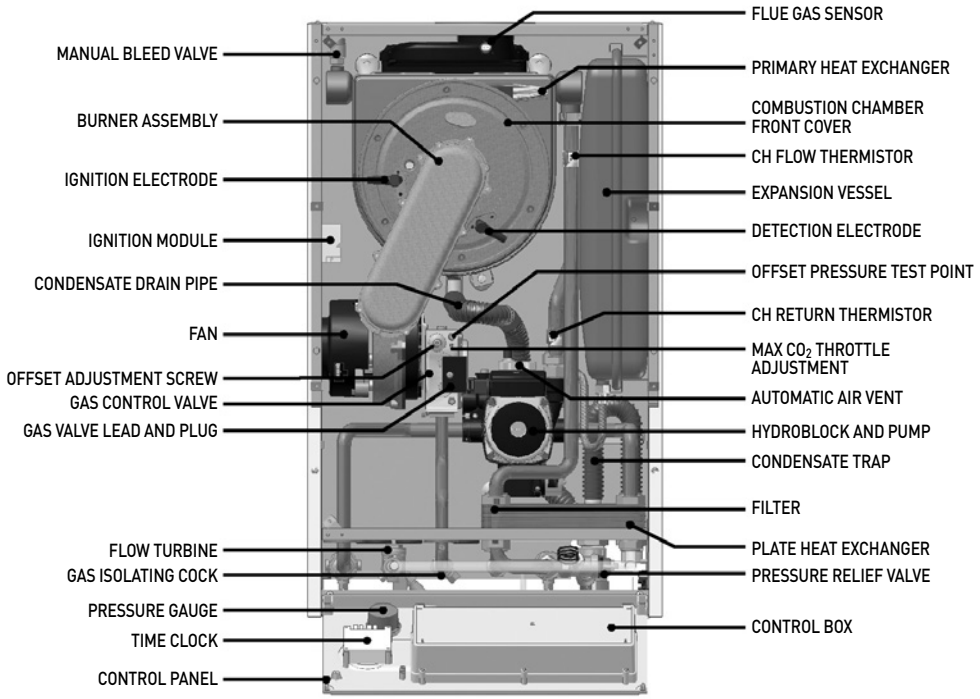
MANUAL BLEED VALVE
BURNER ASSEMBLY
IGNITION ELECTRODE
IGNITION MODULE
CONDENSATE DRAIN PIPE
FAN
OFFSET ADJUSTMENT SCREW
GAS CONTROL VALVE
GAS VALVE LEAD AND PLUG
FLOW TURBINE
GAS ISOLATING COCK
PRESSURE GAUGE
TIME CLOCK
CONTROL PANEL
FLUE GAS SENSOR
PRIMARY HEAT EXCHANGER
COMBUSTION CHAMBER FRONT COVER
CH FLOW THERMISTOR
EXPANSION VESSEL
DETECTION ELECTRODE
OFFSET PRESSURE TEST POINT
CH RETURN THERMISTOR
MAX CO_2 THROTTLE ADJUSTMENT
AUTOMATIC AIR VENT
HYDROBLOCK AND PUMP
CONDENSATE TRAP
FILTER
PLATE HEAT EXCHANGER
PRESSURE RELIEF VALVE
CONTROL BOX

SBX

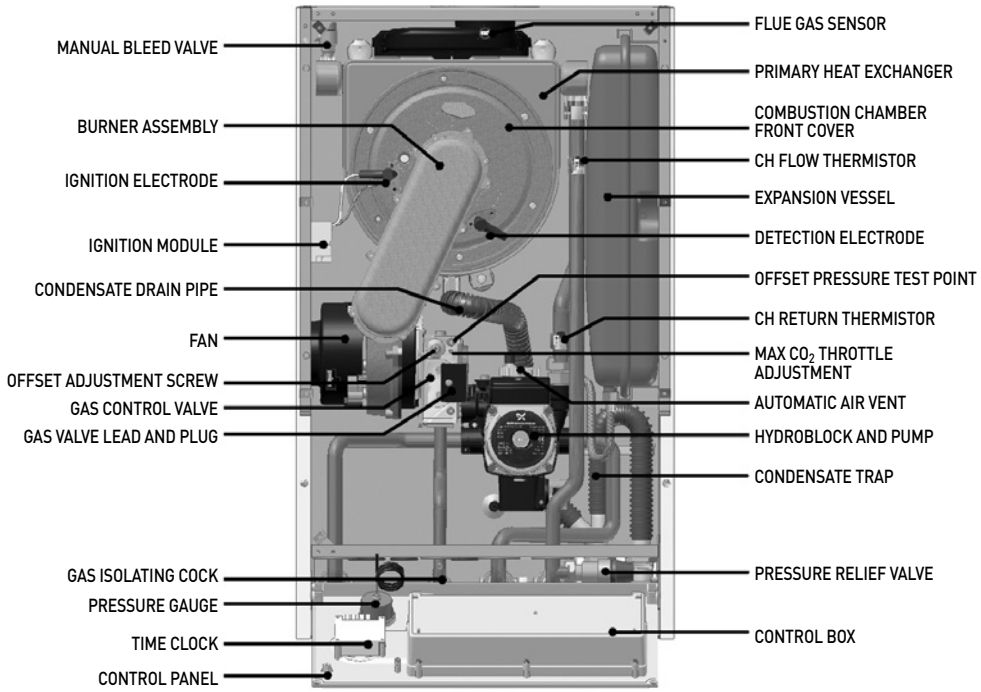
MANUAL BLEED VALVE
BURNER ASSEMBLY
IGNITION ELECTRODE
IGNITION MODULE
CONDENSATE DRAIN PIPE
FAN
OFFSET ADJUSTMENT SCREW
GAS CONTROL VALVE
GAS VALVE LEAD AND PLUG
GAS ISOLATING COCK
PRESSURE GAUGE
TIME CLOCK
CONTROL PANEL
FLUE GAS SENSOR
PRIMARY HEAT EXCHANGER
COMBUSTION CHAMBER FRONT COVER
CH FLOW THERMISTOR
EXPANSION VESSEL
DETECTION ELECTRODE
OFFSET PRESSURE TEST POINT
CH RETURN THERMISTOR
MAX CO_2 THROTTLE ADJUSTMENT
AUTOMATIC AIR VENT
HYDROBLOCK AND PUMP
CONDENSATE TRAP
PRESSURE RELIEF VALVE
CONTROL BOX

4.5 GAS CONNECTION

Refer to Figure 12

Connect the gas supply pipe to the gas service cock. It is recommended that a minimum of 22 mm diameter OD copper pipe be used to within 1000 mm of the gas service cock.
For full rate, operate CBX appliances in DHW mode.

13 CONDENSATE CONNECTIONS

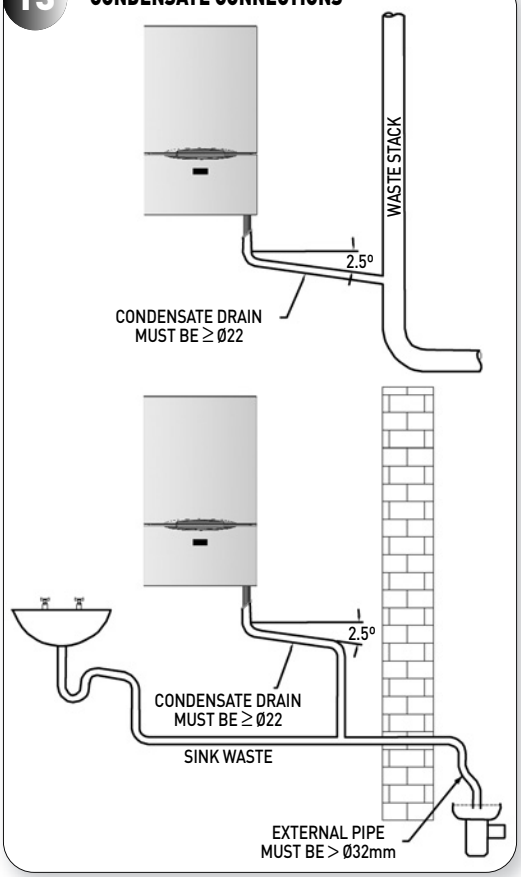

4.6 CONDENSATE CONNECTION

Refer to Figure 13

Connect preferably a 22 mm plastic push fit or adhesive overflow pipe to the condensate outlet. It should be piped to drain, preferably within the building, maintaining a continuous 2° fall away from the appliance. Note; if an additional "U" trap is fitted between the appliance and the discharge point, then a visible air break is necessary between the appliance and trap, because a trap is already provided within the appliance. 32 mm pipe should be used for external pipe work, or if the appliance is installed in a garage. If the drain is routed externally to a drain or soak away, then the external length should be kept as short as possible and not exceed 3000 mm. Protection from freezing in cold weather conditions is also advisable. Ensure that the condensate discharge system complies with any local regulations in force.

In exceptional circumstances, such as when a boiler is installed in a basement without drainage, it may be necessary to install a condensate pump to carry condensate up to ground/drain level. Such products are available from Grundfos Pumps Ltd on: 01525 850000 and Pump House on: 0115 922 2211.

4.7 PRESSURE RELIEF VALVE CONNECTION

The safety valve is located at the bottom RHS of the appliance. Connect the copper tail provided, to the safety valve outlet, and then connect a discharge pipe of not less than 15 mm diameter copper to the tail. The pipe should be positioned so that the discharge of water or steam can be noticed, but cannot create a hazard to the occupants of the premises or damage electrical components or wiring.

4.8 AIR/FLUE DUCT INSTALLATION

For correct flue installation please refer to the installation instructions that are provided with the individual flue kit as described in sections 2.5 - 2.7.

a) Measure the required flue length as shown in Figure 14. Refer to section 2.5 to determine whether any extension kits are required. Installations using only the standard ducts or standard ducts with straight extensions are described in this section. Installation instructions for all other flue systems are included in the various flue kits.

b) Ensure that all (inner and outer tube) sealing rings are provided and assemble the air/flue ducts as shown in the flue instructions.

c) Construct the correct flue length by building the flue out from the appliance.

Ensure that the flue and air seals are correctly fitted before assembly and that each section is fully engaged.

The flue length is measured from the centreline of the appliance flue outlet to the inside of the external wall-sealing ring. In most cases it will be possible to achieve the required flue length without cutting the ducts, however where necessary the plain ends of the extension ducts may be cut. Never cut the swaged end, and always ensure that the cut is square and free of burrs or debris.

NOTE IT IS ESSENTIAL THAT THE TERMINAL IS FITTED THE CORRECT WAY UP
See flue kit Instructions (i.e. rain shield at the top).

14 MEASURING THE EXACT FLUE LENGTH

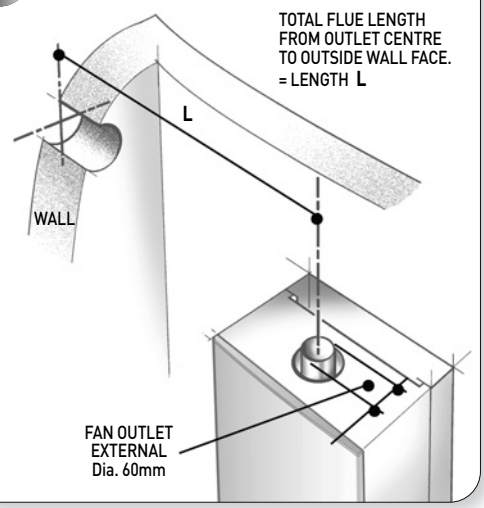

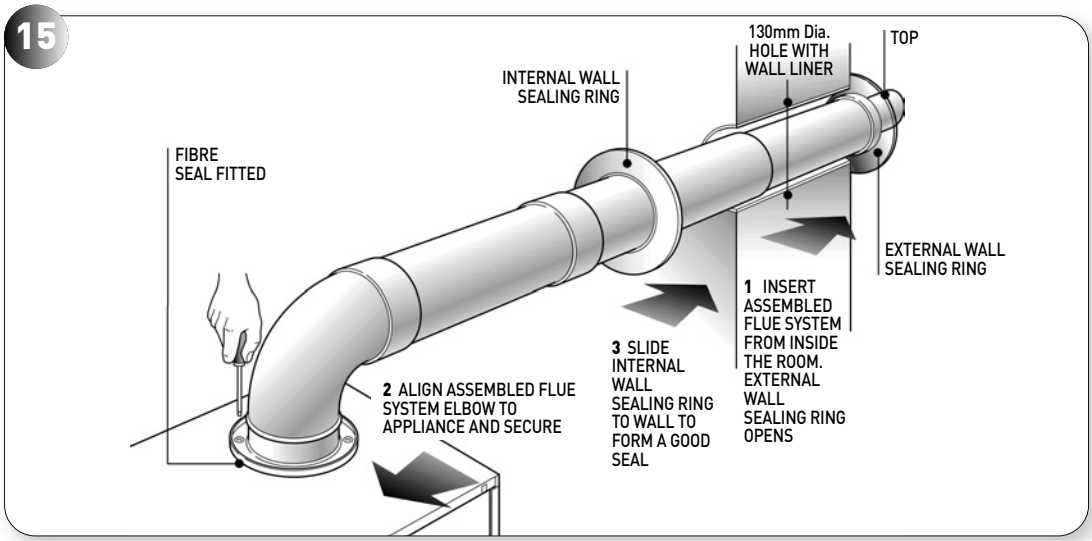

4.8.1 INSTALLING THE AIR/FLUE DUCT FROM INSIDE THE ROOM

Wall thickness up to 800 mm (31in) only.

a) Push the terminal through the wall liner taking care to ensure that the terminal is the correct way round and the external wall-sealing ring does not become dislodged.

b) Assemble the flue system extension ducts as necessary, referring to Figure 15.

c) Pull the flue system towards the appliance to seat the external sealing ring against the outside wall, ensuring that the duct joints are not disturbed.

d) Use the internal sealing ring to make good the internal hole, and check that the terminal is correctly located on the outside wall (Where possible this should be visually checked from outside the building.) Figure 16 shows a view of the flue system, correctly installed.

e) Finally locate and secure the elbow to the appliance using the four screws provided.

4.8.2 INSTALLING THE AIR/FLUE DUCT FROM OUTSIDE THE ROOM

(Flue hole diameter 100 mm - wall liner not necessary)

a) Secure the flue elbow with seal to the appliance using 4 screws.

b) Fit external wall sealing ring over flue and then from outside the building, push the flue system through the wall taking care to ensure that the terminal is the correct way around.

c) Loosely fit the internal wall sealing ring over the inside end of the flue.

d) Assemble the flue system extension ducts as necessary, referring to the flue kit instructions, and fit to the flue elbow.

e) Fit the flue terminal to the flue system, ensuring that the duct joints are not disturbed, and that the external sealing ring is seated against the outside wall.

f) Finally use the internal sealing ring to make good the internal hole. Check that the external wall sealing ring and the terminal is correctly located, on the outside wall from outside the building.

4.9 ELECTRICAL CONNECTIONS

Connect the electricity supply and external controls (using suitable mains cable) as follows:

Wire the cable(s) into the appropriate connections in the electrical plug provided, referring to Figure 16. Live supply to L1, Neutral and Earth as indicated. Check that L2 and L3 are linked.

To provide correct cable retention, fit the piece of tubing supplied over the cable as it passes through the clamping arrangement. The cable will be held in position as the plug cover is fitted.

If a programmer/room thermostat is to be fitted remove the red link between L2 and L3 and connect the device across these terminals. Any external controls fitted must be rated at 230V 50Hz and have volt free contacts.

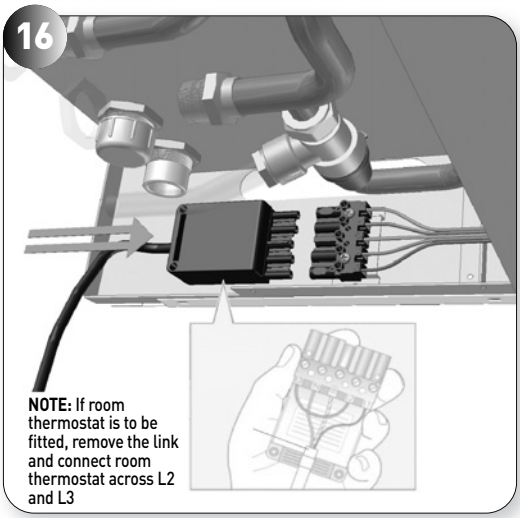

4.10 OPTIONAL CYLINDER/TANK TEMPERATURE SENSOR (SBX APPLIANCES ONLY)

If this sensor kit is used, refer to the separate kit for instructions for installation and wiring details.

6 ROUTINE SERVICING

To ensure continued efficient operation of the appliance, it is recommended that it is checked and serviced as necessary at regular intervals. The frequency of servicing will depend upon the particular installation conditions and usage, but in general once a year should be adequate. It is the law that a competent person, such as British Gas or other CORGI registered personnel, must carry out any service work.

Service the appliance by following the full procedure detailed below:

6.1 COMBUSTION CHECK

The appliance incorporates a flue sampling point on the appliance flue elbow, or appliance vertical flue adaptor. If the service engineer has suitable equipment to analyse the flue gas, the plastic cap may be removed and a 6 mm inside diameter sample tube fitted. For CBX appliances operate in DHW mode, at full rate, for SBX appliances operate the appliance in Service mode, (see section 5.2). After ten minutes operation check the CO_2 /CO values and compare with those figures stated in section 2.3. Do not forget to replace the cap after use.

When the appliance is operating at maximum output check that the gas supply pressure is 20.0 mbar, using the inlet pressure test point located on the gas supply pipe.

Before commencing any service operation, ISOLATE the mains electrical supply, and TURN OFF the gas supply at the main service cock.

6.2 GAS CONTROL VALVE, FAN & BURNER ASSEMBLY

Refer to Figures 22, 23, 24, and 25

a) Remove the casing front panel, pulls off.

b) Lower the controls panel (2 screws).

c) Remove the sealed chamber front panels (11 screws).

d) Disconnect the igniter plug, earth lead and detection plug from the igniter and detection electrodes.

e) Unscrew the screw holding the gas valve lead plug, and disconnect the plug.

f) Disconnect the electrical leads from the fan (2 plugs).

g) Undo the nut holding the gas valve feed pipe to the gas isolating cock, and disconnect.

h) Disengage the gas valve feed pipe grommet from the casing by pushing it up.

i) Remove the 6 nuts holding the combustion chamber front cover in place.

j) Remove the gas control valve, fan & burner assembly, by carefully pulling forward the combustion chamber front and rotating the assembly anticlockwise so that the burner points forward, then disengage the gas valve feed pipe from the casing, by lifting up the assembly. Take care not to damage the insulation.

k) The assembly may then be inspected.

l) Re-assemble in reverse order.

6.3 BURNER

Inspect, and if necessary clean the main burner ports using a soft brush or vacuum cleaner. Do not use a wire brush or any abrasive material.

6.4 IGNITION & DETECTION ELECTRODES

a) Inspect the ignition and detection electrodes in situ. If necessary, clean using a soft brush. If either the electrode or the ceramic insulation shows signs of damage or wear, replace the electrode(s) and their gasket.

b) Check that the alignments of the ignition and detection electrodes are correct. Refer to Figure 26. Adjust by carefully bending the tip of the electrode rod whilst supporting the base of the rod. Do not put any pressure on the ceramic insulation.

22 CONTROL PANEL

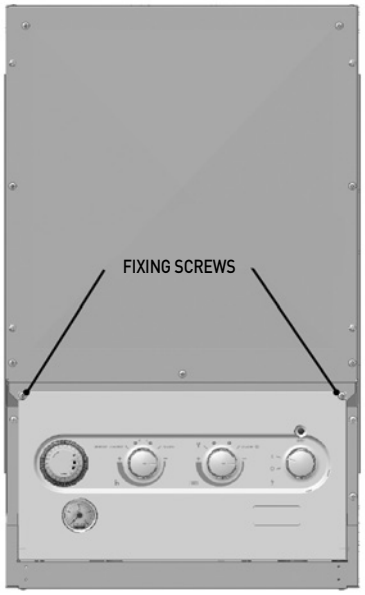

23 COMBUSTION CASE PANELS

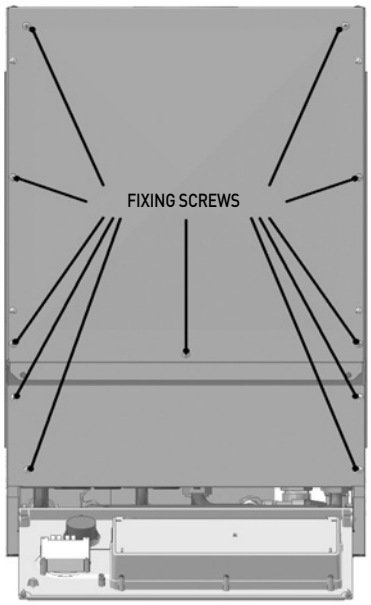

5.8 OTHER FEATURES

The following additional features are included in the appliance specification:

ANTI-CYCLE DEVICE:
When the appliance cycles on its central heating control thermostat, a slow cycle device operates. The timer (set to 5 minutes) is activated after the end of each burn cycle to prevent rapid cycling of the burner.

ANTI PUMP SEIZURE DEVICE:
Providing that a power supply is maintained and the appliance ON/OFF switch is ON, the pump will operate for at least 20 seconds in every 23 hours (regardless of heat demand) to prevent pump seizure during periods where the appliance is not used.

CH SOFT START DEVICE:
After every burner start, in CH mode, the burner output stays at low for 3 minutes, to ensure smooth heat up of the system and maximum efficiency.

DHW PRE-HEAT: (CBX appliances only)
DHW **Comfort** selected: With no demand for DHW the appliance will fire periodically for a few seconds to maintain the DHW plate heat exchanger in a heated condition. This feature will automatically adjust to the user's habitual requirements. Thus during long periods of no DHW draw-off, e.g. overnight, no pre-heat is provided. With DHW **Economy** selected, no pre-heat is provided.

KEEP-HOT FACILITY (EDEN CBX appliances only)
This feature is designed to provide hot water very quickly without wasting too much water. Therefore you may notice that after EVERY hot water draw-off the burner may stay on for a short period of a few seconds. This is to pre-heat the hot water circuit and prepare the appliance for the next hot water draw-off.

This feature applies in both the 'Comfort' and 'Economy' modes.

OPTIONAL - HOT WATER DELAY PERIOD (EDEN CBX appliances only)
After every hot water draw-off the appliance may stay in this mode for a few minutes, (if selected), even though a central heating demand is present (LED 3 & 4, as shown in the user manual, will be off during this period). This feature reduces the hot water outlet temperature fluctuations between draw-offs. This feature is particularly handy when having a shower.

In households with many hot water taps or larger families this feature could cause some unwanted delays in providing central heating. To override the few minute delay, briefly turn the CH control knob or room thermostat (if fitted) and the appliance will change over to CH almost immediately, (at least 1 minute after last burner cycle).

SERVICE MODE:
The appliance enters the SERVICE mode by turning the control knob to 'SERVICE' (full clockwise). The two LED's above the knob are now flashing. In this mode the appliance runs at the minimum CH output. This mode allows the gas valve offset and CO_2 emissions to be measured.

5.9 USER INSTRUCTIONS

Upon completion of commissioning and testing the system, the installer must instruct the user in how to operate the appliance by drawing the user's attention to the following.

a) Give the 'Users Instructions' to the householder and emphasise their responsibilities under the 'Gas Safety (Installation and Use) Regulations or rules in force.

b) Explain and demonstrate the lighting and shutdown procedures.

c) Advise the householder on the efficient use of the system, including the use and adjustment of all system controls for both CH and DHW.

d) Advise the user of the precautions necessary to prevent damage to the system, and to the building, in the event of the system remaining inoperative during frost conditions.

e) Explain the function of the Reset button, and how to reset the appliance. Emphasise that if cutouts persists, the appliance should be turned off and the installer or service engineer consulted.

f) Stress the importance of an annual service by a registered heating engineer.

g) The electrical mains supply to the appliance must remain ON and the ON/OFF switch must be left ON for the frost protection circuit to operate.

5.10 APPLIANCE LOG BOOK

A logbook is supplied with this appliance to record installation and commissioning details and to make future servicing of the appliance easier.

This logbook forms part of the industry's Benchmark code of practice for the installation, commissioning and servicing of central heating systems.

Please ensure that the logbook is fully completed and left with the customer for future reference, along with Users Instructions and this Installation and Servicing Instruction manual.

5.11 GAS CONVERSION

Appliances may be converted from one gas group to another. It is possible to convert between Propane and Natural gas by use of conversion kits. The kits comprise the following:

Propane to Natural Gas

Kit Numbers
955123 - Eden CBX 32
955124 - Eden CBX 24
955125 - Eden SBX 30
988642 - Eden CBX 38
Conversion Instructions
Gas Control Valve
Data Badge (Natural Gas)
Boiler Chip Card Nat Gas
Cork Gasket
Polydome Badge (Natural Gas)

Natural Gas to Propane

Kit Numbers
955120 - Eden CBX 32
955121 - Eden CBX 24
955122 - Eden SBX 30
988641 - Eden CBX 38
Conversion Instructions
Gas Control Valve
Data Badge (Propane)
Boiler Chip Card Propane
Cork Gasket
Polydome Badge (Propane)

Instruction on how to convert the appliance is given in the conversion instructions supplied with these kits. However, particular attention should be given to the fitting of the gas valve and the use of the Boiler Chip Card (BCC).

For further information contact: Halstead Boilers Ltd, Service Help Line: 0844 371 1111.

5 COMMISSIONING & TESTING

5.1 FILLING THE WATER SYSTEM

Before commissioning the appliance, the whole gas installation including the meter MUST be purged and tested for gas tightness in accordance with BS 6891: 1988.

Open all doors and windows, extinguish naked lights, and DO NOT SMOKE whilst purging the gas line.

Before commencing the commissioning procedure, ensure that the gas service cock is turned on, the electricity supply is isolated, and that the CH and DHW pipe-work (where fitted) is complete. A special feature of the CBX appliances is that the water systems can be completely filled prior to fitting the appliance. It is recommended that this procedure be followed even when the appliance is to be fitted immediately after filling the system. Fill the water systems by following the procedure detailed below steps 1 to 5, and referring to Figure 17.

It is recommended, where possible, to flush the CH system without the appliance fitted, to avoid debris and flux blocking the waterways within the appliance.

17 COMMISSIONING THE WATER SYSTEM

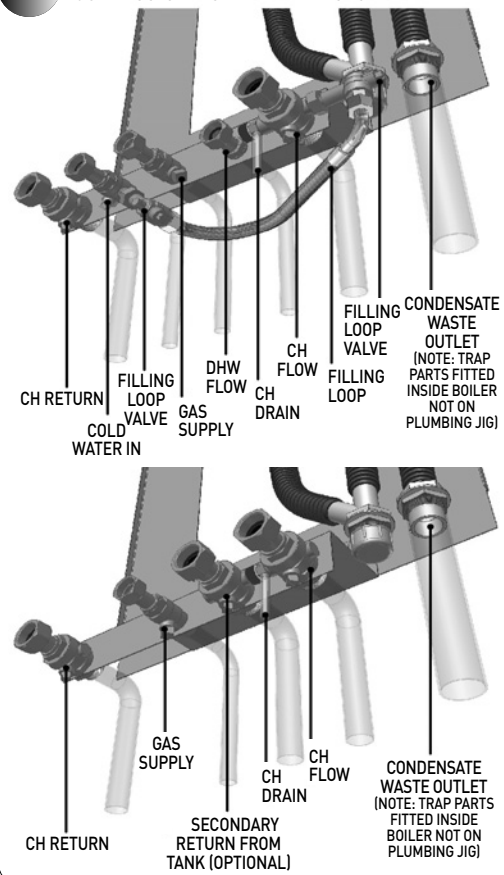

1) Check that the CH flow, return, (and DHW return on SBX appliance if used), isolating valves are in the open position.
2) Fill the system with water using one of the approved methods described in section 3.7 to about 2.0 bar, (filling loop provided on CBX appliances). Vent the system via the radiator valves and system air vents in accordance with normal practice. Ensure that all system air vents are closed.

To aid venting, a manual air vent is provided on the LHS of the heat exchanger, and an automatic air vent on the pump assembly.

3) Check the system for soundness.
4) Check the operation of the pressure relief valve (Figure 18) by lifting the lever on the valve gently to ease the valve off its seat. Checking that water is discharged, release the lever and ensure that the valve seats correctly and does not leak.

Do not use the pressure relief valve to drain the system, because dirt or debris could prevent the valve seating correctly. If the valve leaks or sticks closed, then replace it.

18

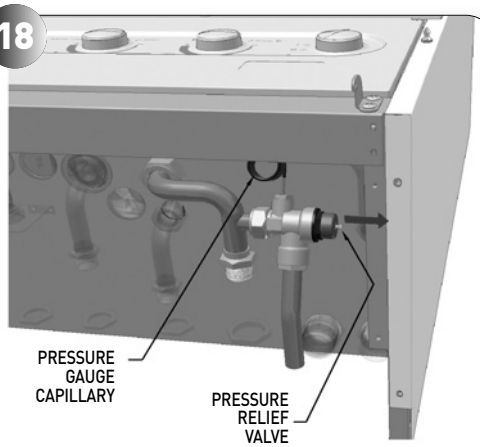

5) Drain the entire system to flush out any debris, and refill to 0.2 bar above the system design pressure (between 0.5 and 1.5 bar) by repeating the above procedure. Follow the commissioning procedure described below, and then repeat this instruction with the system hot. It is recommended that the system be cleaned with a recognised system cleaner such as Fernox or Sentinel.
6) On CBX appliances, open the DHW inlet valve and operate each hot water tap in turn to clear all the air from the pipes and the appliance.
7) Remove the pump cap; use a screwdriver to rotate the pump shaft. Replace the cap.
8) Disconnect the filling loop from the system.
9) Prior to lighting the appliance to check the gas rates, the central heating system should be checked for circulation by operating the appliance with the gas turned off, this is to ensure that no air locks occur. The appliance may go into ignition lockout and require resetting.

5.2 COMMISSIONING THE APPLIANCE

NOTE: The combustion values at minimum gas rate and maximum gas rate must be checked using a suitable calibrated flue gas analyser. Compliance with BS7967-2, BS7967-3 and BS7967-4 is essential.

Combustion checks at minimum gas rate

a) To check the flue gas levels at minimum gas rate it is necessary to set the boiler into 'Service Mode' (Fig. 19b).

NOTE: Service mode automatically stops after 10 minutes and the boiler returns to normal operation.

b) Turn the CH knob fully clockwise - Note the knob will turn past the maximum temperature mark to 'Service mode' (Fig. 19b).

c) The two CH lights (3&4) will flash continuously - the boiler is now running at minimum rate.

d) Check the Carbon Monoxide (CO) and Carbon Dioxide (CO_2) readings are within the range quoted in table 2.3 on page 3.

NOTE: If the combustion levels are outside the range quoted in table 2.3 see Adjustment of the Gas Valve opposite.

Combustion checks at maximum gas rate

e) To check the combustion gas levels at maximum gas rate, place the boiler into 'Service mode' as explained above.

f) Now turn the CH knob to the 12 o'clock position and then back fully clockwise into 'Service mode' within 3 seconds. The boiler will now run at maximum gas rate for 10 minutes.

NOTE: Check the Carbon Monoxide and Carbon Dioxide levels are within the range quoted in table 2.3 on page 3.

Adjustment of the Gas Valve

NOTE: DO NOT ATTEMPT TO ADJUST THE GAS VALVE UNLESS YOU HAVE A SUITABLE PORTABLE COMBUSTION GAS ANALYSER THAT IS CHECKED AND WITHIN CALIBRATION. COMPLIANCE WITH BS7967-2, BS7967-3 AND BS7967-4 IS ESSENTIAL.

g) With the front door fitted, put the boiler into 'Service Mode' at maximum gas rate-see points e & f opposite. If the Carbon Dioxide (CO_2) level is outside the required values, adjust the throttle adjustment screw (Fig. 19a) Clockwise to decrease CO_2 or Anti-Clockwise to increase CO_2.

h) When the CO_2 level has stabilised, check the Carbon Monoxide (CO) level is within the range shown in Table 2.3 on page 3.

IMPORTANT: After any adjustment of the gas valve, it is essential to check the combustion levels at minimum gas rate (table 2.3). If the Carbon Monoxide or Carbon Dioxide levels are outside the range quoted, call Halstead Boilers Ltd Technical Helpline on 0844 371 1111. **If in doubt ASK!**

19a Gas Valve

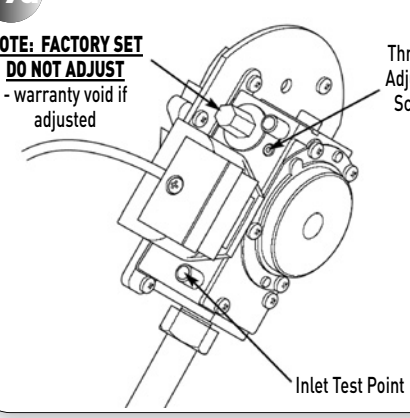

19b FASCIA PANEL AND CONTROLS (CBX model shown)

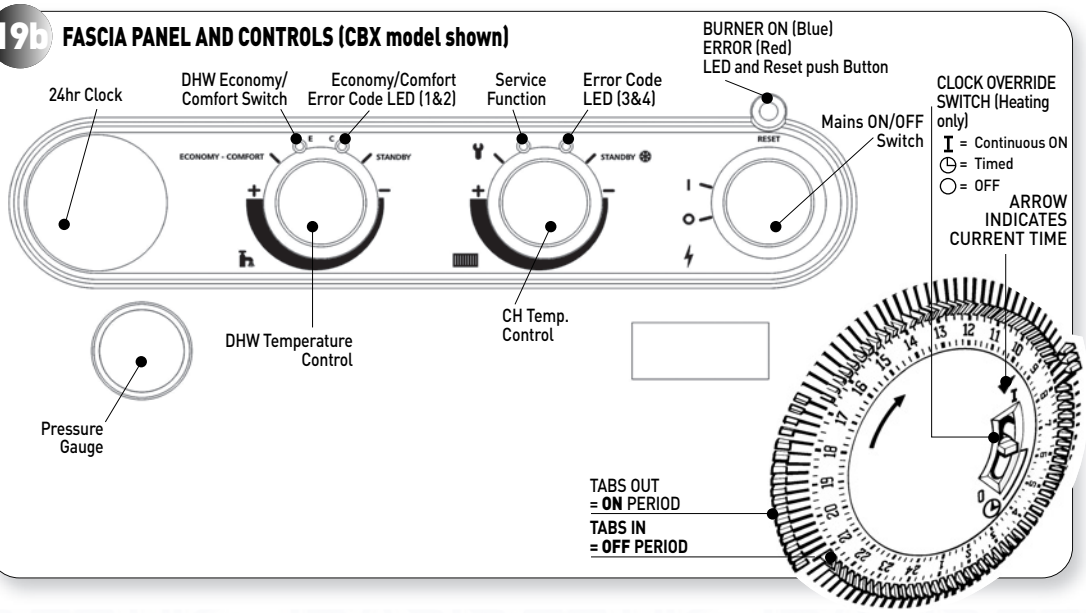

20

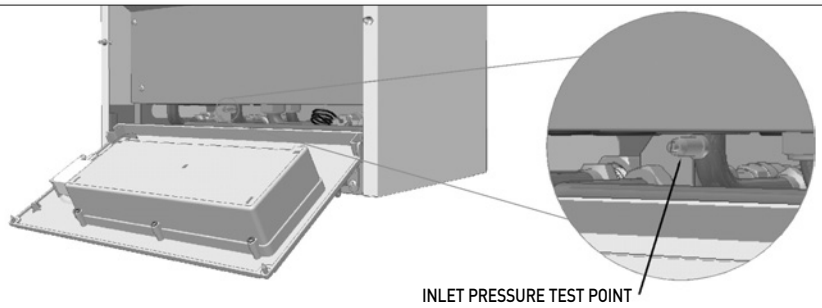

NOTE:
On the CBX 38, the inlet pressure test point is situated on the gas service cock.

5.3 DHW FLOW RATE (CBX APPLIANCES ONLY)

A flow regulator is supplied factory fitted to the appliance to ensure that no adjustment is necessary. Should the mains flow rate be below the minimum required, it is possible to remove the flow regulator from the appliance as instructed in section 9. The nominal pre-adjusted flow rate may vary by ± 5 % due to factory tolerances and mains water pressure fluctuation.

5.4 FINAL CHECKS

a) Turn both the DHW and CH temperature control knobs to standby.

b) Turn the appliance on/off switch to the off ('0') position, remove the manometer and tighten the appliance inlet pressure test point screw. Re-light the burner and test for gas tightness.

c) Fit the appliance casing as described and illustrated in Figure 21: Fit each side panel with two screws at the top and bottom of each panel. Position and fit controls cover in place using screws provided. Ensure it hinges correctly. Fit the front panel in position using locating studs and ensure it's correctly seated by pressing.

d) Set the heating and hot water controls to the required settings. For CBX appliances ensure that the clock override switch is in the timed position and check that the time clock is set at the desired time periods. Set the room thermostat (if fitted) to the required setting.

e) For SBX appliances if the cylinder / tank sensor if fitted set the hot water sensor to the required setting. Refer to separate cylinder / tank sensor instructions.

5.5 LOCKOUT INDICATION

In the event of failure during an ignition sequence, (5 attempts) the **Reset** LED will show steady RED. By pressing and holding the **Reset** button for 3 seconds the **Reset** LED will flash RED and LEDs 1 to 4 will display the error code (0011). To **Reset** the appliance and initiate a further ignition attempt, press the **Reset** button.

NOTE: In the event of failure during normal running, the Reset LED will show steady RED.

To access the relevant error codes, press the **Reset** button for three seconds. The **Reset** LED will flash RED. To reset the appliance press the **Reset** button. Refer to 'fault finding' Section 8.

5.6 FROST PROTECTION

The appliance is fitted with a frost protection device. In the event of very cold conditions, the pump may operate and the appliance light for a few minutes to protect the appliance and system from potential frost damage. This can only function if the gas and electricity supplies are maintained and the ON/OFF switch on the appliance is left ON. ('t') On CBX appliances the time clock can be switched to the OFF setting.

5.7 OVERHEAT PROTECTION

The appliance incorporates flow and return thermostats, which monitor the appliance's operating temperature. Abnormal temperatures such as overheating will cause the appliance to go to lockout and the **Reset** button will show steady RED, if the error codes are accessed the LED 4 (code 0001) will illuminate. Allow the appliance to cool, and then press the **Reset** button to clear.

21 **CASING**

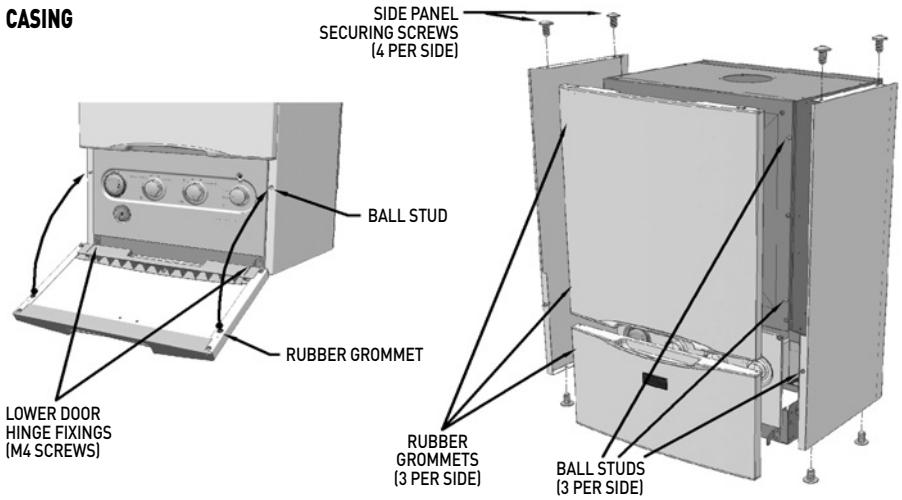

Glen Dimplex Boilers, Stoney Lane, Prescot Merseyside L35 2XW.

For telephone enquiries call: 0844 371 1111.

Website: www.glendimplexboilers.com

Part of the Glen Dimplex Group

WRAS APPROVED PRODUCT

benchmark

The code of practice for the installation, commissioning & servicing of central heating systems

Glen Dimplex Boilers is continuously improving its products and may therefore change specifications without prior notice. The statutory rights of the consumer are not affected.

03/10 751030 Issue 4

SALES AND SERVICE HELPLINE: 0844 371 1111