SINGLE PAGES 20/9/10 09:58 Page 1

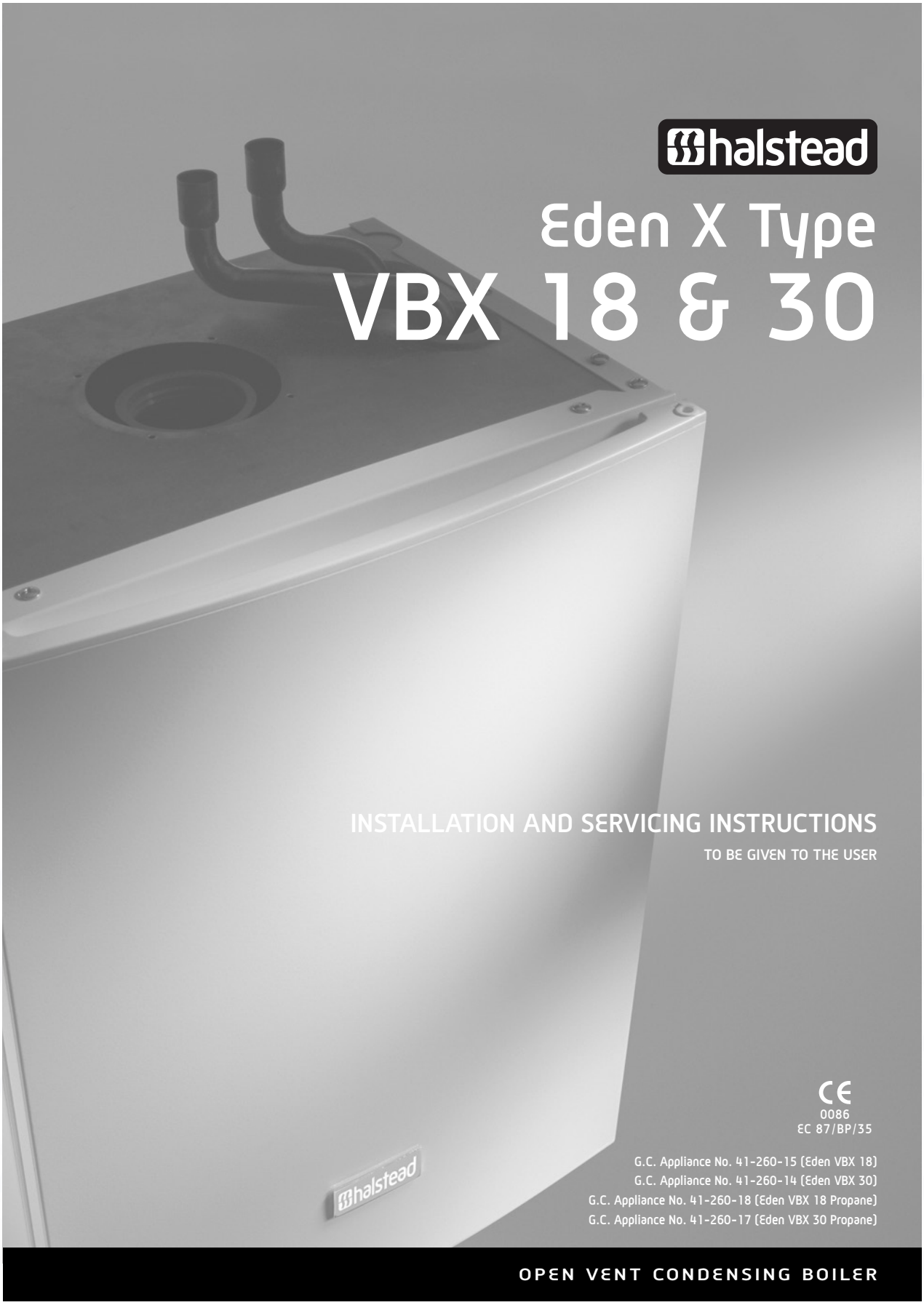

halstead

Eden X Type
VBX 18 & 30

INSTALLATION AND SERVICING INSTRUCTIONS

TO BE GIVEN TO THE USER

CE
0086
EC 87/BP/35

G.C. Appliance No. 41-260-15 (Eden VBX 18)
G.C. Appliance No. 41-260-14 (Eden VBX 30)
G.C. Appliance No. 41-260-18 (Eden VBX 18 Propane)
G.C. Appliance No. 41-260-17 (Eden VBX 30 Propane)

OPEN VENT CONDENSING BOILER

CONTENTS

1	**Introduction**	**0**
1.1	Important Information	1
1.2	General Description	1
2	**Technical Specifications**	**2**
2.1	Gas Categories	2
2.2	Performance Data	2
2.3	General Specifications	3
2.4	Overall Dimensions & Minimum Clearances	4
2.5	Concentric Air / Flue Duct Specifications	4
2.6	Additional Concentric Flue Kits	8
2.7	Appliance Hydraulic Circuit	10
3	**Installation Requirements**	**11**
3.1	Statutory Requirements	11
3.2	Appliance Location	11
3.3	Flue Terminal Position	11
3.4	Ventilation Requirements	11
3.5	Condensate Disposal	12
3.6	Gas Supply	12
3.7	Central Heating System	12
3.8	Draining Tap	13
3.9	Safety Valve Open Vented System	13
3.10	Pump	13
3.11	Flow Rate	13
3.12	Water Treatment	13
3.13	Open Vented Hot Water System	13
3.14	Domestic Hot Water Cylinder	13
3.15	Sealed Hot Water Systems	13
3.16	Safety Valve Water System	13
3.17	Expansion Vessel	14
3.18	Pressure Gauge	14
3.19	Water Makeup	14
3.20	Filling a Sealed Water System	14
3.21	Electricity Supply	15
3.22	External Controls	15
4	**Appliance Installation**	**16**
4.1	Unpacking The Appliance	16
4.2	Preparing The Wall	16
4.3	Mounting The Appliance	16
4.4	Central Heating Service Connections	17
4.5	Gas Connection	17
4.6	Condensate Connection	17
4.7	Air / Flue Duct Installation	17
4.8	Electrical Connections	19
5	**Commissioning**	**21**
5.1	Filling the Water System	21
5.2	Commissioning the Appliance	21
5.3	Final Checks	22
5.4	Lockout/Reset Indication	22
5.5	Frost Protection	22
5.6	Overheat Protection	22
5.7	Other Features: Anti Cycle Device, CH Soft start Device, Service Mode	22
5.8	Users Instructions	23
5.9	Appliance Log Book	23
5.10	Gas Conversion	23
6	**Routine Servicing**	**24**
6.1	Combustion Check	24
6.2	Gas Control Valve, Fan & Burner Assembly	24
6.3	Burner	24
6.4	Ignition & Detection Electrodes	24
6.5	Combustion Chamber & Heat Exchanger	25
6.6	Condensate Drain	25
6.7	Sealed Water System	26
6.8	Re-assembly & Re-commissioning	26
6.9	Final Checks	26
7	**Internal Wiring Diagrams**	**27**
7.1	Functional Flow Wiring Diagram	27
8	**Fault Finding**	**28**
8.1	General	28
8.2	Diagnostic LED Indicators	28
8.3	Faulting Finding Codes	28
8.4	Central Heating Fault Finding	28
9	**Replacement Of Parts**	**30**
9.1	Ignition and Detection Electrodes	30
9.2	Ignitor Unit and Ignition Leads	30
9.3	Gas Control Valve including Air Inlet Cowl	31
9.4	Fan	33
9.5	Burner	33
9.6	Combustion Chamber Front Insulation	34
9.7	Combustion Chamber Rear Insulation	34
9.8	Heat Exchanger	34
9.9	Flue Hood	35
9.10	Water Temperature Sensors	35
9.11	Flue Sensor	36
9.12	Condensate Drain System	36
9.13	Control PCB	36
10	**Short Parts List**	**37**

1 INTRODUCTION

The Halstead **VBX range** are high efficiency condensing, fully automatic, wall mounted gas appliances suitable for either room sealed or opened flued applications, for use with natural gas (G20) and LPG (G31). They are designed for use with either sealed or open vented central heating systems.

The appliances feature an attractive white powder coated casing, with inset control panels. The flue systems are in white powder coat to give a clean attractive appearance to the installation.

A telescopic horizontal concentric air/flue duct terminal is available, suitable for room sealed applications. The duct assembly is connected to the appliance via a turret, which can be orientated to provide different horizontal duct directions. Extension ducts may be fitted in accordance with and up to the maximum dimensions stated in these instructions.

A vertical concentric outlet kit is also available for installations where an outside wall is not accessible or where it is desired to fit the duct 'through the roof'. Installation using the horizontal duct is described in the main text of these instructions and additional information is provided in the vertical outlet kit for the vertical installation option. (Note: If the vertical outlet kit is to be used, access to the roof is necessary).

Other flue kits are available for open flued (B23), split flued (C53), and special (C13) applications, contact Halstead Glen Dimplex service helpline Tel: 0844 371 1111, for further details, **ONLY APPROVED FLUE KITS OR EXTENSIONS MAY BE USED WITH THESE APPLIANCES.**

1.1 IMPORTANT INFORMATION

IT IS A STATUTORY REQUIREMENT THAT ALL GAS APPLIANCES ARE INSTALLED BY COMPETENT PERSONS, (i.e. CORGI REGISTERED INSTALLERS) IN ACCORDANCE WITH THE GAS SAFETY (INSTALLATION AND USE) REGULATIONS (CURRENT EDITION). FAILURE TO COMPLY WITH THESE REGULATIONS MAY LEAD TO PROSECUTION.

These appliances have been tested and certified in order to satisfy the necessary European Directives and comply with the latest Building Regulations, including the efficiency requirements of the SEDBUK scheme.

Gas Appliance Directive	90/396/EEC
Efficiency of Hot Water Boilers Directive	92/42/EEC
Low Voltage Directive	93/68/EEC
Electromagnetic Compatibility Directive	92/31/EEC

No modifications to these appliances should be made unless they are fully approved by the manufacturer.

Appliance installation must be carried out by a competent person and must be in accordance with the current legislation in force at the time of installation, in the country of destination.

The manufacturer's instructions must not be taken as overriding any statutory requirements.

GAS LEAKS. DO NOT OPERATE ANY ELECTRICAL SWITCHES, OR USE A NAKED FLAME. TURN OFF THE GAS SUPPLY. VENTILATE THE AREA BY OPENING DOORS AND WINDOWS. CALL OUT YOUR LOCAL GAS SUPPLIER TEL: 0800 111 999.

Control of Substances Hazardous to Health

Under Section 6 of the Health and Safety at Work Act 1974, it is required to provide information on substances hazardous to health.

The adhesives and sealants used in this appliance are cured and give no known hazard in this state.

Insulation Pads - These can cause irritation to skin, eyes and the respiratory tract. If you have a history of skin complaints you may be susceptible to irritation. High dust levels are usual only if the material is broken. Normal handling should not cause discomfort, but follow normal good hygiene and wash your hands before eating, drinking or going to the lavatory. If you do suffer irritation to the eyes or severe irritation to the skin seek medical attention.

Gas and Electricity Consumer Council (Energywatch)

Energywatch is an independent organisation, which protects the interests of gas users. If you need advice concerning energy issues, they may be contacted on their consumer help line number: 08459 060708, or via their web site;
http://www.energywatch.org.uk.

1.2 GENERAL DESCRIPTION

The appliances incorporate a microprocessor based, fully modulating air/gas ratio control system with direct burner ignition, which provides a modulated heat output to central heating (CH) demand, and with internal frost protection provided as standard.

The heat exchanger is constructed from stainless steel, and there is the option for routing the flow and return connections either via top or bottom connections.

The appliance may be used with any certified mains voltage room thermostat, and can operate without the need for an automatic bypass valve in the CH circuit, however, it is recommended that one radiator in the room where the room thermostat is fitted is installed without thermostatic radiator valves to allow the pump overrun facility to operate correctly.

WHEN INSTALLING, COMMISSIONING OR SERVICING A GAS APPLIANCE THAT INCORPORATES A PRE-MIX BURNER AND ZERO-SET GOVERNOR, BECAUSE IT IS NOT POSSIBLE TO MEASURE AN OPERATING PRESSURE THE ENGINEER SHOULD FIRST CHECK THAT THE GAS SUPPLY IS METERED AND ASCERTAIN WHETHER IT IS POSSIBLE TO MEASURE THE GAS RATE. IF THE GAS INPUT RATE CAN BE MEASURED THEN THE REQUIREMENTS OF GSIUR 26(9) CAN BE MET, INCLUDING ANY SPECIFIC REQUIREMENTS IN MANUFACTURER'S INSTRUCTIONS.

IF GAS INPUT RATE CANNOT BE MEASURED THEN, TO SATISFY THE INTENT OF GSIUR 26(9), THE ENGINEER SHALL MEASURE THE COMBUSTION QUALITY OF THE APPLIANCE IN ACCORDANCE WITH BS 7967 OR THE MANUFACTURER'S INSTRUCTIONS.

IF THE ENGINEER DOES NOT HAVE THE REQUIRED EQUIPMENT AND NO ALTERNATIVE TEST IS SPECIFIED BY THE MANUFACTURER THEN THE APPLIANCE SHALL BE TURNED OFF AND DISCONNECTED AS AN UN-COMMISSIONED APPLIANCE UNTIL SUCH TIME THAT EQUIPMENT IS AVAILABLE TO UNDERTAKE SUCH TESTS.

2 TECHNICAL SPECIFICATIONS

2.1 GAS CATEGORIES

These appliances are certified to comply with the requirements of EN 483, EN 677, and EN 625 for use in GB and IE (Great Britain and Ireland) using the following gas categories:

Eden VBX 30, Eden VBX 18:

II_{2H3P} (G20 with a governed gas supply at 20 mbar (8 in.wg) inlet pressure).

Eden VBX 30 Propane, Eden VBX 18 Propane:

II_{2H3P} (G31 (Propane) with a regulated gas supply at 37 mbar (14.9 in.wg) inlet pressure).

The appliance classification (as defined in EN 483) may be any of the following depending on the chosen flue option: C_{13}, C_{33}, C_{53}, or B_{23}

2.2 PERFORMANCE DATA

Appliance			VBX30	VBX18	VBX30 Propane	VBX18 Propane
Mode	**Rate**					
Central Heating Output (non-condensing) (80 - 60 °C)	Max	kW (Btu/h)	30.0 (102400)	18.0 (61400)	30.0 (102400)	30.0 (61400)
	Min	kW (Btu/h)	8.2 (28200)	5.9 (20100)	8.2 (28000)	5.9 (20100)
Central Heating Output (condensing) (50 - 30 °C)	Max	kW (Btu/h)	32.1 (109500)	19.3 (65900)	32.1 (109500)	19.3 (65900)
Central Heating Input Max Rate	Net	kW (Btu/h)	30.4 (103700)	18.4 (62800)	30.4 (103700)	18.4 (62800)
	Gross	kW (Btu/h)	33.8 (115300)	20.4 (69600)	33.0 (112700)	20.0 (68300)
Central Heating Input Min Rate	Net	kW (Btu/h)	7.6 (26000)	5.5 (18800)	7.6 (26000)	5.5 (18800)
	Gross	kW (Btu/h)	8.4 (28600)	6.1 (20800)	8.3 (28300)	6.0 (20500)
Central Heating Gas Rate (after 10 min operation - hot)	Max	m3/h (ft3/h) kg/h	3.22 (113.7)	1.95 (68.9)	2.36	1.43
Seasonal Efficiency		%	90.4	90.3	92.4	92.3
Seasonal Efficiency (SEDBUK)		Band	"A"			
Nox Classification		Class	"5"			
Min Central Heating System Pressure (Head)		Bar	0.1 (1m H_2O)			
Max Central Heating System Pressure (Head)		Bar	3.0			
Max Central Heating Flow Temperature		°C	80			
Min Central Heating Flow Temperature		°C	30			

2.3 GENERAL SPECIFICATIONS

Natural Gas and Propane versions

Appliance		VBX30	VBX18
Total weight (full)	kg	38.1	32.6
Total weight (empty)	kg	36.1	31.3
Max lift weight	kg	28.1	24.7
Total water capacity	l	2.0	1.3
Electrical supply		230V 50Hz Fuse at 3A	
Internal fuse		T4H 4A 250V	
Maximum power consumption	W	47	30
IP Rating		IP20	
Flue gas temperature Nat Gas 80/60 (Propane)	°C	73 (76)	74 (72)
Flue gas temperature Nat Gas 50/30	°C	41	43
CO_2 value max rate (Nat Gas)	%	9.2 ± 0.3 case on 9.0 ± 0.2 case off	
CO_2 value min rate (Nat Gas) ref only	%	8.9 ± 0.1	8.4 ± 0.1
CO value max rate (Nat Gas)	%	0.01 ± 0.005	
CO_2 value max rate (Propane)	%	10.7 ± 0.3 case on 10.5 ± 0.2 case off	
CO_2 value min rate (Propane) ref only	%	10.0 ± 0.1	9.7 ± 0.1
CO value max rate (Propane)	%	0.019 ± 0.005	
Flue products mass flow rate	g/s	13.7	8.3
Flue products mass flow rate (Propane)	g/s	13.7	8.3
Gas Valve Offset @ min rate	Pa	-3.0	

Connections

Gas	15mm compression
CH Flow	22mm tail
CH Return	22mm tail
Condensate Drain	21.5 - 22mm plastic overflow pipe

2.4 OVERALL DIMENSIONS AND MINIMUM CLEARANCES

1

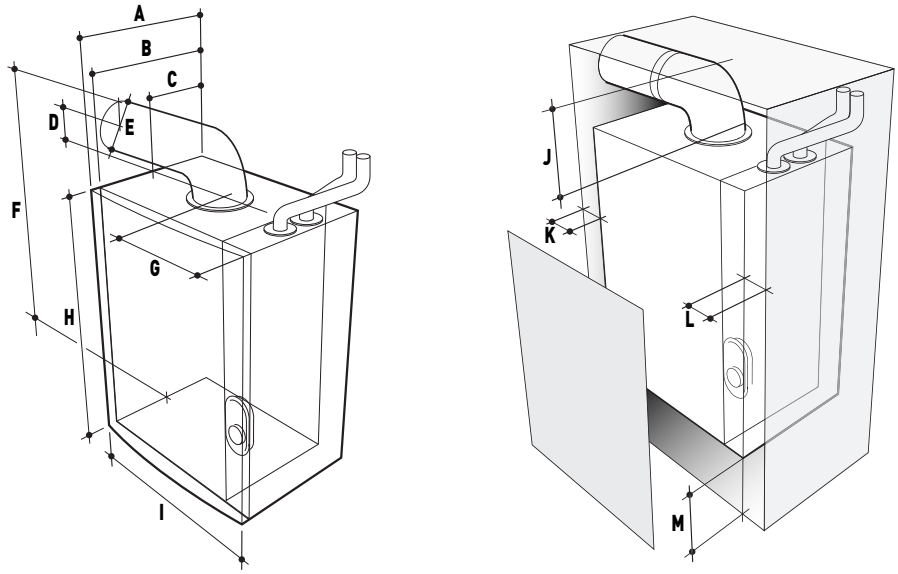

	A	B	C	D	E	F	G	H	I	J	K	L	M
EDEN VBX18	320	280	150	97	100	694	200	540	400	200	5	5	200
EDEN VBX30	360	320	150	97	100	694	200	540	400	200	5	5	200

2.5 CONCENTRIC AIR / FLUE DUCT SPECIFICATIONS

The EDEN 'x-type' range can be installed to a number of different concentric flue systems. The different flue applications as shown in Figure 2 are available as kits usually comprising the connecting parts to the appliance and end terminal. Flue extension ducts and extension elbows are available as accessories.

2 FLUE OPTIONS

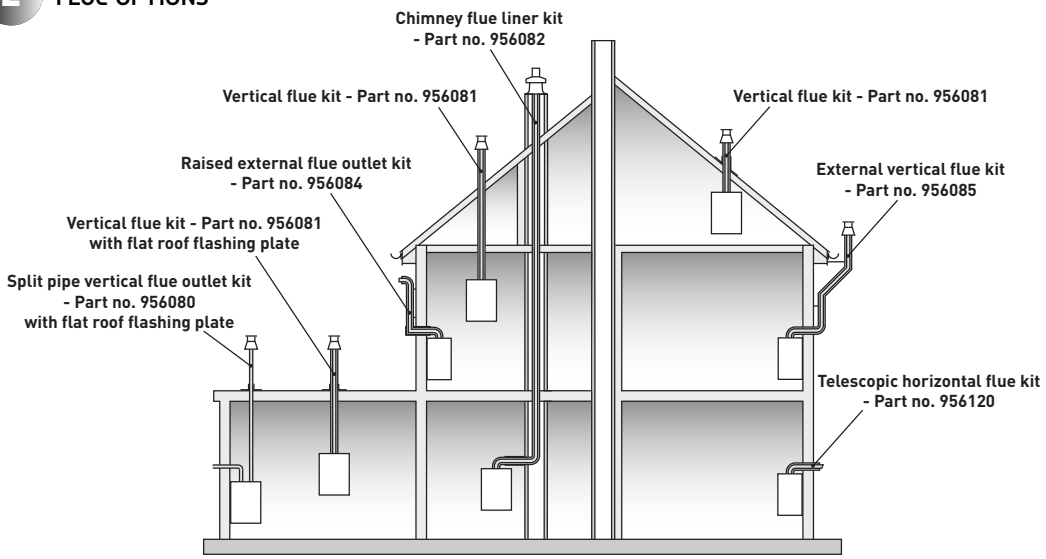

Flue system application

4 The following systems are available for the EDEN 'x-type' range.

2.5.1 KIT A + TELESCOPIC HORIZONTAL WALL TERMINAL (C13) - PART NO. 956120

3a

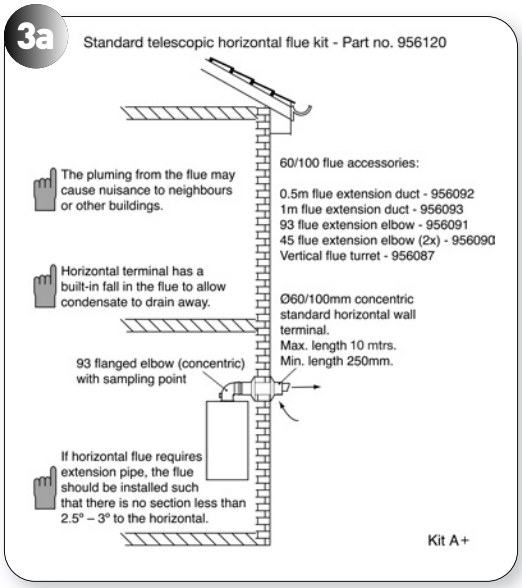

Traditional concentric flue system, Figure 3a, with a maximum length of 10m*. The flanged flue elbow is designed with 3° slope towards the appliance so that the condensate can easily drain off. It has to be considered that for every metre horizontal flue length the terminal exit centreline is approx. 45 mm higher than the elbow's centreline. The standard telescopic terminal is 615mm max length and 430mm min length, but can be cut to a minimum flue length of 250mm, which is suitable for single, 100mm (4"), brick walls.

2.5.2 KIT B VERTICAL CONCENTRIC FLUE TERMINAL (C33) - HBL PART 956081

3b

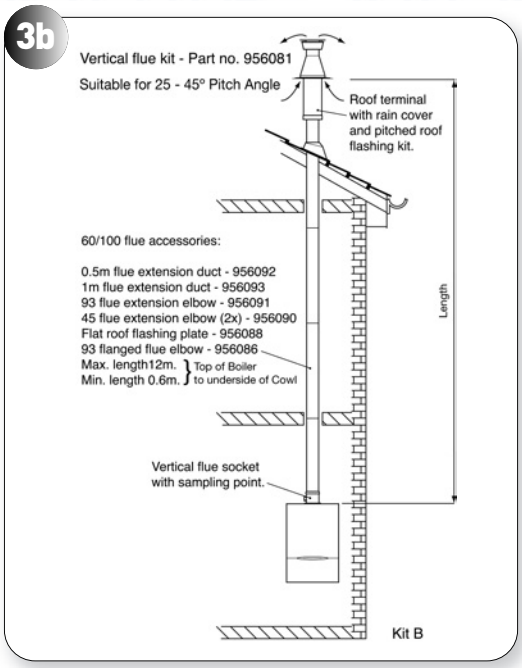

Standard concentric (ø100/60) vertical flue application, Figures 3b, 3c, through roof attics with a maximum length of 12m*. The kit comprises of the roof terminal, vertical adaptor with sampling point and bracket. The maximum length is measured from the top of the appliance casing to the underside of the air cowl.

The maximum length is measured from the top of the appliance casing to the underside of the air cowl.

For installation details refer to the flue kit instructions.

*** Note: Flues which exceed 7mtrs in length will be subject to a small percentage decrease in heat input (below the standard tolerance) as shown in graph 'A' below.**

GRAPH A

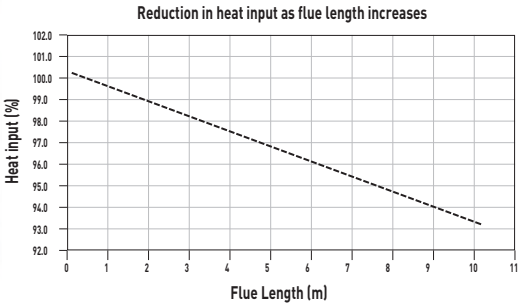

Horizontal flues (C_{33}) up to 10m in length, or equivalent, may be used, however a reduction in the heat input will occur. The graph shows details.

3c

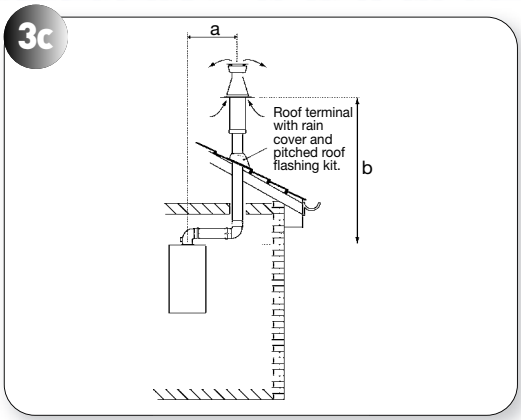

Fig 3(c) Offset vertical flue.

'a' measured from boiler flue outlet centre line to the centre line of the extension elbow.

'b' measured from the top of the boiler to the underside of the air cowl.

Maximum allowable length of a + b = 8900mm

2.5.3 KIT C: HORIZONTAL ANTI-PLUME FLUE KIT (C13) - PART NO. 956084

If the standard horizontal terminal is likely to cause nuisance to a neighbour or buildings, because of excess pluming, then this particular flue kit raises the flue gas outlet point to a higher elevation with the minimum amount of changes. The flue gas duct is teed-off from the concentric part and covered by an 80mm outer tube to protect the flue duct from freezing. The air in-take remains at the lower level (see Figure 3d).

If choosing this option then the external flue duct length should be taken into account when calculating equivalent flue length.

For installation details refer to the flue kit instructions.

3d

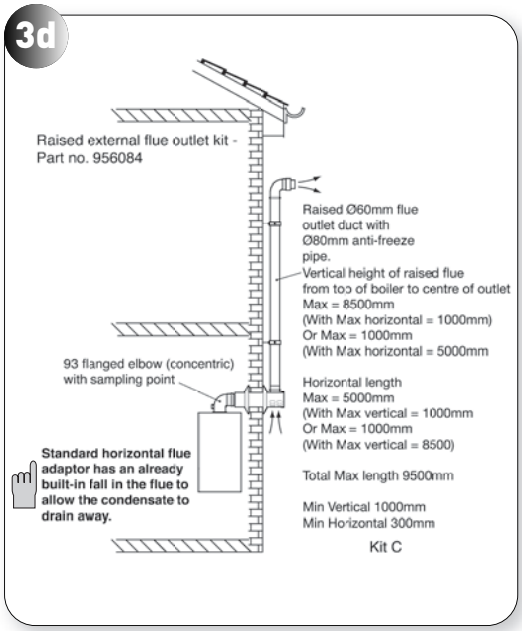

2.5.4 KIT D EXTERNAL VERTICAL FLUE - (C33) PART NO. 956085

3e

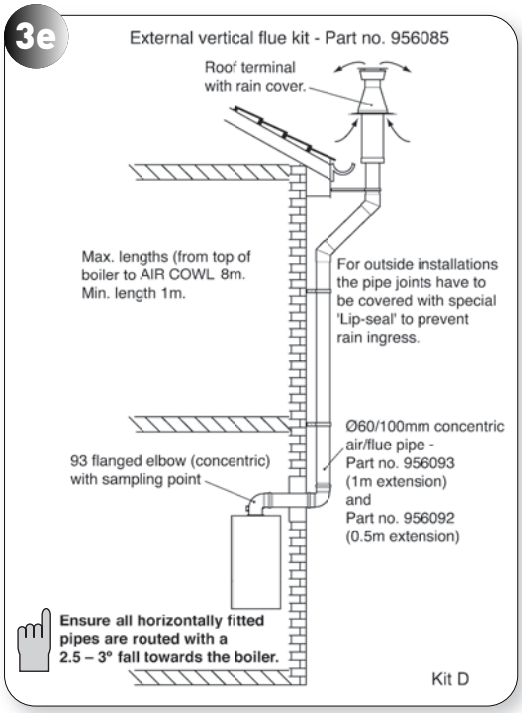

Suitable for installations if the appliance can't be repositioned and where other horizontal flue options may causes some nuisance to neighbours or buildings. The flue kit contains some additional 45° elbows and extension ducts as well as a special wall bracket to pass the guttering (see Figure 3e). The concentric flue will be routed vertically alongside the outside wall to above the roofline. Special seals are required to prevent rainwater penetrating the pipe joints.

For installation details refer to the flue kit instructions.

2.5.5 KIT E CHIMNEY FLUE LINER KIT (B23) - PART NO. 956082

This kit is suitable for open flue application in accordance with BS5440 where a room sealed flue installation is impractical. The kit comprises of a flue adaptor from the appliance to the chimney, a flexible plastic flue liner with connection parts and chimney terminal (see Figure 3f). Where an open flue system is used, then an air vent must be provided in the same room or internal space as the flue duct air inlet, see section 3.4.

For installation details refer to the flue kit instructions.

Max flexi liner length = 30mtrs
Min flexi liner length = 5mtrs

Max concentric length = 2000mm
Min concentric length = 100mm

3f

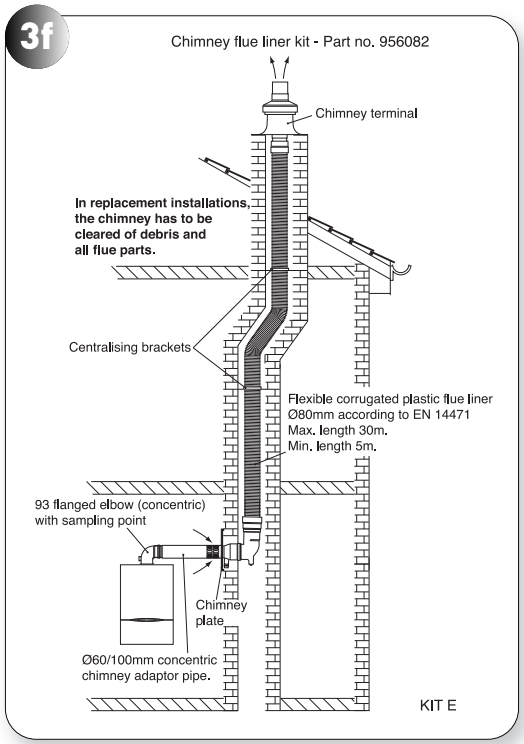

A flue system can be built up from the components detailed in the table on the next page, but the total flue resistance must not exceed the maximum stated.

FLUE LENGTHS

Length supplied in standard kit - horizontal	815mm
Max horizontal length (from boiler to chimney - 60/100mm)	2000mm
Min horizontal length (from boiler to chimney - 60/100mm)	100mm
Max vertical length (from boiler to chimney - 60/100mm)	2000mm
Min vertical length (from boiler to chimney - 60/100mm)	200mm
Length supplied in standard kit - vertical (available in 10m, 20m and 30m length)	N/A
FLEXITUBE MUST BE PURCHASED AS AN ACCESSORY TO COMPLETE THE KIT (See below)	
Flexi tube min length	5m
Flexi tube max length	30m

ACCESSORIES

Description	Part No.	Resistive Length
HORIZONTAL - 60/100 Accessories		
Flue extension duct - 500mm	956092	450mm
Flue extension duct - 1000mm (Incl. 1 x support bracket)	956093	950mm
93° extension elbow	956091	1550mm
45° extension elbow (pair)	956090	775mm
Air inlet duct - included in kit	N/A	N/A
Straight adapter (60/80) - included in kit	N/A	N/A
91.5° adapter elbow (80/80) - included in kit	N/A	N/A
Support bracket - 100mm	840517	N/A
93° flanged elbow - included in kit	956082	N/A
Vertical turret socket	956087	N/A
VERTICAL - Accessories		
Flexi tube - 10m	956110	10m
Flexi tube - 20m	956111	20m
Flexi tube - 30m	956112	30m
Straight duct (80) - included in kit	N/A	N/A
Chimney terminal - included in kit	N/A	N/A

NOTE: RESISTIVE LENGTH INFORMATION ONLY REQUIRED FOR COAXIAL FLUE PARTS. THE CORRUGATED (FLEXI TUBE) FLUE PARTS ARE FIXED AND ALL PARTS ARE REQUIRED FOR EVERY APPLICATION.

2.5.6 KIT F: TWIN FLUE SYSTEM (C53) PART NO. 956080

This flue system kit is designed for installations where the air intake position is different than the flue duct exit point. The kit comprises of a twin adaptor from which the air intake is taken from the adjacent outside wall (see example Figure 3g) and the flue duct is routed vertically through the roof.

It has to be noted that the flue duct is under pressure when the appliance is in operation and the duct can leak poisonous carbon monoxide if the duct components are not correctly assembled. It is **not** recommended to route the flue duct through living space areas, i.e. bed rooms, living rooms etc.

For installation details refer to the instructions provided with the twin flued kit.

For C53 flue systems the terminal for the supply of combustion air and for the evacuation of combustion products shall not be installed on opposite walls of the building.

Maximum flue resistance permitted for a twin flued system = 52 Pa
Minimum flue resistance permitted for a twin flued system = 23.5 Pa

Flue Component	Flue Resistance (Pa)	Part Number
Twin Flue Adaptor (required)	9.5	-
Air Inlet Terminal (required)	3	-
Chimney Terminal (required)	0.5	-
80 mm dia straight duct 1 metre	1	956101
80 mm dia straight duct 2 metre	2	956102
90° Elbow (80/80)	8	956100
45° Elbow (80/80)	4	956099

3g

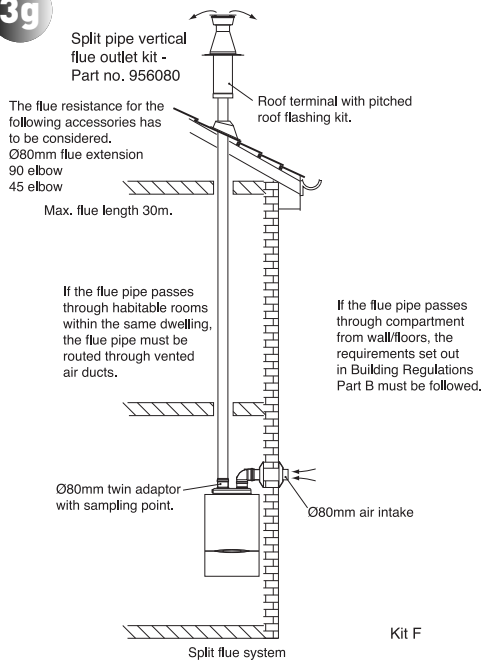

A flue system can be built up from the components detailed in the table, but the total flue resistance must not exceed the maximum stated.

2.6 ADDITIONAL CONCENTRIC FLUE KITS

The following additional concentric kits are available as optional extras.

Flue Extension Ducts - 1000 mm and 500 mm long, (each duct extends the flue length by up to 950 mm and 450 mm respectively).

93° Extension Elbow - Allows an additional bend in the flue, and has an 'equivalent length' of 1550 mm. This elbow is mechanically different from the flanged elbow supplied as standard with the appliance, but has the same equivalent length.

45° Extension Elbow - Allows an additional bend in the flue and has an 'equivalent length' of 775 mm.

Vertical Turret Socket - For use with elevated horizontal flues and vertical terminals.

Vertical Roof Terminal - For use where an external wall is not available, or where it is desirable to route the ducts vertically.

For installation details refer to the instructions provided with the individual flue kits.

These optional kits may be used with the standard flue kits to produce an extensive range of flue options, providing that the following rules are strictly obeyed.

a) The maximum/minimum permissible length of the room sealed flue system are:

Horizontal flue terminal (all orientations)	maximum 10000 mm (197 in)
Horizontal flue terminal (rear exit)	minimum 250 mm (10 in)
Vertical flue terminal	maximum 12000 mm (472 in)
Vertical flue terminal	minimum 600 mm (23½ in)

The 'equivalent' flue length must not exceed the maximum values stated.

b) The standard terminal must always be fitted horizontally; horizontal ducts must have a continuous fall towards the appliance of 2.5°. This ensures condensate runs back into the appliance from the flue system. The vertical terminal must always be used if a vertical outlet is required.

c) The concentric flue system must use either a flanged elbow or a vertical flue turret socket at the entry/exit to the appliance.

d) All joints must be correctly made and secured in accordance with the installation instructions. When cutting ducts, avoid swarf, uneven and sharp edges to maintain duct integrity.

Refer to Figures 2 and 3 to determine which option kits are required before commencing the installation. Instructions for installing the appliance with a horizontal flue and straight extension ducts are included in the main text of these instructions (section 4.8).

2.6.1 PLUME DIVERTER TERMINAL INSTALLATION

Plume Diverter Kit Part No: 956103

(For use with Standard horizontal flue kit - Part no 956083 - only)

This kit is provided to assist in fitting a condensing boiler with reduced clearances when fitted in good practice according to the Guide to Condensing Boiler Installation published by DEFRA/HMSO.

This kit allows the boiler flue outlet to be directed to the left or to the right only.

INSTALLATION INSTRUCTIONS

Under certain operating conditions condensing appliances have a tendency to form a plume of water vapour at the terminal. Therefore consideration should be given when fitting the Plume Diverter in terms of plume dispersal onto adjacent surfaces and neighbouring properties.

a) Refer to section 2.5 for instructions on fitting the flue system. Also see Figure 5 for all other clearances.

The resistance of the diverter is equivalent to 0.5 metre of flue length. Ensure this is used when calculating the maximum allowable flue length. (maximum horizontal flue length restricted to 9.5 metres when using the plume diverter).

The diverter allows the terminal clearance to be reduced as follows (see diagrams below):

Clearance H – From a surface facing the terminal - 600mm.

Clearance F – From internal or external clearances - 300mm.

b) Choose the direction required to deflect the flue products **(left or right only)**

c) Push the diverter elbow onto the angled outlet of the flue terminal in the desired rotational position and ensure the diverter is pushed up to the shoulder to fully engage the rubber seal.

d) Fix the diverter to the flue terminal with the self drilling screw provided. **Do not use a power tool to fit screw.**

3h

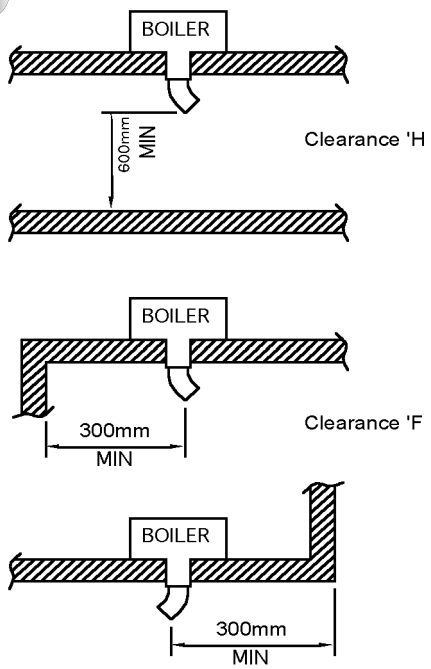

3i

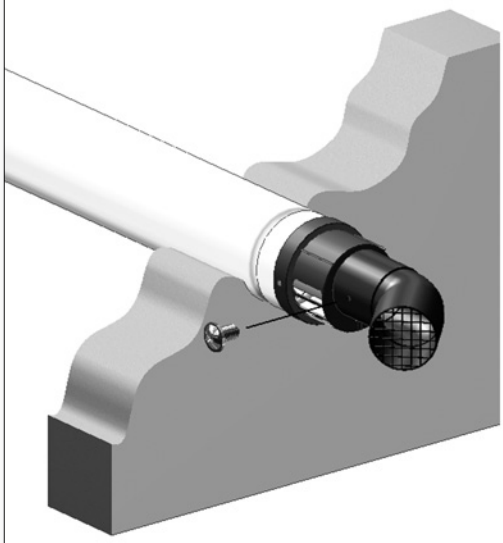

Note.
The Plume Diverter terminal must not under any circumstances deflect flue products downwards.

2.7 APPLIANCE HYDRAULIC CIRCUITS

4

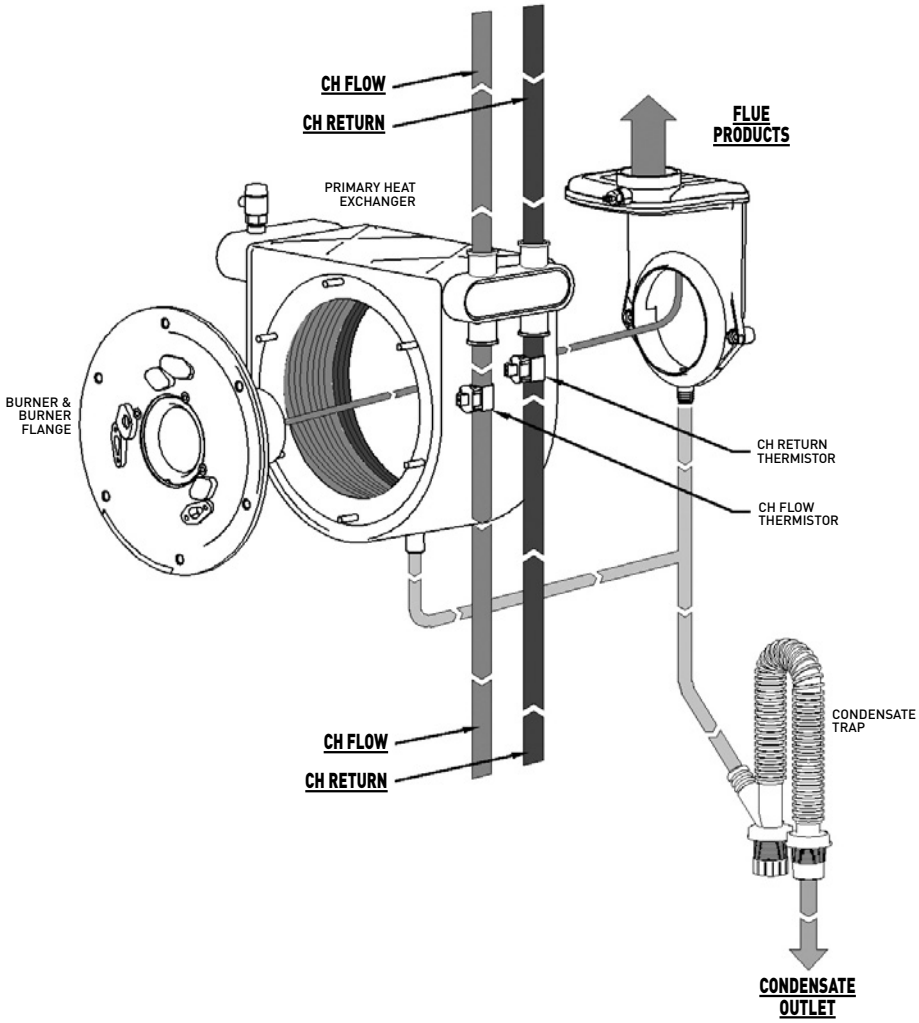

3 INSTALLATION REQUIREMENTS

3.1 STATUTORY REQUIREMENTS

GAS SAFETY (INSTALLATION AND USE) REGULATIONS 1996 (AS AMENDED)

The appliance is suitable only for installation in GB and IE and should be installed in accordance with the rules in force.

In GB, a CORGI Registered Installer must carry out the installation. It must be carried out in accordance with the relevant requirements of the:

Gas Safety (Installation and Use) Regulations

The appropriate Building Regulations either The Building Regulations, The Building Regulations (Scotland), Building Regulations (Northern Ireland).

The Water Fitting Regulations or Water Byelaws in Scotland.

The Current I.E.E Wiring Regulations.

Where no specific instructions are given, reference should be made to the relevant British Standard code of Practice.

In IE, the installation must be carried out by a Competent Person and installed in accordance with the current edition of I.S.813 "Domestic Gas Installations", the current Building Regulations and reference should be made to the current ETCI rules for electrical installation.

It should also be in accordance with the relevant recommendations in the current editions of the following British Standards and Codes of Practice: BS 5449, BS 5546, BS 5440-1, BS 5440-2, BS 6798, BS 6891, Institute of Gas Engineer document IGE/UP-7, BS 7074 (expansion vessel), BS 5482 (propane installations) and IS813 for IE.

IMPORTANT NOTE: Manufacturer's instruction must NOT be taken in any way as overriding statutory obligations.

3.2 APPLIANCE LOCATION

THE FOLLOWING LIMITATIONS MUST BE OBSERVED WHEN SITING THE APPLIANCE:

a) The appliance is not suitable for external installations. The position selected for installation should be within the building, unless otherwise protected by a suitable enclosure and MUST allow adequate space for installation, servicing and operation of the appliance and for air circulation around it (Section 2.4 and 3.4).

b) This position MUST allow for a suitable flue system and terminal position. The appliance must be installed on a flat vertical wall, which is capable of supporting the weight of the appliance and any ancillary equipment.

c) If the appliance is to be fitted in a timber framed building it should be fitted in accordance with the British Gas publication 'Guide for Gas Installations In Timber Frame Housing', Institute of Gas Engineers document IGE/UP-7. If in doubt, advice must be sought from the Local Gas Supplier.

d) The appliance is approved to a protection rating of IP20. Therefore if the appliance is to be installed in a room containing a bath or a shower, any electrical switch or control utilising mains electricity must be so situated that it cannot be touched by a person using the bath or shower. Attention is drawn to the requirements of the current BS 7671 (I.E.E Wiring Regulations) and in Scotland the electrical provisions of the Building Regulations applicable in Scotland.

3.3 FLUE TERMINAL POSITION

DETAILED RECOMMENDATIONS FOR FLUE INSTALLATION ARE GIVEN IN BS 5440-1. THE FOLLOWING NOTES ARE FOR GENERAL GUIDANCE.

a) The appliance MUST be installed so that the terminal is exposed to the external air.

b) It is important that the position of the terminal allows free passage of air across it at all times.

c) It is ESSENTIAL TO ENSURE that products of combustion discharging from the terminal cannot re-enter the building or any other adjacent building, through ventilators, windows, doors, other sources of natural air infiltration, or forced ventilation / air conditioning.

d) The minimum acceptable dimensions from the terminal to obstructions and ventilation openings are specified in Figure 6.

e) If the terminal discharges into a pathway or passageway check that combustion products will not cause nuisance and that the terminal will not obstruct the passageway.

f) Where the lowest part of the terminal is fitted less than 2000 mm (78 in) above the ground, above a balcony or above a flat roof to which people have access, the terminal MUST be protected by a purpose designed K6 terminal guard (optional extra: Part No. 951507).

g) The air inlet / flue outlet MUST NOT be closer than 25 mm (1 in) to combustible material.

h) Condensing appliances have a tendency to form a plume of water vapour at the terminal under certain operating conditions. This is normal but positions where this would cause damage or a nuisance should be avoided. Consideration should be given to the dispersal of the plume in terms of adjacent surfaces and neighbouring properties. A special flue terminal, (Kit C), is available to raise the flue discharge point; use of this terminal will limit the maximum flue length available.

For further information contact: Halstead Glen Dimplex service helpline Tel: 0844 371 1111.

3.4 VENTILATION REQUIREMENTS

Detailed recommendations for air supply are given in BS 5440-2.

The following notes are for general guidance.

a) It is not necessary to have a purpose provided air vent in the room or internal space in which a room-sealed appliance is installed.

b) Cupboard or compartment ventilation is not necessary for a room-sealed appliance providing that the minimum clearances are maintained.

c) Where an open flued, (B23), system is used, then an air vent must be provided in the same room or internal space as the flue duct air inlet, with a minimum free-area of at least:

VBX 30	117 cm^2
VBX 18	57 cm^2

d) If the appliance is installed in a room or internal space with other opened flued appliances, then the size of the air vent necessary should be calculated in accordance with BS 5440-2 Table 2.

5 FLUE TERMINAL POSITION

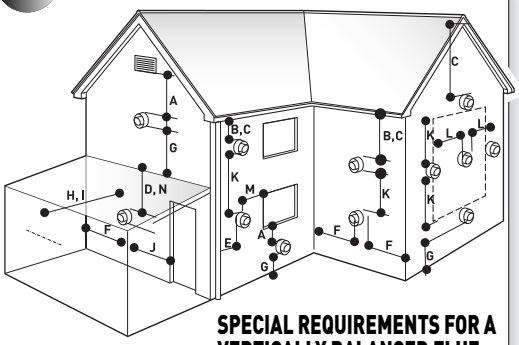

SPECIAL REQUIREMENTS FOR A VERTICALLY BALANCED FLUE

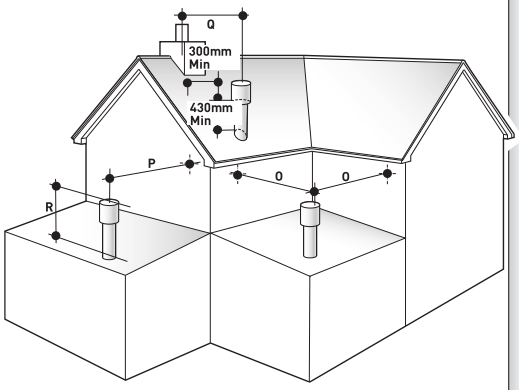

	Position	Minimum spacing	
A	Directly below an openable window, air vent, or any other ventilation opening	300mm	12in
B	Below gutter, drain/soil pipe	75mm	3in
C	Below eaves	200mm	8in
D	Below a balcony	200mm *2500mm	8in 98in
E	From vertical drain pipes and soil pipes	150mm	6in
F	From internal or external corners *internal corners	300mm *1000mm	12in 40in
G	Above adjacent ground or balcony level	300mm	12in
H	From a surface facing the terminal	600mm *2500mm	24in 98in
I	Facing terminals	1200mm *2500mm	48in 98in
J	From opening (door/window) in carport into dwelling	1200mm *not recommended	48in
K	Vertically from a terminal on the same wall	1500mm	60in
L	Horizontally from a terminal on the same wall	300mm	12in
M	Adjacent to opening	300mm	12in
N	Below carport	600mm *not recommended	24in
O	From adjacent wall	300mm	12in
P	From adjacent opening window	1000mm	40in
Q	From another terminal	600mm	24in
R	Minimum height	300mm	12in

*Recommended by the boiler manufacturing industry to prevent pluming nuisance and damage to buildings.

e) Where an open flued system is used, and the flue duct air inlet is within a compartment then high and low level air vents are necessary in the compartment, the size of the vents should be calculated in accordance with BS 5440-2 Table 2.

3.5 CONDENSATE DISPOSAL

The condensate drain connection is suitable for either 21.5 mm or 22 mm plastic push fit or adhesive overflow pipes and fittings. It should be piped to drain, preferably within the building, maintaining a continuous 2.5° fall away from the appliance. If the drain is routed to outside it should be to a drain or soak away, and any external pipe work should be in 32 mm. Insulation to protect from freezing in cold weather conditions is also advisable. Note if the appliance is installed in a garage all pipe work should be in 32 mm. Ensure that the condensate discharge system complies with any local regulations in force.

3.6 GAS SUPPLY

a) The Gas Supplier should be consulted at the installation planning stage in order to establish the availability of an adequate supply of gas.

b) An existing service pipe MUST NOT be used without prior consultation with the Gas Supplier.

c) A gas meter can only be connected by the Gas Supplier or by their contractor.

d) An existing meter and/or pipe work should be of sufficient size to carry the maximum appliance input plus the demand of any other installed appliance. (BS 6891: 1988).

A minimum of 22 mm diameter pipe work is recommended within 1000 mm of the appliance gas cock.

e) **Natural gas appliances:** The governor at the meter must give a constant outlet pressure of 20 mbar (8 in.wg) when all appliances on the system are running.

Propane appliances: The regulator must give a constant outlet pressure of 37 mbar (14.9 in.wg) when all appliances on the system are running.

f) The gas supply line should be purged. WARNING: Before purging open all doors and windows, also extinguish any cigarettes, pipes, and any other naked lights.

g) The complete installation must be tested for gas tightness.

3.7 CENTRAL HEATING SYSTEM

a) The appliances incorporate all the components necessary to allow them to be connected to a sealed central heating system. Refer to Figure 7a for a typical system design, which incorporates radiators, and a drain facility that must be provided at the lowest point in the system to allow complete drain down.

b) The installation should be designed to operate with a flow temperature of up to 95 °C.

c) A sealed system must only be filled by a competent person.

d) The available pump head for the appliances are given in Figure 6.

e) If thermostatic radiator valves are fitted, a radiator must be fitted with two lock shield valves, to enable correct operation of the pump-overrun facility.

f) The following paragraphs outline the specifications of the items fitted to the appliances.

PUMP - The available pump head shown in Figure 6 is that in excess of the appliance hydraulic resistance, i.e. that available for the system.

6 APPLIANCE HYDRAULIC RESISTANCE

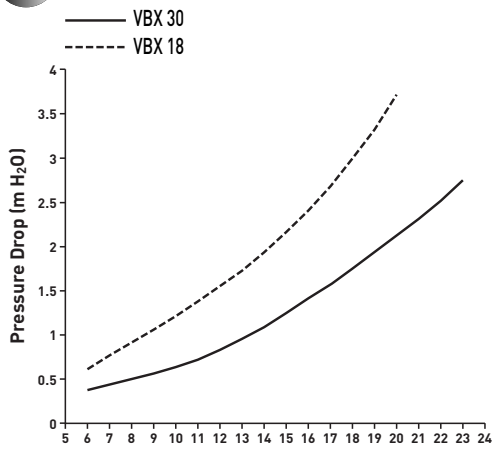

3.8 DRAINING TAP

A draining tap must be provided at the lowest point of the system, which will allow the entire system and hot water system to be drained.

Draining taps shall be to the current issue of BS 2879.

3.9 SAFETY VALVE OPEN VENTED SYSTEM

A safety valve need not be fitted to an open vented system. (See 3.16 for sealed systems)

3.10 PUMP

The pump should be fitted on the flow pipe from the boiler and have isolating valves each side.

A variable duty pump should be set to give a temperature difference of no greater than 20°C between the flow and return, with the thermostat set at "MAX", which is approximately 80° to give a flow rate as shown in table 1.

See figure 6 for pressure loss of the boiler.

High resistance microbore systems may require a higher duty pump.

3.11 FLOW RATE

If it is necessary to alter the flow rate, the system can be fitted with a lockable balancing valve in the main flow or return pipes shown as valve "A" in figure 7. The flow rate through the boiler must not be allowed to fall below that given in table 1.

Table 1. Flow Rate
MINIMUM FLOW RATE 200 l/h
This is equal to 20°C differential at minimum heat input.

3.12 WATER TREATMENT

WATER TREATMENT, CLEANSING AND FLUSHING THE HEATING SYSTEM

NOTE: British Standard BS7593: 1992 stresses the importance of cleansing and flushing of the system to ensure it continues to run efficiently with the minimum of maintenance necessary. Halstead Boilers fully support this professional approach and recommend that the system is cleansed with an effective chemical cleanser and protected long term with a suitable inhibitor. Such products are available from Fernox and Sentinal.

3.13 OPEN VENTED HOT WATER SYSTEM

The boiler must be supplied from an unrestricted water supply taken from a feed and expansion cistern situated at a maximum height of 27 metres (90ft) above the boiler.

The cold feed must be 15mm minimum size.

The vent must rise continuously and be unrestricted.

It is important that the relative positions of the pump, cold feed and open vent are as shown in figure 8.

3.14 DOMESTIC HOT WATER CYLINDER

SINGLE FEED INDIRECT CYLINDERS ARE NOT SUITABLE

The domestic hot water cylinder must be of the double feed fully indirect coil type.

3.15 SEALED HOT WATER SYSTEMS

The installation must comply with the appropriate requirements of the current issue of BS4814, BS5449, BS6759, BS6798 and BS7074 Part 1 and 2.

See figure 7 for a suggested layout.

3.16 SAFETY VALVE SEALED SYSTEM

A safety valve must be fitted to a sealed system.

It shall be preset, non-adjustable with a lift pressure of 3 bar, incorporating seating of a resilient material, a test device and a connection for drain.

The drain from the safety valve must be routed outside the building, must not discharge above an entrance or window or any type of public access area, be clear of any electrical fittings and positioned so that any discharge can be seen.

3.17 EXPANSION VESSEL

A diaphragm type expansion vessel, conforming to the current issue of BS4814 (see also BS7074 Part 1 and 2) must be connected at a point close to the inlet side of the circulating pump, see the diagrammatic layout, figure 7 unless laid down differently by the manufacturer.

The expansion vessel volume depends on the total water system volume and the initial system design pressure. For any system an accurate calculation of vessel size is given in the current issue of BS5449 and BS7074 Part 1.

Example: For an initial design pressure of 0.7 bar, the minimum total vessel volume required is 0.063 x Total System Volume.

Expansion Vessel Requirements

Vessel charge and initial system pressure	bar	0.5	0.75	1.0	1.5
Total water content for system using 8L (1.54 gal) capacity expansion vessel supplied with appliance	L	96	84	73	50
For systems having a larger capacity, multiply the total system capacity in litres (gallons) by these factors to obtain the total minimum expansion vessel capacity required in litres.		0.0833	0.093	0.109	0.156

Note: A higher initial design pressure requires a larger volume expansion vessel.

The charge pressure must not be less than the static head of the system, that is, the height of the highest point of the system above the expansion vessel.

The water content of the boiler is given in 2.3 General Specifications.

3.18 PRESSURE GAUGE

A pressure gauge with a set pointer and covering at least 0 to 4 bar (0 to 60 lb/in) shall be fitted permanently to the system in a position where it can be seen when filling the system.

3.19 WATER MAKEUP

Provision should be made for replacing water loss from the system using a make up bottle mounted in a position higher than the top point of the system, connected through a non-return valve to the return side of either the heating circuit or the hot water cylinder.

Alternatively, provision for make up can be made using a filling loop.

3.20 FILLING A SEALED WATER SYSTEM

Provision for filling the system at low level must be made, see figure 8. There must be no permanent connection to the mains water supply, even through a non-return valve.

CONTROLS. As a minimum it is recommended that a room thermostat be installed to control the appliance. Thermostatic radiator valves may be fitted to the system, however they must not be fitted in the room where the room thermostat is fitted. There must be at least one radiator installed with lock shield valves that should not be closed. Further guidance can be obtained from the Domestic Heating and Hot Water Guide to the building regulations.

7 SEALED WATER SYSTEM

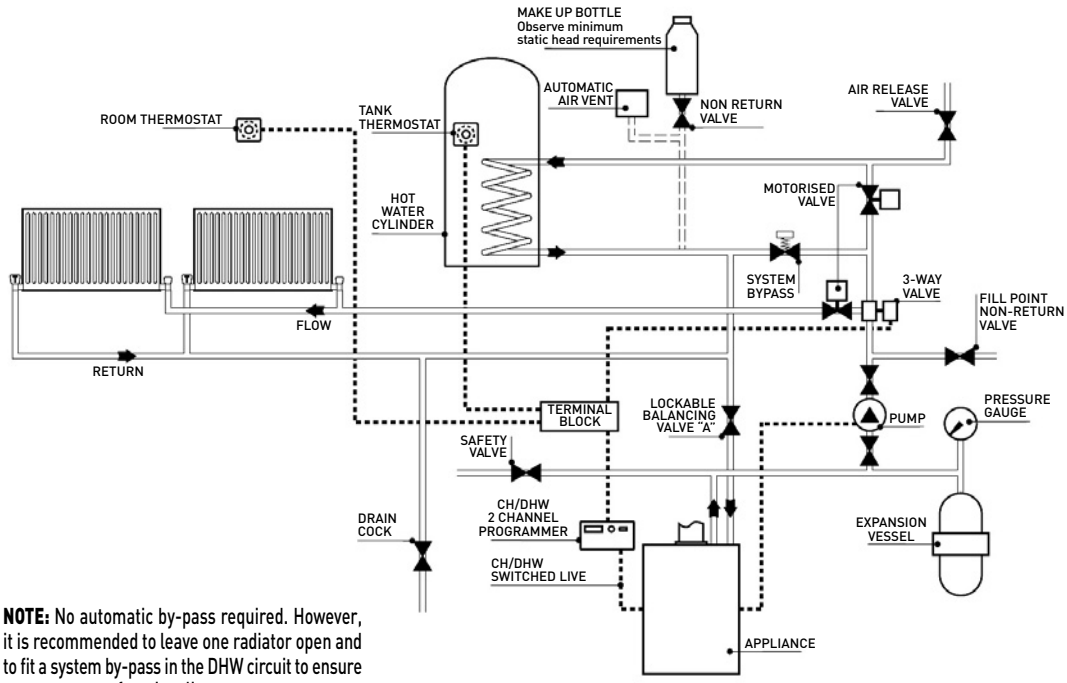

NOTE: No automatic by-pass required. However, it is recommended to leave one radiator open and to fit a system by-pass in the DHW circuit to ensure pump over-run functionality.

3.21 ELECTRICITY SUPPLY

a) Wiring external to the appliance must be in accordance with the current I.E.E Wiring regulations (BS 7671) for electrical installation and any local regulations, which apply.

b) The mains cable must be at least 0.75 mm2 (24/0.2 mm) PVC insulated to BS 6500 table 16.

c) **THIS APPLIANCE MUST BE EARTHED.** Failure to provide a satisfactory earth connection will result in appliance malfunction.

The VBX appliances may be used with any certified programmer/room thermostat, as described in section 4. For further information contact: Halstead Glen Dimplex service helpline Tel: 0844 371 1111.

3.22 EXTERNAL CONTROLS

d) The method of connection to the mains supply must facilitate complete electrical isolation of the appliance. Either a 3A fused three pin plug and un-switched shuttered socket outlet, both complying with BS 1363, or a 3A fused double pole switch having a 3 mm contact separation in both poles and serving only the boiler (and its external controls) may be used.

8 **OPEN VENT WATER SYSTEM** with flow and return connected to bottom pipes

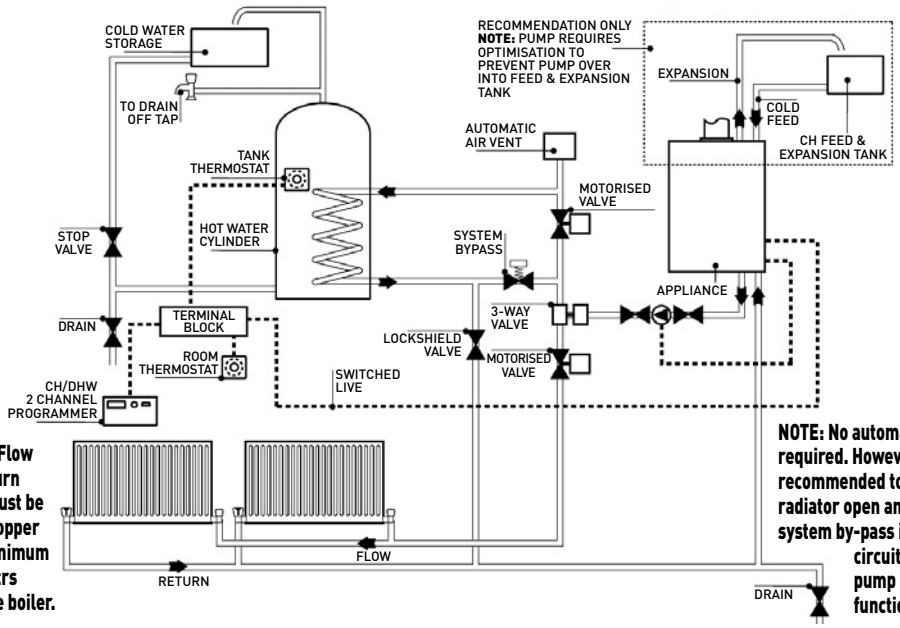

NOTE:- Flow and return pipes must be run in copper for a minimum of 1.5mtrs from the boiler.

NOTE: No automatic by-pass required. However, it is recommended to leave one radiator open and to fit a system by-pass in the DHW circuit to ensure pump over-run functionality.

OPEN VENT WATER SYSTEM with flow and return connected to top pipes

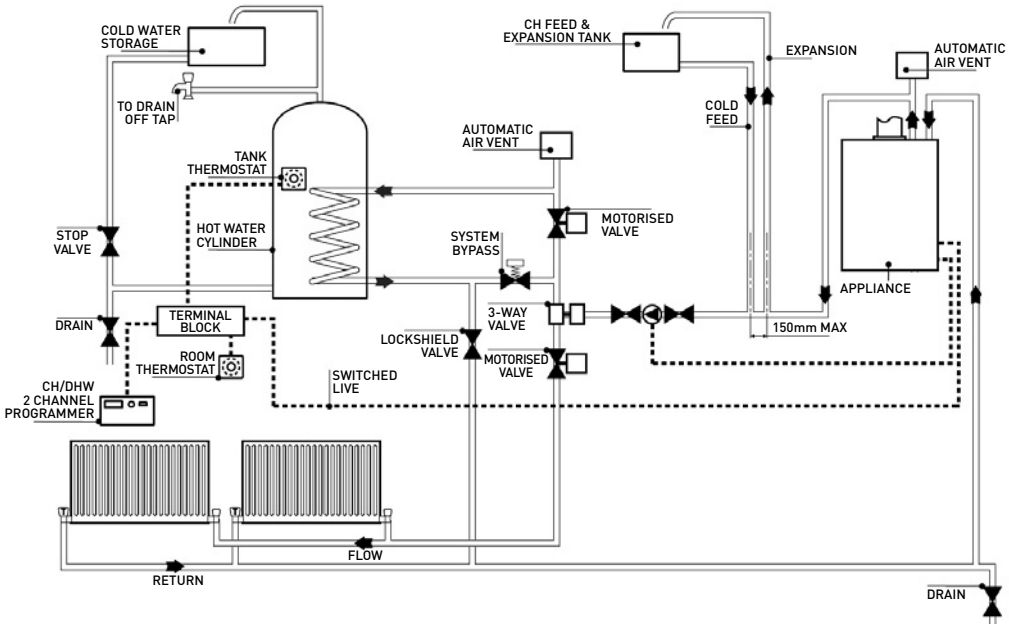

4 APPLIANCE INSTALLATION

Before installing the appliance, check that the chosen location is suitable (section 3.2) and that the requirements for flue position (section 3.3) and minimum clearances (Figure 1b) are satisfied.

4.1 UNPACKING THE APPLIANCE

The appliance is supplied in one box. Flue kits are provided separately, the various flue kits available as described in sections 2.5 - 2.7. If the appliance is to be installed without access to an external wall, a wall liner kit is also required.

Unpack the boxes and check the contents:

- Complete appliance
- Paper wall mounting template
- Wall mounting plate
- Installation and Servicing Instruction
- User's Instructions
- Warranty Card
- Hardware pack containing:

  50mm x No 10 Wood Screws - 4 off
  Rawl Plug to suit - 4 off

Manual Handling Note:
During the appliance installation it will be necessary to employ caution and assistance whilst lifting, as the appliance exceeds the recommended weight for a one-man lift. Take care to avoid trip hazards, slippery or wet surfaces.

4.2 PREPARING THE WALL

a) Fix the paper template in the required position (ensuring that the necessary clearances are achieved). Ensure squareness by hanging a plumb line.

b) Mark the position of the wall mounting plate-fixing holes (4). Select one from each group. Refer to Figure 10.

c) Mark the position of the flue outlet. For side flue installation extend the flue centre line on to the sidewall, where the flue length exceeds 775 mm, a flue slope angle of 2.5° needs to be taken into account. Refer to Figure 10. Remove the paper template.

d) Cut the hole in the wall for the air/flue duct (preferably with a core-boring tool). The hole must be horizontal and not be less than 100 mm in diameter. If the hole is not accessible from outside, its minimum diameter must be sufficient to allow insertion of the wall liner (130 mm, 5in). The wall liner is available as an optional extra and must be sealed in position with mortar (or equivalent).

e) Drill the four fixing holes using a 6mm drill and insert the wall plugs provided.

f) Hang the wall mounting plate using two fixing screws in the top, ensuring that it is level.

4.3 MOUNTING THE APPLIANCE

Refer to Figure 10.

a) Lift the appliance into position approximately 10 mm above the top of the wall mounting plate and use the side wings on the plate to locate the appliance in a horizontal direction. Then carefully lower the appliance, ensuring that the top locating rail is securely engaged.

b) Connect the central heating system pipes to the central heating flow and return pipes on the boiler.

Pipe work may be routed from above or below the appliance as required.

9

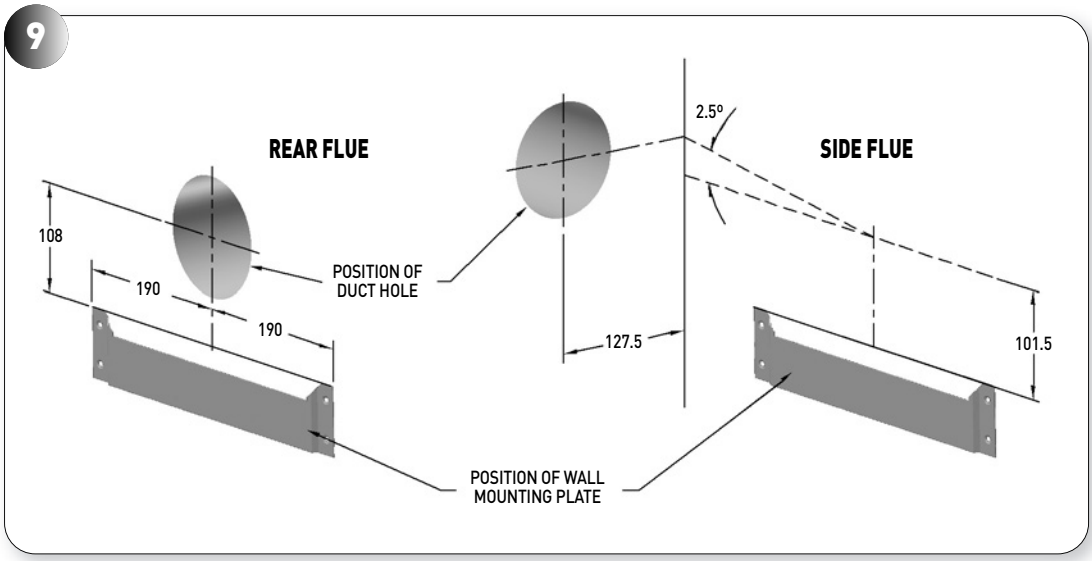

10 MOUNTING THE APPLIANCE

4.4 CENTRAL HEATING SERVICE CONNECTIONS

Refer to Figure 11.

a) The boiler is supplied with 22mm copper tails for both upwards and downwards (optional) flow and return pipe routing suitable for compression or soldering connections.

USE EXTREME CARE IF SOLDERING THE JOINTS NEAR TO THE APPLIANCE. IF BOILER IS LOCATED IN TIGHT SPACE IT IS RECOMMENDED TO REMOVE THE PIPES FROM THE BOILER.

b) Connect the central heating system pipes to the central heating flow and return pipes on the boiler. If downwards routing is required: The sealed ends must be removed before connecting to the heating system pipes. The upwards pipes must be used for connecting to a vent pipe (open system) or fitting to an automatic air vent (sealed system). The remaining pipe must be solder sealed.
The flow and return sensors have to be removed from the upwards pipes and reconnected to the downward pipes (Fig 47; flow is nearest to the front).

c) Commission the central heating system as described in section 5.1, and then proceed to section 4.5.

11 SERVICE CONNECTIONS

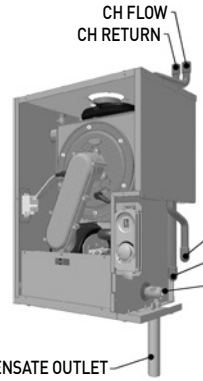

4.5 GAS CONNECTION

Refer to Figure 11.

Connect the gas supply pipe to the gas service cock. It is recommended that a minimum of 22 mm diameter OD copper pipe be used to within 1000 mm of the gas service cock.

4.6 CONDENSATE CONNECTION

Refer to Figure 12.

Connect either a Ø21.5mm or Ø22mm plastic push fit or adhesive overflow pipe to the condensate outlet. It should be piped to drain, preferably within the building, maintaining a continuous 2.5° fall away from the appliance. Note; if an additional "U" trap is fitted between the appliance and the discharge point, then a visible air break is necessary between the appliance and trap, because a trap is already provided within the appliance. Ø32mm pipe should be used for external pipe work, or if the appliance is installed in a garage. If the drain is routed externally to a drain or soak away, then the external length should be kept as short as possible and not exceed 3000 mm. Protection from freezing in cold weather conditions is also advisable. Ensure that the condensate discharge system complies with any local regulations in force.

12 CONDENSATE CONNECTIONS

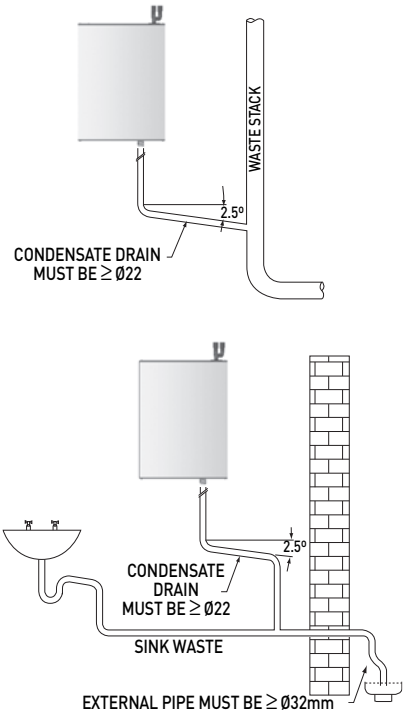

In exceptional circumstances, such as when a boiler is installed in a basement without drainage, it may be necessary to install a condensate pump to carry condensate up to ground/drain level. Such products are available from Grundfos Pumps Ltd on: 01525 850000 and Pump House on: 0115 922 2211.

4.7 AIR/FLUE DUCT INSTALLATION

For correct flue installation please refer to the installation instructions that are provided with the individual flue kit as described in sections 2.5 - 2.7.

a) Measure the required flue length as shown in Figure 13. Refer to section 2.5 to determine whether any extension kits are required. Installations using only the standard ducts or standard ducts with straight extensions are described in this section. Installation instructions for all other flue systems are included in the various flue kits.

b) Ensure that all (inner and outer tube) sealing rings are provided and assemble the air/flue ducts as shown in the flue instructions.

c) Construct the correct flue length by building the flue out from the appliance. **Ensure that the flue and air seals are correctly fitted before assembly and that each section is fully engaged.**

The flue length is measured from the centreline of the appliance flue outlet to the inside of the external wall-sealing ring. In most cases it will be possible to achieve the required flue length without cutting the ducts, however where necessary the plain ends of the extension ducts may be cut. Never cut the swaged end, and always ensure that the cut is square and free of burrs or debris.

NOTE IT IS ESSENTIAL THAT THE TERMINAL IS FITTED THE CORRECT WAY UP.
See flue kit Instructions (i.e. rain shield at the top).

13 **MEASURING THE EXACT FLUE LENGTH**

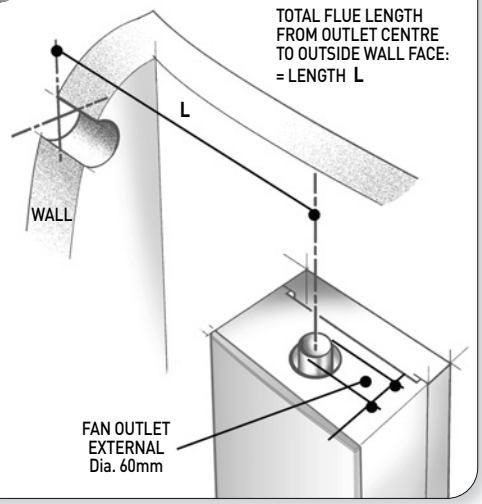

4.7.1 INSTALLING THE AIR/FLUE DUCT FROM INSIDE THE ROOM

Wall thickness up to 800 mm (31in) only.

a) Push the terminal through the wall liner taking care to ensure that the terminal is the correct way round and the external wall-sealing ring does not become dislodged.

b) Assemble the flue system extension ducts as necessary, referring to Figure 14.

c) Pull the flue system towards the appliance to seat the external sealing ring against the outside wall, ensuring that the duct joints are not disturbed.

d) Use the internal sealing ring to make good the internal hole, and check that the terminal is correctly located on the outside wall (Where possible this should be visually checked from outside the building.) Figure 14 shows a view of the flue system, correctly installed.

e) Finally locate and secure the elbow to the appliance using the four screws provided.

4.7.2 INSTALLING THE AIR/FLUE DUCT FROM OUTSIDE THE BUILDING

(Flue hole diameter 100 mm - wall liner not necessary)

a) Secure the flue elbow with seal to the appliance using 4 screws.

b) Fit external wall sealing ring over flue and then from outside the building, push the flue system through the wall taking care to ensure that the terminal is the correct way around.

c) Loosely fit the internal wall sealing ring over the inside end of the flue.

d) Assemble the flue system extension ducts as necessary, referring to the flue kit instructions, and fit to the flue elbow.

e) Fit the flue terminal to the flue system, ensuring that the duct joints are not disturbed, and that the external sealing ring is seated against the outside wall.

f) Finally use the internal sealing ring to make good the internal hole. Check that the external wall sealing ring and the terminal is correctly located, on the outside wall from outside the building.

14 **INSTALLING THE FLUE SYSTEM FROM INSIDE THE ROOM**

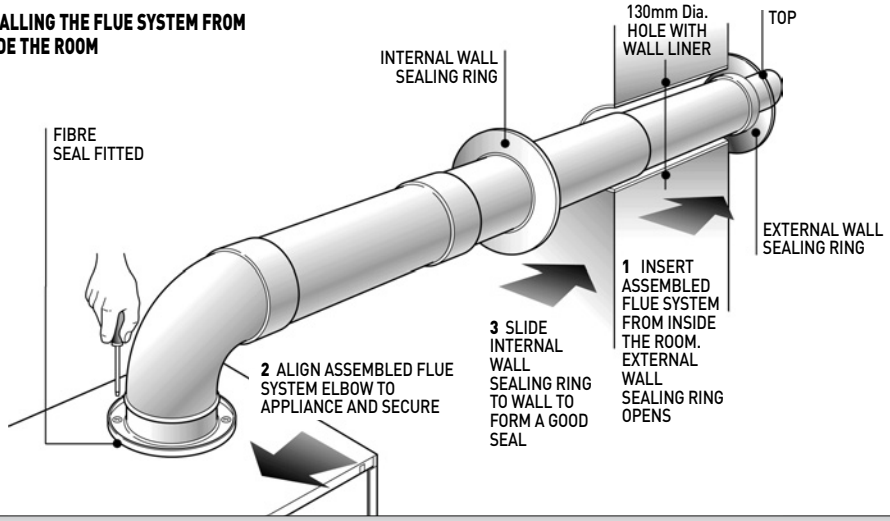

4.8 ELECTRICAL CONNECTIONS

Connect the electricity supply and external controls (using suitable mains cable) as follows:

Wire the cable(s) into the appropriate connections in the electrical plug provided, referring to Figure 15. Live supply to L1, Neutral and Earth as indicated. Check that L2 and L3 are linked.

To provide correct cable retention, fit the piece of tubing supplied over the cable as it passes through the clamping arrangement. The cable will be held in position as the plug cover is fitted.

If a programmer/room thermostat is to be fitted remove the red link between L2 and L3 and connect the device across these terminals. Any external controls fitted must be rated at 230V 50Hz and have volt free contacts.

15

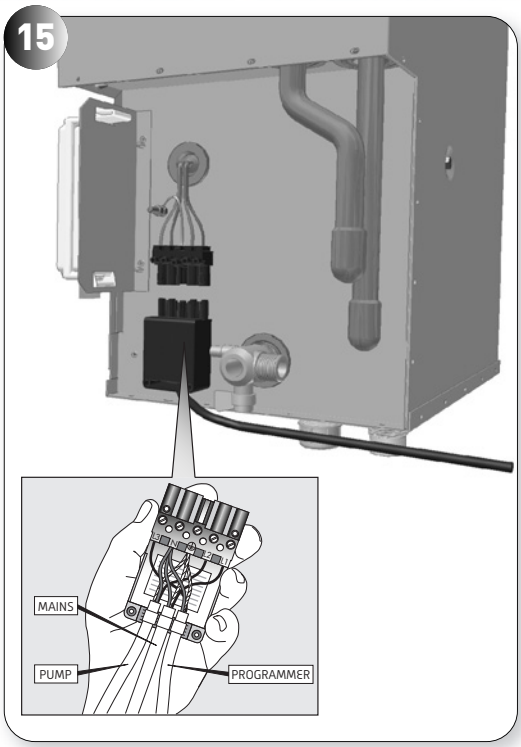

16 FULLY PUMPED 'S' PLAN

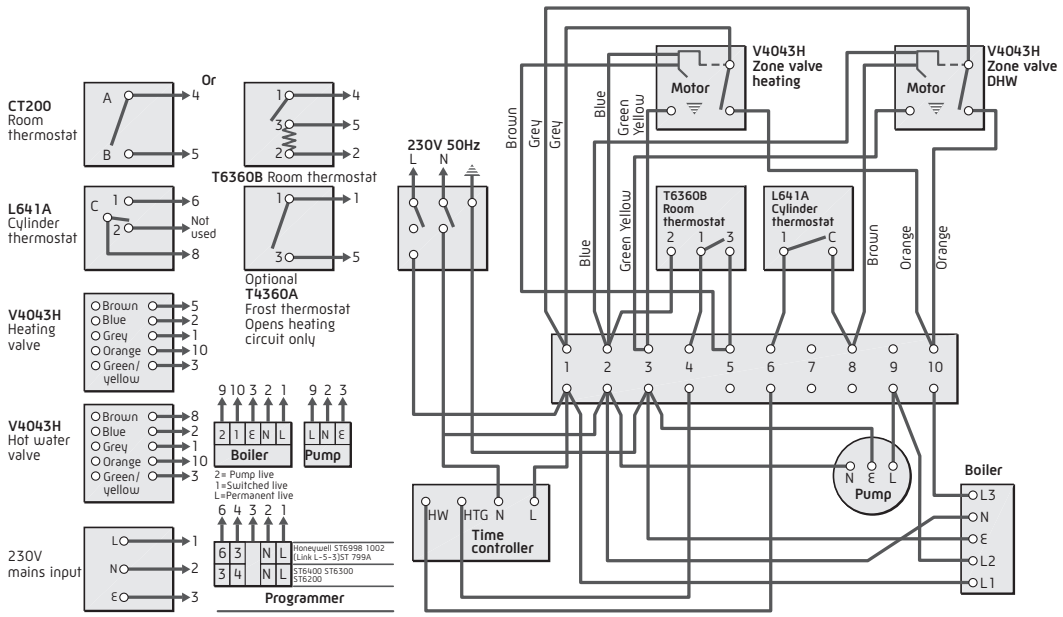

17 FULLY PUMPED 'Y' PLAN

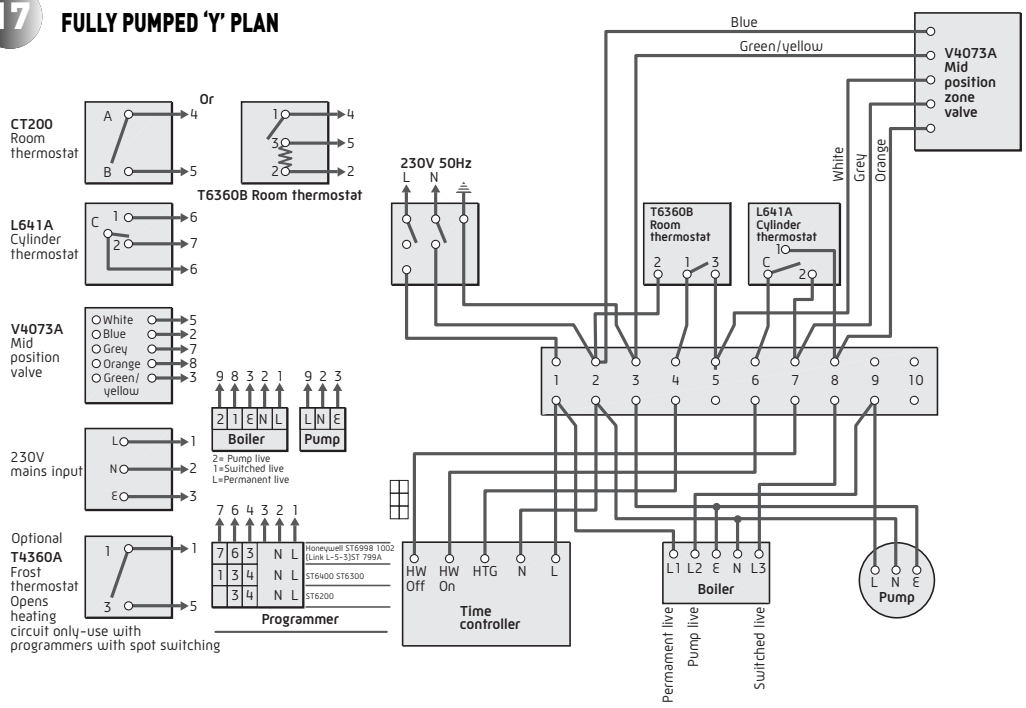

18 UPP15-50 PUMP PLAN WIRING CENTRE CONNECTIONS

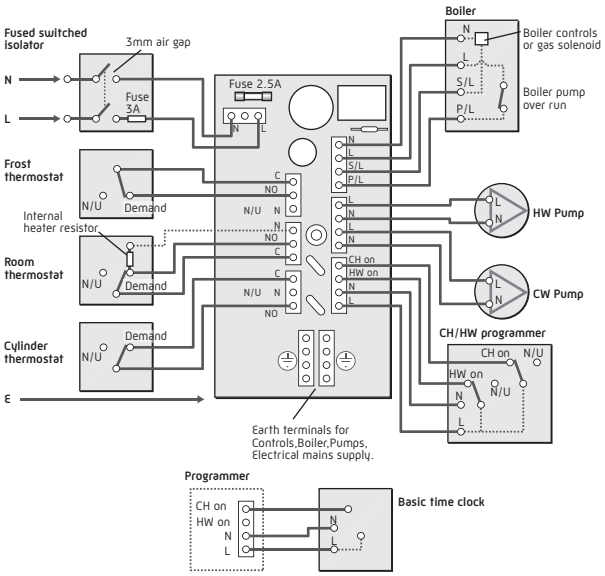

19 TYPICAL PROGRAMMER

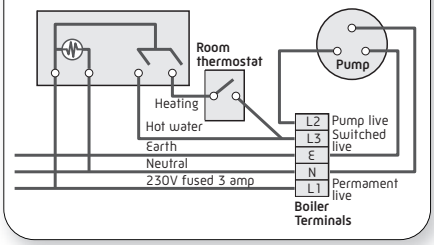

5 COMMISSIONING & TESTING

5.1 FILLING THE WATER SYSTEM

Before commissioning the appliance, the whole gas installation including the meter MUST be purged and tested for gas tightness in accordance with BS 6891: 1988.

Open all doors and windows, extinguish naked lights, and DO NOT SMOKE whilst purging the gas line.

Before commencing the commissioning procedure, ensure that the gas service cock is turned on, the electricity supply is isolated, and that the CH pipe-work is complete. Fill the water systems by following the procedure detailed below in steps a) and b), and referring to Figure 20.

It is recommended, where possible, to flush the CH system without the appliance fitted, to avoid debris and flux blocking the waterways within the appliance.

20

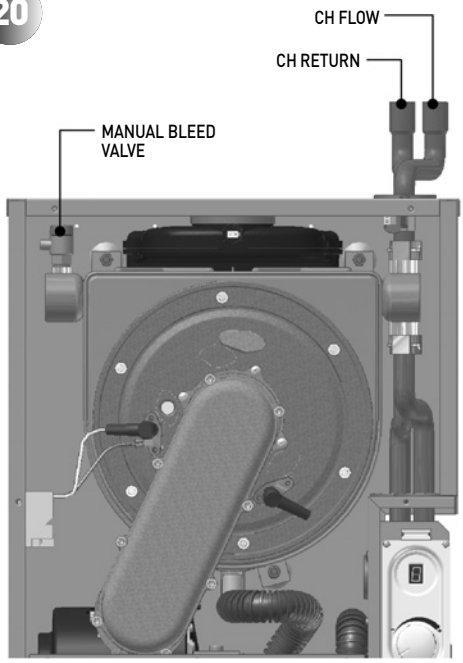

a) All Systems

A competent person in accordance with the current issue of BS6798 should carry out commissioning.

Fill the system with cold water. Vent the system via the radiator valves and system air vents in accordance with normal practice. Ensure that all system air vents are closed.

To aid venting, a manual air vent is provided on the LHS of the heat exchanger.

Check the system for soundness.

Drain the entire system to flush out any debris, and refill making sure that all the air is properly vented from the system and pump. Repeat this instruction with the system hot. It is recommended that the system be cleaned with a recognised system cleaner such as Fernox or Sentinel.

Prior to lighting the appliance to check the gas rates, the central heating system should be checked for circulation by operating the appliance with the gas turned off, this is to ensure that no air locks occur. The appliance may go into ignition lockout and require resetting.

b) Sealed Systems

Fill the system until the pressure gauge registers 2.0 bar. Clear any locks and check for soundness.

Check the operation of the pressure relief valve (figure 21) by lifting the lever on the valve gently to ease the valve of its seat. Checking that water is discharged, release the lever and ensure that the valve seats correctly and does not leak. Where this is not possible a manual check should be carried out.

Release the cold water to the initial design pressure.

Do not use the pressure relief valve to drain the system, because dirt or debris could prevent the valve seating correctly. If the valve leaks or sticks closed, then replace it.

21

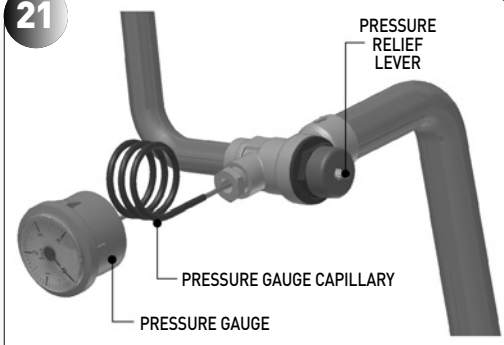

NOTE
THESE COMPONENTS ARE NOT SUPPLIED BY HALSTEAD BOILERS LTD.

5.2 COMMISSIONING THE APPLIANCE

Refer to Figure 22

a) Slacken the screw in the appliance inlet pressure test point and connect a suitable manometer. Refer to Figure 23.

b) Check that the gas supply is turned ON and the gas service cock is OPEN.

c) Switch on the electrical supply.

d) Turn the CH temperature Control knob to the midpoint between the minimum and maximum setting. The display changes from '⌂' to 'h'.

e) Ensure programmer and room thermostat (if fitted) are calling for heat.

f) The display changes to 'H'. The fan should start and after a few seconds an ignition will commence.

g) If the burner fails to light the fan will stop. Initially this may be due to air in the gas supply line. The boiler will automatically have five attempts at ignition. It may be necessary to turn the CH Temperature Control knob fully anti-clockwise to reset position and repeat (d). (See section 5.4).

h) When the boiler has lit the display will show 'H.'. Allow the appliance to run for at least 10 minutes and check that the gas supply pressure measured at the appliance inlet pressure test point is 20 ± 1 mbar for natural gas, and 37 ± 1 mbar for propane appliances.

5.3 FINAL CHECKS

a) Turn off the appliance and remove the manometer. Tighten the appliance inlet pressure test point screw. Re-light the burner and test for gas tightness.

b) Fit the appliance casing as illustrated in Figure 24. Position and secure both side panels and the decorative front cover with screws at the top and bottom.

c) Fit the appliance hinged front panel in position with two screws at the top and bottom.

d) Set the CH Temperature Control to the required setting. Set the room thermostat (if fitted) to the required setting. Refer to hot water cylinder instructions.

If the boiler is connected to a hot water cylinder the CH temperature has to be set to high.

5.4 LOCKOUT / RESET INDICATION

In the event of failure during an ignition sequence, (5 attempts) the LED displays fault code '3'. In order to reset the boiler turn the CH Temperature Control anticlockwise to 'STANDBY' position and then back to 'ON' within **two** seconds.

22 FASCIA PANEL AND CONTROLS

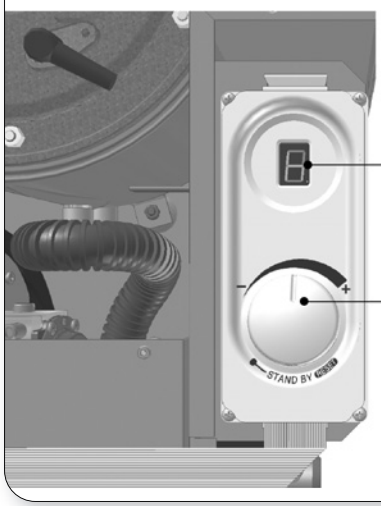

23 INLET PRESSURE TEST POINT

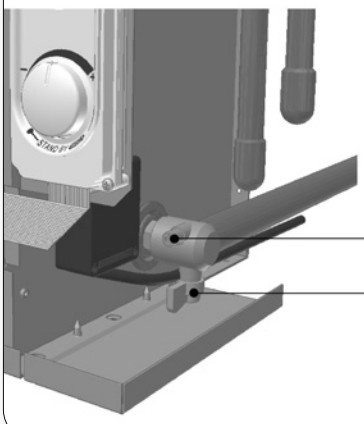

5.5 FROST PROTECTION

The appliance is fitted with a frost protection device. In the event of very cold conditions, the external pump may operate and the appliance light for a few minutes to protect the appliance and system from potential frost damage. This can only function if the gas and electricity supplies are maintained.

5.6 OVERHEAT PROTECTION

The appliance incorporates flow and return thermostats, which monitor the operating temperature. Abnormal temperatures such as overheating will cause the appliance to go to lockout and the LED display will show code '1'. Allow the appliance to cool and turn the CH Temperature Control knob fully anti-clockwise to the reset position to clear.

5.7 OTHER FEATURES

The following additional features are included in the appliance specification:

ANTI-CYCLE DEVICE:
When the appliance cycles on its central heating control thermostat, a slow cycle device operates. The timer (set to 5 minutes) is activated after the end of each burn cycle to prevent rapid cycling of the burner.

CH SOFT START DEVICE:
After every burner start the burner output stays at low for 3 minutes, to ensure smooth heat up of the system and maximum efficiency.

SERVICE MODE:
The appliance enters the SERVICE mode by turning the control knob fully clockwise. The LED displays a flashing 'H.'. In this mode the appliance runs at the minimum CH output. This mode allows the boiler emissions to be measured.

24 CASING

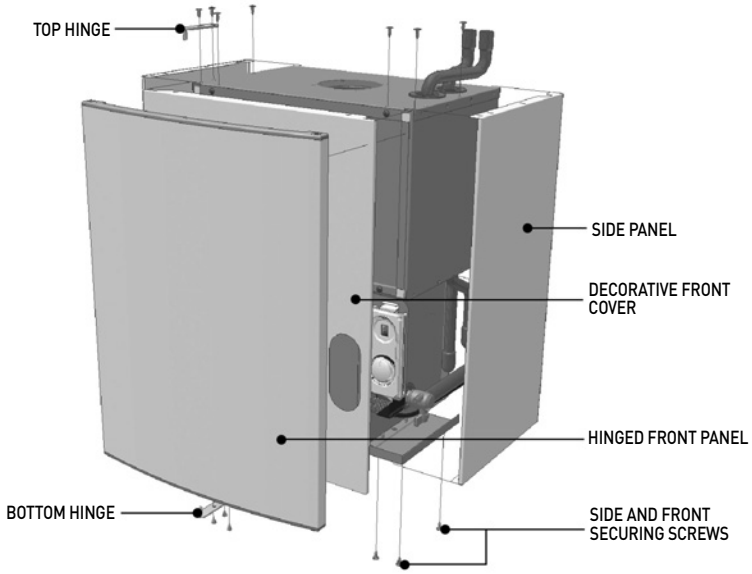

5.8 USER INSTRUCTIONS

Upon completion of commissioning and testing the system, the installer must instruct the user in how to operate the appliance by drawing the user's attention to the following.

a) Give the 'Users Instructions' to the householder and emphasise their responsibilities under the 'Gas Safety (Installation and Use) Regulations or rules in force.

b) Explain and demonstrate the lighting and shutdown procedures.

c) Advise the householder on the efficient use of the system, including the use and adjustment of all system controls for CH.

d) Advise the user of the precautions necessary to prevent damage to the system, and to the building, in the event of the system remaining inoperative during frost conditions.

e) Explain the function of the CH Temperature Control knob, and how to reset the appliance. Emphasise that if cutouts persists, the appliance should be turned off and the installer or service engineer consulted.

f) Stress the importance of an annual service by a registered heating engineer.

g) The electrical mains supply to the appliance must remain ON for the frost protection circuit to operate.

5.9 APPLIANCE LOG BOOK

A logbook is supplied with this appliance to record installation and commissioning details and to make future servicing of the appliance easier. The logbook is found at the rear of this Installation and Servicing Instruction manual.

This logbook forms part of the industry's Benchmark code of practice for the installation, commissioning and servicing of central heating systems.

Please ensure that the logbook is fully completed and left with the customer for future reference, along with Users Instructions and this Installation and Servicing Instruction manual.

5.10 GAS CONVERSION

Appliances may be converted from one gas group to another. It is possible to convert between Propane and Natural gas by use of conversion kits. The kits comprise the following:

Propane to Natural Gas

Kit Numbers
955128 - Eden Vbx 18
955126 - Eden Vbx 30
Conversion Instructions
Gas Control Valve
Data Badge (Natural Gas)
Boiler Chip Card Nat Gas
Cork Gasket
Polydome Badge (Natural Gas)

Natural Gas to Propane

Kit Numbers
955129 - Eden Vbx 18
955127 - Eden Vbx 30
Conversion Instructions
Gas Control Valve
Data Badge (Propane)
Boiler Chip Card Propane
Cork Gasket
Polydome Badge (Propane)

Instruction on how to convert the appliance is given in the conversion instructions supplied with these kits. However, particular attention should be given to the fitting of the gas valve and the use of the Boiler Chip Card (BCC).

For further information contact: Halstead Glen Dimplex service helpline Tel: 0844 371 1111.

6 ROUTINE SERVICING

To ensure continued efficient operation of the appliance, it is recommended that it is checked and serviced as necessary at regular intervals. The frequency of servicing will depend upon the particular installation conditions and usage, but in general once a year should be adequate. It is the law that a competent person, such as British Gas or other CORGI registered personnel, must carry out any service work.

Service the appliance by following the full procedure detailed below:

6.1 COMBUSTION CHECK

The appliance incorporates a flue sampling point on the appliance flue elbow, or appliance vertical flue adaptor. If the service engineer has suitable equipment to analyse the flue gas, the sampling cap may be removed and an adequately sized sample tube fitted. Operate the appliance in Service mode, (see section 5.7). After ten minutes operation check the CO_2 /CO values and compare with those figures stated in section 2.3. If the combustion figures are not within the limits shown in section 2.3 refer the section 9.3.1 Combustion check set-up.Do not forget to replace the sampling cap after use.

When the appliance is operating at maximum output check that the gas supply pressure is 20.0 mbar, using the inlet pressure test point, located on the gas cock.

Before commencing any service operation, ISOLATE the mains electrical supply, and TURN OFF the gas supply at the main service cock.

6.2 GAS CONTROL, VALVE, FAN & BURNER ASSEMBLY

Refer to Figures 25, 26, 27, and 28

a) Remove the hinges and take off the hinged front panel.

b) Remove the decorative front cover (4 screws).

c) Remove the sealed chamber door (6 screws)

d) Disconnect the igniter plug, earth lead and detection plug from the igniter and detection electrodes.

25 CONTROL PANEL

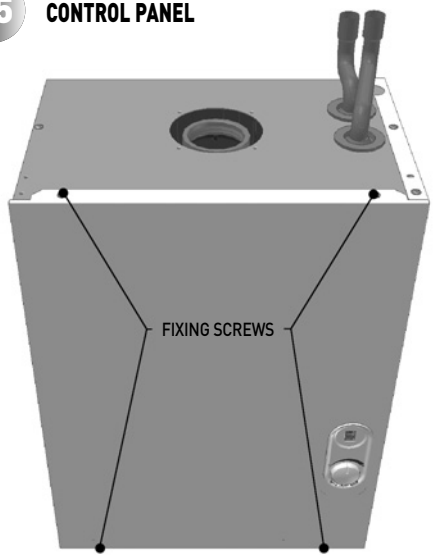

e) Unscrew the screw holding the gas valve lead plug, and disconnect the plug.

f) Disconnect the electrical leads from the fan (2 plugs).

g) Undo the nut holding the gas valve feed pipe to the gas isolating cock, and disconnect.

h) Remove the gas control valve, fan & burner assembly, by carefully pulling forward the combustion chamber front and rotating the assembly anticlockwise so that the burner points forward, then disengage the gas valve feed pipe from the casing, by lifting up the assembly. Take care not to damage the insulation.

i) The assembly may then be inspected.

j) Re-assemble in reverse order.

6.3 BURNER

Inspect, and if necessary clean the main burner ports using a soft brush or vacuum cleaner. Do not use a wire brush or any abrasive material.

6.4 IGNITION & DETECTION ELECTRODES

a) Inspect the ignition and detection electrodes in situ. If necessary, clean using a soft brush. If either the electrode or the ceramic insulation shows signs of damage or wear, replace the electrode(s) and their gasket.

b) Check that the alignments of the ignition and detection electrodes are correct. Refer to Figure 29. Adjust by carefully bending the tip of the electrode rod whilst supporting the base of the rod. Do not put any pressure on the ceramic insulation.

26 COMBUSTION CASE PANELS

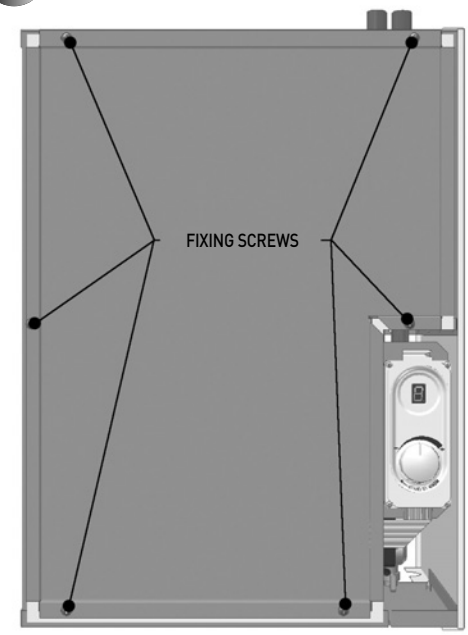

27

VBX

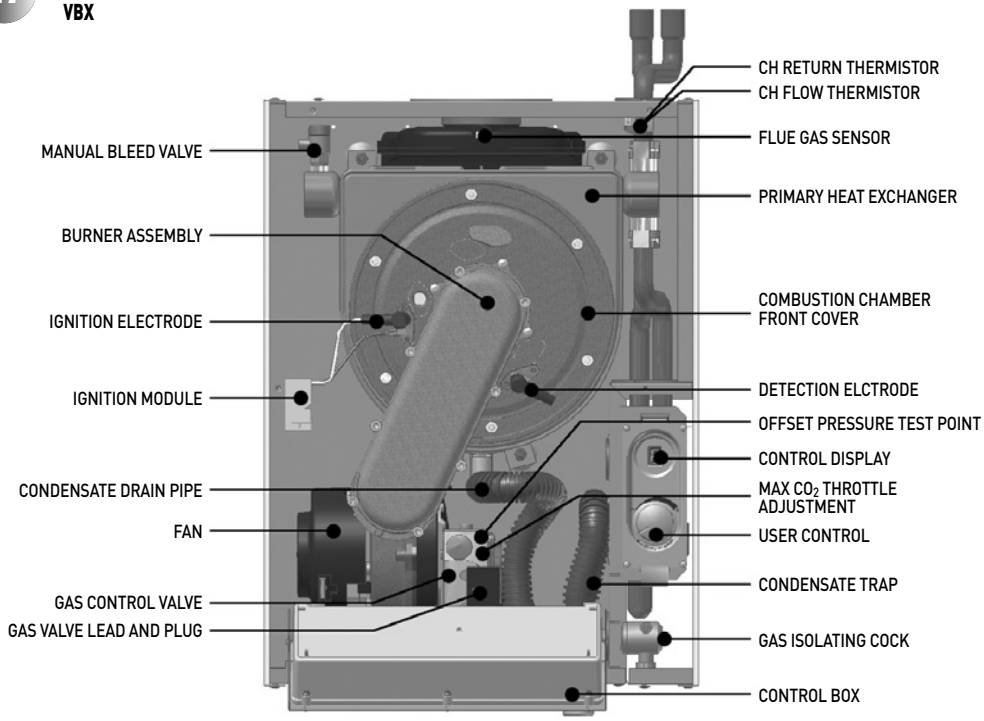

28

GAS CONTROL VALVE, FAN & BURNER ASSEMBLY

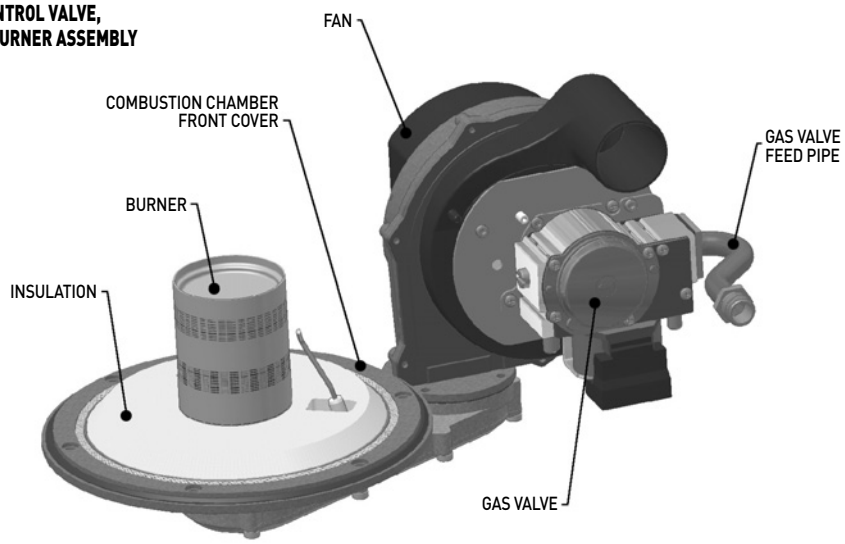

6.5 COMBUSTION CHAMBER & HEAT EXCHANGER

Inspect the inside of the combustion chamber for debris. If necessary, clean the inside of the tubes with a soft brush. Do not brush the insulation at the rear, check the integrity of the combustion chamber insulation panels, if damaged they will require replacement.

6.6 CONDENSATE DRAIN

The condensate Drain has a removable cap, Figure 30, which allows the removal of debris that may be caught within it. Place a bowl under the cap to catch the condensate and remove the cap. Any debris inside will be expelled at this point. Replace the cap ensuring a good seal is made. Discard the condensate and debris.

29 29A SPARK ELECTRODE

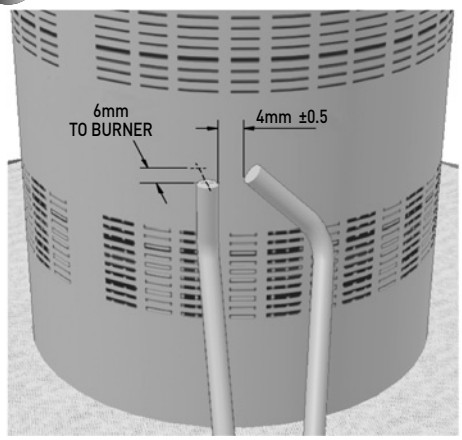

29B DETECTOR ELECTRODE

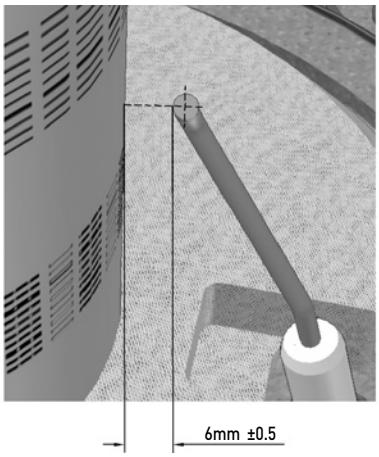

30 CONDENSATE DRAIN

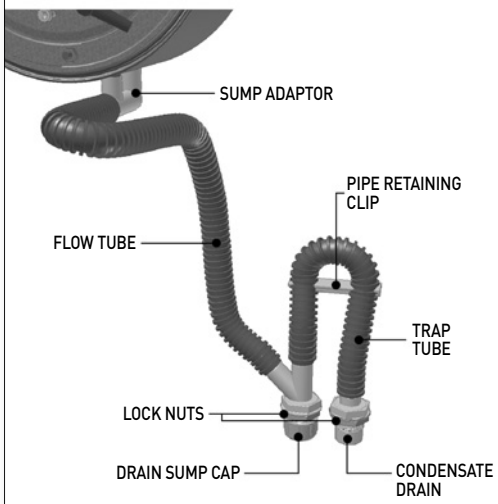

6.7 SEALED WATER SYSTEM

a) Check the operation of the pressure relief valve as described in section 5.1 (b).

b) Check the correct operation of the pressure gauge by noting the reading when cold and check that the pressure increases with temperature. Replace the gauge if readings are suspect.

c) Check that the system is at its original (cold) design pressure. If necessary, re-pressurise the system as described in section 5.1 (b) and search for and rectify any leaks causing loss of water.

d) In case of heavy pressure fluctuations during the heat and cool down cycle, check the pre-charge pressure of the expansion vessel. If the air pressure is less than 0.75 bar recharge vessel with an air pump.

6.8 RE-ASSEMBLY & RE-COMMISSIONING

a) Re-assemble all components in reverse order.

b) Check that all joints and seals are correctly fitted.

c) Turn on the gas and electricity supply and light the appliance, as described in section 5.2.

d) Re-perform a combustion check, as described in section 6.1.

e) Check the operation of the appliance in CH mode.

f) Remove the manometer and tighten the inlet pressure test point sealing screw.

g) Test for gas tightness.

6.9 FINAL CHECKS

a) Ensure the sealed chamber door is secure with the six fixing screws.

b) Re-fit all decorative casing panels.

c) Return all appliance and external controls (if fitted) to their original settings.

7 INTERNAL WIRING DIAGRAMS

31

7.1 FUNCTIONAL FLOW WIRING DIAGRAM

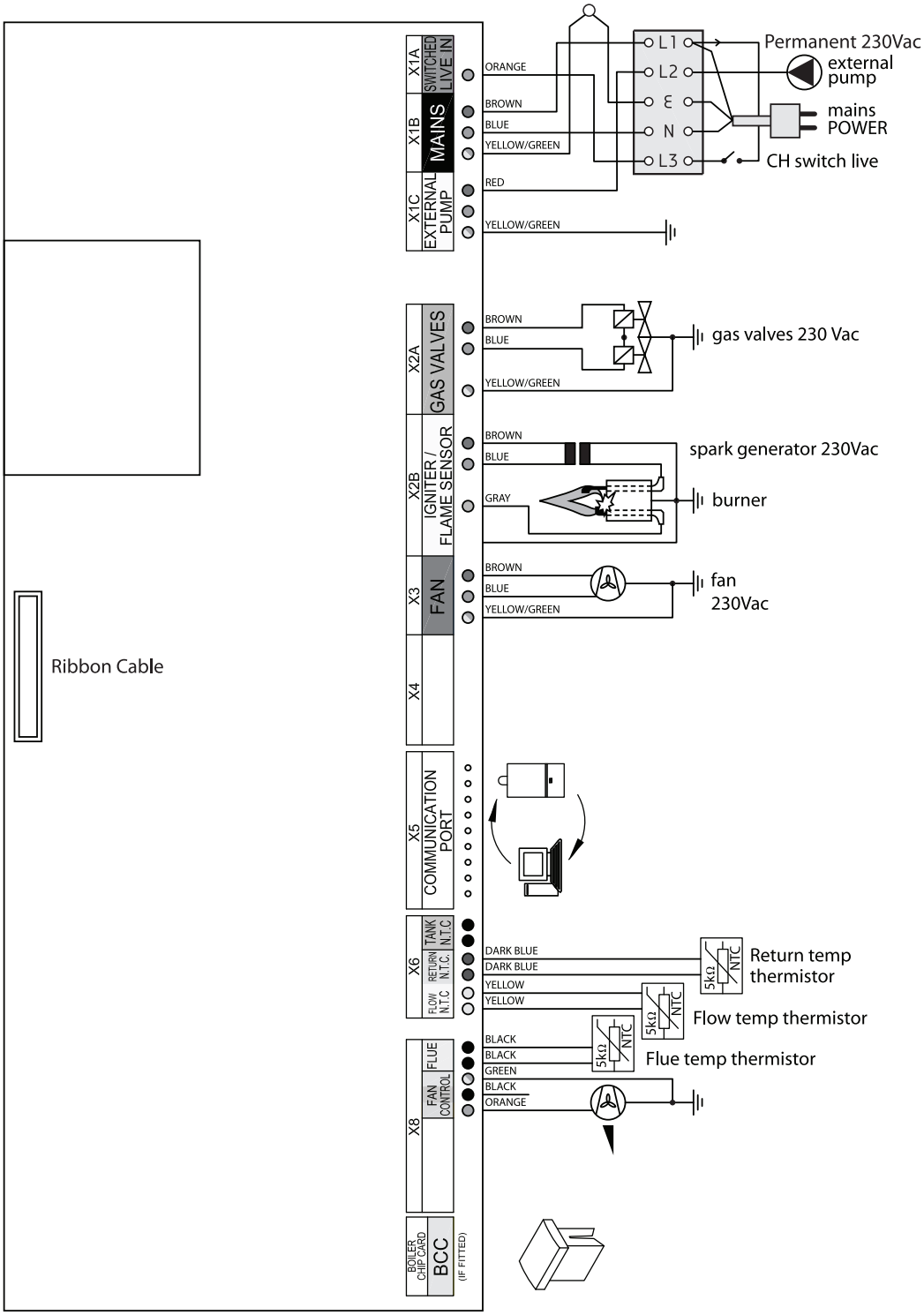

8 FAULT FINDING

8.1 GENERAL

Before looking for a fault condition, check that:

- The mains electrical supply is turned on.
- The room or cylinder/tank thermostat (where fitted) are calling for heat.
- The gas service cock is open.
- The system is at design pressure.

Before attempting any electrical fault finding, always conduct the preliminary electrical system checks as described in the Instructions for the British Gas Multimeter, or other similar instrument.

On completion of any service or fault finding operation involving making or breaking electrical connections, always check for EARTH CONTINUITY, POLARITY and RESISTANCE TO EARTH.

Detailed procedures for replacing faulty components are described in section 9 (Parts Replacement).

For further information contact: Halstead Glen Dimplex service helpline Tel: 0844 371 1111.

8.2 DIAGNOSTIC LED INDICATORS

FASCIA PANEL - Refer to Figure 32.

The LED shows code '∃' in a lockout condition.

For fault finding refer to the diagnostic chart shown below.

8.3 FAULT FINDING CODES

In the event of the appliance failing to light, refer to the Diagnostics Chart.

32 FASCIA PANEL

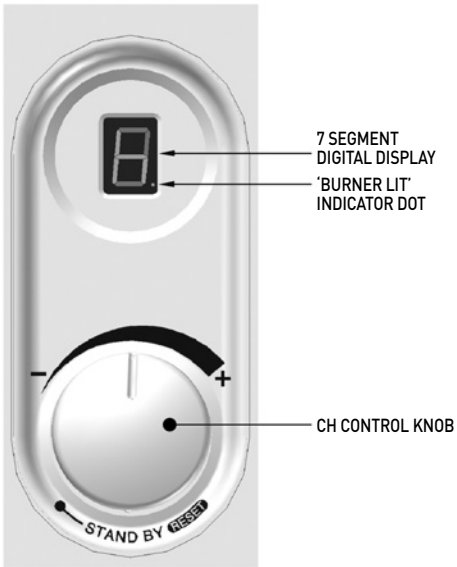

8.4 CENTRAL HEATING FAULT FINDING

Upon a demand for Central Heating, (closure of the time switch and room thermostat, where fitted), the controls should carry out a set of start up checks, followed by an ignition sequence. Refer to Section 5.2.

If the control has powered up correctly but does not respond to a CH demand. Remove plug cover and check voltage between L3 (orange) and N (blue). If 0 V ac, check external programmer / room thermostat. If 230 V ac, check control for lockout or blocking codes, (refer to section 8.3), check operation of the external pump.

Note: Whenever a CH demand is removed, an anti cycle mode is initiated which prevents the appliance from firing in CH mode for 5 minutes. Ensure that the control is not in this mode by removing power from the control and restoring it after a delay of 10 seconds.

If the Switch Live input is OK and no lockout or blocking code exists and the control is not in anti- cycle mode, then replace PCB.

RESET LOCK-OUT CODES

LED CODE	FAULT/EFFECT	REASON	ACTION
1	Overheated appliance	Water temperature greater than 105 °C	● Check no air is in heat exchanger/CH system ● Check external pump operation ● Check PCB/X1C connector ● Check flow thermistor
2	Water flow failure or Differential check faulty/ Flame for a short period only	Sensor temperature differential incorrect	● Check water pressure ● Check external pump/CH system blockage ● Check no air is in heat exchanger/CH system ● Check flow, and return sensors ● Check wires to sensors not crossed
3	No gas or Lockout flame signal/No flame, Lockout after 5 attempts	Low gas pressure. No flame signal on ignition, or loss of signal during ignition	● Check gas supply ● Check gas service cock ● Check gas valve and lead ● Check detection electrode lead ● Check PCB/X2A & X2B connectors ● Check spark generator/spark electrode ● Check mains earth lead continuity
4	Flue gas sensor/ No flame	Flue gas temperature greater than 95 °C	● Check flue sensor ● Check flue system ● Check no air is in heat exchanger/CH system ● Check pump ● Check PCB/PCB connectors

BLOCKING CODES

5	Defective sensor/No flame	Defective flow, return or flue sensor	● Check flow, return and flue sensors ● Check wiring to sensors ● Check PCB/X6 & X8 connectors
6	Defective gas valve/ Flame continues after demand ends	5 sec flame signal after burner is switched off	● Check gas valve and lead ● Check PCB
7	Defective fan/No flame	Missing or Erroneous RPM signal	● Check fan ● Check mains fan lead & connector ● Check low voltage fan lead & connector ● Check PCB/X3 connector
A	PCB error/No flame	Internal error	● Check PCB
b	Activate BCC/No flame	New BCC	● Turn CH control knob to reset twice to activate
C	Safety system failure/ No flame	Failure of internal self checking system	● Check PCB ● Check BCC is initialised
E	BCC error/No flame	Incorrect /missing BCC	● Reseat or replace BCC
h	No flame	No demand/Faulty connector	● Check PCB/X1A connector
0	Differential check faulty/ Flame for 15 seconds	Water flow rate too low	● Check water pressure ● Check external pump/CH system blockage ● Check no air is in heat exchanger/CH system ● Check flow, and return sensors ● Check wires to sensors not crossed
P	Error in power supply/ No flame	Low mains voltage	● Check mains voltage ● Check PCB connectors
	No light indication	Defective power supply	● Check power supply ● Check PCB/X1B connector ● Check PCB fuse

NOTE: RPM SIGNAL - FAN SPEED SIGNAL IN REVOLUTIONS PER MINUTE
BCC - BOILER CHIP CARD (A SMALL MICROCHIP THAT PUSH FITS ONTO THE CONTROL PCB AND ALTERS OPERATING PARAMETERS) (ONLY FITTED TO CERTAIN MODELS)

FAULT CODES 1-4 CAN BE RESET BY FOLLOWING THE PROCEDURE IN SECTION 5.4. HOWEVER, IF ANY OTHER FAULT CODE IS SHOWING PLEASE CONTACT YOUR INSTALLER OR THE HALSTEAD GLEN DIMPLEX SERVICE HELPLINE: 0844 371 1111.

9 REPLACEMENT OF PARTS

Before commencing any service operation, ISOLATE the mains electrical supply and TURN OFF the gas supply at the main service cock.

Replacement of most parts first requires the removal of the sealed chamber front panels; refer to section 6.2.

There may be some slight water spillage; so electrical components should be protected.

It is the law that any service work must be carried out by a registered person.

9.1 IGNITION & DETECTION ELECTRODES

Refer to Figure 33

a) Ensure supply voltage is isolated, and that the gas supply is isolated.

b) Remove the gas control valve, fan & burner assembly; refer to section 6.2.

c) Unscrew the two screws holding the electrode, remove electrode, and used gasket.

d) Fit the new electrode, and new gasket.

e) Check that electrode is aligned as detailed in Figures 29(a) or 29(b).

f) Re-assemble in reverse order. Ensure that all joints and seals are correctly re-fitted.

9.2 IGNITOR UNIT & IGNITION LEADS

Refer to Figure 34

a) Ensure supply voltage is isolated.

b) Remove the plug and earth lead from the ignition electrode.

c) Remove the electrical supply leads.

d) Unscrew the two screws holding the ignitor unit, remove ignitor unit.

e) Fit the new ignitor unit.

g) Re-assemble in reverse order; ensure that the ignitor unit is orientated as shown in Figure 34, and that the brown electric supply lead is fitted to position 1 on the igniter unit.

h) Ensure that all joints and seals are correctly re-fitted.

33 IGNITION & DETECTION ELECTRODES

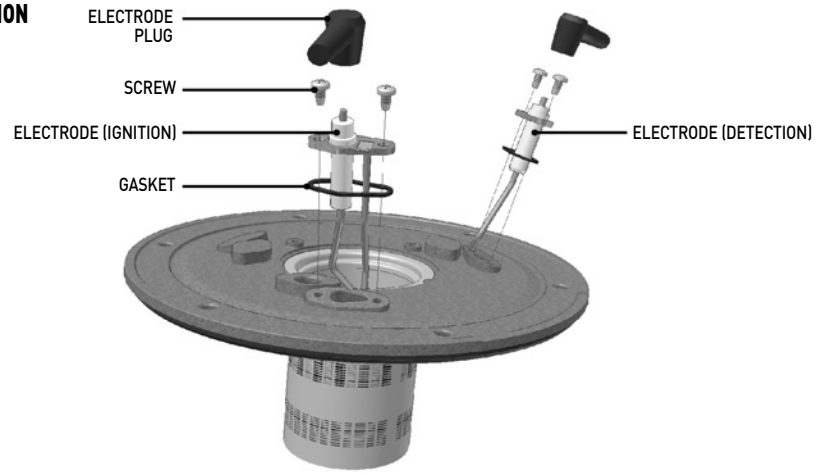

34 IGNITOR UNIT AND IGNITION LEADS

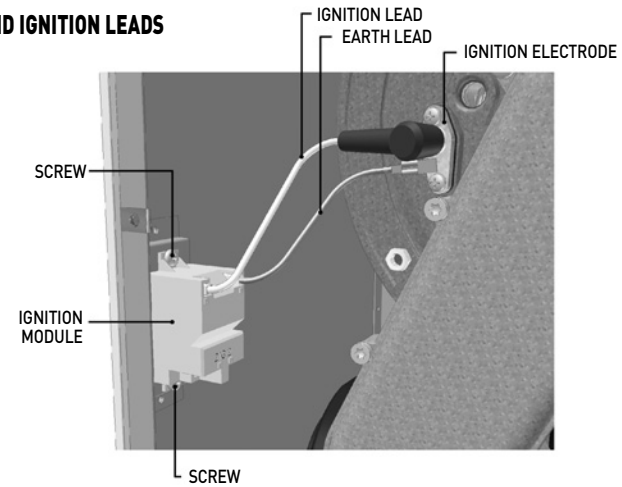

9.3 GAS CONTROL VALVE INCLUDING AIR INLET COWL

Refer to Figures 35, 36 & 37

a) Ensure supply voltage is isolated, and that the gas supply is isolated.

b) Remove the gas control valve, fan & burner assembly; refer to section 6.2.

c) Unscrew four screws holding the gas feed pipe, and remove gas feed pipe, refer to Figure 35.

d) Unscrew three torx screws (T-20), and remove gas control valve, refer to Figure 36.

e) Unclip the top section of the black plastic air inlet cowl from the fan assembly, and remove white plastic insert, clean or replace as necessary, refer to Figure 37.

f) Refit or replace the top section of the black plastic air inlet cowl, ensuring that it is clipped into place and that the holes in the white plastic insert are aligned with the fixing holes.

g) Attach and secure the gas feed pipe to the replacement gas valve, using a new gasket.

h) Attach and secure the replacement gas control valve to the fan assembly.

i) Re-assemble in reverse order; ensure that all joints and seals are correctly re-fitted.

Note: The gas control valve is factory set and sealed and is not adjustable. If the gas control valve is changed, then when the appliance is running, the flue gas CO_2 should be measured, refer to section 6.1, and compared to the values stated in Performance Data, section 2.2. If the measured value does not correspond to the Performance Data, then follow section 9.3.1 below or contact: Halstead Glen Dimplex service helpline Tel: 0844 371 1111.

9.3.1 COMBUSTION CHECK SET-UP

If a new gas valve is fitted or the existing gas valve is not within the quoted CO_2 values it must be adjusted to operate within the quoted CO_2 values (see Combustion set-up table on the following page).

GAS VALVE REPLACEMENT INSTRUCTIONS

The Eden VBX 18 and 30 are category II_{2H3P} appliances.

The appliances are supplied for use on Natural Gas (G20) at a supply pressure of 20 mbar or Propane (G31) at a supply pressure of 37 mbar but can be converted from NG to Propane or vice versa, using specific conversion kits. They are certified to comply with the requirements of EN 483 for use in GB and IE only.

It is the law that all gas appliances are installed and maintained by a competent person such as a Corgi registered installer, in accordance with the rules in force. It is in your own interest, and that of safety, to ensure that the law is complied with. Failure to do so could lead to prosecution.

The following instructions are intended for guidance and in no way override any Statutory Requirements.

a) The combustion values at minimum gas rate and maximum gas rate must be checked using a suitably calibrated Flue Gas analyser. Compliance with BS7967-2, BS7967-3 and BS7967-4 is required.

b) Do not attempt to adjust the gas valve unless you have a suitable Flue Gas analyser that is checked and within calibration. Compliance with BS7967-2, BS7967-3 and BS7967-4 is required.

35 GAS FEED PIPE

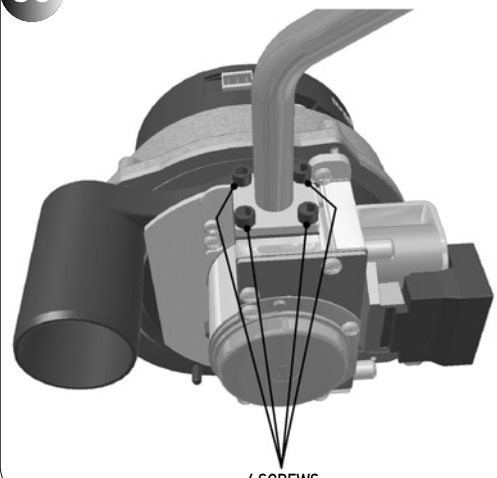

36 GAS CONTROL VALVE

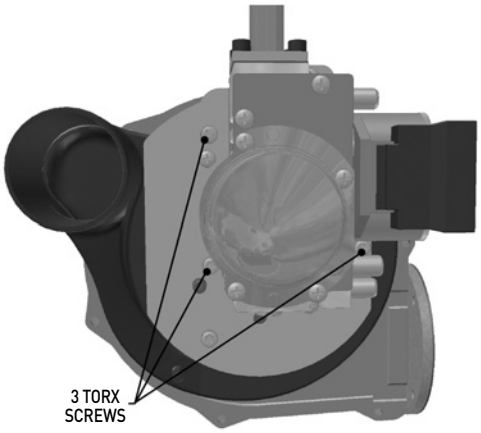

37 AIR INLET COWL

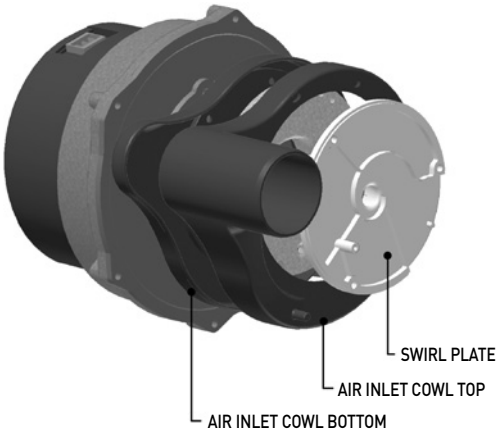

RE-COMMISSIONING

Before commissioning the appliance, the whole gas installation including the meter must be purged and tested for gas tightness.

IMPORTANT: Open all doors and windows; extinguish naked flames and do not smoke whilst purging the gas installation pipe work.

a) Before switching the appliance ON ensure that the Throttle Adjuster screw (Fig. 39) is adjusted to the correct dimension as follows:-

- FULLY wind out the throttle adjuster screw by rotating it counter clockwise using a conventional flat bladed screw driver.
- Using the relevant end (Nat Gas or LPG as shown in fig.38) of the tool provided, rotate the throttle adjuster screw clockwise until the tool bottoms out on the body of the gas valve. The dimension from the valve body to the top of the throttle adjuster screw head should then correspond with 'Dimension X' shown in the Combustion set-up table below.

38 THROTTLE ADJUSTMENT TOOL

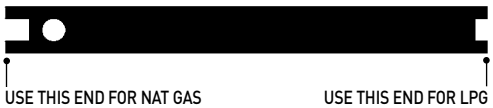

39

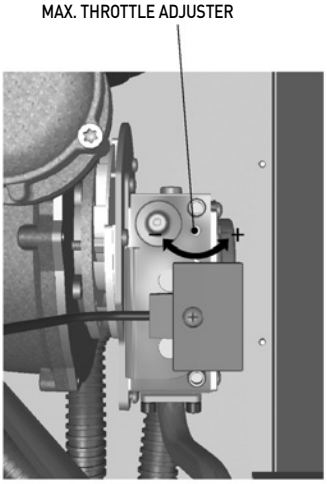

Combustion Set up table		
	Nat Gas	**Propane**
Dimension 'X' (measured from valve body to top of screw) (nominal)	4.5mm	3.0mm
Applies to all models		

b) Combustion checks

The CO (Carbon Monoxide) & CO_2 (Carbon Dioxide) must be within the values quoted in Section 2.3. Combustion checks must be carried out at Minimum and Maximum Gas rate.

- A suitable, calibrated flue gas analyser is required. The appliance incorporates a flue sampling point on the flue socket. The cap of the sampling point should be removed and the sample tube inserted into the middle of the inner flue pipe.
- Switch the appliance on and ensure that the clock and room thermostat (if fitted) are calling for heat and that all radiators are open.

c) To set the boiler into Service Mode at Minimum rate:-

- Set the control knob clockwise until it stops in approximately the 5 o'clock position. **Note:-** the knob will turn past the horizontal maximum temperature mark. The boiler is now in '***Service mode***' with the fan speed at **Minimum** rate and the digital display will show a flashing 'H'
- Check the **Minimum** rate combustion readings are within the required values shown in section 2.3.

d) For service mode at Maximum rate first set the boiler to minimum rate (see 'c' above) :-

- Turn the CH control knob back to normal operation mode and within 3 seconds back to '***Service mode***'. The fan speed will now increase to **Maximum** rate.

e. Check the Maximum rate combustion readings are within the required values shown in section 2.3.

- If the combustion readings are outside the values shown in section 2.3 then adjustment of the gas valve is required **(See Section 6).**

ADJUSTMENT OF GAS VALVE

Refer to section 2.3 for the Carbon Dioxide (CO_2) set points at Maximum Gas Rate.

- Set the boiler into Service mode at Maximum rate (see sections 'c' & 'd' above).

  Adjust the CO_2 by turning the Max Throttle Adjuster as shown in fig. 39.

  NOTE: Only turn the throttle in small steps of no more than 1/8th of a turn and wait for 1 minute after each adjustment for the combustion reading to stabilise.

  Anti-clockwise to increase CO_2

  Clockwise to decrease CO_2

- After setting the Carbon Dioxide (CO_2) in accordance with section 2.3 put the boiler into Service mode at Minimum rate (See sections 'c' above)
- Check the **Minimum** rate combustion readings are within the required values shown in section 2.3.
- Once all adjustments are complete seal the throttle adjustment screw and ensure the sampling cap is replaced on the flue sample point.

COMPLETION

If CO_2 (Carbon Dioxide) and CO (Carbon Monoxide) are not within the range stated in Section 2.3 please call Halstead Glen Dimplex service helpline for additional information about adjustment of the gas valve. Tel: 0844 371 1111.

Finally, set the heating and hot water controls to the user's requirements. Where fitted ensure that the clock override switch is in the timed position and check that the time clock is set at the desired time periods. Set the room thermostat and tank/cylinder thermostat, (if fitted) to the required setting(s)

If the gas control valve is changed, then it is imperative that it is commisioned as per the instructions provided with the new gas valve. The flue gas CO_2 must be within the values quoted in section 2.3 of this manual. If this is not the case then contact: Halstead Glen Dimplex service helpline Tel: 0844 371 1111.
Always seal the gas valve adjustment screw withpaint after adjustment.

9.4 FAN

Refer to Figures 37, 40 and 41.

a) Ensure supply voltage is isolated, and that the gas supply is isolated.

b) Remove the gas control valve, fan & burner assembly; refer to section 6.2.

c) Remove the gas control valve; refer to section 9.3.

d) Unscrew the three screws holding the gas valve mounting plate, remove plate; refer to Figures 36 and 40.

e) Unscrew the four screws holding the fan to the burner manifold, and remove fan; refer to Figure 41.

f) Attach and secure the replacement fan, replace the gasket.

g) Re-assemble in reverse order; ensure that all joints and seals are correctly re-fitted.

40 GAS VALVE MOUNTING PLATE

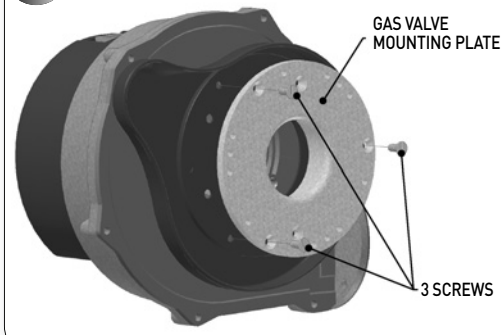

41 FAN MOUNTING SCREWS

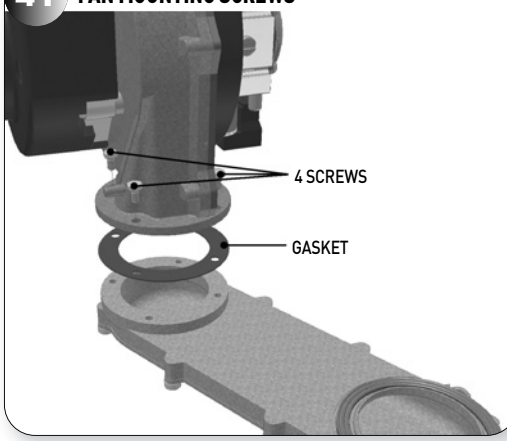

9.5 BURNER

Refer to Figures 42, 43 & 44

a) Ensure supply voltage is isolated, and that the gas supply is isolated.

b) Remove the gas control valve, fan & burner assembly; refer to section 6.2.

c) Unscrew the three torx screws, (T-25), holding the manifold to the combustion chamber front cover, and remove the manifold; refer to Figure 42.

42 MANIFOLD MOUNTING SCREWS

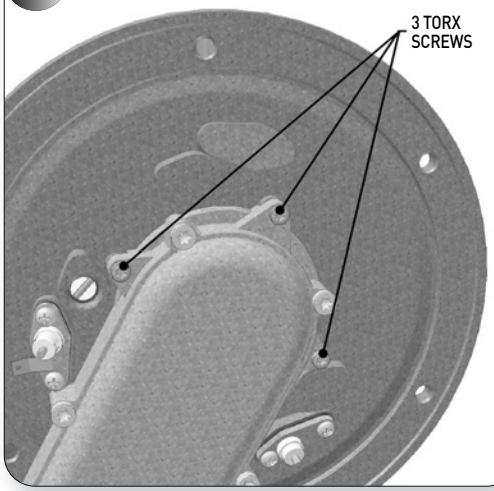

43 WITHDRAWING BURNER

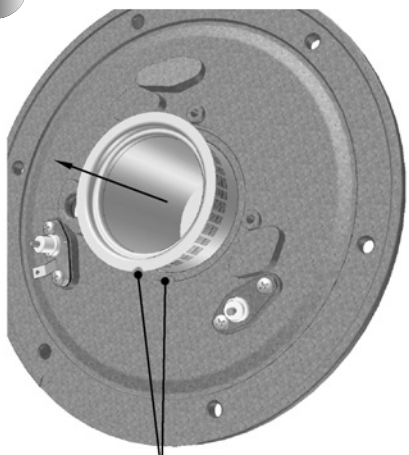

44 BURNER GASKET

d) Remove the gasket, and withdraw the burner; refer to Figure 43.

e) Fit replacement burner, taking care not to damage the insulation, and ensure burner is correctly located by lining up the locating tab.

f) Fit new gasket; refer to Figure 44.

g) Re-assemble in reverse order; ensure that all joints and seals are correctly re-fitted.

9.6 COMBUSTION CHAMBER FRONT INSULATION

The design of the appliance is such that the combustion chamber insulation should not require replacement unless mechanically damaged. It is recommended that to prevent dust, the insulation be dampened prior to removal, and that a protective mask is worn when changing or handling the insulation material.

Refer to Figure 45

a) Ensure supply voltage is isolated, and that the gas supply is isolated.

b) Remove the gas control valve, fan & burner assembly; refer to section 6.2.

c) Remove the electrodes; refer to section 9.1.

d) Remove the burner: refer to section 9.5.

e) Replace the combustion chamber front insulation.

f) Re-assemble the burner and electrodes, using new gaskets.

g) Check the position of the electrodes: refer to section 6.4.

h) Re-assemble in reverse order; ensure that all joints and seals are correctly re-fitted.

45 COMBUSTION CHAMBER FRONT INSULATION

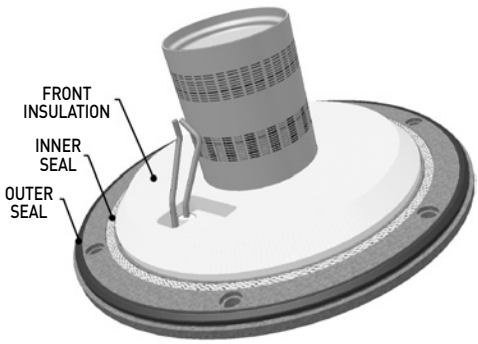

9.7 COMBUSTION CHAMBER REAR INSULATION

Refer to Figure 46

a) Ensure supply voltage is isolated, and that the gas supply is isolated.

b) Remove the gas control valve, fan & burner assembly; refer to section 6.2.

c) Use an Allen key to undo the central screw holding the rear insulation in place.

d) Remove old insulation and fit replacement, ensuring locating washer is in front.

e) Re-assemble in reverse order; ensure that all joints and seals are correctly re-fitted.

46 COMBUSTION CHAMBER REAR INSULATION

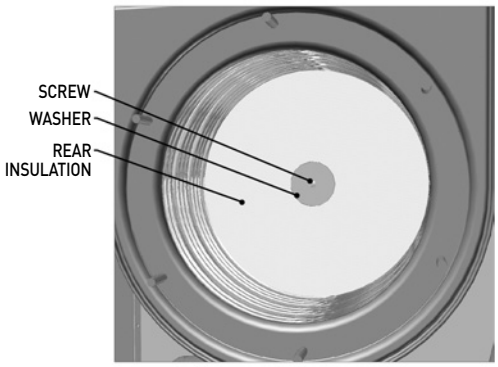

9.8 HEAT EXCHANGER

Refer to Figures 14 & 47

a) Ensure supply voltage is isolated, and that the gas supply is isolated.

b) Remove the gas control valve, fan & burner assembly; refer to section 6.2.

c) Disconnect the electrical leads to the flue sensor, flow sensor and return sensor.

d) Drain down the appliance.

e) Disconnect the flue system from the appliance, 4 screws, and lift up to disengage the flue from the flue hood; refer to Figure 14.

f) Remove the retaining clip from the heat exchanger flow outlet; refer to Figure 47.

g) Gently pull up (or down, depending on installation) to disengage the flow pipe from the heat exchanger.

h) Remove the retaining clip from the heat exchanger return inlet.

i) Rotate the return pipe clockwise and gently pull down to disengage the return pipe from the heat exchanger.

It may be necessary to cut both flow and return pipes to disengage them from the heat exchanger.

j) Disconnect the condensate drainpipe from the condensate drainpipe sump adaptor; refer to section 9.12.

k) Unscrew the three nuts holding the heat exchanger to the back panel; refer to Figure 47.

l) Remove the heat exchanger.

m) Disconnect the condensate drainpipe sump adaptor from the heat exchanger.

n) Remove the flue hood from the heat exchanger, two screws, and fit the flue hood onto the new heat exchanger, Check integrity of the flue hood seals and replace as necessary. Remove the manual air vent and vent tube from the heat exchanger and fit onto to new heat exchanger; refer to Figure 47.

o) Fit the condensate drainpipe sump adaptor to the heat exchanger and flue hood.

p) Re-assemble in reverse order; check integrity of the flow and return pipe 'O' rings and fibre washers and replace as necessary. Ensure that all joints and seals are correctly re-fitted.

q) Open the isolating cocks and vent air from the system using the manual air vent. Re-pressurise the system as necessary and check for water leaks.

Note: It is likely that the heat exchanger will still contain water.

47 HEAT EXCHANGER

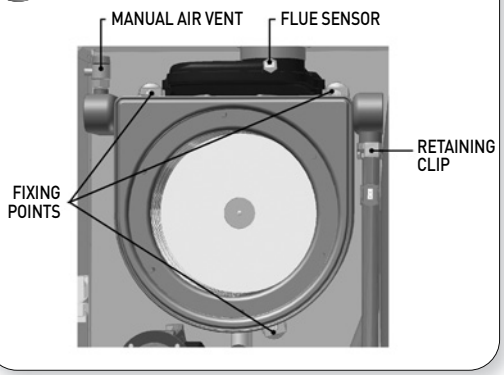

9.9 FLUE HOOD

Refer to Figures 48

a) Ensure supply voltage is isolated, and that the gas supply is isolated.

b) Remove the gas control valve, fan & burner assembly; refer to section 6.2.

c) Remove the heat exchanger: refer to section 9.8.

d) Disconnect the condensate drainpipe sump adaptor from the heat exchanger; refer to section 9.12.

e) Remove the existing flue hood from the heat exchanger, two screws, and fit the replacement flue hood onto the heat exchanger; use new flue hood seals; refer to Figure 48.

f) Fit the condensate drainpipe sump adaptor to the heat exchanger and flue hood.

g) Unscrew the flue sensor from the existing flue hood and fit onto the new flue hood; refer to section 9.16.

h) Re-assemble in reverse order; check integrity of the flow and return pipe 'O' rings and fibre washers and replace as necessary. Ensure that all joints and seals are correctly re-fitted.

i) Open the isolating cocks and vent air from the system using the manual air vent. Re-pressurise the system as necessary and check for water leaks.

48 FLUE HOOD

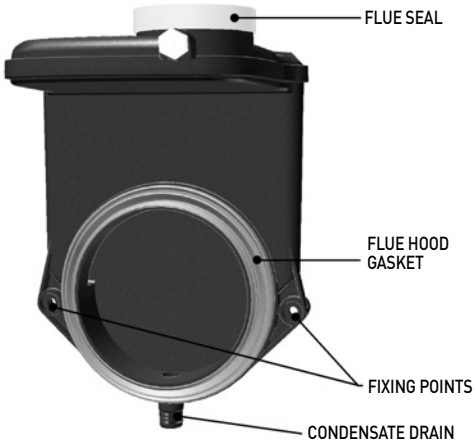

9.10 WATER TEMPERATURE SENSORS

Refer to Figure 49

a) Ensure supply voltage is isolated.

b) Disconnect the electrical lead from the sensor to be changed.

c) Unclip the sensor from the pipe and remove.

d) Clip the replacement sensor onto the pipe and position as shown in Figure 49.

e) Reconnect the electrical lead.

49 FLOW SENSOR

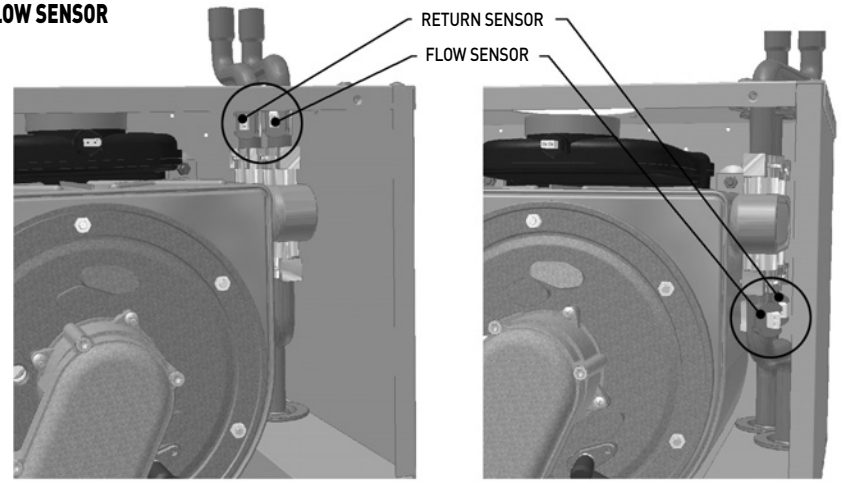

TEMPERATURE SENSOR POSITION WHEN USING STANDARD TOP OUTLET PIPEWORK

TEMPERATURE SENSOR POSITION WHEN USING OPTIONAL BOTTOM OUTLET PIPEWORK

9.11 FLUE SENSOR

Refer to Figure 50

a) Ensure supply voltage is isolated.

b) Disconnect the electrical lead from the flue sensor.

c) Unscrew the flue sensor and remove from the flue hood.

d) Fit the replacement flue sensor and reconnect the electrical lead (blue plug).

50 FLUE SENSOR

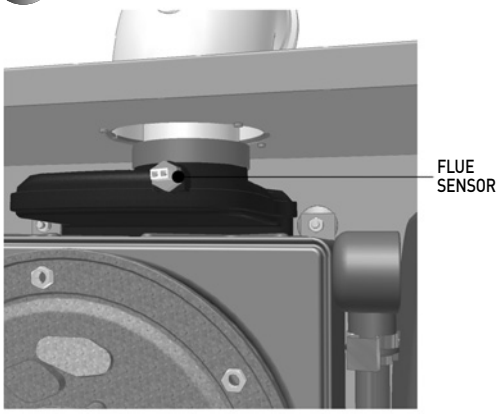

9.12 CONDENSATE DRAIN SYSTEM

Refer to Figure 30

a) Ensure supply voltage is isolated.

b) Open the drain sump cap, while holding a receptacle beneath to capture any condensate.

c) Disconnect the condensate drainpipe from the appliance.

d) Undo the two locknuts holding the system in place.

e) Detach the condensate drainpipe sump adaptor, by gently pulling down.

f) Remove the condensate drain system, clean or replace as necessary.

g) Re-assemble in reverse order; ensure that all joints and seals are correctly re-fitted.

9.13 CONTROL PCB

Note:- When replacing the control PCB it is important that the instructions supplied with the new PCB are followed. Do not use any old BCC cards.

The following is only a guide. Refer to Figures 22, 27 & 30

a) Ensure supply voltage is isolated.

b) Unclip the user interface from its housing (see figure 22).

c) Lower the controls front.

d) Unplug the electrical leads from the PCB. Refer to section 7.

e) Remove the PCB plastic cover.

f) Unclip the PCB and withdraw.

g) Fit the new PCB and BCC if required.

h) Re-assemble in reverse order.

i) If the boiler requires resetting turn the CH Temperature Control knob anti-clockwise to 'STANDBY' position and then back to 'ON' within two seconds. Refer to section 5.4.

After fitting a new PCB always re-check the combustion of the boiler to ensure it is within the values quoted in section 2.3.

If the combustion figures are not within the values quoted then contact Halstead Glen Dimplex service helpline Tel: 0844 371 1111.

10 SHORT PARTS LIST

Refer to Figure 51

Key	G C Part No.	Description	No off	Makers Pt No.
1		Ignition Electrode		988526
2		Detection Electrode		988527
3		Spark Generator Unit		500665
4		Gas Control Valve		988315
5		Fan Assembly		601016
6a		Burner VBX 30		700602
6b		Burner VBX 18		700600
7a		Heat Exchanger (VBX 30)		451033
7b		Heat Exchanger (VBX 18)		451034
8		Water Temperature Sensor		500661
9		Flue Sensor		500660
10		Manual Bleed Valve		300730
11		Control PCB		988491
12		User Interface		988492
		Heat Exchanger Seal Kit		988489

spares & parts online IBASIS.CO.UK

spares & parts online IBASIS.CO.UK

BENCHMARK No. | | | | | | |

GAS BOILER COMMISSIONING CHECKLIST

BOILER SERIAL No. _____ **NOTIFICATION No.** _____

CONTROLS *To comply with the Building Regulations, each section must have a tick in one or other of the boxes*

TIME & TEMPERATURE CONTROL TO HEATING	ROOM T/STAT & PROGRAMMER/TIMER ☐	PROGRAMMABLE ROOMSTAT ☐
TIME & TEMPERATURE CONTROL TO HOT WATER	CYLINDER T/STAT & PROGRAMMER/TIMER ☐	COMBI BOILER ☐
HEATING ZONE VALVES	FITTED ☐	NOT REQUIRED ☐
HOT WATER ZONE VALVES	FITTED ☐	NOT REQUIRED ☐
THERMOSTATIC RADIATOR VALVES	FITTED ☐	
AUTOMATIC BYPASS TO SYSTEM	FITTED ☐	NOT REQUIRED ☐

FOR ALL BOILERS CONFIRM THE FOLLOWING

THE SYSTEM HAS BEEN FLUSHED IN ACCORDANCE WITH THE BOILER MANUFACTURER'S INSTRUCTIONS ☐

THE SYSTEM CLEANER USED

THE INHIBITOR USED

FOR THE CENTRAL HEATING MODE, MEASURE & RECORD

GAS RATE	☐ m3/hr	☐ ft3/hr
BURNER OPERATING PRESSURE (IF APPLICABLE)	☐ N/A	☐ mBar
CENTRAL HEATING FLOW TEMPERATURE		☐ °C
CENTRAL HEATING RETURN TEMPERATURE		☐ °C

FOR COMBINATION BOILERS ONLY

HAS A WATER SCALE REDUCER BEEN FITTED? YES ☐ NO ☐

WHAT TYPE OF SCALE REDUCER HAS BEEN FITTED?

FOR THE DOMESTIC HOT WATER MODE, MEASURE & RECORD

GAS RATE	☐ m3/hr	☐ ft3/hr
MAXIMUM BURNER OPERATING PRESSURE (IF APPLICABLE)	☐ N/A	☐ mBar
COLD WATER INLET TEMPERATURE		☐ °C
HOT WATER OUTLET TEMPERATURE		☐ °C
WATER FLOW RATE		☐ lts/min

FOR CONDENSING BOILERS ONLY CONFIRM THE FOLLOWING

THE CONDENSATE DRAIN HAS BEEN INSTALLED IN ACCORDANCE WITH THE MANUFACTURERS INSTRUCTIONS YES ☐

FOR ALL INSTALLATIONS CONFIRM THE FOLLOWING

THE HEATING AND HOT WATER SYSTEM COMPLIES WITH CURRENT BUILDING REGULATIONS ☐

THE APPLIANCE AND ASSOCIATED EQUIPMENT HAS BEEN INSTALLED AND COMMISSIONED IN ACCORDANCE WITH THE MANUFACTURER'S INSTRUCTIONS ☐

IF REQUIRED BY THE MANUFACTURER, HAVE YOU RECORDED A CO/CO_2 RATIO READING N/A ☐ YES ☐ CO/CO_2 RATIO

THE OPERATION OF THE APPLIANCE AND SYSTEM CONTROLS HAVE BEEN DEMONSTRATED TO THE CUSTOMER ☐

THE MANUFACTURER'S LITERATURE HAS BEEN LEFT WITH THE CUSTOMER ☐

COMMISSIONING ENG'S NAME

PRINT _____ CORGI ID No. _____

SIGN _____ DATE _____

SERVICE INTERVAL RECORD

It is recommended that your heating system is serviced regularly and that you complete the appropriate Service Interval Record below.

SERVICE PROVIDER Before completing the appropriate Service Interval Record below, please ensure you have carried out the service as described in the boiler manufacturer's instructions.

Always use the appliance manufacturer's specified spare part when replacing gas controls.

SERVICE 1 DATE:
ENGINEER NAME
COMPANY NAME
TEL No.
CORGI ID SERIAL No.
COMMENTS
SIGNATURE

SERVICE 2 DATE:
ENGINEER NAME
COMPANY NAME
TEL No.
CORGI ID SERIAL No.
COMMENTS
SIGNATURE

SERVICE 3 DATE:
ENGINEER NAME
COMPANY NAME
TEL No.
CORGI ID SERIAL No.
COMMENTS
SIGNATURE

SERVICE 4 DATE:
ENGINEER NAME
COMPANY NAME
TEL No.
CORGI ID SERIAL No.
COMMENTS
SIGNATURE

SERVICE 5 DATE:
ENGINEER NAME
COMPANY NAME
TEL No.
CORGI ID SERIAL No.
COMMENTS
SIGNATURE

SERVICE 6 DATE:
ENGINEER NAME
COMPANY NAME
TEL No.
CORGI ID SERIAL No.
COMMENTS
SIGNATURE

SERVICE 7 DATE:
ENGINEER NAME
COMPANY NAME
TEL No.
CORGI ID SERIAL No.
COMMENTS
SIGNATURE

SERVICE 8 DATE:
ENGINEER NAME
COMPANY NAME
TEL No.
CORGI ID SERIAL No.
COMMENTS
SIGNATURE

SERVICE 9 DATE:
ENGINEER NAME
COMPANY NAME
TEL No.
CORGI ID SERIAL No.
COMMENTS
SIGNATURE

SERVICE 10 DATE:
ENGINEER NAME
COMPANY NAME
TEL No.
CORGI ID SERIAL No.
COMMENTS
SIGNATURE

Glen Dimplex Boilers, Stoney Lane, Prescot Merseyside L35 2XW.

For telephone enquiries call: 0844 371 1111.

Website: www.glendimplexboilers.com

Part of the Glen Dimplex Group

The code of practice for the installation, commissioning & servicing of central heating systems

Glen Dimplex Boilers is continuously improving its products and may therefore change specifications without prior notice. The statutory rights of the consumer are not affected.

07/10 751053 Issue 4

SALES AND SERVICE HELPLINE: 0844 371 1111