HALSTEAD

British Made Boilers

Hero

Lightweight Cast Iron boiler

30, 40, 50, 60, 75, 90

Installation and Service Instruction

To be left with user adjacent to gas meter

G. C. APPLIANCE No:

CE 0086 EC 0087/BN/41

Hero 30: 41-260-01
Hero 40: 41-260-02
Hero 50: 41-260-03
Hero 60: 41-260-04
Hero 75: 41-260-05
Hero 90: 41-260-06
Hero 40 PROPANE: 41-260-07
Hero 60 PROPANE: 41-260-08

CONTENTS

1	**GENERAL DESCRIPTION**	
2	**TECHNICAL SPECIFICATIONS**	1
2.1	Gas Categories	1
2.2	Performance data	1
2.3	Connection Sizes	1
2.4	General specifications	1
2.5	Overall dimensions and minimum clearances	2
2.6	Air/flue duct specification	2
2.7	Se-duct applications	4
2.8	Exploded diagram	4
3	**INSTALLATION REQUIREMENTS**	5
3.1	Statutory requirements	5
3.2	Boiler location	5
3.3	Flue terminal position	6
3.4	Ventilation requirements	6
3.5	Gas supply	6
3.6	Data supply	6
3.7	Electricity supply	6
3.8	Central heating water systems	7
3.8.1	Open vented systems	7
3.8.2	Sealed systems	7
4.0	**INSTALLING THE APPLIANCE**	9
4.1	Unpacking the appliance	9
4.2	Preparing the wall	9
4.2.1	Rear outlet flue	9
4.2.2	Top outlet flue	11
4.3	Air/flue duct installation	11
4.3.1	Preparing the horizontal duct	12
4.3.2	Installing the horizontal duct from inside the building	13
4.3.3	Installing the horizontal duct from outside the building	13
4.3.4	Preparing and installing the vertical duct	14
4.4	Gas connection	14
4.5	Water connections	14
4.6	Wiring instructions	15
5	**COMMISSIONING AND TESTING**	17
5.1	Open vented water systems	17
5.2	Sealed water systems	18
5.3	Users instructions	18
5.4	Boiler logbook	18
6	**ROUTINE SERVICING INSTRUCTIONS**	19
6.1	Checking the operation of the appliance	19
6.2	Commencing with servicing	19
6.3	Fan assembly	19
6.4	Main burner assembly & combustion chamber insulation	20
6.5	Ignition and detection electrode insulation	20
6.6	Injector	20
6.7	Air pressure switch tubes	20
6.8	Heat exchanger	20
6.9	Re-assembly	20
6.10	Re-commisioning	20
7	**REPLACEMENT OF PARTS**	21
7.1	Overheat cut off device	21
7.2	Flow temperature sensing device	21
7.3	Air pressure switch	21
7.4	Electronic diagnostic and ignition sequence control board	21
7.5	Fan assembly	22
7.6	Main burner	22
7.7	Injector	22
7.8	Gas valve	22
7.9	Igniton / Flame sensing electrode	22
7.10	Combustion chamber insulation	23
7.10.1	Front panel insulation	23
7.10.2	Side panel insulation	23
8	**INTERNAL WIRING DIAGRAMS**	23
9	**FAULT FINDING**	24
10	**SHORT PARTS LIST**	25

1 INTRODUCTION

The **Halstead Hero** range consists of six different outputs. The outputs are available from 30,000 to 90,000 BTU/h and spot rated (non modulating). All versions are wall mounted, fan assisted balanced flue natural gas boilers incorporating a cast iron heat exchanger.

The HERO range is for use in fully pumped open-vented or sealed water central heating systems. The appliances are NOT suitable for semi gravity systems.

The appliance is fitted with an electronic control device to combine and provide functions for ignition, manually adjustable central heating temperature control, pump over-run, frost protection and basic diagnostic information.

It features an attractive white casing hinged with front door panel. The hinged front door panel has to be removed if the appliance is to be fitted within a standard kitchen wall unit.

The appliances are supplied with a standard concentric flue terminal which is suitable for rear wall thicknesses up to 340mm. For side horizontal or vertical flueing application the flue kit, part number 955080, is required.

Additional flue kits are available to extend the flue length to any length as specified in clause 2.

For further information regarding vertical flue terminal installation please refer to Halstead's Flue Guide.

Control of substances Hazardous to Health

Under Section 6 of The Health and Safety at Work Act 1974, it is required to provide information on substances hazardous to health.

Manual Handling Guidance

During the appliance installation it will be necessary to employ caution and assistance whilst lifting as the appliance exceeds the recommended weight for a one man lift.

Take care to avoid trip hazards, slippery or wet surfaces.

Insulation material

The insulation material is made of Superwool 612 BB and can cause irritation to skin, eyes and the respiratory tract.

High dust levels are usually only if the material is broken. Normal handling shouldn't cause any discomfort, but it is advised to follow normal hygiene and wash your hands immediately after working with the material.

If you do suffer irritations to the eyes or to the skin seek medical attention.

The adhesives and sealants used in this appliance are cured and give no hazard in this state.

Note: British standard BS7593: 1992 stresses the importance of cleansing and flushing of the system to ensure it continues to run efficiently with the minimum of maintenance necessary. Halstead Boilers fully support this professional approach and recommend that the system is cleansed with an effective chemical cleanser and protected long term with a suitable inhibitor. Such products are available from Fernox and Sentinel.

2 TECHNICAL SPECIFICATIONS

2.1 GAS CATEGORIES AND APPLIANCE CLASSIFICATION

The appliance meets the essential requirements for Gas Appliance (90/396/EEC) and the Efficiency directive (92/42/EEC). It also meets the directive 73/23/EEC relating to electrical equipment designed for use within certain voltage limits and directive 89/336/EEC relating to electromagnetic compatibility.

The appliances were certified by the Notified Body 0087.

Any alterations to the appliance not approved by Halstead Boilers Ltd could invalidate the certification, boiler warranty and may infringe the current issue of statutory requirements.

The appliances are marked as category I2H for use on Natural Gas (G20) only. The HERO 40 and 60 are also approved to I3P and available as separate boilers.

As defined in EN 483 the appliance classification may be any of the following depending on the chosen flue option:

C12: concentric horizontal or

C22: SE-duct

C32: concentric vertical

2.2 PERFORMANCE DATA

The Seasonal Efficiency (SEDBUK) conforms to Band D. The efficiency value is used in the UK Government Standard Assessment (SAP) for energy rating of dwellings.

HERO		30	40	40 P	50	60	60 P	75	90
Heat output	kW	8.79	11.72	11.72	14.65	17.58	17.58	21.97	26.37
	BTU/h	30000	40000	40000	50000	60000	60000	75000	90000
Heat input (gross)	kW	10.85	14.47	14.47	18.1	21.7	21.7	27.2	32.6
	BTU/h	37020	49372	49372	61757	74040	74040	92806	111231
Heat input (nett)	kW	9.78	13.03	13.33	16.3	19.6	19.99	24.51	29.37
	BTU/h	33369	44458	45495	55616	66875	68226	83628	100210
Burner pressure	mbar	6.9	12.2	21.5	10.0	12.5	23	9.8	14.2
	In.wg	2.8	4.9	8.6	4.0	5.0	9.2	3.9	5.7
SEDBUK	%	79.36	79.08	80.89	78.54	79.29	80.87	78.4	78.6

2.3 CONNECTION SIZES

Gas connection	Rc 1/2 " BSP
CH connections	22 mm tail end

2.4 GENERAL SPECIFICATIONS

HERO	30	40	40 P	50	60	60 P	75	90
Main burner								
Injector mm ø	3.0	3.0	2.1	3.5	3.7	2.5	4.4	4.4
Minimum Water Flow Rate								
l/min	11.45	15.27	15.27	19.09	22.90	22.90	28.66	34.37
(galls/min)	(2.51)	(3.36)	(3.36	(4.20)	(5.04)	(5.04)	(6.30)	(7.56)
Total Water Capacity								
Litres	1.75	1.75	1.75	1.75	1.75	1.75	2.6	2.6
galls	0.385	0.385	0.385	0.385	0.385	0.385	0.572	0.572
Pressure loss								
(mH_2O) @ 11°C _T	0.18	0.32	0.32	0.48	0.7	0.7	0.8	1.1
Static Head								
Max metres	30	30	30	30	30	30	30	30
ft	100	100	100	100	100	100	100	100
Total weight								
kg	44.2	44.2	44.2	44.2	44.2	44.2	57.35	57.35
lb	97.44	97.44	97.44	97.44	97.44	97.44	126.4	(126.4
Lift Weight								
kg	36	36	36	36	36	36	48.3	48.3
lb	79.37	79.37	79.37	79.37	79.37	79.37	106.5	106.5
Electricity supply	230V 50Hz	230V 50Hz	230V 0Hz	230V 50Hz	230V 50Hz	230V 50Hz	230V 50Hz	230V 50Hz
Power consumption								
watts	70	70	70	70	70	70	85	85
Internal Fuse								
Amps	4	4	4	4	4	4	4	4
External Fuse								
Amps	3	3	3	3	3	3	3	3
Water protection rating	2	2	2	2	2	2	2	2
*** Gas consumption**								
l/min	17.23	22.98	13.5	28.75	34.46	9.0	43.2	51.77
ft^3/hr	(36.49)	(48.69)	(28.59)	(60.91)	(73.02)	(19.1)	(91.02)	(109.7)
Rear Horizontal Flue System								
Restrictor Diameter [RF] mm (Rear Exit)	27	30	30	35	37	37	38	40
Vertical Flue System								
Restrictor Diameter [UF] mm	28	34	34	38	42	42	43	45
CO_2 Value %	6.0	6.0	7.0	6.5	7.0	7.7	7.0	7.0

* Gas consumption based on using Natural Gas with a C.V of 37.78 MJ/m3. **Using Propane with a CV of 95.65 MJ/m3

2.5 OVERALL DIMENSIONS AND MINIMUM CLEARANCES

1

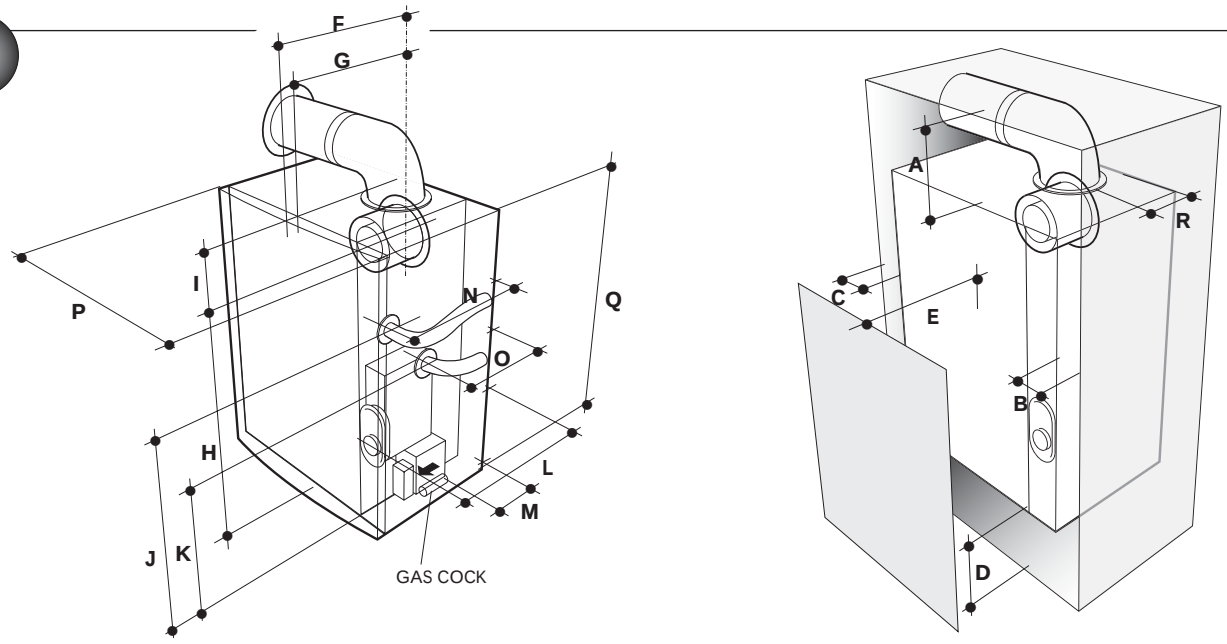

HERO	A	B	C	D	E	F	G	H	I	J	K	L	M	N	O	P	Q	R
30-60	200	6	6	100	300	325	275	432	105	353	249	285	122	197	107	400	540	104
75/90	200	6	6	100	300	405	355	432	105	353	249	365	162	277	107	400	540	104

2.6 AIR/FLUE DUCT SPECIFICATION

The appliance is supplied complete with a standard flue terminal which is suitable for a wall thickness up to 330mm. For wall thicknesses in excess of 330mm use Rear Flue extension duct (955081). Dimension as shown in Fig. 2a)

The following additional concentric flue kits are also available as optional extras.

For side outlet horizontal (or raised) applications:

Top Outlet HORIZONTAL Connection Kit (955080) is available as an optional extra. The kit comprises internal connector elbow assembly, 90 degree flanged elbow, vertical flue turret socket, telescopic flue outer and inner seal.

Extension duct (955065): each extension duct extends the flue length by up-to 767 mm.

90° Extension Elbow (954011): This is an in-line elbow and mechanically different from the flanged elbow, but has the same equivalent length of 767 mm.

45° Extension Elbow (954010): Allows an additional bend in the flue and has an equivalent length of 384 mm.

For vertical flue applications:

Top Outlet VERTICAL Connection kit (955082) is available as an optional extra (For use with vertical flue kit 988378) comprising internal connector elbow assembly and 425mm flue pipe.

Vertical Flue Kit (988378): For vertical roof terminal applications. The kit comprises of vertical terminal, pitched roof flashing, reducer sockets and vertical turret.

These optional flue kits may be used to produce an extensive range of flue options.

Variations upon these illustrations may be used providing that the following rules are strictly obeyed:

a) Determine the type of flue applications and chose the appropriate flue option requirements.

b) Ensure that the maximum allowable flue length of the flue system doesn't exceed:

HERO 30 - 75	HERO 90
a. 4000 mm vertical	a. 3200 mm vertical
b. 3000 mm horizontal	b. 2000 mm horizontal

c) The standard terminal must always be fitted horizontally. The vertical terminal must always be used if a vertical roof outlet is required.

d) The flue must only terminate in a horizontal or vertical position. However 90° flue elbows may be used to drop the height of the flue system by 500 mm.

e) For side outlet horizontal or vertical flue applications the flue system must use either a flanged elbow or a flanged socket at the entry/exit to the appliance.

f) All joints must be correctly made and secured in accordance with the installation instructions.

Installation instructions for installing the appliance with a standard flue (Fig 2) are included in the main text of these instructions (section 4.5). Additional instructions for flue systems incorporating vertical applications are given in the Halstead Flue Guide and User Instructions as part of the flue kit.

2 SPECIFICATION FOR STANDARD AND SIDE HORIZONTAL FLUES

(Refer to section 2.6(b) for maximum allowable lengths)

2(a)

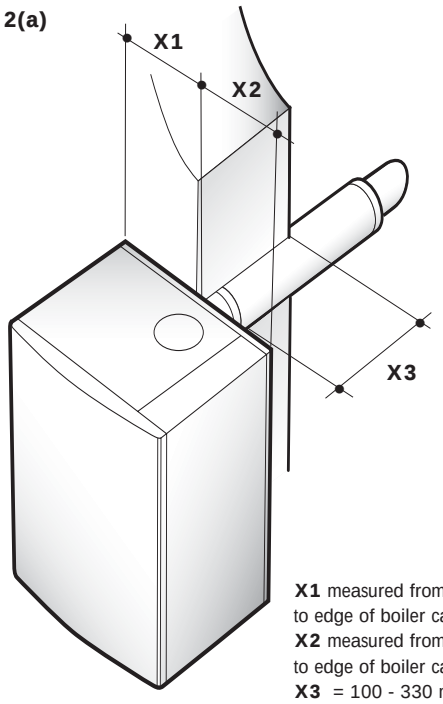

X1 measured from centre line of rear outlet to edge of boiler casing = 180 mm
X2 measured from centre line of rear outlet to edge of boiler casing = 220 mm
X3 = 100 - 330 mm
'**X3**' can be extended to 820mm for Hero 30 - 75, but only extended to 630mm for the Hero 90 with rear flue outlet extension kit 955081

2(b)

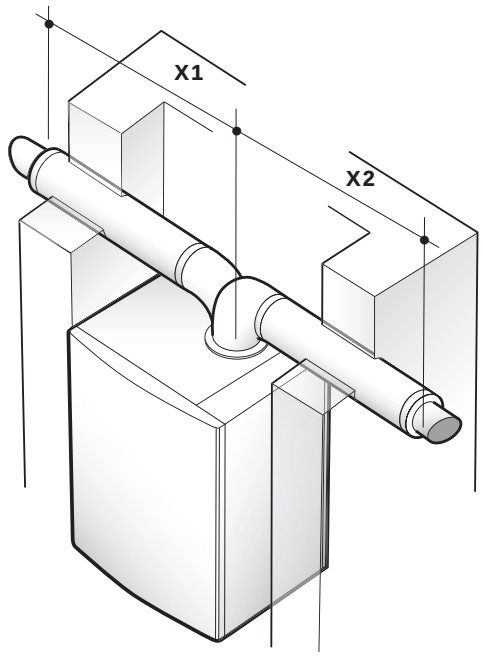

X1 = 365 - 820mm
X2 = 270 - 820mm
measured from the boiler outlet centre line to the outside wall face

Note: For side horizontal flue application flue kit 955080 is required.

3 SPECIFICATION FOR VERTICAL FLUES

3(a)

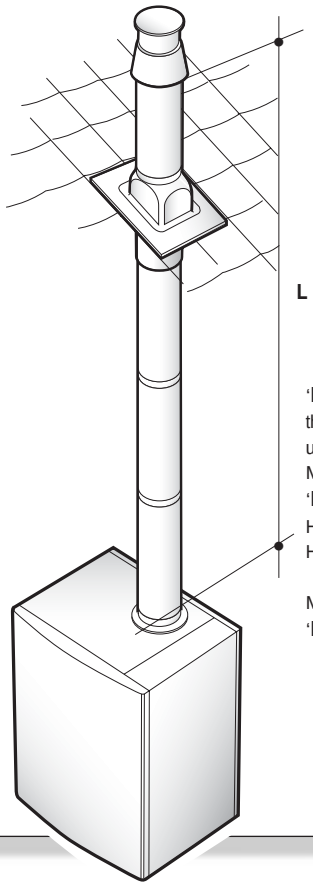

'**L**' measured from the top of the boiler casing to the underside of the air cowel.
Maximum allowable length of '**L**' for:
Hero 32 - 75 = 4000mm
Hero 90 = 3200mm

Minimum allowable length of '**L**' is 560mm

3(b)

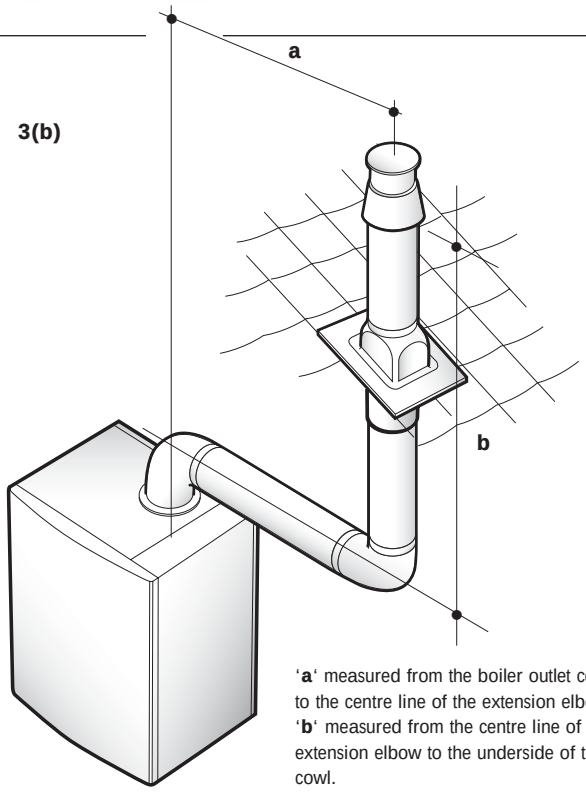

'**a**' measured from the boiler outlet centre line to the centre line of the extension elbow.
'**b**' measured from the centre line of the extension elbow to the underside of the air cowl.
Maximum allowable flue length of '**a**' + '**b**' = Hero 30 - 75 2460mm, Hero 90 1666mm

Note: For vertical flue application flue kit 955082 and 988378 is required.

2.7 SE-DUCT APPLICATIONS

Important Note~ The HERO 30 IS NOT SUITABLE FOR SE-DUCT APPLICATIONS.

SE-Ducts should conform to the requirements of BS 5440 part 1:2000 clause11.

The entry of the concentric air / flue duct should be as close to the centre of the entry face of the SE-DUCT as possible. It is very important that the concentric air / flue duct is not positioned in the corner of the SE-DUCT.

The terminal flue duct kit supplied with the appliance is suitable for installation in a SE-DUCT application. The Installation and Servicing Instructions should be used for the complete installation with the exception of the following:

a) The external wall flue sealing ring shall not be used.

b) Only horizontal flue installations are suitable for SE-DUCT applications.

c) The minimum wall thickness flue length shall not be less than 100mm.

d) The maximum wall thickness flue length shall not exceed 820mm. NOTE~ The HERO 90 is only suitable for a maximum wall thickness flue length of 620mm.

e) It is important when installing the flue terminal duct into the SE-DUCT that:

a) the air inlet duct shall protrude 10mm into the SE- DUCT

b) the terminal rain shield is inverted (up-side down).

(See Fig 4)

4 **FLUE SYSTEM APPLICATION**

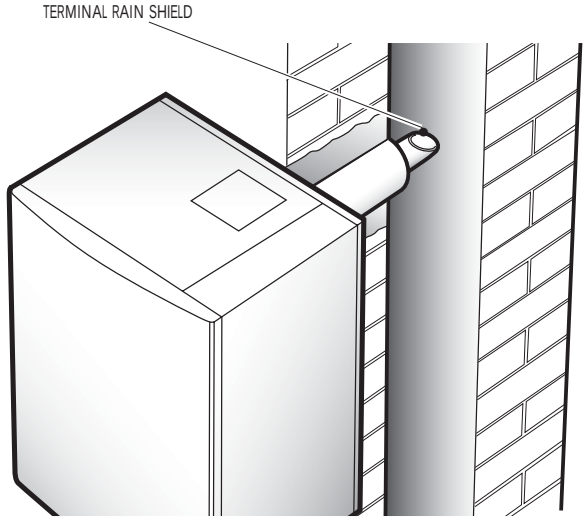

5 **EXPLODED DIAGRAM**

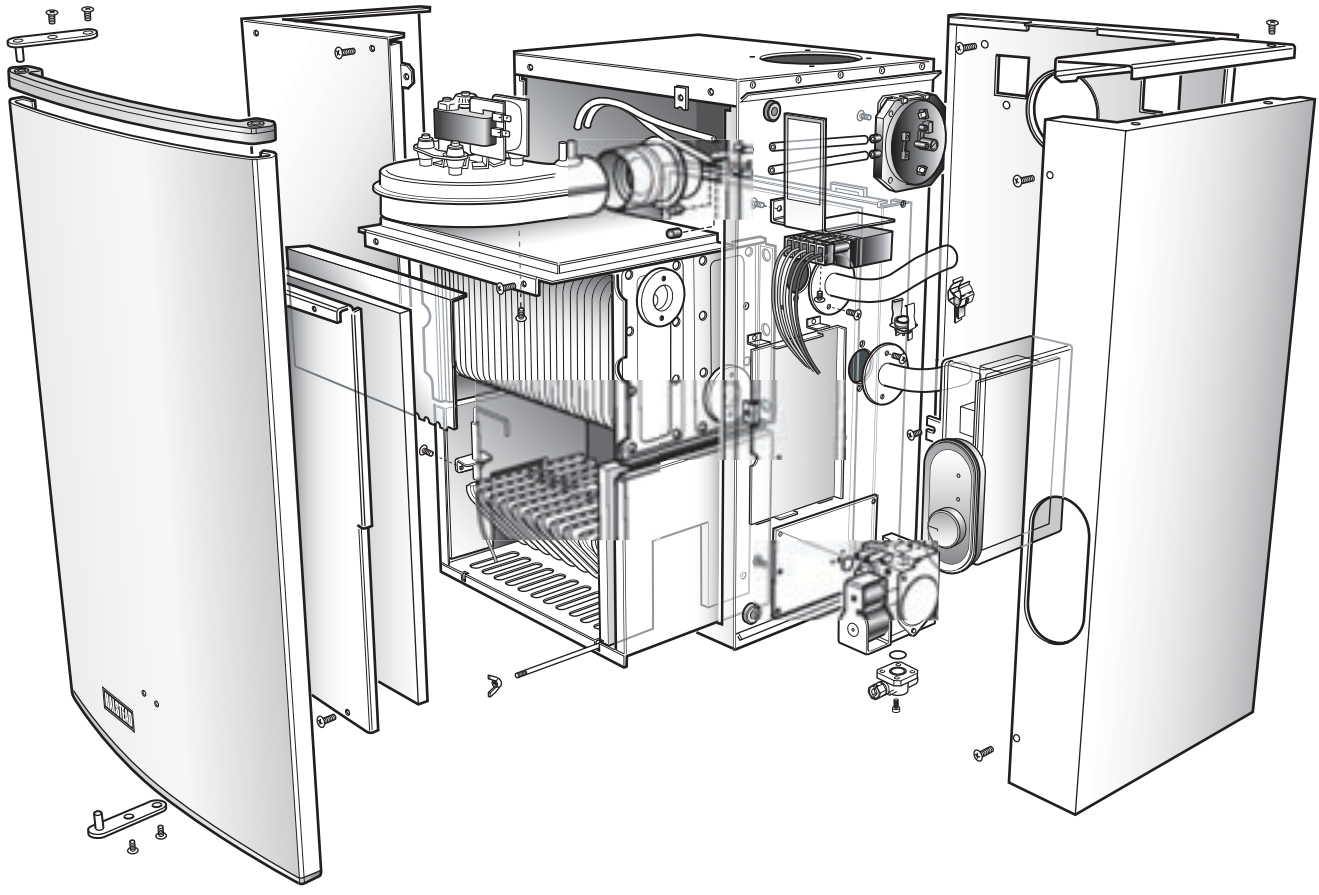

3 INSTALLATION REQUIREMENTS

3.1 STATUTORY REQUIREMENTS

GAS SAFETY (INSTALLATION AND USE) REGULATIONS (CURRENT EDITION)

The appliance is suitable only for installation in GB and IE and should be installed in accordance with the rules in force.

In GB, the installation must be carried out by a CORGI Registered Installer. It must be carried out in accordance with the relevant requirements of the:

Gas Safety (Installation and Use) Regulations

The appropriate Building Regulations either The Building Regulations, The Building Regulations (Scotland), Building Regulations (Northern Ireland).

The Water Fittings Regulations or Water byelaws in Scotland.

The Current I.E.E. Wiring Regulations

Where no specific instructions are given, reference should be made to the relevant British Standard code of Practice.

In IE, the installation must be carried out by a Competent Person and installed in accordance with the current edition of I.S.813 "Domestic Gas Installations", the current Building Regulations and reference should be made to the current ETCI rules for electrical installation.

It should also be in accordance with the relevant recommendations in the current editions of the following British Standards and Codes of Practice: BS5449, BS5546, BS5440:1, BS5440:2, BS6798, BS6891, Institute of Gas Engineer document IGE/UP-7 and BS7074 (expansion vessel), and IS813 for IE.

IMPORTANT NOTE: Manufacturer's instruction must NOT be taken in any way as overriding statutory obligations.

3.2 BOILER LOCATION

The following limitations MUST be observed when siting the boiler:

a) The boiler is not suitable for external installations. The position selected for installation should be within the building, unless otherwise protected by a suitable enclosure, and MUST allow adequate space for installation, servicing and operation of the appliance, and for air circulation around it (Section 2.3 and 3.4).

b) This position MUST allow for a suitable flue system and terminal position. The boiler must be installed on a flat vertical wall which is capable of supporting the weight of the appliance and any ancillary equipment.

c) If the boiler is to be fitted in a timber framed building it should be fitted in accordance with the British Gas publication 'Guide for Gas Installations In Timber Frame Housing', Institute of Gas Engineers document IGE/UP-7. If in doubt, advice must be sought from the Local Gas Supplier.

d) The appliance is approved to a protection rating of IP20. Therefore if the appliance is to be installed in a room containing a bath or a shower, any electrical switch or control utilising mains electricity must be so situated that it cannot be touched by a person using the bath or a shower. Attention is drawn to the requirements of the current BS7671 (I.E.E Wiring Regulations, and in Scotland the electrical provisions of the Building regulations applicable in Scotland.

6 FLUE TERMINAL POSITION

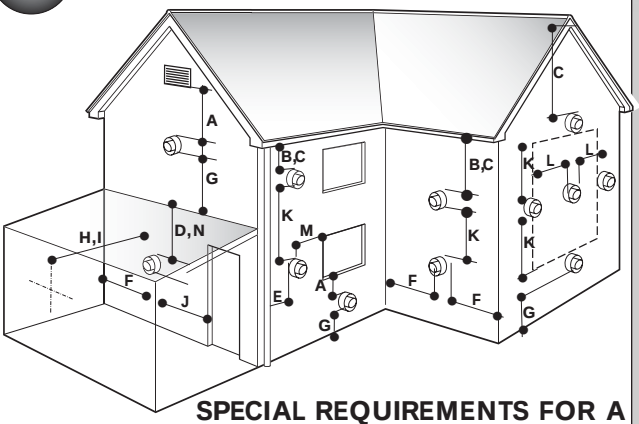

SPECIAL REQUIREMENTS FOR A VERTICALLY BALANCED FLUE

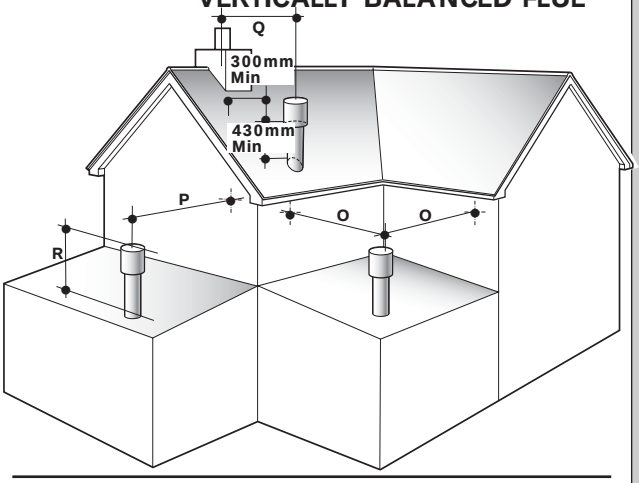

	Position	Minimum spacing	
A	Directly below an openable window, air vent, or any other ventilation opening	300mm	12in
B	Below gutter, drain/soil pipe	75mm	3in
C	Below eaves	200mm	8in
D	Below a balcony	200mm	8in
E	From vertical drain pipes and soil pipes	150mm	6in
F	From internal or external corners	300mm	12in
G	Above adjacent ground or balcony level	300mm	12in
H	From a surface facing the terminal	600mm	24in
I	Facing terminals	1200mm	48in
J	From opening (door/window) in carport into dwelling	1200mm	48in
K	Vertically from a terminal on the same wall	1500mm	60in
L	Horizontally from a terminal on the same wall	300mm	12in
M	Adjacent to opening	300mm	12in
N	Below carport	600mm	24in
O	From adjacent wall	300mm	12in
P	From adjacent opening window	1000mm	40in
Q	From another terminal	600mm	24in
R	Minimum height	300mm	12in

e) A compartment used to enclose the appliance MUST be designed and constructed specifically for this purpose. An existing cupboard, or compartment, may be used provided it is modified accordingly. BS 6798 gives details of the essential features of cupboard / compartment design, including airing cupboards.

f) Where installations will be in unusual locations, special procedures may be necessary. BS 6798 gives detailed guidance on this aspect.

3.3 FLUE TERMINAL POSITION

Detailed recommendations for flue installations are given in BS 5440: 1 and :2. The following notes are for general guidance:

a) The boiler MUST be installed so that the terminal is exposed to the external air.

b) It is important that the position of the terminal allows free passage of air across it at all times.

c) It is ESSENTIAL TO ENSURE that products of combustion discharging from the terminal cannot re-enter the building, or any other adjacent building, through ventilators, windows, doors, other sources of natural air infiltration, or forced ventilation / air conditioning.

d) If the terminal discharges into the pathway or passageway check that combustion products will not cause nuisance and that the terminal will not obstruct the passageway.

e) Where the lowest part of terminal is fitted less than 2m (78ins) above the ground, above a balcony or above a flat roof to which people have access, the terminal MUST be protected by a purpose designed terminal guard (optional extra; Part- No. 951505)

f) The air inlet / flue outlet duct MUST NOT be closer than 25mm (1in) to combustible material.

g) In certain weather conditions the terminal may emit a plume of steam. This is normal but positions where this could cause a nuisance should be avoided.

3.4 VENTILATION REQUIREMENTS

Detailed recommendations for air supply are given in BS 5440:2. The following notes are for general guidance.

a) It is not necessary to have a purpose provided air vent in the room or internal space in which the appliance is installed.

b) If the boiler is to be installed in a wall cupboard permanent air vents are required for cooling purposes in the cupboard at both high and low levels. Both air vents must communicate with either the same internal room / space or to be on the same wall to external air. Each air vent communicating with another room or internal space must have a minimum effective area of: 5625 mm^2 (Top and Bottom).

3.5 GAS SUPPLY

a) The Gas Supplier should be consulted at the installation planning stage in order to establish the availability of an adequate supply of gas.

b) The appliance is for use only on G 20 natural gas (HERO 40 and 60 are also available for LPG).

c) An existing service pipe MUST NOT be used without prior consultation with the Gas Supplier.

d) A gas meter can only be connected by the Gas Supplier or by their contractor.

e) An existing meter and / or pipework should be of sufficient size to carry the maximum boiler input plus the demand of any other installed appliances (gas consumption under Section 2) and in accordance with BS 6891. **A minimum of 22mm dia. pipework is required to within 1metre of the appliance gas cock**.

f) The governor at the meter shall provide a constant working outlet pressure of between 18 – 25 mbar (37 mbar for LPG) when all appliances on the system are running. If the gas pressure is outside that band the Gas Supplier has to be consulted.

g) The gas supply line must be purged. WARNING: Before purging open all doors and windows, also extinguish any cigarettes, pipes and any other naked lights.

h) The complete installation must be tested for gas soundness.

3.6 DATA LABEL

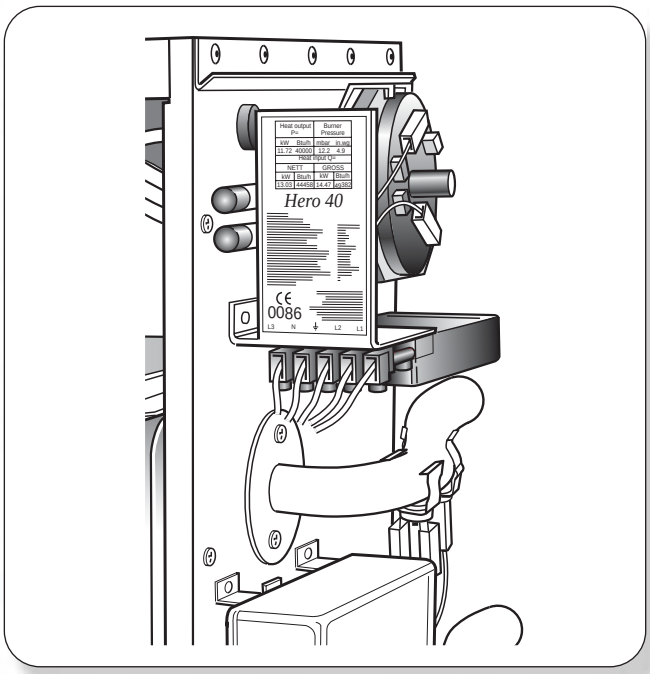

3.7 ELECTRICAL SUPPLY

The mains supply required is 230 V – 50 Hz fused at 3 A, via a fused double pole isolator with a contact separation of at least 3 mm in both poles. This should be a permanent connection to the fixed wiring of the system.

There must be only one common isolator for the boiler and its control system, and it must be provide complete electrical isolation.

The power supply cable to the appliance should be at least 0.75 2mm (24 x 0.2 mm) PVC heat resistant, as specified in table 16 of BS6500.

All external wiring to the boiler must be in accordance with the latest I.E.E. Wiring Regulations, and any other local regulations which apply.

The appliance must be earthed. .

In the event of any electrical fault after installation of the appliance, preliminary electrical system checks must be carried out, i.e. Earth Continuity, Short Circuit, Polarity and Resistance to earth.

All fuses must be ASTA approved to BS1362.

3.8 CENTRAL HEATING WATER SYSTEMS

The boiler must not be used for direct hot water supply. The hot water cylinder must be of the fully indirect (double feed) type, Self priming (single feed) cylinders MUST NOT BE USED.

The boiler is supplied with 22mm copper tail ends for use with copper tubing to BS2871 on fully pumped systems.

The boiler is NOT suitable for semi gravity systems.

Drain down devices must be fitted at the lowest points of the system.

The boiler has a built-in frost protection function when in stand-by mode. However, a system frost protection thermostat is recommended if the boiler is installed in locations which are vulnerable to freezing or away from the living area of the building, e.g. garage.

The pump, with its isolation valves, should be fitted in the heating flow pipework from the boiler. The flow rate should be set to produce a temperature differential of 11°C between the flow and return pipes at maximum heat output (Fig 7 – Heat exchanger resistance curve).

All components of the central heating water system shall be suitable for a working pressure of 3 bar and temperature of 110°C. Halstead boilers recommend that any plastic pipe used should not terminate within 2 metres of the appliance. Care should be taken to ensure that air locks are not present in the appliance or pipe run.

7 HYDRAULIC FLOW GRAPH

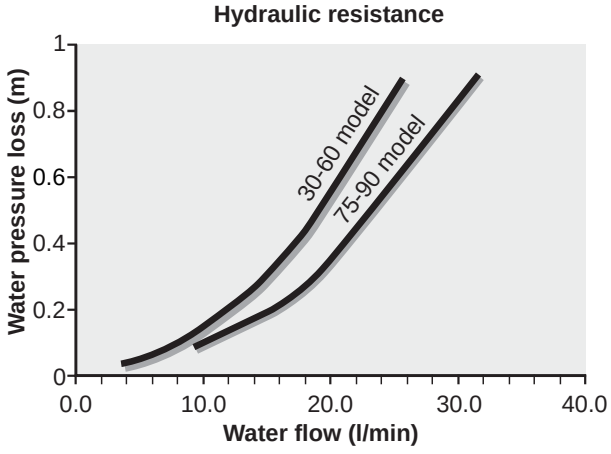

3.8.1 OPEN VENTED SYSTEMS

A typical open vented system is shown in Fig 8. An open vent pipe of 22 mm diameter must be fitted in the boiler flow and terminated above the cold feed, discharging into the expansion cistern.

The expansion cistern should not have a smaller capacity than 22 litres (5 gallons).

The cold feed pipe should be of 15 mm minimum diameter.

The expansion cistern should have a lid to prevent evaporation loss and debris falling into.

The maximum height of the cistern to the boiler is 30 m (100 ft) which is the equivalent of 3 bar static water pressure. The minimum height is 1.2 m (47 in.) or 0.12 bars.

The combined heating and hot water pipes must be connected to the 22 mm pipe tails. It is recommended to route the pipes upwards for better venting and circulation. However, if the pipes are routed downwards appropriate air vents at the highest point of the boiler are required.

3.8.2 SEALED SYSTEMS

The installation of a sealed system must comply with the appropriate requirements of the current issue of BS4814, BS5449, BS6759, BS6798 and BS7074 and recommendation R24.2 of the Water Regulations Guide. For IE the current edition of I.S. 813.

A typical sealed water system is shown in Fig 9.

The following components and guidance have to be considered:

Safety Valve: It must comply with the requirements of BS759 and must be fitted to the flow pipe as near as possible to the boiler with no restriction in the flow before the valve.

The valve should be so positioned so that any discharge of steam or water cannot cause any harm to occupants or electrical installations.

Pressure gauge: A pressure gauge with a range of 0 - 4 bar must be fitted so that it is visible to the person filling or servicing the system.

Expansion tank: The expansion tank must be connected close to the inlet side of the pump and must suit the water volume of the system.

The volume of water in the appliance is given in Section 2.

EXPANSION VESSEL REQUIREMENTS

Vessel charge and initial system pressure	bar	0.5	0.75	1.0	1.5
	psi	7.3	11	14.5	21.8
Total water content of system using 8ltr. (1.54gal) capacity expansion vessel		96ltr	84ltr	73ltr	50ltr
		21gal	18gal	16gal	11gal
For systems having a larger capacity multiply the total system capacity in litres (gallons) by the factor to obtain the total minimum expansion vessel capacity required litres (gallons)		0.0833	0.093	0.109	0.156

The system pressure should be not less than the static height, this being the highest point in the system above the expansion tank.

Hot Water Cylinder: The cylinder should be of the indirect type, suitable to operate at a total pressure 3 bar. It is also recommended to use indirect cylinders with a heating coil capacity of at least 30% above the maximum heat output of the boiler. If the heating coil output is less than the boiler output it makes the system less efficient and the recovery time gets poorer.

Filling Point: The system must be provided with a low level filling point fitted with a shut off valve. The method filling the system should comply with the Water Supply (Water Fittings) Regulations – 1999 and the local Water Authority Regulations.

8 OPEN VENTED SYSTEM

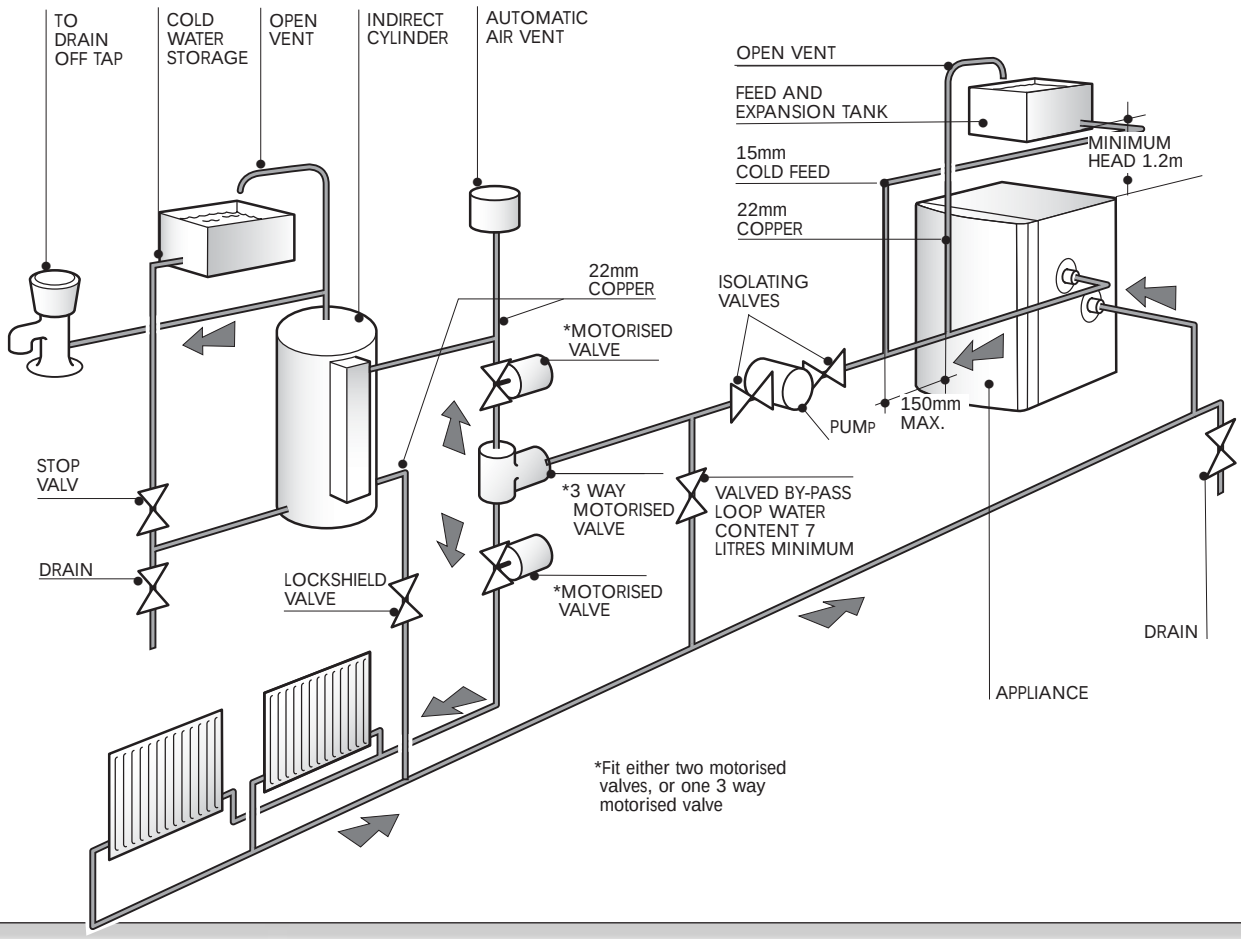

9 SEALED WATER SYSTEM

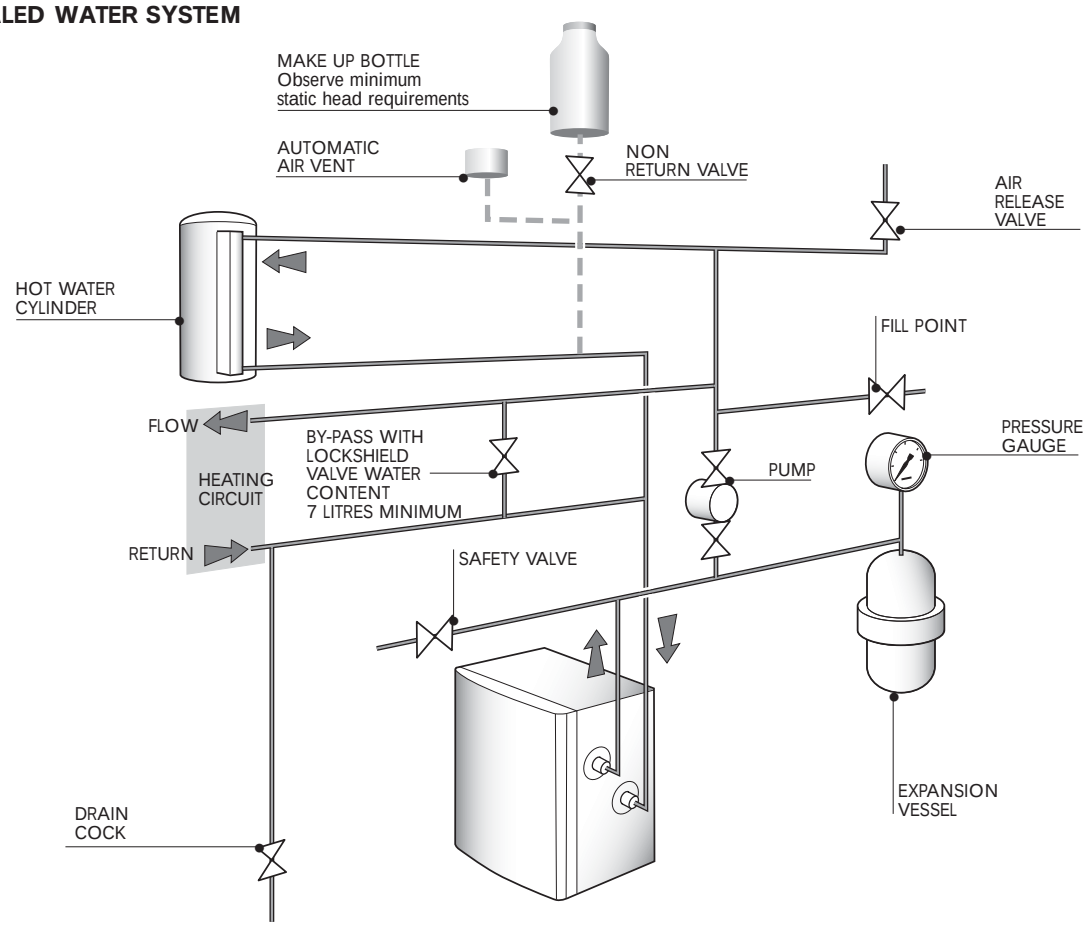

4 INSTALLING THE APPLIANCE

4.1 UNPACKING THE APPLIANCE

The appliance and standard flue kit is supplied in a single cardboard carton. In addition various optional flue kits are available as described in Section 2.6.

Open the carton in accordance with the packaging details.

Remove the appliance, the terminal flue kit and other components and check the contents against the following list:

Boiler Package:

Boiler (assembled, incl. wall plate)	Installation and User
Benchmark Logbook.	instructions.
Front panel door.	
Plastic bag containing:	6 x fixing screws.
6 x wall plugs.	Outer wall sealing ring (grey)
Outer wall sealing ring (white)	2 x self tapping screws
2 x hinges.	4 x screws.
Standard flue terminal.	

Manual Handling Note: During the appliance installation it will be necessary to employ caution and assistance whilst lifting as the appliance exceeds the recommended weight for a one man lift.

Take care to avoid trip hazards, slippery or wet surfaces.

10 WALL MOUNTING PLATE

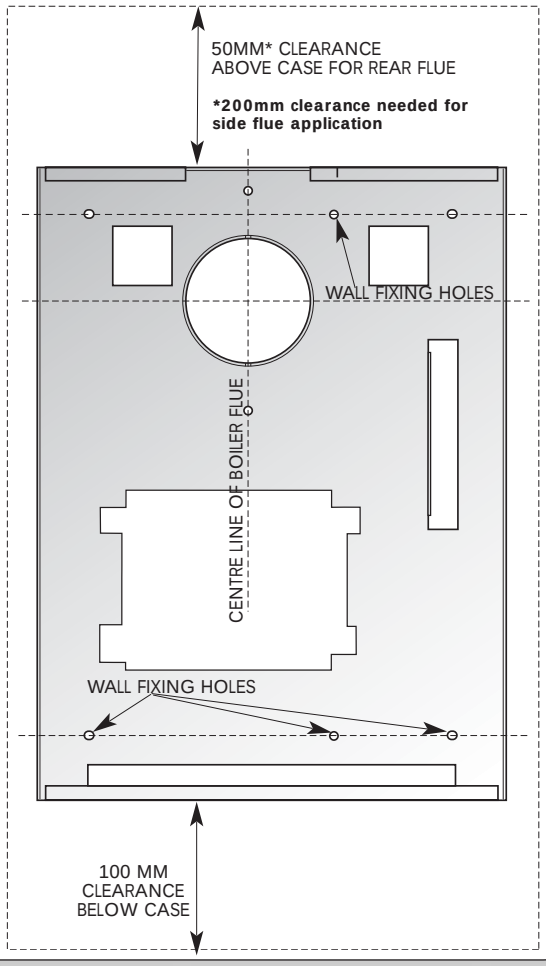

4.2 PREPARING THE WALL / APPLIANCE

Before installing the appliance ensure that the chosen location is suitable (Section 3.2) and that the requirements for flue position (Section 3.3) and minimum clearances (Section 2.4) are satisfied.

These minimum clearances are essential to provide access for servicing.

a) Remove the wall plate from the boiler and use it as a template to mark the wall in the desired position (Fig 10). Ensure that the centre line is level.

b) The appliance is supplied ready assembled for rear outlet flue installations. For all other flue options proceed to section 4.2.2

4.2.1 REAR OUTLET FLUE

a) Mark the position of the flue exit hole if it is a new installation, or hold the wall plate over the existing flue hole in the wall.

b) Mark the position of the six wall plate fixing holes. Drill the holes using a 8mm masonry drill and fit the wall plugs provided.

If outside access to flue is possible:

c) Cut a hole through the wall of at least 100mm (4 in) diameter to accept the flue/air duct.

d) Accurately measure the wall thickness. The standard flue terminal is suitable for a wall thickness up to 330mm. For a wall thickness in excess of 330mm see section 2.6 for optional extension duct kits.

e) Secure the wall mounting plate in position.

f) Fit the external sealing ring (grey) to the terminal as shown in Fig 11. Measure from the inside of the external sealing ring, **the wall thickness + 30mm** (Fig 11) and cut the air/flue duct appropriately, ensuring that the cut is square and free of burrs or debris.

g) Push the air/flue duct terminal through the wall and the wall plate from the outside.

If outside access to flue is NOT possible (eg. second or higher storey):

h) The drilled hole should be at least 130mm (5ins) diameter to allow for insertion of a wall liner (available as an optional extra).

i) Once the air/flue duct has been cut to length (as above), fit the outer (grey) seal to the air/flue duct. Feed the air/flue duct through the hole from inside of the room and ensure that the seal is seated properly on the outer wall.

j) Ensure that a full 30mm protrudes from the inside wall, drill through the air duct and fixing to the wall plate using the 3 self tapping screws provided. **Ensure the terminal is fitted horizontally and the correct way up with the rain shield at the top (see Figure 11)**

k) Slide the two 10mm thick silicon sponge flue seals over the protruding 30mm of the air/flue duct.

l) Remove both casing panels from the boiler, (six screws). Fig 11

m) Lift the boiler into position; the rear bottom edge of the boiler onto the bottom return edge of the wall plate. Push the top of the appliance back ensuring that the fan outlet (Fig12) correctly engages into the flue terminal. Secure the boiler using the two 'over centre' clamps on the top rear of the appliance. Fig 11.

11 FITTING BOILER ONTO WALLBRACKET

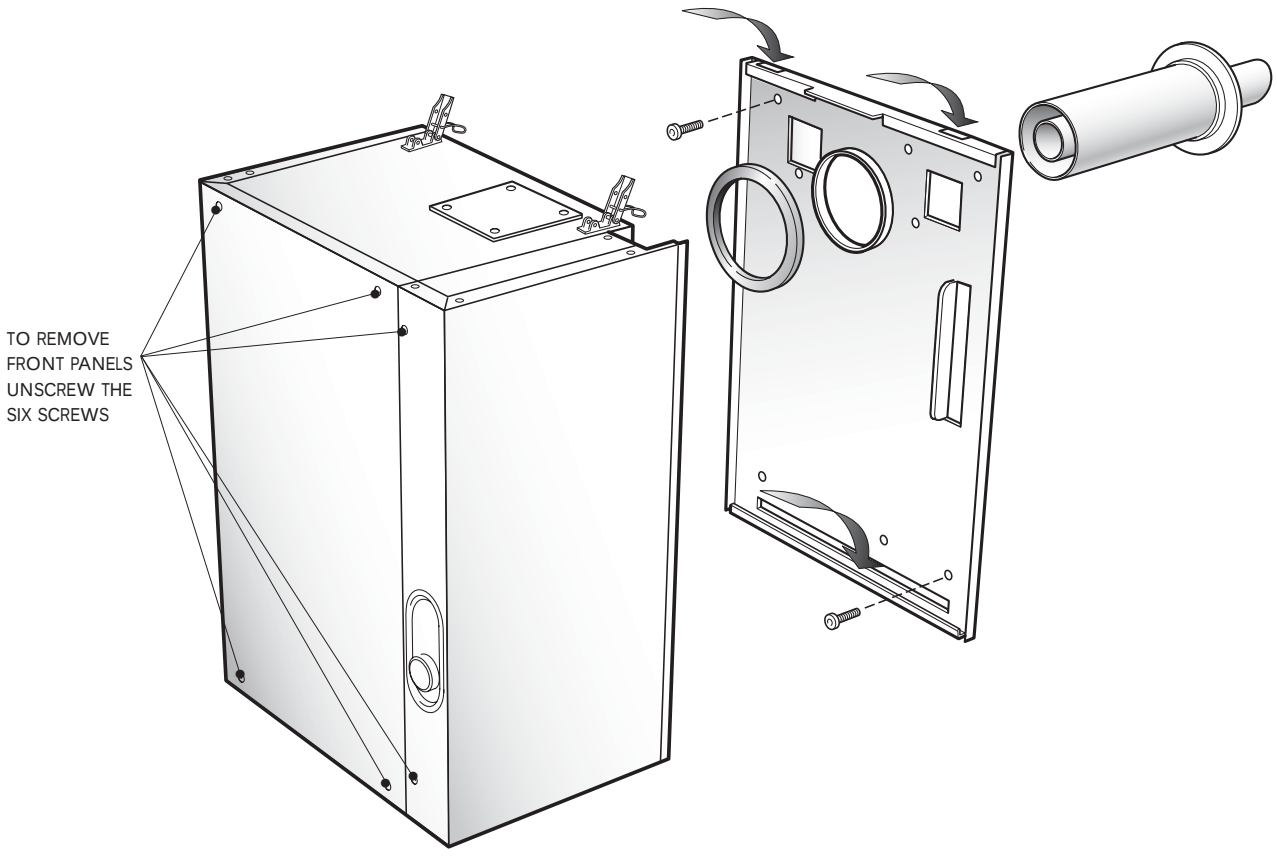

12 FITTING THE ADAPTOR TUBE TO FAN

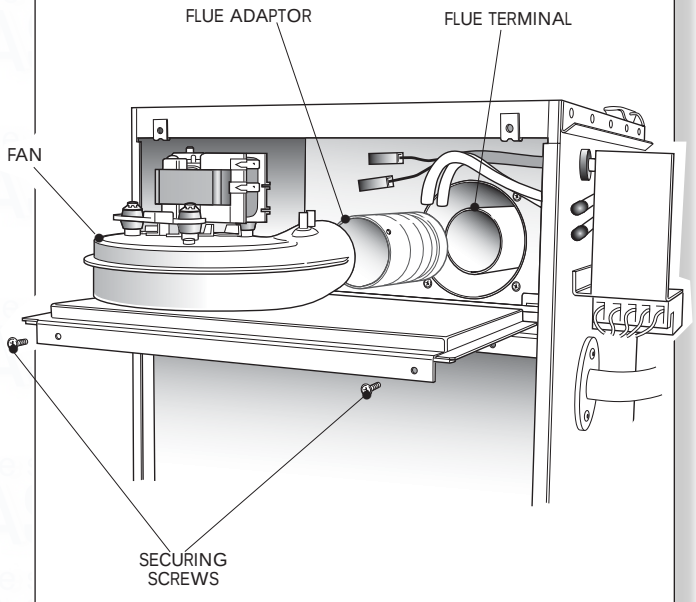

13 FITTING THE FLUE RESTRICTOR

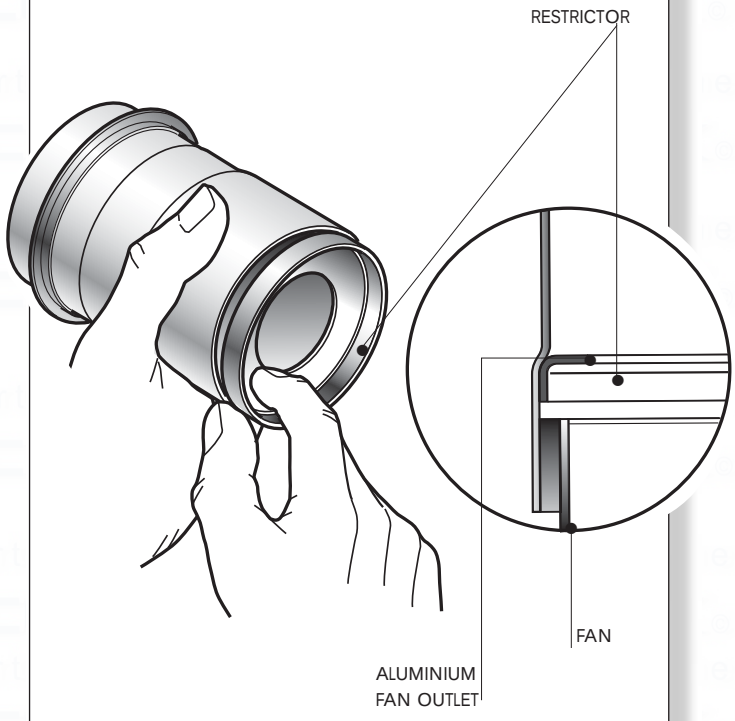

14 MARKING THE POSITION OF A SIDE FLUE

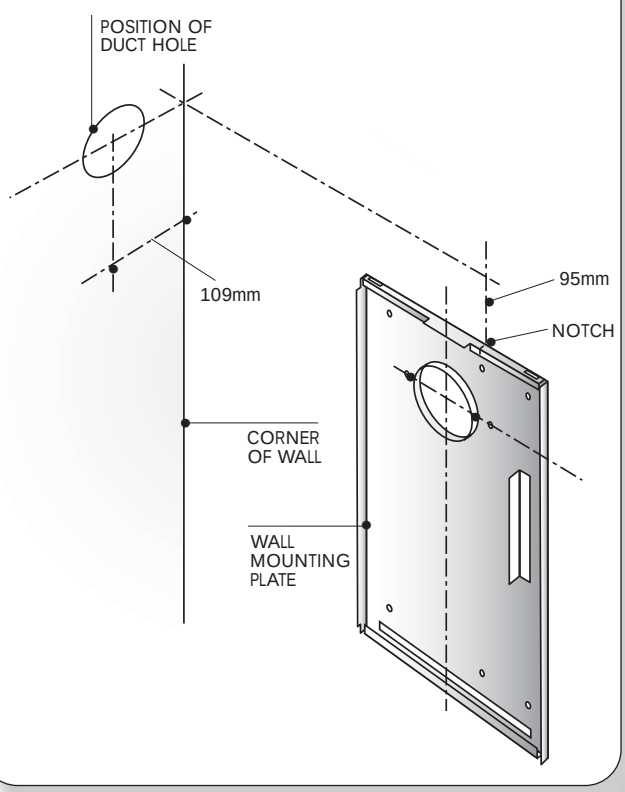

4.2.2 TOP OUTLET FLUE

a) Having chosen the desired location for the boiler, for all top outlet flue connections the appropriate (optional extra) kit(s) as detailed in section 2.6 will be required.

b) The centre line for the flue system is slightly off-centre and indicated on the wall plate with a notch. Draw a vertical line from the notch as shown in Fig 14.

c) The **Horizontal turret** centre line for side outlet flues is 100mm above the wall plate, extend the line horizontally until reaching the sidewall face, and then draw the position of the air/flue duct hole. Cut a hole through the wall of at least 95mm (4 in) diameter to accept the flue/air duct. Note ~ if access to the hole from outside is not possible the hole should be at least 130mm (5 in) diameter to allow for insertion of the wall liner (available as an optional extra).

d) For **Vertical Flue Outlet**, extend the line vertically until reaching the ceiling/roof. The centre line of the flue from the wall is 109 mm. Cut a hole through the ceiling / roof of at least 100mm (4 in) diameter to accept the flue/air duct.

e) For **Offset flue** combinations and additional elbows calculate from the dimensional details in section 2.5 And 2.6 Where the flue should be positioned. Make the necessary hole in the wall / ceiling / roof.

f) Mark the position of the six wall plate fixing holes. Drill the holes using a 8mm masonry drill and fit the wall plugs provided.

g) Secure the wall mounting plate to the wall using the screws provided.

h) Remove both casing panels from the boiler, (6 screws).

i) Lift the boiler into position; the rear bottom edge of the boiler locates onto the bottom return edge of the wall plate. Push the top of the appliance back. Secure the boiler using the two 'over centre' clamps on the top rear of the appliance. (Fig 11)

j) Remove the fan assembly from the appliance (Refer to section 7.5).

k) Remove the appliance top outlet cover plate and relocate onto the rear of the appliance to blank the rear outlet opening.

l) With the fan removed from the fan plate, reposition and secure the fan so that the outlet is directed to the right hand side of the appliance. Refit the fan assembly (Refer to section 7.5).

m) Fit and secure the 60mm Ø elbow (Fig 16) and all other relevant boiler components relating to the flue kit(s) option chosen (Full instructions included in the kits).

n) Ensure the flue duct restrictor ring is in accordance with the the technical specifications in section 2. and is correctly fitted. (Fig13)

4.3 AIR/FLUE DUCT INSTALLATION (HORIZONTAL)

Note~ If the wall thickness is less than 800mm (31 in) the air/flue duct may be fitted without access to the external wall providing that the optional wall liner is used. (This is necessary to seal any cavity and to allow the sealing ring to pass through from inside but still open and provide an adequate seal). The wall liner has a tube diameter of 130mm with a wall thickness of 0.8mm.

All flue duct lengths in excess of 1.5m (59 in) require at least one support bracket in the middle of the duct. (Available as optional extra Part No: 840516)

15 MEASURING THE EXACT FLUE LENGTH

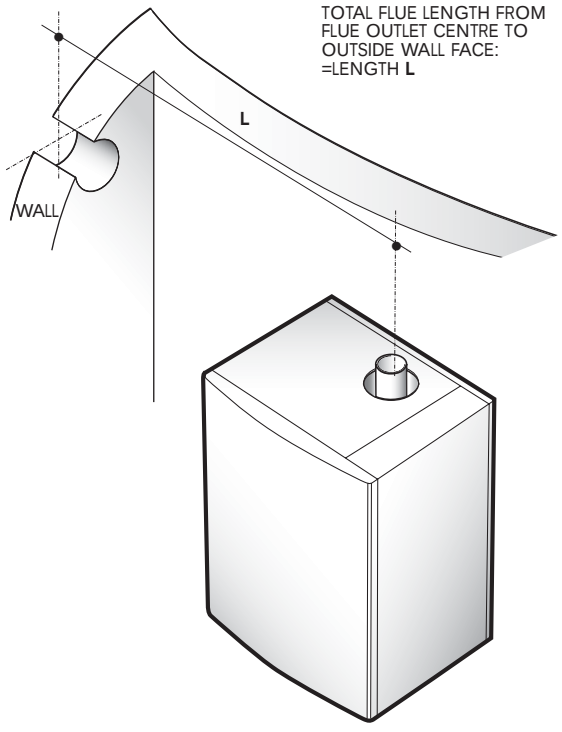

4.31 PREPARING THE HORIZONTAL DUCT

a) Measure the required horizontal flue length as shown in Fig 15.

b) Fit the external sealing ring (grey) to the terminal assembly and assemble the air/flue ducts as shown in Fig 17.

c) Achieve the correct flue length using Fig 17 as a guide. Note that the flue length is measured from the inside of the external (grey) sealing ring. In most cases it will be possible to achieve the required flue length without cutting the ducts. Where necessary cut only the plain ends of extension ducts and **NEVER CUT THE SWAGED END**. Ensure all cuts are square and free from burrs and debris.

d) The horizontal terminal duct should never need to be cut as it slides into both extension ducts and the standard duct. Ensure at least a 50mm (2 in) overlap.

e) Assemble the flue using Fig 17 as a guide. It is important that the steps are carried out in the order stated in Fig 17. Ensure the internal sealing ring (white) is fitted to the system before securing the ducts.

f) Prior to fitting the standard flue duct to the flanged elbow, ensure all 'O'-ring seals are correctly located and intact.

g) All ducts should be secured by drilling two 3.3mm diameter holes and using the self-tapping screws supplied in the flue kit. **ENSURE THE HORIZONTAL TERMINAL IS FITTED HORIZONTALLY AND THE CORRECT WAY UP WITH THE RAINSHIELD AT THE TOP (SEE FIGURE 17)**

16 FIT STRAIGHT AND ELBOW ADAPTOR

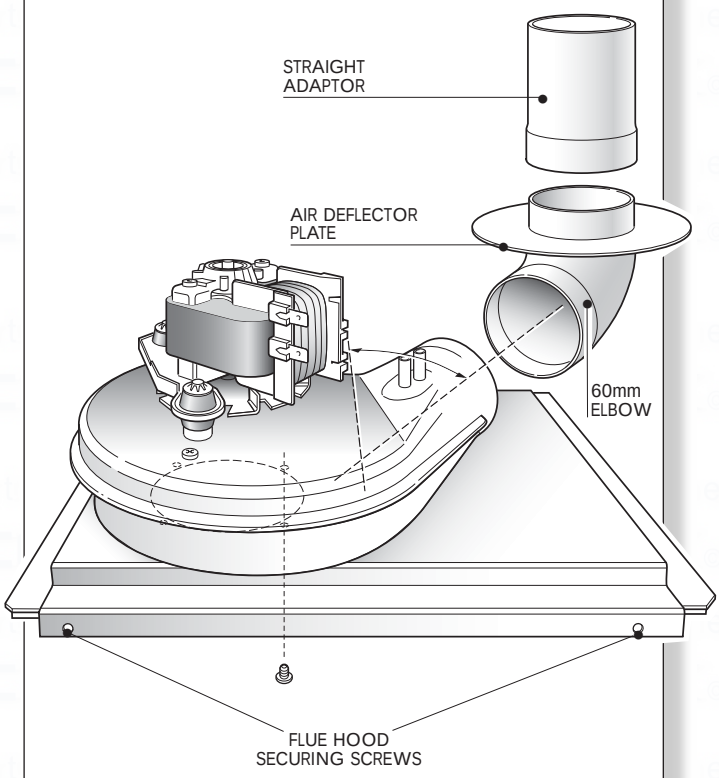

17 ACHIEVING THE CORRECT LENGTH AND ASSEMBLING THE FLUE

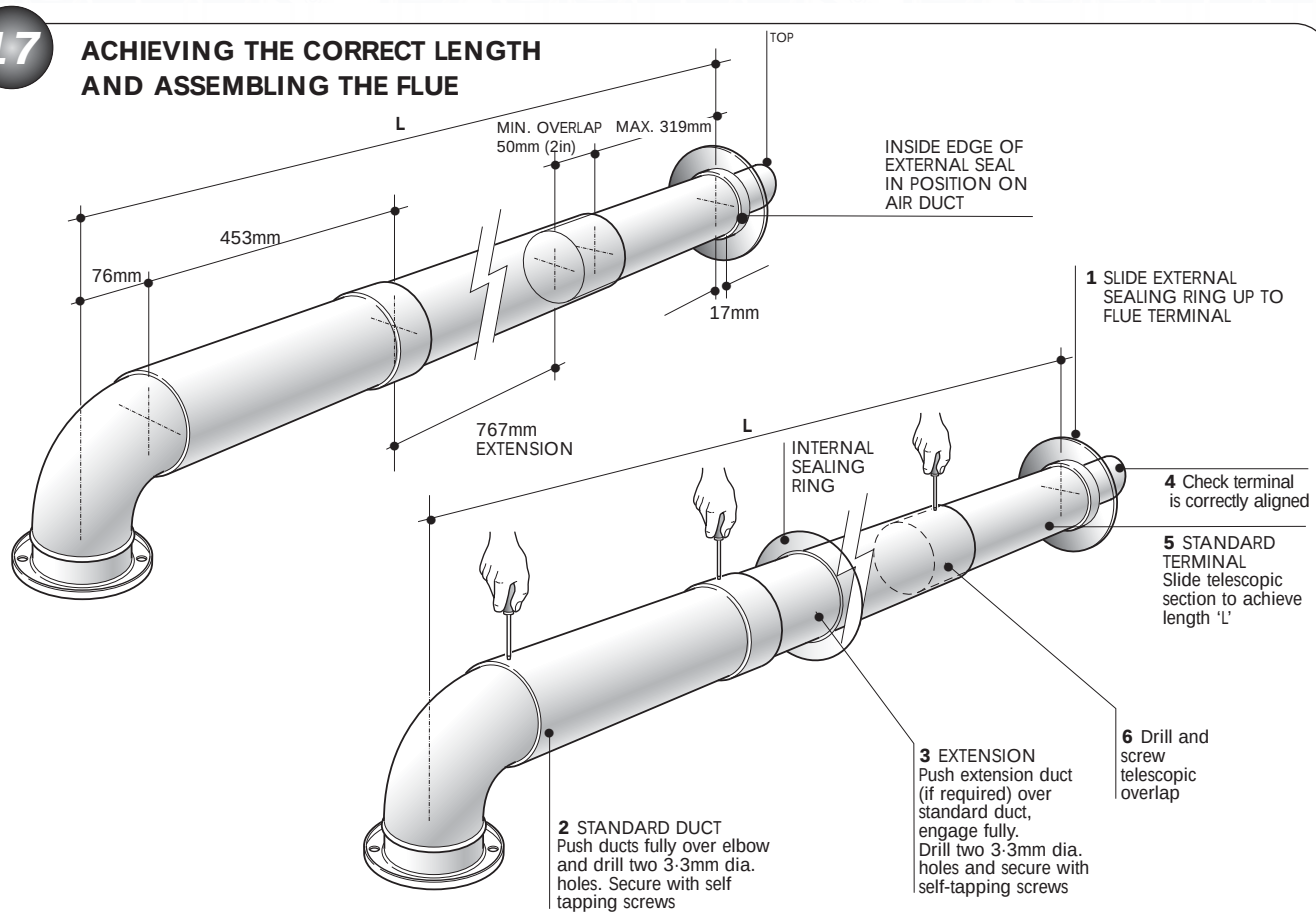

4.3.2 INSTALLING THE HORIZONTAL DUCT FROM INSIDE THE BUILDING

(wall thickness up to 800mm (31 in) only – WALL LINER REQUIRED)

a) Using Fig 18 as a step-by-step guide, insert the terminal end of the flue system with external sealing ring (grey) through the wall liner ensuring that the terminal is the correct way up.

b) Pull the flue system back towards the boiler to seat the external sealing ring against the outside wall.

c) Ensure the necessary gasket and 'O'-ring seal(s) are fitted to the flanged elbow and secure to the boiler using the screws provided (Fig 19).

d) Use the internal sealing ring (white) to make good the internal wall face and check that the terminal is correctly fitted to the outside wall.

e) Ensure all ducts are engaged correctly and secured with the self-tapping screws provided in the kits.

4.3.3 INSTALLING THE HORIZONTAL DUCT FROM OUTSIDE THE BUILDING

(Flue hole diameter 100mm – Wall liner not required)

a) Using Fig 19 as a step by step guide secure the turret elbow to the boiler ensuring that the gasket and 'O'-ring seal(s) are correctly fitted.

b) From outside the building, insert the flue system with external wall sealing ring (grey) fitted to the terminal through the wall. Ensure the terminal is the correct way up.

c) From inside, fit the internal sealing ring (white) and pull the flue system towards the boiler to seat the external sealing ring on the outside wall.

d) Fit and secure the flue system to the turret elbow.

e) Make good the internal wall using the internal sealing ring, and check that the terminal is correctly fitted to the outside wall.

f) Ensure all ducts are engaged correctly and secured with the self-tapping screws provided in the kits.

18 **INSTALLING THE FLUE SYSTEM FROM INSIDE THE ROOM**

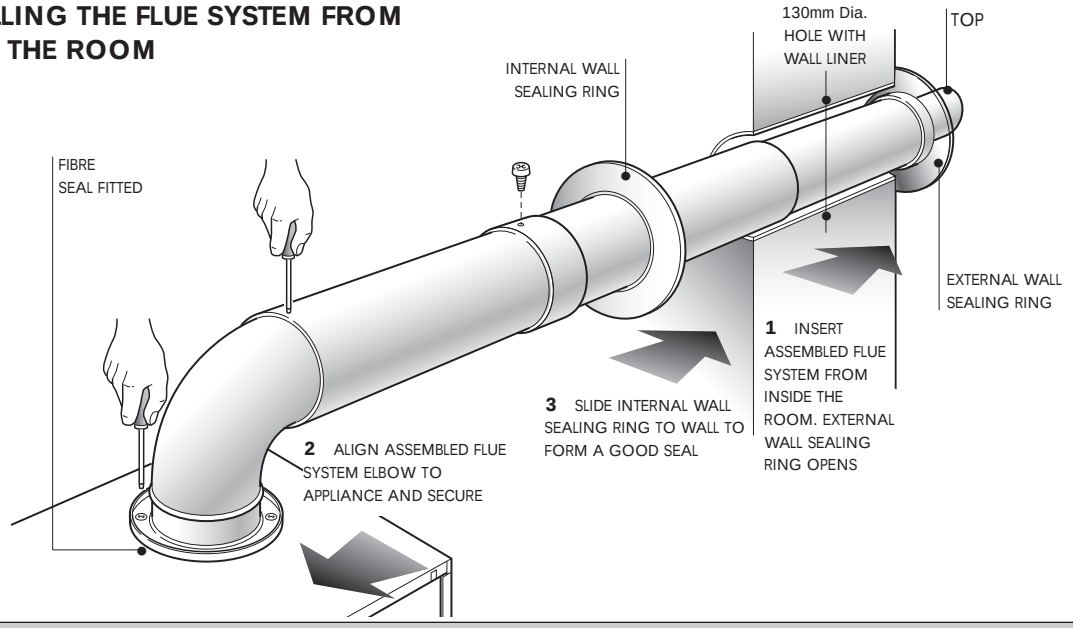

19 **INSTALLING THE FLUE SYSTEM FROM OUTSIDE THE BUILDING**

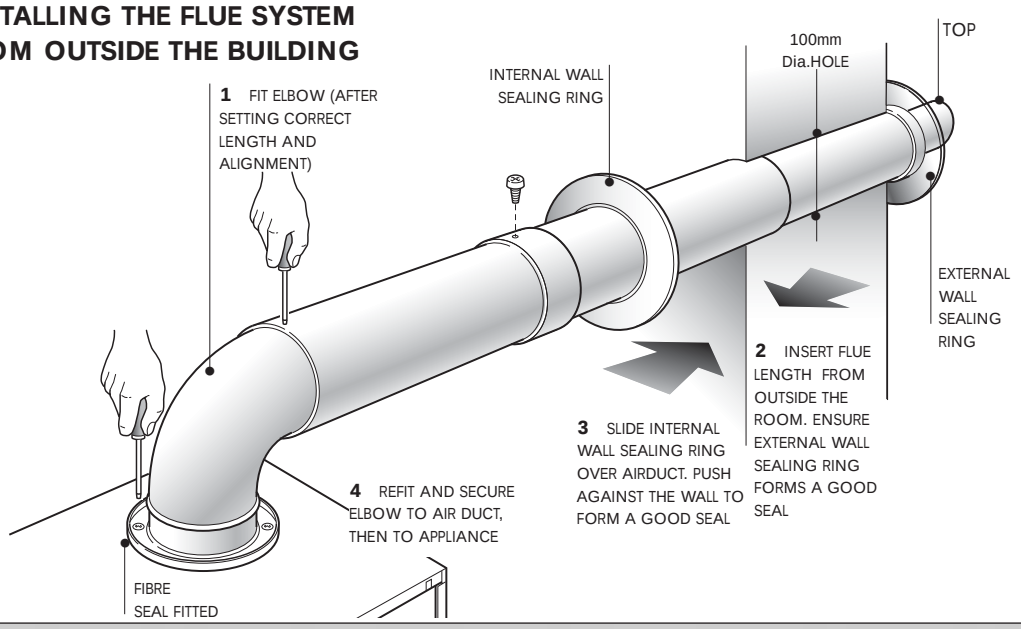

4.3.4 PREPARING AND INSTALLING THE VERTICAL DUCT

a) The vertical flue terminal kit (Part No: 988378) contains full assembly details.

b) Measure the vertical distance from the top of the appliance to the roof line (Fig 20), and calculate the extension ducts required.

c) Starting at the boiler, fit the vertical flue socket with gasket, the standard duct and the required extensions. Ensure all ducts are engaged correctly and secured using the self-tapping screws provided in the kits.

d) Fit the vertical flue terminal adaptors.

e) Working from outside the building, fit the vertical flue terminal ensuring correct engagement of the inner and outer ducts into the flue adaptors.

f) Ensure that the roof flashing and sealing components are secured to the roof.

20 FLUE SYSTEM ASSEMBLY AND DIMENSIONS

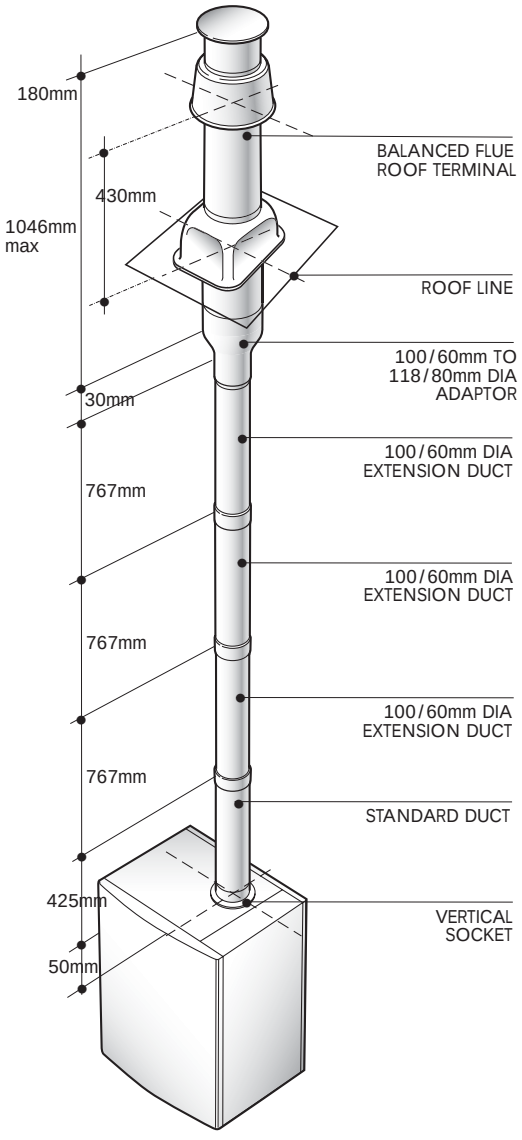

4.4 GAS CONNECTION

Connect the gas supply to the $^1/_2$ inch BSPF (located at the bottom, right hand side of the appliance) isolation valve using a suitable jointing compound. (Fig 21.)

4.5 WATER CONNECTIONS

a) Refer to section 3.8 for detailed information.

b) The appliance is supplied with two 22mm copper tail ends suitable for compression or soldered fittings. **Use extreme care if soldering joints near to the appliance. If boiler is located in tight space it is recommended to remove the pipes from the boiler.**

c) The system **FLOW** must be connected to the **UPPER PIPE**.

The system **RETURN** must be connected to the **LOWER PIPE**.

Note: It is recommended to connect Hero 90 to 28mm system pipes.

21 PIPEWORK

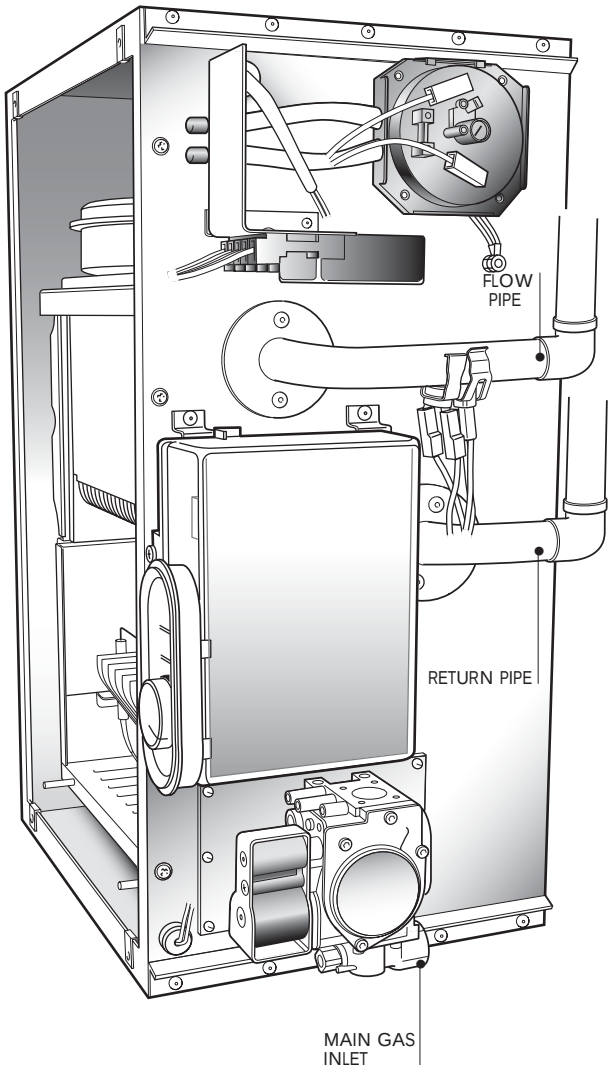

4.6 WIRING INSTRUCTIONS

This appliance must have a permanent mains supply and be earthed.

Use standard colours for the supply:

Brown = Live (L)

Blue = Neutral (N)

Green/Yellow = Earth (E)

Note~ It is highly recommended that this appliance is connected to an external control (timer / programmer) as part of the Approved Code of Practice and guidance Safety and Good Practice Guide 302.

a) Remove the mains supply plug from the appliance and connect the electricity supply, the pump supply and appropriate external controls (using suitable cable) as described below and with reference to Fig 22.

b) Connect the mains supply Live to terminal L1.

c) Connect the pump Live to terminal L2.

d) Connect the external control (timer / programmer) Live to terminal L3.

e) If not connecting an external control, it is necessary to link a switched live between terminals L1 and L3.

f) Ensure all wires are clamped within the plug and that outer insulation is not cut back beyond the clamp.

g) Ensure all Earth wires are longer than the Live and Neutral to ensure it will be last to be disconnected should excessive strain be put on cables.

22 ELECTRICAL CONNECTIONS

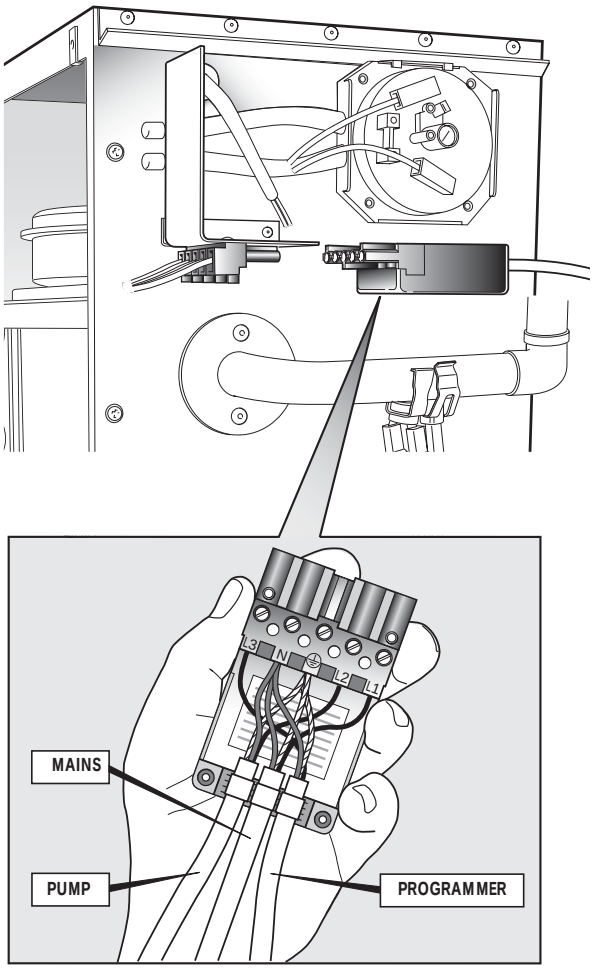

23 FULLY PUMPED 'S' PLAN

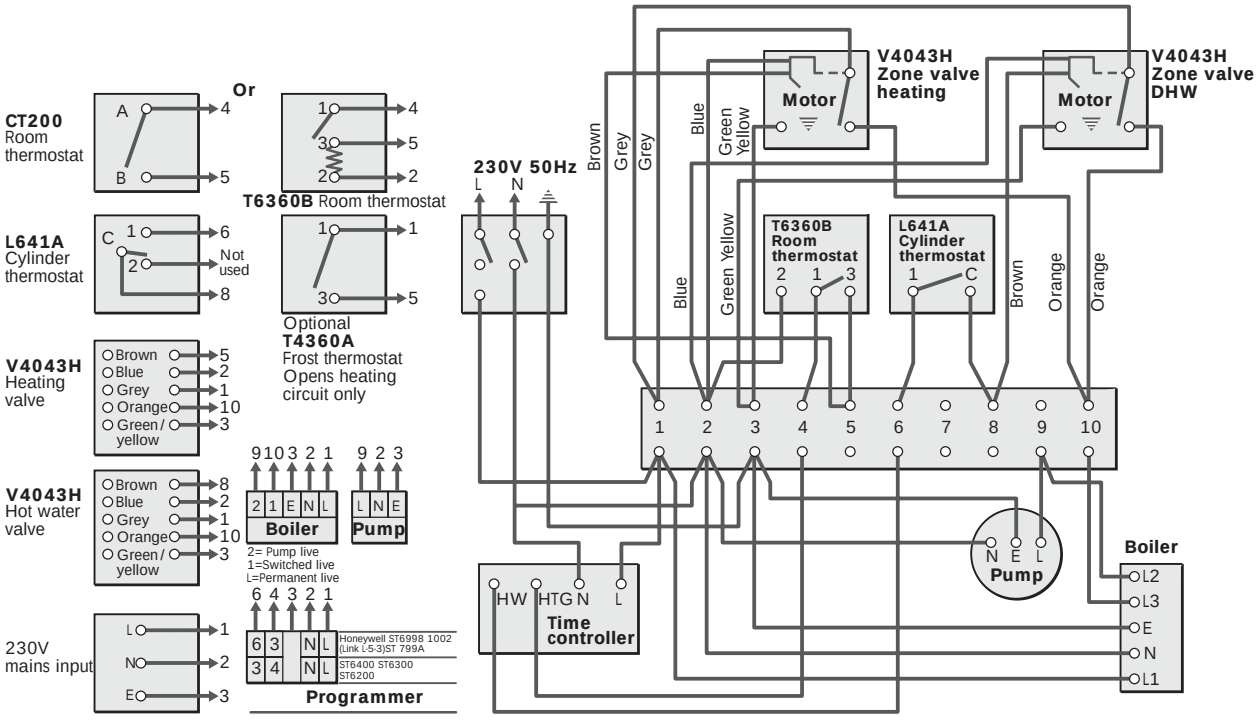

24 FULLY PUMPED 'Y' PLAN

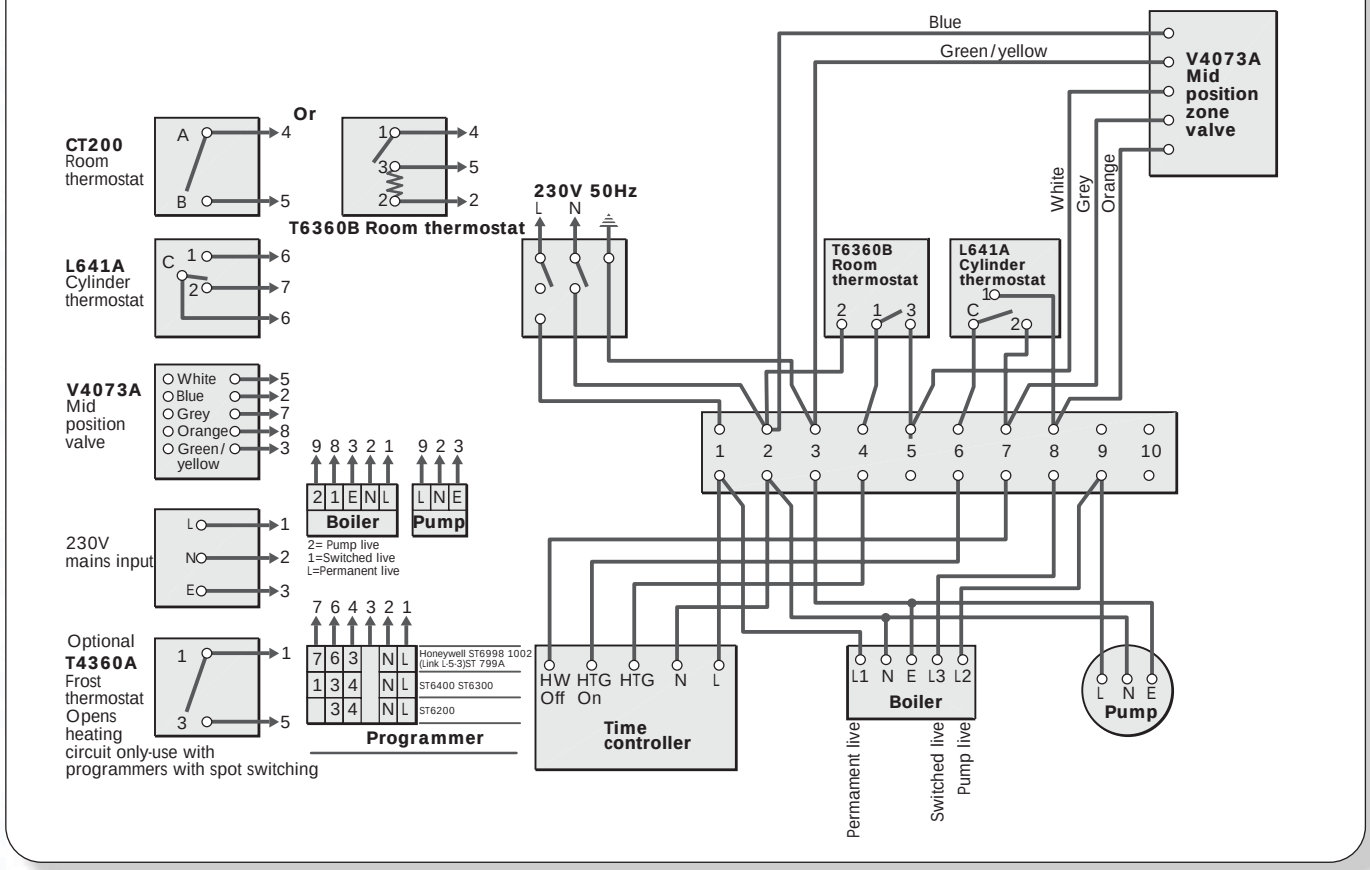

25 UPP15-50 PUMP PLAN - WIRING CENTRE CONNECTIONS

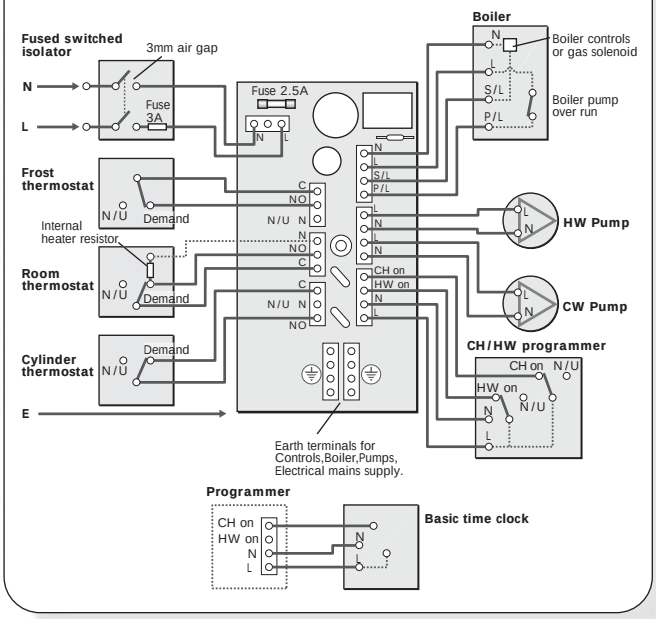

26 TYPICAL PROGRAMMER

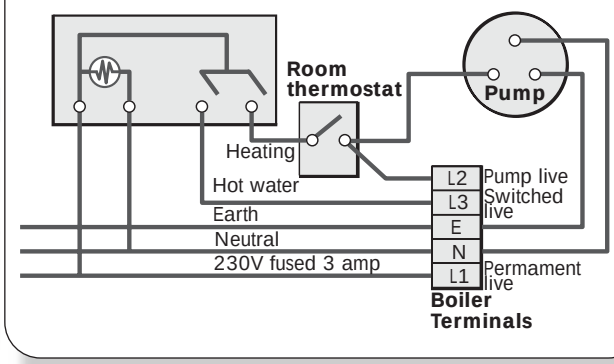

5 COMMISSIONING AND TESTING

Checks to ensure electrical safety should be carried out by a competent person.

The whole of the gas installation should be inspected, checked for soundness and purged in accordance with the recommendations of BS 6891.

Before carrying out the following procedures ensure that the main inner seal casing panel is correctly fitted.

5.1 OPEN VENTED WATER SYSTEMS

a) Fill and flush the system with all valves open. Refill the system and check for water leakage. Vent the system including all radiators and ensure the pump isolating valves, the bypass and motorised valves (if fitted) are fully open.

b) Turn on the gas supply at the appliance service isolation valve.

c) Slacken the burner pressure test point screw and connect a suitable test pressure gauge. (see fig 27).

27 GAS VALVE

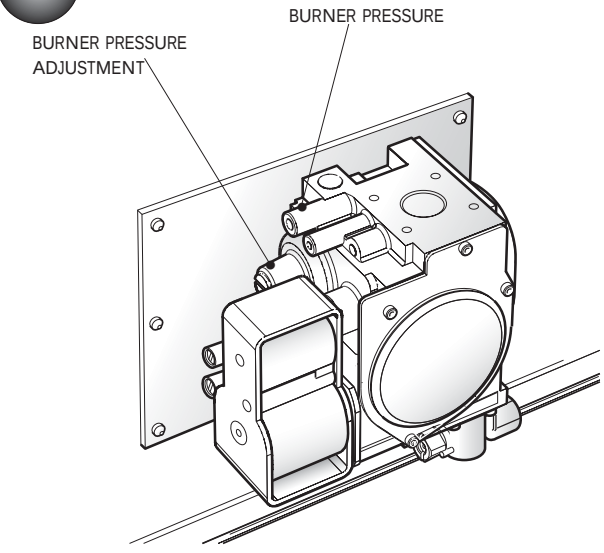

d) Ensure that all external controls (e.g timer, room thermostat and cylinder thermostat where fitted) are turned to maximum.

e) Turn on the electrical supply and check the pump is working and water is circulating through the system.

f) Turn the appliance control thermostat device fully clockwise to the maximum setting. After a maximum of 10 seconds the appliance should light. This is indicated by illumination of the burner 'on' neon (see fig 28).

g) If the burner fails to light turn the boiler thermostat fully anti-clockwise to the reset position and repeat (f).

h) Allow the appliance to operate for 10 minutes and check that the burner pressure is in accordance with the performance data detailed in section 2.2. If the burner pressure is incorrect, check that an inlet pressure of between 18 - 25 mbar (7 – 10 in wg) is maintained at the gas meter when all appliances on the system are operating.(For 40P and 60P inlet pressure of 37 mbar)

28 CONTROL BEZEL

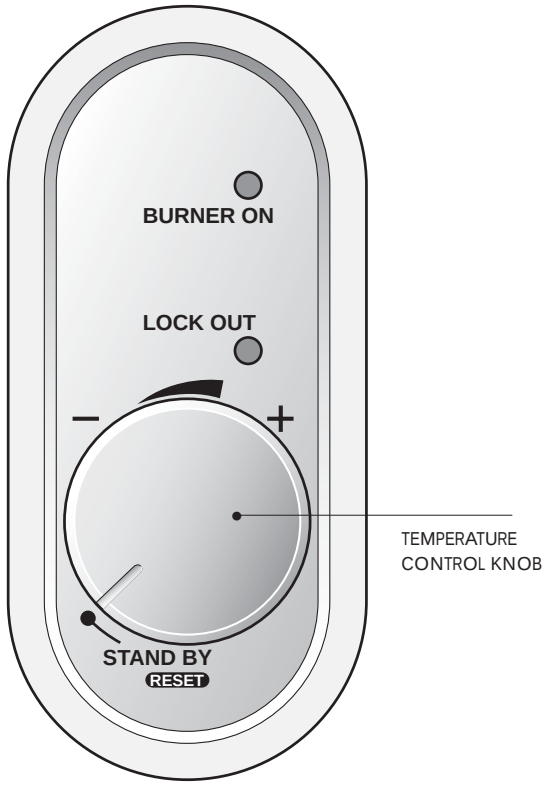

29 CONTROL BOX WITH VARIOUS NEON LIGHTS

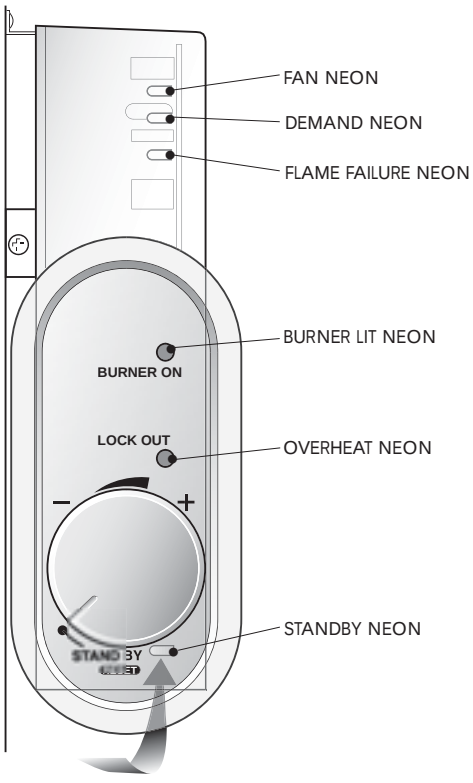

i) Turn off the appliance and remove the test pressure gauge. Tighten the burner pressure test screw and re-light the appliance. Check for leaks around the screw using leak detection fluid.

j) Ensure all external controls (e.g timer, room thermostat etc) are set correctly. The boiler temperature control (Fig 28) can be set between 64°c - 80°c.

k) Balance the system by adjusting the pump speed to obtain the required flowrate (refer to section 3.8).

l) The appliance and the system should be allowed to operate in order to obtain its maximum working temperature whilst examining for water leaks.

m) Turn off the appliance and drain the heating system whilst still hot.

n) Refill and vent to ensure all air is cleared from the system.

o) Refit the right hand side inner casing panel and secure using the two screws.

p) Fit the appliance hinged front panel (if appropriate, Fig 30) and adjust the appliance control bezel and all external controls to the desired settings.

Note: If hinged front panel is not used it is required to block the four hing fixing points using the screws provided.

30 **FIT HINGED FRONT PANEL**

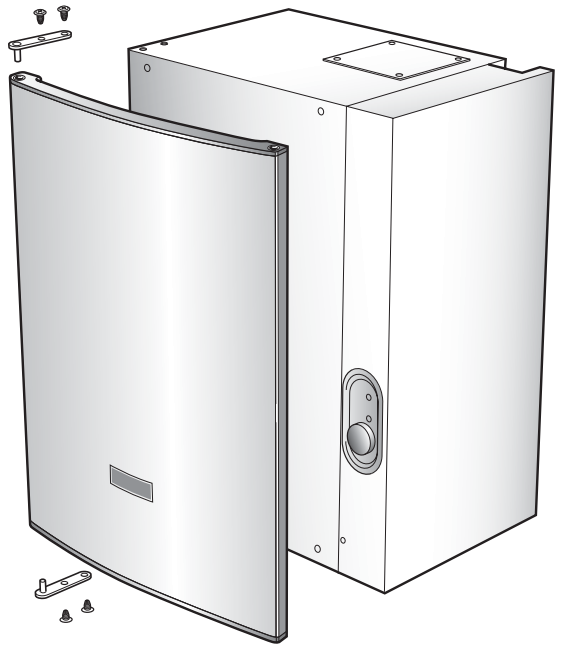

5.2 SEALED WATER SYSTEMS

a) The whole of the system shall be thoroughly flushed with cold water, filled, vented and pressurised to obtain 1.2 bar. Check for leaks.

b) Carry out the procedures detailed in section 5.1 (b) to 5.1 (n).

c) Re-pressurise the system to the desired charge pressure.

d) Continue to perform procedures detailed in section 5.1 (o) and (p).

5.3 USERS INSTRUCTRIONS

Upon completion of commissioning and testing the system, the installer should draw the user's attention to the following.

a) Give the 'Users Instructions' to the householder and emphasise their responsibilities under the 'Gas Safety (Installation and Use) Regulations 1996' (as amended).

a) Explain and demonstrate the lighting and shutdown procedures.

b) Advise the householder on the efficient use of the system, including the use and adjustment of all system controls for both DHW and CH.

c) Advise the user of the precautions necessary to prevent damage to the system, and to the building, in the event of the system remaining inoperative during frost conditions.

d) Explain the function of the boiler overheat thermostat, and how to re-set it. Emphasise that if cut-out persists, the boiler should be turned off and the installer or service engineer consulted.

e) Stress the importance of an annual service by a registered heating engineer.

f) The electrical mains supply to the appliance must remain ON and the Main Switch must left either in the Hot Water or Heating & Water mode for the frost protection circuit to operate.

5.4 BOILER LOGBOOK

A logbook is supplied with this appliance to record installation and commissioning details and make future servicing of the appliance easier.

This logbook forms part of the industry's Benchmark code of practice for the installation, commissioning and servicing of central heating systems.

Please ensure that the logbook is fully completed and left with the customer for future reference along with Users Instructions and this Installation and Servicing Instruction manual.

6 ROUTINE SERVICING

To ensure the continued efficient operation of the appliance, it is highly recommended that regular servicing is carried out. As a general guide a service on an annual basis should be adequate.

It is law that any service work must be carried out by a competent person such as a CORGI registered engineer.

6.1 CHECKING THE OPERATION OF THE APPLIANCE

If the service engineer has suitable equipment for analysing flue gas products it is possible to check the current operation of the appliance prior to the service.

The appliance incorporates a flue gas sampling point on the air pressure switch sensing tube, located at the top right hand side of the appliance (Fig 31).

a) Open the hinged front door (if fitted) and remove the 2 screws securing the right hand side casing panel. Slide forwards to disengage.

b) Remove the plastic cap from the lower sensing tube 'T'-piece (negative side of the switch) and connect a suitable sensing tube from the analyser. Check CO_2 value and compare with figure stated in section 2.4.

c) Replace the plastic cap after use.

31 SENSING TUBES

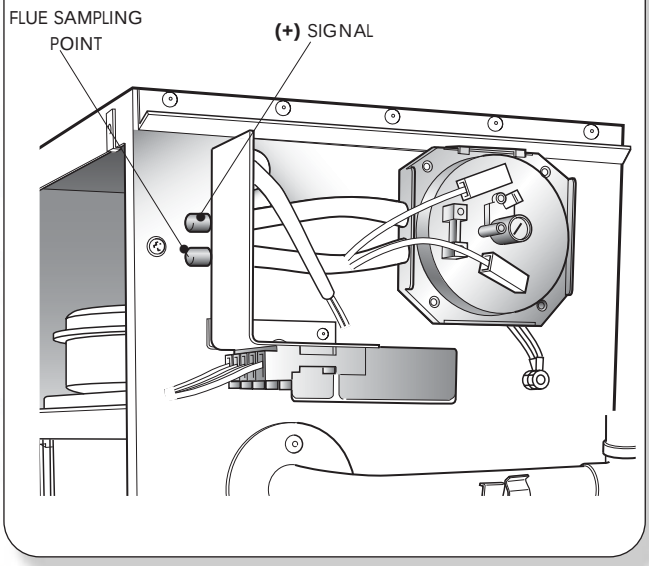

6.2 COMMENCING WITH SERVICING

a) Isolate the mains electrical supply.

b) If fitted, remove the hinged front door from the appliance by removing the 2 screws from each hinge (Fig 30).

c) Remove the 2 screws securing the right hand side casing panel and slide forwards to disengage.

d) Isolate the gas supply at the isolation valve situated at the bottom right hand side of the appliance.

e) Remove the 4 screws securing the left hand side casing panel and slide forwards to disengage.

f) Service the appliance by following the procedure detailed below:

6.3 FAN ASSEMBLY

a) Disconnect the two electrical wires from the fan motor.

b) Disconnect the air pressure switch sensing tubes from the fan noting that the tube furthest from the fan outlet is connected to the positive (+) side of the air pressure switch. (Fig 32)

c) If a rear outlet flue is fitted simply withdraw the fan assembly from the appliance and remove the fan outlet to flue connector. (Fig 12)

d) If a top outlet is used, remove the screw securing the fan outlet elbow and disengage the elbow whilst withdrawing the fan assembly from the appliance. (Fig 32)

e) Inspect the fan assembly (especially the impeller and the flow sensing venturi in the outlet) for dirt, damage or signs of wear. If necessary clean the components using a soft brush or vacuum cleaner. Spin the impeller and check for free rotation without noise and without imbalance. If there are any signs of damage, replace the fan in accordance with section 7.5.

32 REMOVE ELBOW ADAPTOR

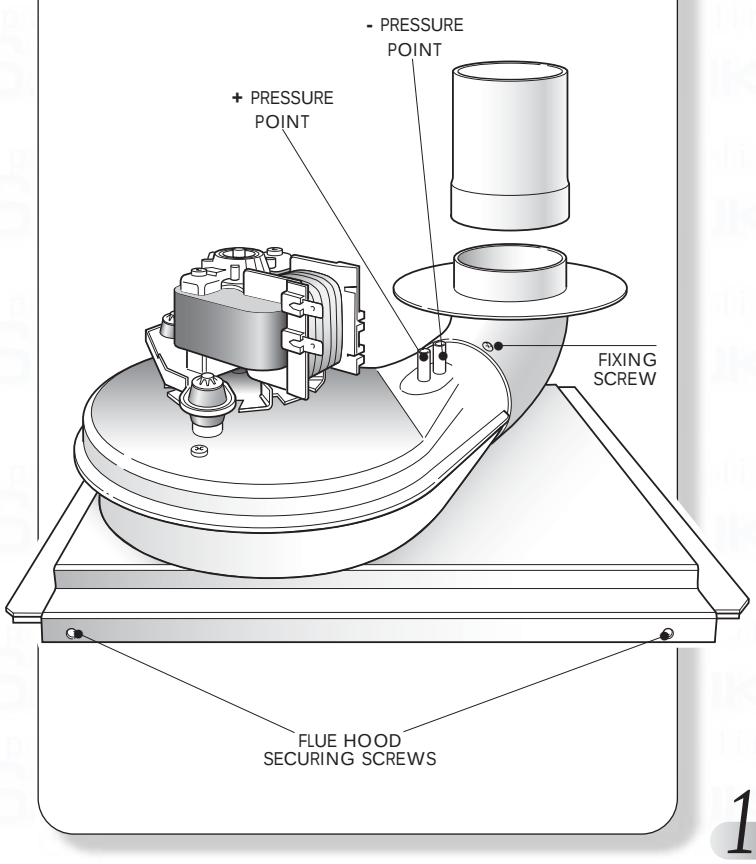

6.4 MAIN BURNER ASSEMBLY & COMBUSTION CHAMBER INSULATION

a) Remove the four screws and two wing nuts securing the combustion chamber front panel.

b) Carefully withdraw the combustion chamber front panel and check the condition of the front insulation material. Replace the insulating material if there are any signs of damage, cracking or deterioration.

c) Withdraw the burner assembly cradle from the appliance and detach the ignition and earth connections. See Fig 36

d) Check the condition of the two side insulation panels located in the cradle. Also check the condition of the rear-insulating panel. Replace insulating panels where necessary.

e) Inspect the burner assembly and check that all ports are clear from obstruction. If necessary clean using a soft brush or vacuum cleaner. **Under no circumstances shall a wire brush or any other abrasive materials be used for cleaning the burner.**

6.5 IGNITION AND DETECTION ELECTRODE INSULATION

a) With the burner assembly removed from the appliance check the condition of the ignition / detection electrode.

b) If there are any signs of damage (i.e. ceramic cracking) replace the electrode in accordance with section 7.9.

c) Check that the electrode is correctly positioned in relation to the burner. See Fig 37

d) Check that both ignition and earth wires are intact and fit correctly onto the tabs.

6.6 INJECTOR

a) With the main burner assembly removed from the appliance, check that the injector is clean and free from dirt and debris.

b) If necessary clean the orifice using a soft brush or vacuum cleaner. **Under no circumstances shall a wire brush or any other abrasive materials be used for cleaning the burner.**

c) It should not be necessary to remove the injector unless there is evidence of debris within the orifice.

6.7 AIR PRESSURE SWITCH TUBES

a) Check the condition of the air pressure switch pipes and all connections are sound. Ensure both 'T'-pieces are fitted with the appropriate sealing caps.

b) Replace any damaged tube using only genuine spare parts from the manufacturer.

c) Check that all tubes are free from blockage.

6.8 HEAT EXCHANGER

a) Carefully remove the heat exchanger flue way baffles and check for signs of damage or deterioration. Replace if necessary.

b) Inspect the heat exchanger from both above and below (use of a mirror could be an advantage) and brush out any debris between the fins using a suitable brush.

c) Check for any signs of water leakage at both ends of the heat exchanger.

6.9 RE-ASSEMBLY

a) Before re-assembly clean out any debris from the inside of the sealed chamber using a soft brush or (preferably) a vacuum cleaner.

b) Re-assemble all components in reverse order with the exception of the right hand side-casing panel, which should not be replaced until after the re-commissioning procedure.

c) Check all joints and seals are correctly fitted and in good condition.

d) Ensure correct location of the burner assembly cradle on the top runners and tie rods (refer to Fig 36) and push firmly to the rear of the appliance ensuring correct engagement of the insulating panels.

e) Ensure the fan assembly engages correctly in the rear locating slots and the flue duct.

f) Ensure air pressure tubes are replaced correctly. Note that fan wire polarity is immaterial.

g) Check the condition of the outer casing panel seal(s) and replace if necessary.

6.10 RE-COMMISSIONING

a) Slacken the burner pressure test point screw on the gas valve (Fig 28) and connect a suitable pressure gauge.

b) Turn on the gas supply at the isolation valve and turn on the electricity supply.

c) Carry out the procedures detailed in section 5.1 (d) to (j) inclusive.

d) Refit the right hand side casing panel and secure with the two screws.

e) Refit the appliance hinged front door panel (if applicable) and adjust the appliance control bezel to the desired setting.

7 REPLACEMENT OF PARTS

Before commencing any replacement operation, ISOLATE the mains electrical supply.

Open the hinged front door panel to expose the two inner casing panels.

Undo the two screws securing the right hand side inner casing panel and pull forwards to remove.

TURN OFF THE GAS SUPPLY AT THE MAIN SERVICE COCK.

Following the completion of any replacement operation, the appliance shall be commissioned in accordance with Section 5 of these instructions.

7.1 OVERHEAT CUT OFF DEVICE

a) Disconnect the two electrical connections at the device.

b) Unclip the device from the upper flow pipe.

c) Remove device from pipe clip to replace.

d) Clip onto the flow (upper) pipe ensuring good contact of device.

e) Reconnect the electrical wires (polarity is not important) and re-assemble appliance in reverse order.

7.2 FLOW TEMPERATURE SENSING DEVICE

a) Disconnect the twin wire plug from the device.

b) Unclip the device from the flow (upper) pipe.

c) Replace the device and re-clip to the flow upper pipe ensuring good contact.

d) Replace the twin wire plug and re-assemble appliance in reverse order.

33 **BOILER SIDE**

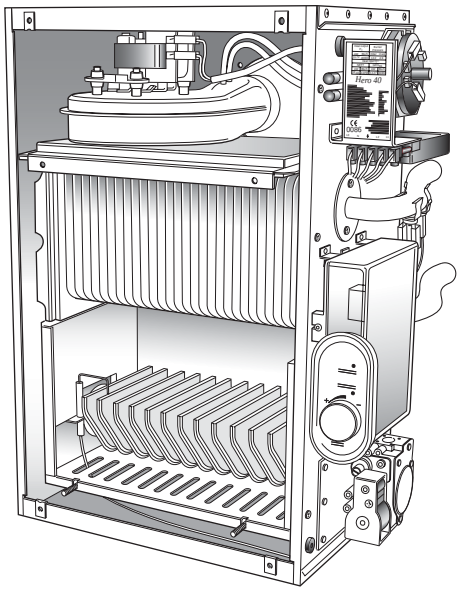

7.3 AIR PRESSURE SWITCH

a) Disconnect the 3 electrical connections from the switch.

b) Disconnect the sensing tubes from the switch.

c) Unclip the air pressure switch from the mounting bracket by pulling the bottom of the switch away from the boiler body.

Replace the switch and refer to Fig 34 and section 8 (wiring diagram).

d) Reconnect the sensing tubes. The upper most tube being connected to the positive (+) side of the switch.

e) Reconnect the electrical wires to the correct terminal on the switch.

Red	=	1	=	N/C
Yellow	=	2	=	N/O
Grey	=	3	=	Common

f) Re-assemble appliance in reverse order.

34 **SENSING TUBES**

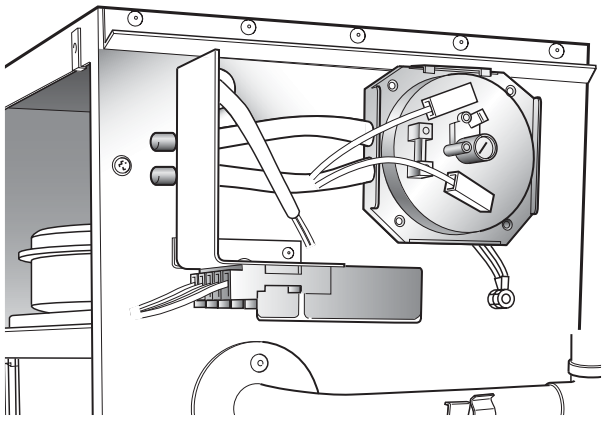

7.4 ELECTRONIC DIAGNOSTIC AND IGNITION SEQUENCE CONTROL BOARD

a) Remove the single screw securing the control box to the appliance and pull forwards to disengage.

b) Disconnect the ignition lead, the earth and the four wiring harness plugs from the board.

c) Unclip the control panel and remove the control device from the box.

d) Replace the control box and re-assemble in reverse order.

Note ~ For all other component replacement detailed in sections 7.4 to 7.10, remove the main inner casing panel secured by the four screws. Pull forward to disengage.

7.5 FAN ASSEMBLY

a) See note after section 7.4.
b) Disconnect the live and neutral wires from the fan motor.
c) Disconnect the air pressure switch sensing tubes from the fan noting that the tube furthest from the fan outlet is connected to the positive (+) side of the air pressure switch. (Refer to Fig 12)
d) If a rear outlet flue is fitted simply withdraw the fan assembly from the appliance and remove the fan outlet to flue connector.
e) If a top outlet is used, remove the screw securing the fan outlet elbow and disengage the elbow whilst withdrawing the fan assembly from the appliance. (Refer to Fig 32)
f) Remove the fan from the fan plate (4 screws).
g) Replace the fan and re-assemble the appliance in reverse order ensuring correct orientation of the fan, correct engaging of fan plate assembly into the rear locating slots and correct sensing tube positions (see point c).

7.6 MAIN BURNER

a) See note after section 7.4.
b) Remove the four screws and two wing nuts securing the combustion chamber front panel.
c) Lift slightly the fan plate assemble and withdraw the panel.
d) Withdraw the burner assembly cradle from the appliance and detach the ignition lead and earth connection.
e) Carefully remove the insulation board from the cradle.
f) Remove the two M3 allen screws at the injector end and the nut at the opposite end of the burner and remove burner from cradle.

35 **BURNER REMOVAL**

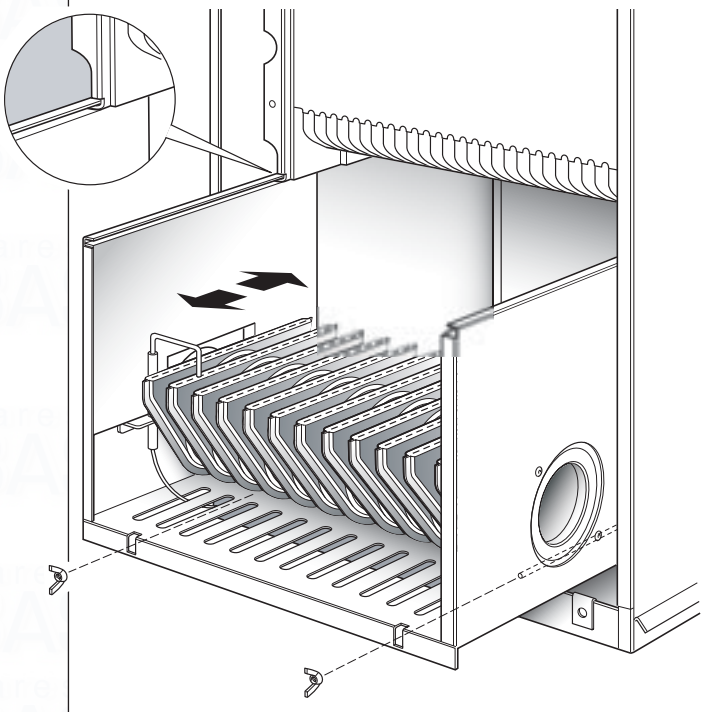

g) Replace the burner and re-assemble appliance in reverse order. Ensure that the burner cradle assembly is correctly located on the top runners and the tie rods. (Refer to Fig 35 Showing burner location on the runners and tie rods) Push firmly to the rear of the appliance and ensure correct engagement of the insulation panels.

7.7 INJECTOR

a) Carry out the procedures detailed in section 7.6 a) to d) inclusive.
b) Remove the injector and replace. Re-assemble appliance in reverse order taking note of point g) of section 7.6.

7.8 GAS VALVE

a) Carry out the procedures detailed in section 7.6 a) to d) inclusive.
b) Remove the 4, M3 allen screws which retain the gas service isolation device to the gas valve.
c) Pull off the 4 wire plug from the gas valve.
d) From inside the boiler, remove the 3 x M3 allen screws which retain the valve to the appliance and remove valve.
e) Replace the gas valve checking that the inlet and outlet 'O' ring seals of the valve are in good condition. (Replace if necessary)
f) Re-assemble the appliance in reverse order taking note of point g) of section 7.6.

7.9 IGNITION / FLAME SENSING ELECTRODE

a) Carry out the procedures detailed in section 7.6 points a) to d) inclusive.
b) Remove the two screws which retain the electrode bracket to the burner cradle.
c) Replace the electrode checking that the alignment and spark gap is correct (Refer to Fig 36 Showing the correct position of the electrode & the dimension of spark gap).
d) Re-assemble the appliance in reverse order taking note of point g) of section 7.6.

36 **ELECTRODE ALIGNMENT**

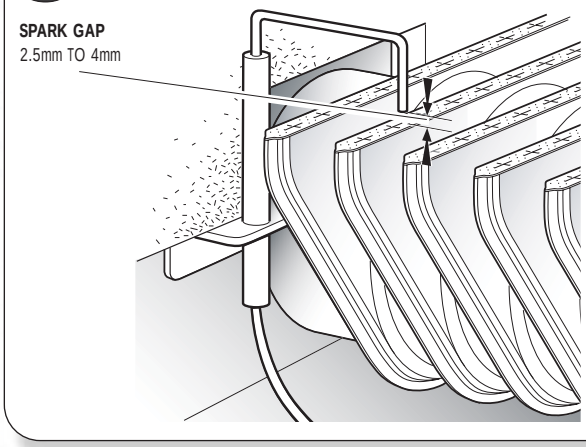

7.10 COMBUSTION CHAMBER INSULATION

The design of the appliance is such that the combustion chamber insulation should not require replacement unless mechanically damaged. It is recommended that a protective mask is worn when changing or handling insulation material.

7.10.1 FRONT PANEL INSULATION

a) Carry out procedures detailed in section 7.6 points a) to c) inclusive.

b) Remove the insulation panel from the combustion chamber front panel and replace, ensuring location behind the bottom holding tab.

c) Re-assemble the appliance in reverse order.

7.10.2 SIDE PANEL INSULATION

a) Carry out procedures detailed in section 7.6 points a) to e) inclusive.

b) Replace the insulation panel (s) and re-assemble the appliance in reverse order taking note of point g) of section 7.6.

8 INTERNAL WIRING DIAGRAMS

37

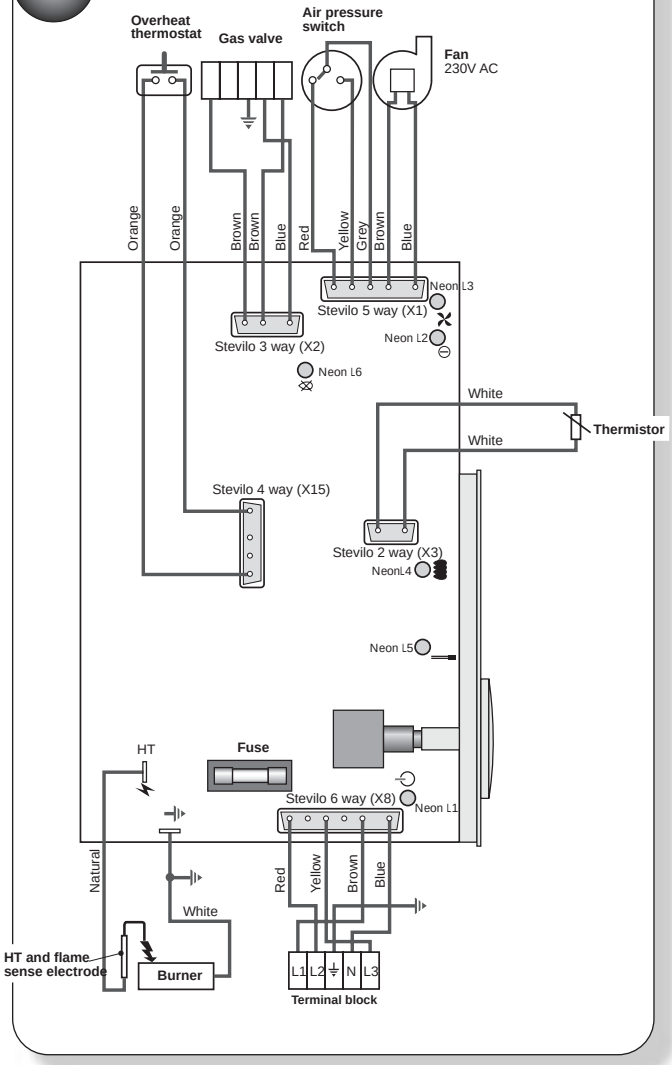

38

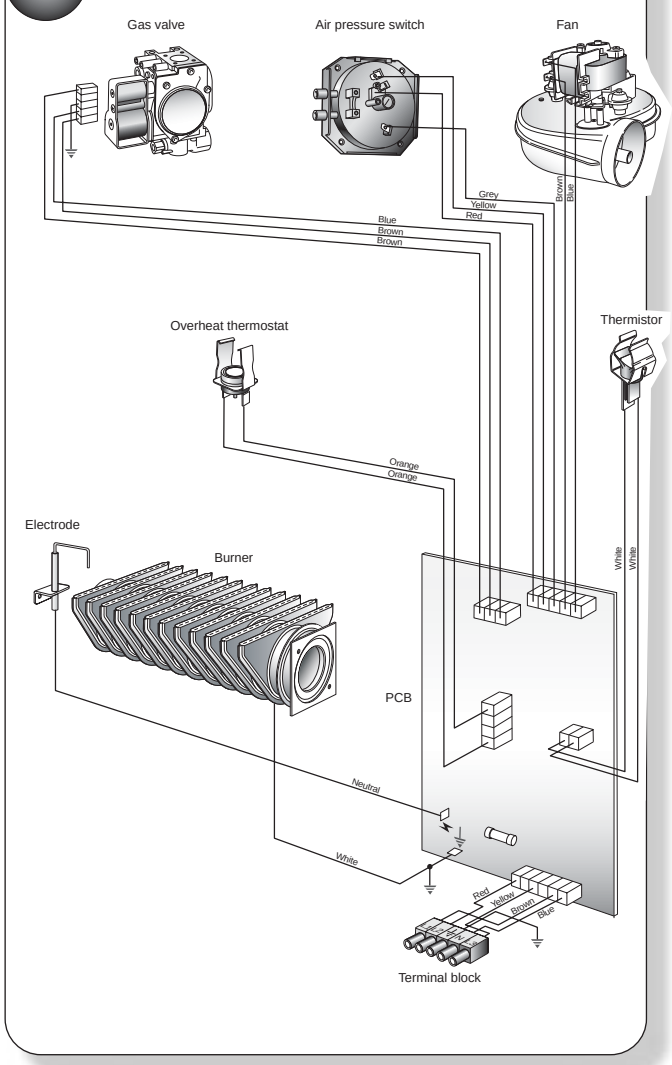

9 FAULT FINDING

Before proceeding through this fault finding, ensure all connections to the electronic circuit board and the mains supply plug (Refer to Section 4.6) are correctly fitted.

Carry out preliminary electrical safety checks in accordance with 'Regulations for Electrical Installations'.

a) Position the temperature control to STANDBY.

b) Turn ON external gas and electricity supplies.

c) Ensure there is 230V at the permanent live 'L1' on the installation terminal block.

d) Ensure there is 230V at the switched live 'L3' on the installation terminal. This is the feed from the external controls, they should be set to ON or MAXIMUM. A link between terminals 'L1' and 'L3' will simulate the external controls being ON.

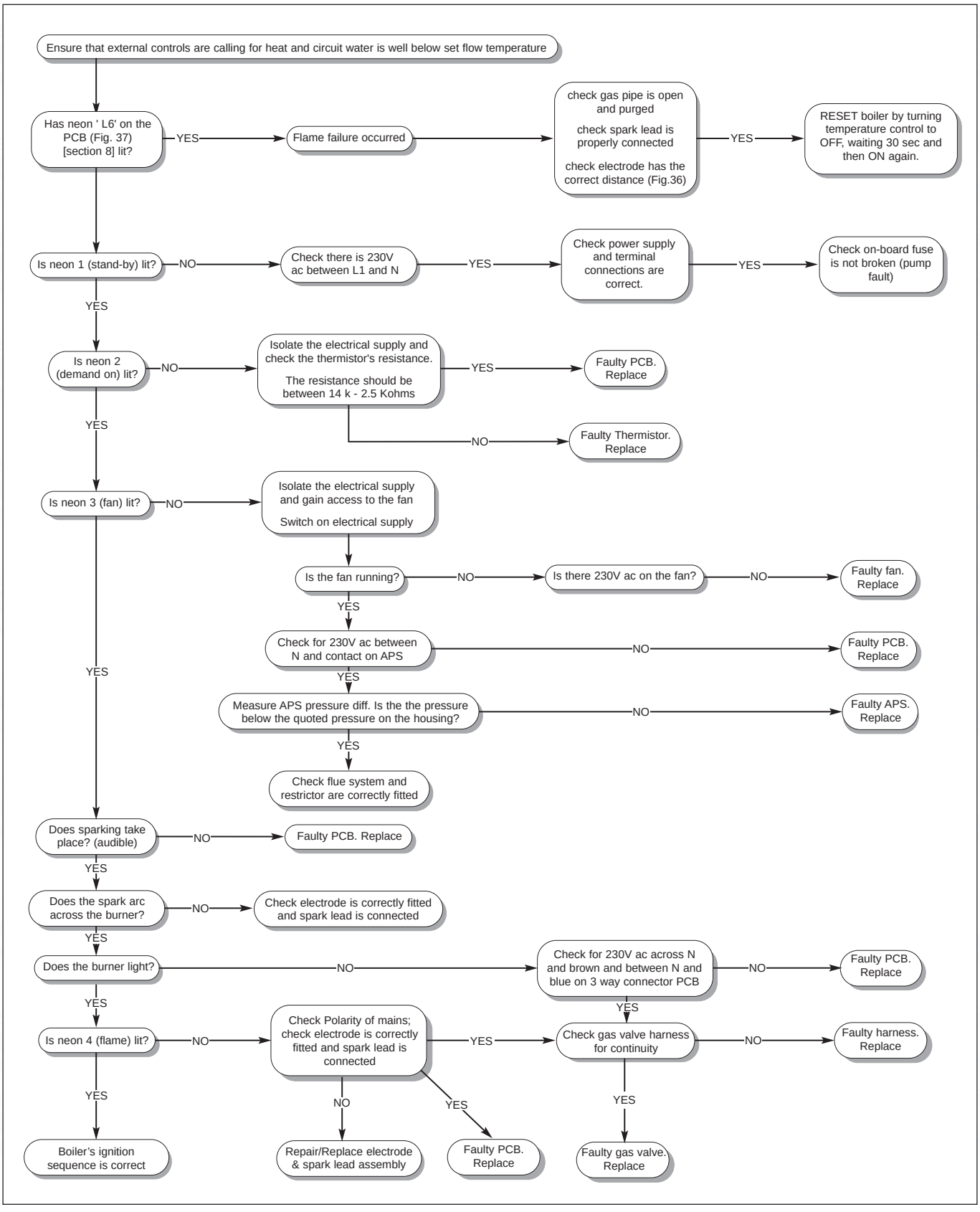

10 SHORT PARTS LIST

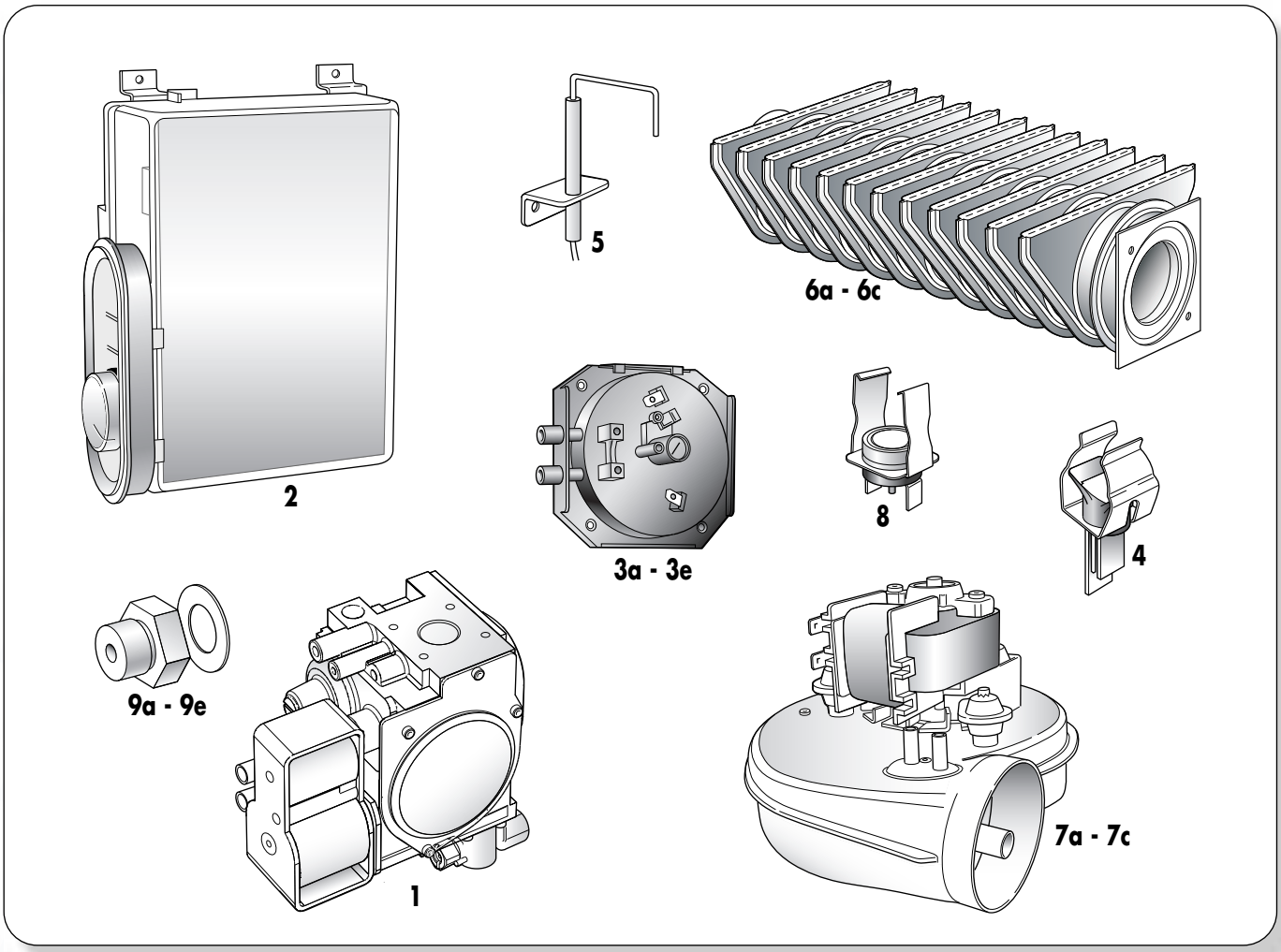

Key	G C Part No.	Description	Boiler	No off	Makers Pt No.
1	E96-047	SIGMA GAS VALVE		1	500623
2	E96-048	ANALOG PCB assy (incl. cover, knob and bezel)		1	988442
3a	E96-049	AIR PRESSURE SWITCH 40/75		1	500625
3b	E96-050	AIR PRESSURE SWITCH 60/60P		1	500631
3c	E96-051	AIR PRESSURE SWITCH 30/50		1	500627
3d	E96-052	AIR PRESSURE SWITCH 90		1	500628
3e	E96-053	AIR PRESSURE SWITCH 40P		1	500629
4	E96-054	THERMISTOR		1	500626
5	E96-055	ELECTRODE		1	500630
6a	E96-056	BURNER 30/40		1	700580
6b	E96-057	BURNER 50/60		1	700581
6c	E96-058	BURNER 75/90		1	700582
7a	E96-059	FAN - HERO 50/60		1	601009
7b	E96-060	FAN - HERO 30/40		1	601010
7c	E96-061	FAN - HERO 75/90		1	601011
8	E96-062	CLIP ON OVERHEAT STAT		1	550527
9a	E96-063	INJECTOR HERO 30/40		1	700590
9b	E96-064	INJECTOR HERO 50		1	700592
9c	E96-065	INJECTOR HERO 60		1	700593
9d	E96-066	INJECTOR HERO 75		1	700594
9e	E96-067	INJECTOR HERO 90		1	700595

The code of practice for the installation, commissioning & servicing of central heating systems

HALSTEAD

British Made Boilers

Halstead Boilers Limited, 20/22 First Avenue, Bluebridge Industrial Estate, Halstead, Essex C09 2EX
Tel: 01787 272800. Sales Direct Line: 01787 475557. Fax: 01787 474588.
e - mail: sales@halsteadboilers.co.uk or service@halsteadboilers.co.uk or training@halsteadboilers.co.uk
Website: www.halsteadboilers.co.uk

SERVICE HELPLINE 01926 834834 **TRAINING INFORMATION 01926 834838**

HB 0203-750953

Halstead Boilers are continuously improving their products and therefore reserve the right to change specifications without prior notice and accept no liability for any error or omission in the information contained in this document.