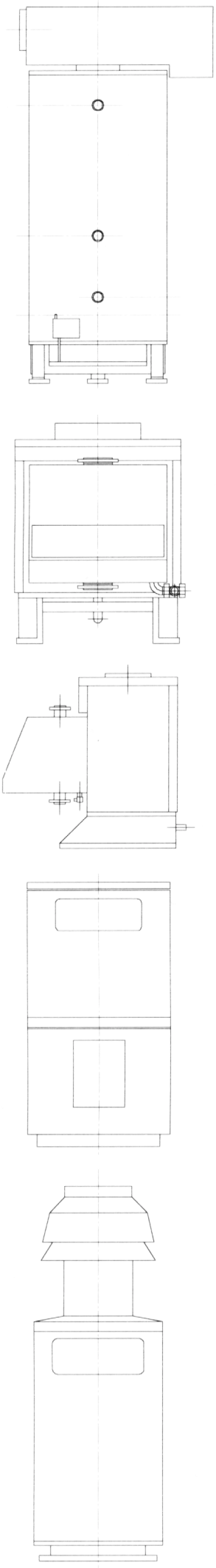

Installation, Commissioning and Servicing Instructions

Atmospheric Cast Iron Boiler 40kW to 120kW Output

PERMANENT IGNITION CONTROLS

Standard Draught Diverter
or
Low Line Draught Diverter

Purewell

Gas Fired
Modular Boiler Systems

NATURAL GAS	I_{2H}
LPG-PROPANE	I_{3P}

IMPORTANT NOTE

THESE INSTRUCTIONS MUST BE READ AND UNDERSTOOD BEFORE INSTALLING, COMMISSIONING, OPERATING OR SERVICING EQUIPMENT.

BSI REGISTERED FIRM
BS EN ISO 9001:1994
Certificate No. FM 10082

CE

HAMWORTHY
heating products

Customer Services

TECHNICAL ENQUIRIES ☎ 01202 662527 / 662528

To supplement the detailed technical brochures, technical advice on the application and use of products in the Hamworthy Heating range is available from our technical team in Poole and our accredited agents.

SITE ASSEMBLY ☎ 01202 662555

Specialist teams are available for on site assembly of the full range of Hamworthy boilers (excluding Lulworth). Boiler sections for site assembly must be positioned within the boiler house prior to the arrival of the assembly team and provide sufficient space for safe working. Handling sections into boiler houses other than at ground level may be subject to additional charges.

The normal assembly price does not include for the fitting of boiler casings or the burner, however this can be carried out at the time of build at additional cost.

Providing the facilities are available on site, a hydraulic test will be carried out within the terms of BS779. Upon completion a certificate of assembly and test will be issued.

COMMISSIONING ☎ 01202 662555

Commissioning of equipment by Hamworthy Heating's own engineers, accredited agents or specialist sub-contractors will ensure that the equipment is operating safely and efficiently. Hamworthy commissioning reports provide a detailed record of the original status of the plant, which is essential for future routine maintenance and trouble free operation.

Standard warranty terms provide for the free of charge replacement of defective parts, but does not include labour. When the equipment is commissioned and routinely maintained by Hamworthy Heating under a Service Maintenance Agreement then the warranty terms will cover both parts and labour.

MAINTENANCE AGREEMENTS ☎ 01202 662555

Regular routine servicing by Hamworthy Heating's engineers ensures trouble free operation and optimum efficiency. The frequency of visits required is variable, dependent upon the equipment type and usage. Annual service agreements are available on all Hamworthy products to meet individual requirements.

Planned maintenance of equipment by routine servicing reduces operational costs considerably below that associated with repair or breakdown approach.

BREAKDOWN SERVICE, REPAIR, REPLACEMENT ☎ 01202 662555

Even when the commissioning and routine servicing has been carried out to the highest standard there are always occasions when the unexpected breakdowns occur. Hamworthy provide a rapid response breakdown, repair or replacement service through head office at Poole and accredited agents located throughout the UK.

SPARE PARTS ☎ 01202 662525

A comprehensive spare parts service is operated from our factory in Poole, providing replacement parts for both current and discontinued products. In some instances spares may be available from accredited agents.

Delivery of parts and components is normally from stock within 7 days. However, a 24 hour delivery service is available for breakdowns and emergencies for the additional cost of the courier. Please contact our spares team, providing details of product type, serial number, model or any other identifying marks or codes to determine part requirements wherever possible.

PUREWELL ATMOSPHERIC HOT WATER BOILER FOR HEATING AND DOMESTIC HOT WATER INSTALLATIONS

INSTALLATION, COMMISSIONING AND SERVICING INSTRUCTIONS

PERMANENT IGNITION CONTROLS (ECO CONTROL)

PERMANENT IGNITION CONTROLS (PILOTSTAT CONTROL- NATURAL GAS ONLY)

WITH STANDARD DRAUGHT DIVERTER (D/D)
40,50,60,70,80,95,105 & 120 kW models

OR WITH LOW LINE DRAUGHT DIVERTER (L/L)
40,70 & 100 kW models

NOTE: THESE INSTRUCTIONS SHOULD BE READ AND UNDERSTOOD BEFORE ATTEMPTING TO INSTALL, COMMISSION OR OPERATE THIS UNIT

THE PUREWELL BOILER IS INTENDED FOR USE AS A COMMERCIAL APPLIANCE AND IS NOT CERTIFIED FOR USE IN HABITABLE AREAS.

THIS BOILER IS FOR USE ON GROUP H NATURAL GAS (2ND FAMILY)I_{2H} OR LPG-PROPANE (3RD FAMILY)I_{3P}. PLEASE ENSURE RELEVANT INFORMATION REQUIRED WITHIN DOCUMENT IS FOUND RELATING TO SPECIFIC GAS TO BE FIRED BEFORE FIRING BOILER.

THIS BOILER COMPLIES WITH ALL RELEVANT EUROPEAN DIRECTIVES.
EC TYPE CERTIFICATE No. BG/EC-87/93/20.
PRODUCT IDENTIFICATION No.87AO20

PUBLICATION NO. 500001045
ISSUE ‘F’
JANUARY 2000

THIS PAGE LEFT INTENTIONALLY BLANK

CONTENTS

	PAGE
INDEX	iii
1.0 INTRODUCTION	1
2.0 TECHNICAL DATA	1
3.0 GENERAL REQUIREMENTS	2
3.1 Related Documents	
3.2 Feed Water Quality	
3.3 Adequate Water Flow	
3.4 Time Clock Control	
3.5 Minimum System Water Pressure	
4.0 LOCATION	4
5.0 GAS SUPPLY.....	4
5.1 Service Pipes	
5.2 Meters	
5.3 Gas Supply Pipes	
5.4 Boosted Supplies	
5.5 Boiler House Control Valve	
5.6 Boiler Gas System Leak Check	
6.0 FLUE SYSTEM	5
6.1 General Requirements	
6.2 Design Waste Gas Volume and Temperature	
6.3 Flue Condensation	
6.4 Materials	
6.5 Disconnection	
6.6 Flue Discharge	
6.7 Surface Temperatures	
6.8 Flue System Location	
7.0 AIR SUPPLY	6
7.1 Air Supply by Natural Ventilation	
7.2 Air Supply by Mechanical Ventilation	
8.0 WATER CIRCULATION SYSTEM	6
8.1 General	
8.2 Pressure Relief Valve (Safety Valve)	
8.3 Open Vent Pipe and Cold Feed Pipe	
8.4 Altitude Gauge (Water Pressure Gauge)	
8.5 Thermometer	
8.6 Drain Valves	
8.7 Circulating Pump	
8.8 Minimum Water Flow Rates	
8.9 Waterside Pressure Drop	
8.10 Control Schemes	
8.11 Unvented Pressurised Systems	
8.12 Modular Boiler Control Schemes	

PAGE

9.0 ELECTRICAL SUPPLY 8

9.1 Site Wiring

10.0 BOILER ASSEMBLY AND INSTALLATION..... 9

10.1 General
10.2 Heat Exchanger Insulation Fitting Instructions
10.3 Gas Pipe Fitting Instructions
10.4 Connection to the Flue System
10.5 Gas Connection
10.6 Water Connections
10.7 Casing and Controls Assembly

11.0 COMMISSIONING AND TESTING 14

11.1 Electrical installation
11.2 Gas installation
11.3 Water circulation system
11.4 Commissioning the Boiler
11.5 Boiler Checks Prior to Lighting
11.6 Gas Pressure adjustment and combustion checks
11.7 Temperature limiter (Limit thermostat)
11.8 Users instructions

12.0 FAULT FINDING..... 16

12.1 Safety Features Summary
12.2 Fault Finding Procedures
12.3 Possible Causes of Boiler Lockout

13.0 SERVICING..... 16

14.0 REPLACEMENT OF FAILED COMPONENTS..... 17

15.0 RECOMMENDED SPARES..... 19

APPENDIX 'A' - INFORMATION RELATING TO PROPANE FIRING..... 32

FIGURES **PAGE**

Figure No. 1 Performance and General Data..... 2
Figure No. 2 Flow Rates/Pressure Drop Table……..... 3
Figure No. 3 Gas Valve Leak Check Procedure..... 5
Figure No. 4 Mechanical Ventilation Flow Rates..... 6
Figure No. 5 Heat Exchanger Insulation Fitting Instructions..... 9/10
Figure No. 6 Gas Pipe Fitting Instructions……..... 10
Figure No. 7 Enclosure Assembly Details..... 12/13
Figure No. 8 Boiler Installation Typical Layout (Vented and Un-vented)…… 20
Figure No. 9 Overall Dimensions of Boiler and Recommended Clearances . 21
Figure No. 10 Front Assembly Showing General Layout..... 22
Figure No. 11 Gas Flow in Pipes.....…….. 23
Figure No. 12 Site Wiring Diagram..... 24
Figure No. 13 Typical boiler wiring diagram (inc. Options)..... 25
Figure No. 14 Pilotstat boiler wiring diagram..... 26
Figure No. 15 Diagram of igniter assembly..... 27
Figure No. 16 Diagram of Various gas valves fitted..... 28
Figure No. 17 Pilotstat valve assembly..... 29
Figure No. 18 General Fault Finding..... 30/31

1.0 INTRODUCTION

1.1 A competent person holding 'CORGI' registration or equivalent must install this boiler. All installations **MUST** conform to the relevant Gas Safety and Building Regulations. Health & Safety requirements must also be taken into account when installing any equipment. Failure to comply with the above may lead to Prosecution.

1.2 These instructions are for Group H Natural Gas (2nd Family) and LPG-Propane (3rd Family). The information relative to propane firing is to be found in Appendix 'A'. Boilers **MUST NOT** use gas other than for which they were designed and made for.

1.3 The Purewell is an Atmospheric, Gas Fired boiler manufactured from horizontal cast iron sections, nippled at alternate ends. These sections are mounted on a fabricated mild steel basket assembly, which houses the burner bar and igniter assemblies. A unique radiant baffle is fitted beneath the burner bars, protecting the floor below by reducing heat lost from the boiler.

The standard version of the Purewell boiler is designed to be connected to the flue via a specifically designed draught diverter. The draught diverter **MUST** be fitted into the spigot on top of the heat exchanger as supplied. **NO** modification or variance is permitted as this may change operational characteristics. Flue outlets from more than one boiler may be connected together to form a header.

Low line versions have an in-built draught diverter and can therefore be connected direct to a header assembly via a suitable flue pipe.

1.4 If the boiler is to be connected to an un-vented (pressurised) heating system, care must be taken to ensure all extra safety requirements are met and that the relevant interlocks will shut down the boiler(s) should a high or low pressure fault occur.

The Pressurisation unit must also incorporate a low level water switch, which protects the water pumps, and will directly or indirectly shut down the boiler plant should a low water condition occur.

Consideration should also be given to the maximum working pressure of the boiler as given in **Section 2:TECHNICAL DATA**. Consult Hamworthy Heating Technical Department for help or assistance if in doubt.

1.5 The Purewell boiler is not suitable for direct connection to domestic hot water supplies or gravity fed heating systems.

1.6 The Purewell boiler can be installed with either reverse return water flow layout or with single pipe header layout. See Figure No. 8 for typical schematic layout.

Hamworthy Heating can supply a pre-designed arrangement of components, which will produce a "reverse-return" assembly. Please contact Hamworthy Heating for information.

1.7 It is good practice in all heating installations to use some form of water treatment to reduce formation of lime scale and black iron oxide sludge. The high efficiencies produced by the Purewell Boiler can easily be reduced by lime scale formation. If a Pressurised unit is used, it is prudent to include an hours run meter to give an indication of pump running time and hence raw water make up. Any leaks should be attended to as soon as possible to avoid calcium salt build up within the boiler's waterways.

2.0 TECHNICAL DATA

2.1 Overall dimensions are shown in Figure No. 9. Both single and multi boiler arrangements are shown.

The Purewell boiler can be installed as a single unit or in modular form where a 'multi' casing reduces required floor area. Each boiler has an independent door for access to the controls and other working components.

It is recommended that a maximum of 6 boilers can be positioned on 533mm (21") centres if required. Larger numbers should be split into two or more banks with 150mm (6") between each bank. **NOTE!** When installing modular units on 533mm (21") centres, the casing support rail or spacing plates should be fitted between each boiler before bolting together. See **Section 10.1:General Installation of Boilers** Ref.: - spacing plates for further information.

2.2 General Information and Technical Data relating to Natural Gas is shown in Figure No. 1. Technical data relating to propane firing can be found in Appendix 'A'.

2.3 Screw threads: All screw threads used in the Purewell boiler conform to the following: -

ISO 7/1 or **ISO 228/1** for pipe threads where applicable.

ISO 262 for all general screw threads.

Figure No. 1 - Performance and General Data information.

GENERAL DATA	40	50	60	70	80	95	100	105	120
Boiler input kW (Gross)	49.3	63.4	74.5	88.4	101	120	126	132	150
Boiler input kW (Nett)	44.4	57.1	67.1	79.6	90.9	108.5	113.6	118.8	135
Boiler output kW	40	50	60	70	80	95	100	105	120
Gas flow rate m^3/h	4.73	5.92	7.1	8.27	9.44	11.19	11.8	12.36	14.1
Gas manifold press mbar	13.4	12.5	11.9	11.0	9.5	11.5	10.2	11.2	11.0
FLUE DATA									
Nominal flue Dia. **D/D**	206	206	206	206	206	256	-	256	256
Nominal flue Dia. **L/L**	206	-	-	206	-	-	256	-	-
Approx. flue gas temp °C	190	200	190	220	230	200	205	215	205
Approx. flue gas vol. @ 9% CO_2 & 100 °C m^3/h	73.8	92.4	110.8	129.1	147.3	174.6	184.1	192.9	220
GAS DATA									
Nominal gas inlet press	20 mbar								
Maximum gas inlet press.	25 mbar								
Injector Dia. mm	2.7	3.1	3.4	3.75	4.2	3.9	4.1	4.1	4.4
Pilot burner	Q349A-1034 (with 56-42A injector)								
No. of Burner bars/Injectors	4					5			
Gas inlet connection.	R¾"					R 1"			
WATER DATA									
Water connections	Flow Rc 2"								Return Rc 2"
Loss mbar @ 15°C ΔT	2.75	4.31	8.63	11.57	14.9	22.55	25	27.45	47.06
Maximum water press.	6 barg								
Water content litres	30	30	37.1	37.1	37.1	44.2	44.2	44.2	51.3
Litres/sec @ 11°C ΔT	0.87	1.08	1.30	1.52	1.74	2.06	2.17	2.28	2.6
Litres/sec @ 15°C ΔT	0.64	0.80	0.95	1.12	1.27	1.51	1.59	1.67	1.91
Litres/sec @ 22°C ΔT	0.43	0.54	0.65	0.76	0.87	1.03	1.08	1.14	1.3
ELECTRICAL DATA									
Normal Supply Voltage	230 V AC 50 Hz 1 ph								
Current Requirements	< 1 Ampere								
Current Requirements (Pump kit fitted)	1.54 amperes (25-80)					0.93 ampere (36-50F)			

* NOTE! Flue gas volumes are based on a gross flue gas temperature of 100∞C at 1013mbar. This is considered to be the predicted temperature of the products in the secondary flue downstream of the draught diverter.

3.0 GENERAL REQUIREMENTS

3.1 Related Documents.

Gas Safety Installations and Use Regulations 1994, (As amended). It is Law that competent persons in accordance with the above regulations install all gas appliances. Failure to install appliances correctly could lead to prosecution. It is in your own interest, and that of safety, to ensure that this law is complied with.

The installation of the boiler **MUST** be in accordance with the relevant requirements of the Gas Safety Regulations, Building Regulations, IEE Regulations and the byelaws of the local water undertaking.

The installation should also be in accordance with any relevant requirements of the local gas region and local authority and the relevant recommendations of the following documents: -

British Standards

BS 7074: Application, selection and installation of expansion vessels and ancillary equipment for sealed water systems. **Part 2:** Code of practice for low and medium temperature hot water systems.

BS 6891: Installation of low-pressure gas pipework of up to 28mm in domestic premises. (For larger installations see **IM/2, IM/5** and **IM/16** below.)

BS 6644: Installation of Gas Fired Hot Water Boilers - 60kW to 2MW.

BS 6700: Design, installation, testing and maintenance of services supplying water for domestic use.

BS 6880: Part 1, 2 & 3: Code of practice for low temperature hot water heating systems of output greater than 45kW.

BS EN 60335, Part 1. Safety of Household & similar electrical appliances. **BS 3456, Part 201:** Electrical Standards.

CP 342: Centralised hot water supply.
Part 2: Buildings other than individual dwellings.

British Gas Publications

IM/2 Purging procedures for non-domestic gas installations.

IM/5 Soundness testing procedures for industrial and commercial gas installations.

IM/11 Flues for commercial and industrial gas fired boilers and air heaters.

IM/16 Guidance notes on the installation of gas pipework. (Excluding domestic installations of 25mm and below.)

Health and Safety Executive: -

Guidance note PM5 - Automatically controlled steam and hot water boilers.

CIBSE Publications: -"CIBSE Guide" It is impractical in this document to specify all relevant information, but the following extracts from the above references are emphasized since failure to comply with these requirements will almost certainly result in an unsatisfactory installation.

3.2 Feed Water Quality

If the boiler feed water has a high degree of hardness, it is recommended that the water be treated to prevent precipitation of scale or sludge in the boiler water passageways. Details of additives can be obtained from any reliable manufacturer of water treatment products or the local water authority. It should be noted however, that even if the boiler water is of average hardness, not requiring treatment, subsequent draining of the system for repair or constant make-up water due to an undetected leak would cause additional deposits and gradual build-up of scale. It is essential therefore, that leaks are attended to promptly and draining is kept to an absolute minimum.

It is recommended that the system be flushed out at least twice with hot water before any water treatment is added. If any doubt exists regarding the internal cleanliness of an old system, consideration should be given to the fitting of a coarse filter in the return pipework to the boilers.

3.3 Adequate Water Flow

The Hamworthy Purewell boiler is designed as a quick response, low water content unit, able to run continuously with maximum reliability. Care should be taken in the initial design and layout having due regard for adequate water flow through the boilers and the influence of the system controls. **NOTE!** The Standards Authority recommend a minimum return temperature of 50°C in all heating systems other than condensing boilers.

Figure No. 2 shows recommended and minimum water flows required. The control system and valves, where fitted, should be regulated to avoid lower flows occurring.

The flow corresponding to 22°C temperature rise across the boiler is the minimum recommended flow at any time. For boiler pressure drop see Figure No. 2.

Figure No. 2 - Flow-rate Pressure Drop Table.

Model	40	50	60	70	80	95	100	105	120
Flow @ 11°C ΔT rise litres/second	0.87	1.08	1.30	1.52	1.74	2.06	2.17	2.28	2.6
Resistance mbar	5.1	7.84	15.69	20.59	26.47	37.25	41.12	50	84.31
Flow @ 15°C ΔT rise litres/second	0.64	0.80	0.95	1.12	1.27	1.51	1.59	1.67	1.91
Resistance mbar	2.75	4.31	8.63	11.57	14.9	22.55	25	27.45	47.06
Flow @ 22°C ΔT rise litres/second	0.43	0.54	0.65	0.76	0.87	1.03	1.08	1.14	1.3
Resistance mbar	1.27	2.06	4.12	5.49	7.06	11.76	12.94	13.23	22.55

3.4 Time Clock Control

In order to avoid local overheating and progressive calcium deposition at zero flow conditions where boilers are operated from time clocks, provision should be made for a 5 minute circulating pump over-run after the last boiler has ceased firing.

NOTE! Time clocks should not interrupt live, neutral or earth connections, see **Section 9.0: ELECTRICAL SUPPLY** for details. See Figure No. 10 for wiring details.

3.5 Minimum System Water Pressure

To comply with guidance note **PM5 (Health and Safety Executive)**, the minimum pressure requirements at the boiler are given below as examples: -

1) Single installed boiler running at 82°C flow temperature. Minimum head required is not less than 2 metres or 0.2 bar.
2) Single installed boiler running at 95°C flow temperature. Minimum head required = 5.1 metres or 0.5 bar.
3) Modular boiler installation running at 82°C flow temperature and 11°C rise across system. Minimum head required = 4.3 metres or 0.42 bar.
4) Modular boiler installation running at 82°C flow temperature and 22°C rise across system. Minimum head required = 10.5 metres or 1.03 bar.

See **Section 8.11** for Pressurised Water Systems.

4.0 LOCATION

4.1 (See Figure No. 9 for dimensions/weights and clearances.) The location chosen for the boiler **MUST** permit the provision of a satisfactory flue system and an adequate air supply. The location must also provide adequate space for servicing and air circulation around each unit. This includes any electrical trunking laid along the floor.

Allow adequate space, this should not normally be less than 460mm at the rear, for flow and return connections. Also allow at least 460mm on one side, the other side must be no less than 150mm. Allow 610mm (minimum) in front of the boiler for servicing.

The boiler must be installed on a level non-combustible surface that is capable of adequately supporting its weight (when filled with water) and any ancillary equipment.

Any combustible material adjacent to the boiler and the flue system must be so placed or shielded to ensure that its temperature does not exceed 65°C.

Further details regarding boiler location are given in **BS 6644**.

5.0 GAS SUPPLY

5.1 Service Pipes

The local gas region must be consulted at the installation planning stage in order to establish the availability of an adequate supply of gas. An existing service pipe must not be used without prior consultation with the local gas region.

5.2 Meters

A new gas meter will be connected to the service pipe by the local gas region, or a local gas region contractor. An existing meter should be checked, preferably by the gas region, to ensure that it is adequate to deal with the rate of gas supply required.

5.3 Gas Supply Pipes

Supply pipes must be fitted in accordance with **BS 6891** or **IM/16** as appropriate. Pipework from the meter to the boiler must be of adequate size. Do not use pipes of a smaller size than the boiler gas connection. The complete installation must be purged and tested for soundness as described in **BS 6891** or **IM/2** and **IM/5** as appropriate.

See Figure No. 11 for recommended gas flows in pipes.

5.4 Boosted Supplies

Where it is necessary to employ a gas pressure booster, the controls must include a low-pressure cut-off switch at the booster inlet. The local gas region must be consulted before a gas pressure booster is fitted.

5.5 Boiler House Control Valve

A manual valve for boiler house isolation shall be fitted in the gas supply line. It shall be clearly identified and readily accessible for operation, preferably by an exit.

5.6 Boiler Gas System Leak Check

Although the boiler receives a gas leak check and gas train component integrity check prior to leaving the factory, transport and installation may cause disturbance to unions, fittings and gas valve assemblies' etc. During commissioning a further test for soundness should be carried out on the boiler gas pipework and components. A procedure guide is shown in Figure No. 3. Care must be taken not to allow leak detection fluid on or near any electrical parts or connections (If used).

See Figure No. 3 Gas valve/pipework leak check test procedure.

TO CHECK VALVE B
1) Turn off the electrical power and gas to the appliance.
2) Connect the manometer to gas valve test point.
3) With A, B closed open C and monitor manometer over a 2 minute period, a rise indicates a leak on valve B.

Figure No. 3 Gas Valve Leak Check Procedure

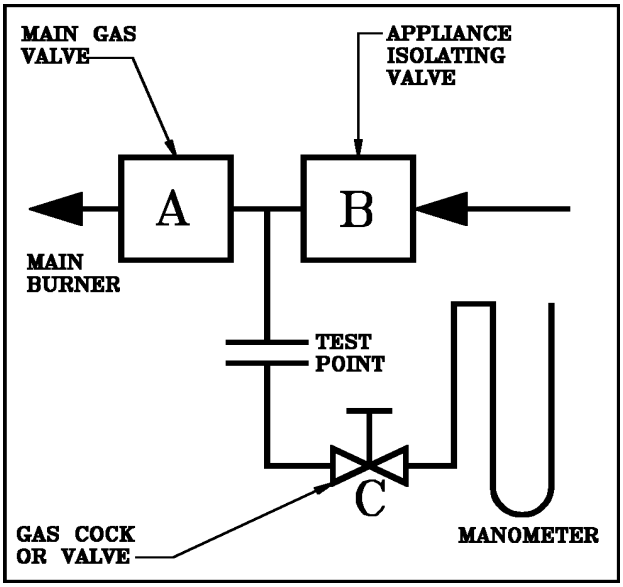

Note: -
Main Gas Supply Pressure: G20 - 20mbar
G31 - 37mbar

TO CHECK VALVE A
1) Open C.
2) Open B to produce the main gas supply pressure between A and B.
3) Close B
4) System may be considered sound if over a period of 2 minutes any drop in pressure is less than 0.5mbar (0.2" wg.).

NOTE: Allow a manometer stabilisation period of approximately 1 minute before each 2 minute check period. Following soundness tests close valve B and remove manometer connections and tighten test points.

6.0 FLUE SYSTEM

Detailed recommendations for flue systems are given in **BS 6644** British Gas Publication, **IM/11** "Flues for Commercial and Industrial Gas-Fired Boilers and Air Heaters".

The following notes are intended to give general guidance only.

6.1 General Requirements

The Hamworthy Purewell Series of boilers are designed to be used with natural draught flues. Flue systems should be designed in accordance with current regulations and with reference to the British Gas publication **IM/11** "Flues for Commercial and Industrial Gas Fired Boilers and Air Heaters". The following points should be noted: -

1) Each boiler **MUST** have its correct draught diverter fitted in an unmodified condition before connection to the flue system.
2) The bottom of the flue header should be at least 500 mm above the draught diverter skirt bottom.
3) The flue system must be self-supporting in the correct position to avoid compression of the draught diverter and enable its removal for boiler cleaning.
4) Boilers should be located as near the chimney as possible the nearest being not more than 2m (6 ft) away.
5) The flue system should be designed to achieve a negative suction at all times at the draught diverter outlet on all modules in a bank. For optimum performance, draught conditions should be between -0.05 to -0.125mbar. In the case of a single boiler installation, the minimum vertical flue height is 2m above the draught diverter skirt. For multiple boiler installations consult Hamworthy Heating Technical Department. In some instances, mechanical assistance may be necessary. The boilers are suitable for connection to a fan diluted flue system, refer to British Gas publication **IM/11** "Flues for Commercial and Industrial Gas Fired Boilers and Air Heaters".
6) Purewell boilers are suitable for installation in a balanced compartment in accordance with the requirements of **BS 6644**. Consult Hamworthy Heating Technical department for help or assistance if in doubt.

6.2 Design Waste Gas Volume and Temperature

It is recommended that the volume and temperature of the waste gases used for design of the flue system be as shown in Figure No. 1 for Natural Gas. Information relating to propane firing can be found in Appendix 'A'.

6.3 Flue Condensation

Care should be taken to ensure that the flue is installed in such a way that any condensation produced on start up will drain away naturally.

6.4 Materials

Materials used for the flue system must be mechanically robust, resistant to internal and external corrosion, non-combustible and durable under the conditions to which they are likely to be subjected.

6.5 Disconnection

Draught diverter models have been designed to enable the primary flue to be lifted clear of the boiler to ease disconnection. The flue must be correctly reconnected when servicing is complete ensuring locating bolts are securely fitted. See **Section 13: SERVICING** for further information.

6.6 Flue Discharge

The flue system must ensure safe and efficient operation of the boiler to which it is attached, protect the combustion process from wind effects and disperse the products of combustion to the external air.

The flue must terminate in a freely exposed position and be so situated as to prevent the products of combustion entering any opening in a building.

Where the flue diameter is less than 200mm (8") a terminal must be fitted. Where the flue is of a larger size consideration should be given to the fitting of a flue discharge terminal or grill to stop ingress of birds, etc.

6.7 Surface Temperatures

Combustible materials in the vicinity of the boiler and flue shall not exceed 65°C during boiler operation. The flue shall not be closer than 50mm to any combustible material, except where it passes through such material with a non-combustible sleeve when the air gap may not be less than 25mm.

6.8 Flue System Location

The flue system must not be placed or fitted where there is undue risk of accidental damage to the flue pipe or undue danger to persons in the vicinity. **NOTE!** The flue **MUST** be self-supporting. Check that the flue and chimney are clear from any obstruction.

7.0 AIR SUPPLY

Detailed recommendations for air supply are given in **BS 6644**. The following notes are intended to give general guidance. In all cases there must be provision for an adequate supply of air for both combustion and general ventilation, in addition to that required for any other appliance.

7.1 Air Supply by Natural Ventilation

The boiler room must have, or be provided with, permanent air vents directly to the outside air, at high level and at low level. For an exposed boiler house, air vents should be fitted preferably on all four sides, but at least on two sides. Air vents should have negligible resistance and must not be sited in any position where they are likely to be easily blocked or flooded or in any position adjacent to an extraction system which is carrying flammable vapour. Grilles or louvres must be so designed that high velocity air streams do not occur within the space housing the boiler.

The air supplied for boiler house ventilation shall be such that the maximum temperatures within the boiler house shall be as follows:

1) At floor level (or 100mm above) = 25°C.
2) At mid-level (1.5m above floor level) = 32°C.
3) At ceiling level (or 100mm below) = 40°C.

Where both low and high level openings are used, the grilles shall have a total minimum free area of:-
Low Level (inlet): 540cm^2 plus 4.5cm^2 per Kilowatt in excess of 60kW total rated input.
High Level (outlet): 270cm_ plus 2.25cm_ per Kilowatt in excess of 60kW total rated input.

7.2 Air Supply by Mechanical Ventilation

Air supplied to the boiler room by Mechanical means should be as follows: -

1) Mechanical inlet and mechanical extract can be utilised providing design extraction rate does not exceed one third of the design inlet rate.
2) Mechanical extract ventilation with natural inlet ventilation **MUST NOT** be used.

Figure No. 4 - Mechanical Ventilation Flow Rates

Atmospheric Boilers	Flow rate per 1000kW total rated heat input	
	Inlet air (Combustion ventilation)	Extract air (ventilation)
	m ^{3}/s.	m ^{3}/s.
Volume	1.10	0.45

NOTE: For Mechanical ventilation systems an automatic control should be provided to cut off the gas supply to the boiler, in the event of failure of air flow in either inlet or extract fans.

8.0 WATER CIRCULATION SYSTEM

8.1 General

The Purewell Cast Iron Boiler has a low water content and the requirements of minimum water flow are given in **Section 8.8:Minimum Water Flow Rates** and Figure No. 2. Recommendations for the water circulation system are given in **BS 6644** and **CP 342**. The following notes are of particular importance: -

1) In a combined central heating and hot water system, the hot water storage vessel must be of the indirect cylinder or calorifier type. The hot water storage vessel should be insulated preferably with not less than 75mm (3in) thick mineral fibre, or its thermal equivalent.
2) Circulating pipework not forming part of the useful heating surface should be insulated to help prevent heat loss and possible freezing, particularly where pipes are run through roof spaces and ventilated cavities. Cisterns situated in areas, which may be exposed to freezing conditions, should also be insulated. Insulation exposed to the weather should be rendered waterproof.
3) Draining taps must be located in accessible positions, which permit the draining of the whole system, including the boiler and hot water storage vessel.
4) Each boiler has one 2" BSP female flow and one 2" BSP female return tapping. Flow and return headers should connect boilers but sufficient length

of connecting pipe should be allowed to clear the casing before connecting into the headers. The headers should be connected to the system in a "reverse return" arrangement (the water flow in each header is in the same direction) to ensure equal flow in each module. Figure No. 8 shows typical layout.

8.2 Pressure Relief Valve (Safety Valve)

Each boiler, or in the case of a modular installations, each bank of boilers, must be fitted with a pressure relief valve to **BS 759** or **BS 6759 Part 1 (ISO 4126)** and sized as shown in **BS 6644**.

BS 6644 provides comprehensive information for the selection and location of safety valves and attention is drawn to the higher capacity requirements of safety valves for pressurised hot water systems.

8.3 Open Vent and Cold Feed Pipe
(See **BS 6644** for further information.)

Every boiler or group of boilers should have an open vent pipe and cold feed pipe installed between the boiler and the first water isolating valve. The minimum bore (mm) of these pipes per installation is as follows:

Boiler Output	Feed	Vent
< 60kW	19	25
60kW - 150kW	25	32
150kW - 300kW	32	38
300kW - 600kW	38	50

The vent pipe must rise continually, must not be valved except by a design which when closed for maintenance ensures the boiler is open to atmosphere. The pipe shall be protected against freezing where this might occur.

8.4 Altitude Gauge (Water Pressure Gauge)

Every boiler or group of boilers should be provided with a gauge complete with isolating cock. See Figure No. 8 for typical position.

8.5 Thermometer

See Figure No. 8 for typical position.

A thermometer complete with pocket should be fitted in the pipework to indicate water flow temperature.

8.6 Drain Valves

Each boiler should have a ½ in NB drain valve (not H.H.L. supply) fitted to drain the boiler only. The heating system in total should have drain valves as recommended by **BS 6644**. See Figure No. 8 for recommended positions.

8.7 Circulating Pump

One or more circulating pumps will be required to circulate water around the boilers and heating system. Figure No. 1 shows the hydraulic resistance of the boiler. The pump should be sited to facilitate servicing. It is important to note that when Purewell boilers are used to replace boilers on an existing system, the pumps should be checked for performance against the new boiler waterside pressure drop to ensure that the minimum flow rate can be obtained. It is also important that the existing system be flushed through twice to remove any loose matter, which may have accumulated. If in any doubt regarding the cleanliness of the system, a coarse filter should be fitted in the return pipework to the boilers.

8.8 Minimum Water Flow Rates

Minimum water flow rates are shown in Figure No. 2. These flow rates must be maintained through the boiler at all times whilst the boiler is firing. If the flow rate is allowed to fall below the minimum, the boiler heat exchanger could fail due to the resultant scale formation. Particular attention should be paid to the restriction of external flow circuits during periods of low heat demand.

8.9 Waterside Pressure Drop

The waterside hydraulic resistance (Pressure drop) is shown in Figure Nos.1 & 2.

NOTE: If boilers are run off time clock control, a pump overrun (not H.H.L. supply) should be fitted which must run for a minimum of 5 minutes on shut-down of the last boiler.

8.10 Control Schemes

8.10.1 Temperature Controls

An adjustable control thermostat is supplied for each boiler and should be set to operate within the range 65-90°C for standard applications.

If a higher water temperature is required (and providing sufficient head on the water system is available) the thermostat may be adjusted to operate up to 95°C. A temperature limiter, (hand reset limit thermostat) is also fitted to the boiler and is normally set at 100°C. The minimum difference between control thermostat and temperature limiter **MUST NOT** be less than 10°C.

8.10.2 Water Flow Controls

Any external mixing valves or similar controls should always ensure that the minimum water flow rate shown in Figure No. 2 is maintained.

8.10.3 Frost Protection

Consideration should be given to fitting a frost thermostat set at approximately 4°C.

8.11 Unvented Pressurised Systems

See Figure No. 8 for typical layout of a Pressurised (Unvented) Hot Water System.

In order to correctly size a Pressurisation Unit for any Heating System certain parameters are required. These are: -

1) Static height of highest component in system.
2) System volume - if not known a general rule of thumb of 10 litres/kW installed boiler power can be used.
3) Maximum flow temperature, i.e. most systems run at 82°C.
4) Maximum system hot working pressure, generally given in barg.

From the above information Hamworthy Heating can size the pressure unit and also the expansion vessel required.

Care must be taken in sizing expansion vessels to ensure maximum acceptance factors are not exceeded. Normally manufactures of vessels impose a limit of 0.5. This value must not be exceeded at any time during the operation of the boiler: this includes the over pressure condition should a safety valve lift.

Consideration should also be given to sizing of the safety valve(s) in the system. See **BS 6759**: Part 1**(ISO 4126)** for information.

See also **BS 6880**: Part 1 for design considerations.

8.12 Modular Boiler Control Schemes

For Modular applications Hamworthy Heating can supply a unique boiler management control system called the 'Marshall' - see Figure No. 8. This system comprises: a master control unit, which houses the main interface processor and, dependent on the number of boilers, a slave unit for each of the other boilers. Each unit plugs into the previous one by a low voltage signal wire. All the sensors are connected to the last 'slave' by a single cable, which is simple to attach. Both master and slave(s) are incorporated into the controls fascia for ease of application. For further information contact Hamworthy Heating for details.

9.0 ELECTRICAL SUPPLY

WARNING: THIS APPLIANCE MUST BE EARTHED.

Wiring external to the boiler must be installed in accordance with the IEE Regulations and any local regulations, which apply. Wiring must be completed in heat resistant 3-core cable. (Size 1.0mm_ csa). Boilers are normally supplied suitable for 230 volts, 50Hz. Fascia fuse rating is 2A. External fuses should be 6A for all single boiler sizes.

The method of connection to the mains electricity supply must facilitate complete electrical isolation of the single boiler with a contact separation of at least 3mm in all poles.

This appliance must be isolated from the mains electricity supply in the event of electric arc welding being carried out on any connecting pipework.

A mains isolator must be provided adjacent to the boiler in a readily accessible position. The supply should only serve the boiler. **NOTE!** Volt free contact electrical supplies must also be isolated when fitted (See note on fascia). Further details regarding connection to the electricity supply are given in **BS EN 60335, Part 1 or BS 3456, Part 201**.

The power supply should not be switched by a time clock, especially if a single header pump kit is utilised. The Purewell boiler has a remote stop/start loop which can be used to operate the boiler(s) under a timed regime. This remote loop requires a volt free contact for operation. Power is supplied by the boiler for this circuit to function. The voltage will therefore be the same as the boiler's power supply.

Refer to Figure No. 12 for typical site wiring connections. See **BS 6644** for further information.

9.1 Site Wiring

Access to the controls is achieved by rotating the 1/4 turn latch and removing the door. A 20mm dia. knockout is provided in each side panel if required for electrical connections. Any other routing of site cables should ensure that cables do not pass close to the boiler flue hood or that any cable trunking does not interfere with normal air circulation and supply ducts.

A gland plate is supplied with every Purewell boiler having two 20mm dia. holes for electrical cable anchorage. A plug and socket arrangement is utilised for the site terminal connections. Care must be taken to ensure correct connections are made to the relevant terminals before applying power.
Refer to Figure No. 13 for typical wiring diagram of standard Permanent pilot boiler.

10.0 BOILER ASSEMBLY AND INSTALLATION

10.1 General

Each boiler is dispatched to site as follows: -

i) Heat Exchanger & Basket including burners and gas valve(s) etc. on a pallet.
ii) Casing complete with assembly instructions.
iii) Control Assembly with relevant control system.
iv) Primary flue & Draught diverter. (Draught Diverter models only).

Further details of each individual assembly is given below: -

1) Factory tested heat exchanger casting assembly complete, including insulation wrap, gas valve assembly including pre-wired plug assembly. The gas connection pipe should be fitted to the boiler flue hood once the heat exchanger is located. **NOTE!** Care must be taken to ensure no damage occurs to either insulation wrap or gas connecting pipe. **NOTE! THIS PIPE MUST NOT BE USED TO MANOEUVRE OR POSITION THE BOILER.** Consideration must be given to the weight of the boiler (See Figure No. 9), before lifting. It is recommended that the boiler is moved complete with pallet and positioned correctly. The pallet can then be dismantled and the boiler slid into position.
2) Casing including all screws, fasteners, etc. to permit site assembly. Instructions are included in each box to show method of assembly. Two sizes are manufactured these are: - Small casing for boilers up to 80kW (**NOTE!** P70 Low Line model utilises larger casing), large casing for all boilers from 95kW to 120kW.

NOTE! When installing a multi-casing set the spacing plates must be used to correctly space the boilers approx. 3mm apart prior to fitting the casing. (See label attached to the basket fixing.)

It is recommended that all mechanical work is carried out prior to fitting the casing assembly, this will reduce possible damage to the panels.

The casing assembly includes a component list, which is also shown in Figure No. 7. You should check to ensure that all parts are supplied prior to assembly.
3) Controls assembly including fascia panel and thermostats. This assembly will be suited to the desired controls and include any optional extras required. Refer to Figure No. 7 for fitting instructions. Ensure all thermostat capillaries are inserted and correctly located into the top of the boiler. The controls assembly also incorporates a socket which matches the gas valve wiring plug. Care must be taken to ensure both plug and socket are correctly located and fixed in position by the screws provided.
4) (Standard Diverter models only.) Primary flue pipe and draught diverter complete with casing bezel. Instructions are supplied with the draught diverter on how to assemble the unit, if required. These instructions **MUST** be followed correctly and fully complied with to ensure correct operation.

NOTE! Ensure the baffle(Not fitted to 120kW boiler) is positioned correctly and laying flat on the heat exchanger before fitting the flue hood onto the boiler (if removed).

10.2 Heat Exchanger Insulation Fitting Instructions

With reference to Figure No. 5a - Unfold blanket and offer up to the boiler as shown. Ensure gas pipe cutout is positioned to the left and that the 'petals' are uppermost. Sit the insulation blanket onto the basket ensuring a snug fit.

Figure No. 5a

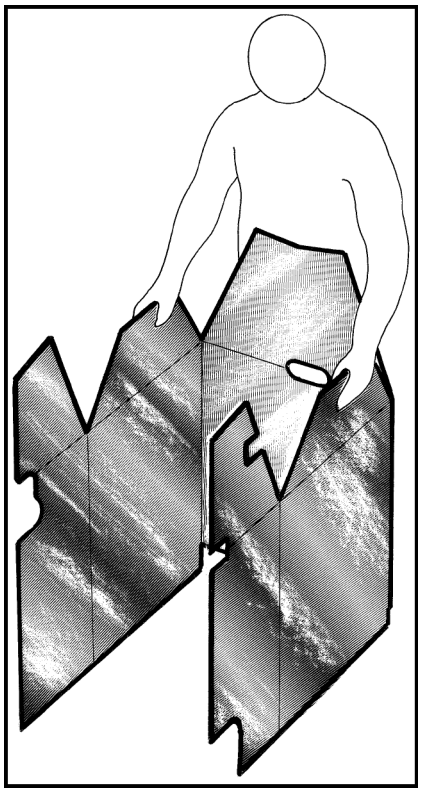

Reference to Figure No. 5b - Insulation should be folded around boiler such that its rear edges meet in the centre. Ensure flow and return connections are clear and unobstructed. Apply foil tape down join.

Figure No. 5b

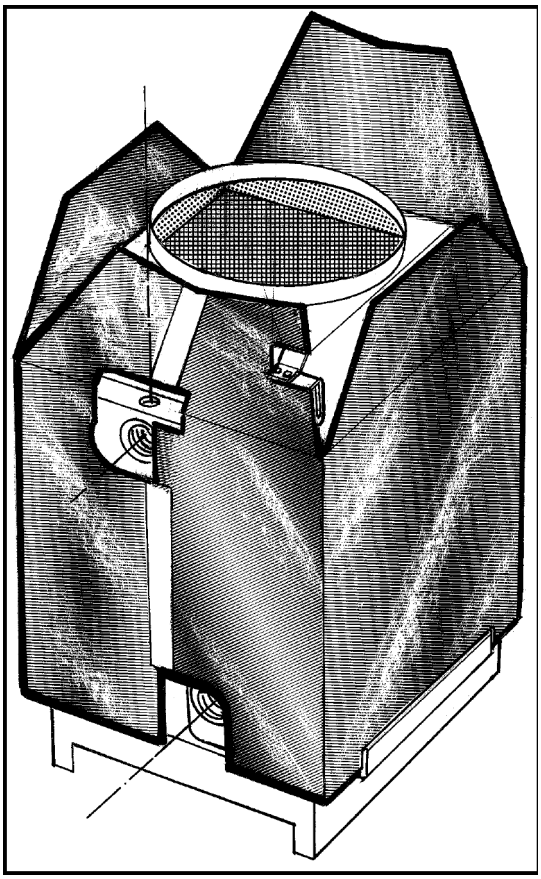

Reference to Figure No. 5c - Fold down petals as shown. Use foil tape to affix edges. Fold as required. Ensure gas pipe bracket is clear and unobstructed.

Figure No. 5c

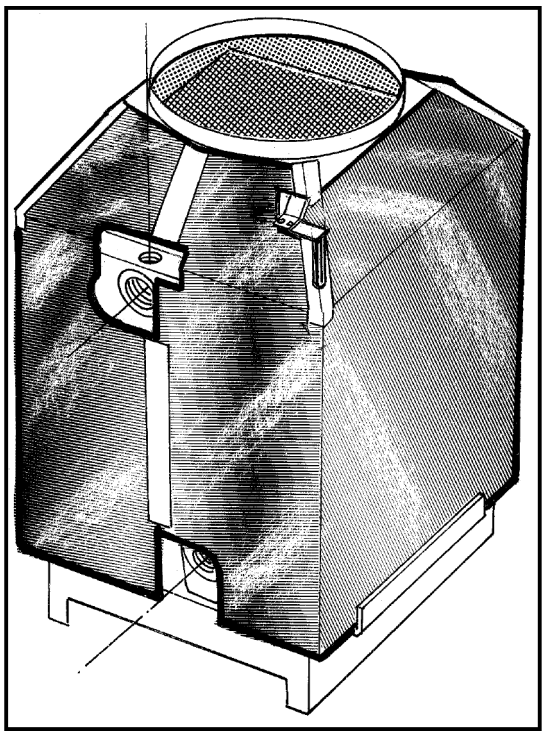

Ensure combustion air passages are unobstructed when fully fitted.

10.3 Gas Pipe Fitting Instructions

With reference to Figure No. 6a - Remove half union and gas valve from gas train. Ensure gas valve/manifold bracket does not suffer undue stress/movement. Affix half union and gas valve assembly to gas pipe as shown using proprietary sealing compound. Ensure gas valve lever is correctly orientated. Offer gas pipe to boiler as shown. Bracket's position will be dependent on boiler size.

Figure No. 6a

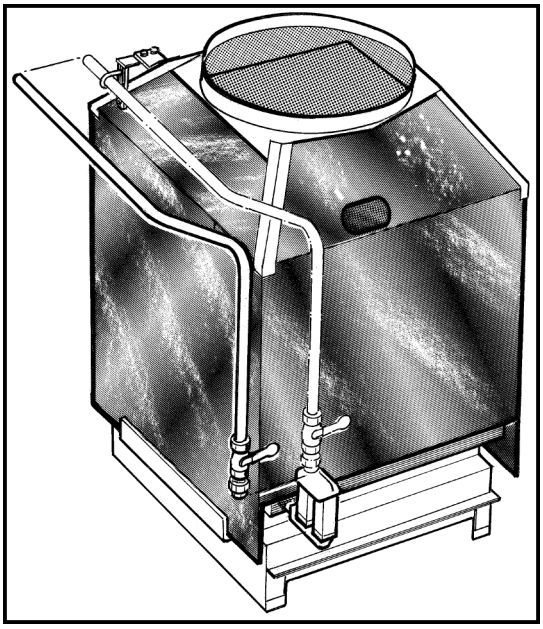

Figure No. 6b shows the pipe clamp fitted to Purewell 60, 70, 80 and 120 kW boilers.

Figure No. 6b

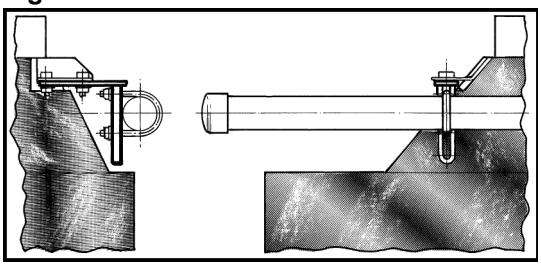

Figure No. 6c shows the pipe clamp fitted to Purewell 40, 50, 95 and 105 kW boilers.

Figure No. 6c

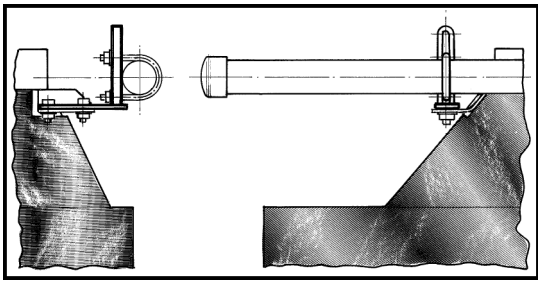

Tighten screws ensuring 'U' clamp threads do not damage insulation. It may be necessary to remove the bottom thread of the 'U' clamp with the bracket in lower position as it may foul the draught hood. Ensure no undue stress is placed on the gas pipe/manifold and ensure pipe is vertical/horizontal before clamping in position.

10.4 Connection to the Flue System

Notes on the recommendation for design of the flue system are given in **Section 6:FLUE SYSTEM**.

10.4.1 Standard Diverter models: -

When supplied with a draught diverter, it must be fitted to the boiler as supplied, **NO** modifications are permitted on site. Prior to fitting the assembly to the boiler, the top casing panel should be removed from its packing and placed in position. Fitting this panel after the flue is fitted is not recommended. Care should be taken to ensure the seal between primary flue pipe (Standard Diverter model) and boiler spigot is sound, as a leak may affect the boiler's operation.

10.4.2 Low Line models: -

The Low Line model incorporates its own draught diverter and care must be taken to ensure the seal between the outlet spigot and flue pipe is sound to avoid the escape of flue gas.

10.4.3

The top panel will require protecting to ensure no damage occurs to the plastic coating during subsequent site assembly of other components.

It is important, for service requirements, that the flue system is fully self-supporting. Check the flue and chimney are clear from obstruction.

10.5 Gas Connection

The Purewell boiler is supplied with a gas pipe which, when assembled, exits the casing at the rear. See Figure No. 9 for position. The incoming mains gas supply must be capable of supplying gas to the boiler at the required pressure, under all firing conditions. For sizing information see Figure No. 11. An approved isolating valve & union should be installed for each boiler in a convenient and safe position and be clearly marked.

10.6 Water Connections

See Figure No. 9 for position of water connections (flow and return). A ½" BSP plug is fitted local to the return connection for the fitting of a drain cock, NOTE! (Not HHL supply.) Care must be taken when installing water system pipework that undue stress is avoided on the boiler flow and return connections. It is recommended that unions are fitted local to the boiler to permit future servicing requirements.

Fully closing valves must not be connected to both flow and return pipes unless the boiler is fitted with an individual, correctly sized safety valve. It is recommended that a 3-way 'L' port valve is fitted in the flow connection to allow an open vent situation should the boiler need to be fully isolated from the system.

10.7 Casing and Controls Assembly

For assembly of casing components and controls unit see Figure No. 7.

Figure No. 7 - Assembling the Casing/Multi-Casing Set.

Multi-casing.

Note: Where boilers are in Modular form, i.e. MP360 (3 x 120kW), a multi-casing pack is provided for each additional boiler. For example: a triple boiler module will require: - 1 off single casing pack plus 2 off multi-casing packs. If the support bar (bottom rail of item 22) has not been pre-assembled, the following procedure must be taken: -

1) Loosen the nuts that clamp the boilers together, (1 front and 1 rear). Remove the bolt, spacer and nut assembly.

2) Position the support bar (item 22) between the boiler baskets. Assemble using the "pozi-pan head" screws (item 13) and M6 nuts (item 3).

3) Select the remainder of item 22: front, top, and rear bars and fit the 'U' nuts (10 off item 4), the latch (2 off item 2) and door location brackets (2 off item 7). The rear member uses 6 off 'U' nuts (4 off in the two lower pairs of holes and 2 off in the angle bracket at the top).

Assemble the frame using the No 8 self-tapping screws (item 5), the M6 pan head screws and washers (items 12 and 13).

Single and multi-casings.

4) Select the both side panels (items 17 & 18) and fit the latches (item 2), 'U' nuts (item 4) and location brackets (item 7) as shown opposite.

5) Attach side panels to the basket using items 3, 12, 13 and 14. Attach back panel. **DO NOT FULLY TIGHTEN SCREWS.**

6) Locate the control panel, and fit using No. 8 x _" self tapping screws (item 5).

7) Locate the top panel and fit the strikers (item 2) **NOTE! L/L** fit all four, **D/D** two at rear only. Ensure the blade is fitted as shown. Fit the 'U' nuts to the top panel. Place the top panel in position and pass the draught diverter through to locate into boiler spigot. Fit the draught diverter into the boiler hood spigot and ensure a complete seal is made between hood and diverter. For Low Line models the flue is connected directly into the boiler spigot. Ensure the seal is made between flue pipe and spigot. Refer to **section 10.2: Connection of Boilers to the Flue System** for further information. With the flue correctly fitted, lower the top panel and press the latch and strikers together and secure at the front with 2 off No. 8 self tapping screws (item 5) through the control panel top edge.

8) Tighten the back panel screws (item 5) and fit screw covers (part of item 14) to item 13 on side panels.

9) Attach the location pins (item 8) to the two holes in the 25mm return on the door by using M4 x 20 pan head screws (item 9), washers (item 11) and nuts (item 10). To fit the door, locate the slotted holes in the bottom onto the location brackets (item 7). Close the door against the control panel fascia ensuring the locating pins enter the holes. Turn the 1/2 turn latch in the centre of the door to lock.

Item	Description	* No.	** No.	Item	Description	* No.	** No.
1	M5 x 6 Pan. Hd. Screw	4	4	13	M6 x 16 Pan. Hd. Screw	4	6
2	Latch and Striker	2+2#	2+2#	14	M6 Screw cover	4	-
3	M6 Nut	4	2	15	Latch Assembly	-	-
4	`U` Nut for No. 8 Screw	10	16	16	Door Edging	-	-
5	No.8 x1/2" Self tap. screw	10	16	17	L.H. Side Panel	1	-
6	M5 Spring Washer	4	4	18	R.H. Side Panel	1	-
7	Door Location Bracket	2	2	19	Rear Top Panel	1	1
8	Nylon Door Location Pin	2	2	20	Door	1	1
9	M4 x 20 Pan. Hd. Screw	2+2#	2+2#	21	Back Panel	1	1
10	M4 Nut	2+2#	2+2#	22	Top, Front, Rear & Support Bars	-	1
11	M4 Shakeproof Washer	2+2#	2+2#	23	Front top panel	1#	1#
12	M6 Int. Shakeproof Washer	4	6	24	Stepped Spacer	2#	2#

NOTE ! *** = Single casing set** **** = Multi casing set** **# = Lowline only**

Figure No. 7a - Exploded View of Casing Set.

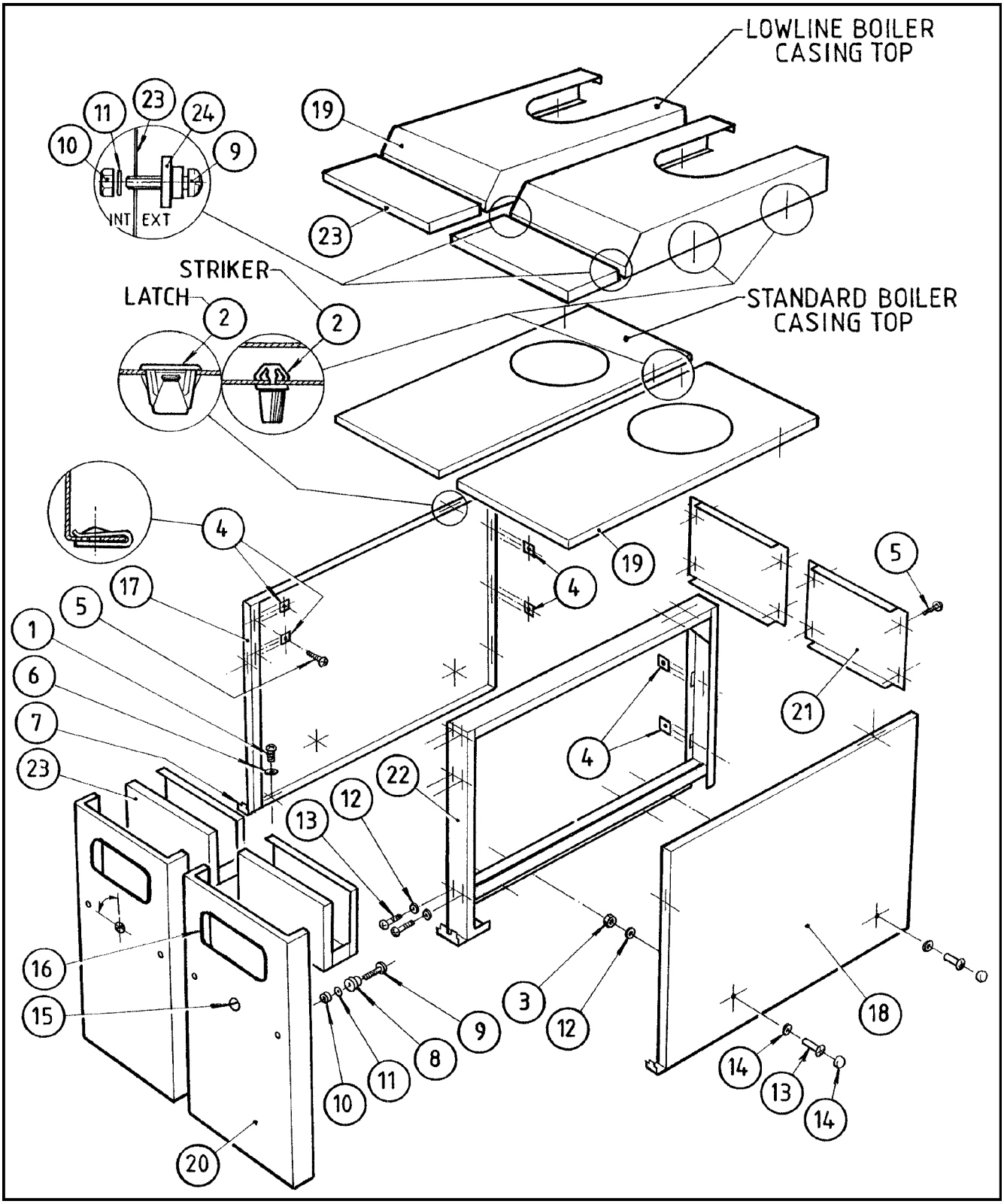

11.0 COMMISSIONING AND TESTING

11.1 Electrical Installation

A suitably competent person **MUST** check wiring. Power supply required is 230 volts AC single phase 50Hz. An isolator correctly fused at 6A should be sited close to the boiler.

Access to the controls is achieved by rotating the _ turn latch and removing the door. Connections to the boiler should pass through the 2 x 20mm wiring gland plate. If a single header pump kit is used then this power source must be constant and not switched by any time clock. The boiler is supplied with a remote stop/start circuit for time clock operation.

Any other interlocks, i.e. Pressurisation unit, BEM System should be wired in series with the remote stop/start loop.

The site wiring terminal rail is marked with Live, Neutral and Earth connections. See Figure No. 10 for details. **IMPORTANT: READ THE WARNING NOTE REGARDING EXTERNAL VOLTAGES.** This rail is of the plug/socket type and can be unplugged for wiring if required. A schematic of the circuit is shown in Figure No. 13, optional extras (if fitted) are also shown.

11.2 Gas Installation

For design see **Section 5:GAS SUPPLY.**

The whole of the gas installation including the meter must be inspected and tested for soundness and purged in accordance with the recommendations of **BS 6891** or **IM/2** or **IM/5** as appropriate.

11.3 Water Circulation System

For design see **Section 8:WATER SYSTEM.**

The system should be thoroughly flushed out with cold water without the pump in position. Ensure all the valves are open.

With the pump fitted the system should be filled and air locks cleared. Vent the radiators and check for leaks.

If the system is unvented the pressurisation unit should not be utilised for the initial filling. This should be carried out using a WRC approved double check valve and temporary-filling loop.

In order to comply with local Water Authority Regulations, this loop must be disconnected when filling is complete. Water treatments should not be fed through the Pressurisation unit unless permitted by the manufacturer.

Check the expansion vessel cushion pressure as detailed by the manufacturer's Installer's Guide.

11.4 Commissioning The Boiler

Before attempting to commission any boiler, ensure that personnel involved are aware of what action is about to be taken and begin by making the following checks: -

1) Flueway passages to chimney are clear.
2a) Standard Diverter models: - If necessary, remove the flue hood and baffle, (not fitted to the 120kW boiler), to ensure the boiler flueways are clear. Reposition the gas baffle ensuring that it is lying flat on the top section. Re-fit the flue hood. Ensure boiler draught diverter passages are clear and clean.
2b) Low Line models: - The Low line draught diverter incorporates an integral inspection cover. To gain access, remove insulation and the M6 bolts on the sloping front of the hood assembly. This will reveal the inner part of the boiler, if further access is required, remove primary flue pipe (ensure it is correctly supported), and remove complete top of the draught diverter assembly. After cleaning the boiler re-assemble draught diverter in the reverse of dis-assembly. Ensure all joints are correctly sealed.
3) Adequate ventilation as per **Section 7:AIR SUPPLY** exists in the boiler house.
4) The system is fully charged with water, ready to receive heat. All necessary valves are open and the pump is circulating water.
5) The pipework and valve arrangement is installed to Hamworthy Heating recommendations in such a way that water flow rates will be in accordance with Figure No. 1.
6) The gas supply pipework is clear of any loose matter, tested for soundness and purged to **CP: 331/3**.

11.5 Boiler Checks Prior To Lighting

NOTE! Refer to Figure No. 1 for Natural Gas maximum inlet pressure for normal operation. Information relating to propane firing can be found in Appendix 'A'.

Note: - all propane firing boilers are fitted with a low gas pressure switch (set at 20mbar). Should the pressure fall below this level, the boiler **will not** operate.

1) Gas supply is connected but turned to the "off" position. Any unions or fittings are correctly tightened, test points are closed, burners correctly positioned, injectors are in place (of correct size) and tight and that the pilot is connected to the gas valve.
2) Ensure electricity is connected but 2A fuse on boiler is removed, the plug/socket gas valve connection is correctly located and fully tightened with screws provided and that the thermostat bulbs are fully inserted into the boiler pocket. Ensure the thermocouple is correctly connected between gas valve and pilot burner.
3a) All Models: - Re-set temperature limiter by firmly pressing pin on unit.
3b) Non-Pilotstat models: - Ensure energy cut-off (ECO) connector is correctly located between valve and thermocouple. Check the leads for damage and

that they are firmly fitted to the temperature limiter (high limit) thermostat.
4) Check Piezo unit is fitted securely on to its bracket and the lead is undamaged and correctly located.
5) Check setting of both temperature limiter and control thermostat. The temperature limiter is generally set at 100°C from the factory unless otherwise instructed. Set thermostat to required temperature (normally 82°C). Remove knob to set limits if required.

NOTE! Minimum temperature setting should not be less than 72°C to avoid condensation in the flue if a 22°C system temperature rise is used.

NOTE! It is generally recommended that the minimum return temperature to a non-condensing boiler is 50°C.

6) If a single header pipe kit is fitted, the run-on timer should be set to 5 minutes. Check that the fuse on pump terminal rail is fitted.

11.5.1 Procedure for Initial Lighting (Non-Pilotstat models only)

WARNING: If the pilot light is extinguished either intentionally or unintentionally, **no** attempt should be made to re-light the pilot until at least 3 minutes have elapsed. **This delay is for safety reasons and MUST not be ignored.**

Ensure electricity supply to the boiler is off, i.e. (2A fuse on fascia is removed.) Turn control thermostat to minimum.

Light pilot burner by repeatedly pressing the button on the piezo unit whilst pushing/twisting the 'start' button on the control valve fully in. (See Figure No. 14 for alternative valve descriptions). **Note: -** for propane models only SIT or Honeywell gas valves are used.

Hold the button in for a further 20 seconds once the pilot is seen to light. Release button slowly. The pilot burner should remain alight. If however it goes out, push in the 'stop' button and **wait 3 minutes** before repeating above procedure.

If the pilot does not light after repeatedly operating the piezo unit for several seconds, re-vent the gas line to the outside of the building. Check whether spark and gas are present at the pilot. (See **Section 12:FAULT FINDING**). Having established the pilot, release the 'start' button and remove the pilot adjustment cover screw on the gas control valve. (See Figure No. 16 for relevant gas valve fitted).

11.5.2 Procedure for Initial Lighting (Pilotstat models - Natural Gas only)

WARNING: If the pilot light is extinguished either intentionally or unintentionally **no** attempt should be made to re-light the pilot until at least 3 minutes have elapsed. **This delay is for safety reasons and MUST not be ignored.**

Ensure electricity supply to the boiler is off, i.e. (2A fuse on fascia removed). Turn control thermostat to minimum.

Refer to Figure No. 17 for position of Pilotstat button etc. To light the pilot press the push-button marked 'pilot gas valve' on the fascia whilst operating the piezo spark unit. Once the pilot has lit, stop pressing the piezo spark unit and depress the red button on the Pilotstat unit. After approximately 20 seconds release the Pilotstat button and then the fascia push-button. The lockout indicator should be 'off' at this stage. If not, **NO** attempt should be made to re-light the pilot until at least 3 minutes has elapsed. **This delay is for safety reasons and MUST not be ignored.**

11.6 Gas Pressure Adjustment and Combustion Checks

Adjust the screw so that the flame envelops the tip by approx. 12mm. After pilot adjustment, check time clock circuits (if fitted) are closed. Replace 2A-control fuse on fascia. Adjust control thermostat to required temperature: the gas valve should open and main burner ignite.

After the boiler has operated for approximately 10 minutes, remove the 2A-control fuse on the fascia. Open the pressure test point screw on the burner manifold and fit a manometer (suitable for 30mbar - Natural Gas or 50mbar - Propane). Check gas pressure reading against that shown in Figure No. 1 or Appendix 'A'. Adjust control valve regulator as required by removing cap and turning with a screwdriver. Refer to Figure No. 16 for alternative gas valve details.

Remove manometer and close all pressure test points, (Replace caps if fitted). Record all readings for future reference on relevant commissioning sheet.

Check no flue gas spillage occurs from the diverter: Ref. **BS 5440**:Part1 will give guidance if required. Allow system to warm up sufficiently to check operation of control thermostat.

11.7 Temperature Limiter (Limit Thermostat)

Check temperature limiter setting. This can be achieved by isolating the power supply and removing the door. Remove the plastic cover (unscrewing) if fitted. Undo holding nut and withdraw into the controls housing. Adjust if required and replace in reverse order to above.

A combustion check must be taken when first commissioning the boiler. A sampling point is provided, in the flue on draught diverter models or on the inspection door of low line models (fitted under rear casing). Remove plug and insert sampling probe. Replace plug when test is complete. **NOTE!** Care should be exercised if the boiler is firing as the flue can achieve temperatures, which will produce injury if touched.

Combustion figures for Natural Gas should be as follows: -
CO_2 = 9% (Dry flue gas).
CO = 0-50ppm: however figure should not exceed 200ppm under normal operating conditions.

Details of flue gas composition relating to propane firing can be found in Appendix 'A'.

The flame supervision device can now be checked by closing the gas cock on the inlet of the gas valve (Pilotstat models) or by pressing/twisting the stop button on the gas control valve (Operation dependent on gas valve type fitted.) for non-Pilotstat models. After approximately 45 seconds the solenoid valve should be heard to click closed. **Wait a further 3 minutes** and carry out pilot lighting procedure.

11.8 User's Instructions

When the above is complete, the end user or their representative should be made aware of the lighting and operating instructions fitted to the inside of the boiler door. A practical demonstration should be given describing each functional step. This Installer's Guide and user's instructions should then be handed over and be kept in a safe place for easy reference.

12.0 FAULT FINDING

12.1 Safety Features Summary

Should the control thermostat fail, the temperature limiter will trip thus creating an immediate shutdown regardless of firing mode. If this occurs the temperature limiter situated in the controls housing will require re-setting by pushing the small pin in firmly. **Note!** Access to this pin is gained by removing door and unscrewing safety cover (if fitted). An investigation should be carried out to ascertain the reason for the overheating. An obvious reason would be too low a water flow rate through the boiler. **NOTE!** The pilot will not remain established if this pin is not re-set manually.

Volt free contacts are available for connection to BEM system (optional extra). Non-Pilotstat models require a pressure switch to be fitted in the pilot gas line and in the event of pilot failure this activates a lockout relay in the controls and neon on the fascia.

All propane-firing boilers are fitted with a low gas pressure switch (set at 20mbar). Should the gas supply pressure fall below this level, the boiler **will not** operate.

12.2 Fault Finding Procedures

General fault finding is shown in Figure Nos.18a & 18b. If the boiler still cannot be operated satisfactorily after following the chart, consult your local office of Hamworthy Heating for assistance.

12.3 Possible Causes of Boiler Lockout

1) Pilot failure due to faulty thermocouple.
2) Weak pilot due to blockage in pilot orifice.
3) No or low gas supply pressure.
4) Temperature limiter operating due to high boiler temperature or faulty thermostat.
5) Faulty main gas valve.
6) Loose ECO lead from gas valve to thermostat. (Non-Pilotstat models)
7) No electrical supply (Pilotstat models)

13.0 SERVICING

13.1 Regular annual servicing is recommended to ensure trouble free operation. Although cleaning of flueways may not be necessary on a yearly basis, it is important that all controls and safety features are checked for correct operation. **NOTE!** Measuring flue gas CO_2 and gas temperatures will give an indication of the state of the boiler flueways and waterways. Results should be compared with previously measured values to establish possible loss of efficiency.

13.2 Before servicing the boiler, the following procedure must be carried out: - **WARNING: Isolate all electrical supplies and turn off the gas service cock to the boiler module being serviced**.

1) Remove the front casing door using a screwdriver to rotate the 1/2 turn latch.
2) Turn off gas service cock, (fitted upstream of gas control valve).
3) Undo both screws on gas valve wiring plug, situated under controls assembly, and disconnect plug completely by pulling firmly downwards.
4) Disconnect ECO connectors at gas valve (if fitted), undo and disconnect pilot bundy tube from gas valve: disconnect piezo lead and thermocouple.
5) Slacken union below gas service cock and release. Slacken and remove nuts/washers holding gas valve and manifold assembly. Remove manifold assembly taking care not to damage or twist bundy tubing or gas valve, etc.
6) Undo and remove igniter assembly by removing screws from front tie bar (2 off). Carefully remove igniter assembly from under burner bar tie rod taking care not to twist or bend igniter electrode or bundy tubing. See Figure No. 10 for position of items. Check condition of igniter assembly thermocouple and injectors for damage, clean as required.
7) Carefully remove burner assembly by pulling and lifting burner front plate.

Check burner bars condition and clean using a soft brush if required (if possible use compressed air to blow out the dust inside the bar). Damaged or cracked burner bars should be replaced. To replace an individual bar will require drilling out the rivets holding it on to the front plate. A new single burner bar will be supplied with clinch nuts and screws to fix onto the front plate.

The boiler flueways can now be cleaned as follows: -

13.3 Standard Diverter models: -

1) Check the flue above the draught diverter is self-supporting before removing the two bolts on the draught diverter clamp and sliding the primary flue up inside the double cone assembly. The complete assembly can be removed and stored safely.

Lift flue bezel and remove the top-casing panel by removing the relevant screws. Lift off and store in a safe place to avoid damage or scratching.
2) Undo the screws supporting the gas pipe clamp. **NOTE!** The boiler gas pipe may require supporting in order not to place undue stress on the main gas header pipe.
3) Carefully prise away the silver insulation jacket from the flue hood. Undo and remove the nuts holding the flue hood to the boiler. Take care not to move the locking nuts which locate the hood's position. Remove the gas baffle, (Not fitted to the 120kW boiler).

13.4 Low Line models: -

1) Check the flue above the flue pipe is self-supporting. Remove the top panel to gain access to the draught diverter. Remove the insulation and inspection cover (M6) bolts on sloping front.
2) If further access is required remove M6 bolts along top of draught diverter. The top section should now drop down to free the flue pipe. Undo M6 bolts from baffle top and swing baffle away.
3) NOTE! This baffle **MUST** be relocated in the correct position when re-assembling the draught diverter.
4) All models:- The boiler flueways are now exposed and can be brushed through diagonally in both directions to remove deposits from the cast iron finned surfaces. Re-assemble the boiler in the reverse order to that shown above. Ensure a new rope seal is fitted to the flue hood to maintain a gas tight seal. (See spares list). Ensure primary flue is sealed into flue hood spigot. The boiler's operation may be affected if this seal is not completely fitted.

Before replacing the burner bar assembly, lift out both halves of the radiant reflector and brush off any dust and fallen deposits accumulated on it. Also clean area under the reflector before re-placing it in its correct location. Re-assemble the burner bar assembly ensuring correct location on the rear support bracket. Re-fit the gas manifold taking care not to damage any fragile components.

Check all gas connections are tightened securely before opening the gas service cock. Switch on the electricity supply and re-light the boiler following the correct procedure on the inside of the door.

Take gas pressure readings and exhaust gas readings and compare with Figure No. 1 or for propane refer to Appendix 'A', adjust as required. Ensure no gas leaks are evident from the gas connections. See Figure No. 3 for procedure.

Check thermostat settings and adjust if required.

Re-fit door and tidy floor around boiler as necessary.

14.0 REPLACEMENT OF FAILED COMPONENTS

There are a number of components listed below which can be replaced simply and quickly by following the given procedure. In each case the operation of each replaced component must be checked by carrying out the appropriate part of the commissioning procedure. See **Section 11.0:COMMISSIONING & TESTING.**

NOTE: Isolate all electrical supplies to the boiler and turn off the gas supply before removing controls cover and commencing any servicing or component exchange procedure.

14.1 Pilot Burner Assembly

Reference to Figure No. 10 shows position of pilot burner. To remove pilot assembly the bundy tube, thermocouple and piezo spark cable must first be disconnected from the gas valve. Figure No. 15 shows diagram of pilot assembly and relevant components and part numbers. Renew components as required and generally remove any loose sooty deposits and clean as required. Ensure positions of components are as recommended in Figure No. 15.

14.2 Control Thermostat Renewal: Part No. 339009345 or 533901178

Alternative thermostat manufacturers may be used in the Purewell boiler controls assembly. However, the fitting and wire spade connections are physically identical. The terminal identification may well be different from that shown on the wiring diagram inside the fascia. Please refer to thermostat to ensure correct connections are made and correct operation is obtained.

To replace the thermostat the following procedure must be followed. **NOTE!** Record existing temperature setting of thermostat for reference before removal. Remove holding screws at front and lift boiler top panel to reveal thermostat pocket. Drop down fascia to reveal controls section. Remove the 'push on' spade connectors from the thermostat body noting position of coloured cables. Pull off the control knob and remove bezel. (Note! The two M3 screws holding the thermostat to its bracket may retain this). Note if screws are of different type/length for re-assembly purposes before removing them. The thermostat body can now be removed by gently feeding capillary through the controls bulkhead. Fit the new thermostat and ensure the capillary is

correctly located within the pocket. Do not force the bulb into the pocket by placing undue stress on the capillary. Close fascia and re-fit top panel correctly.

Run the boiler and turn the thermostat up and down to check for correct operation. Set thermostat to previously noted setting.

14.3 Temperature Limiter (Limit Stat) Renewal Part No. 533901168/533901180 (ECO type) or 533901179/33911044 (Pilot Stat Models)

The temperature limiter renewal procedure follows that of the control thermostat with some minor differences. These are as below: -

Remove the 'push on' spade connections from the temperature limiter body noting position of coloured cables. Remove plastic cover (if fitted) and unscrew holding nut/screws to detach temperature limiter from housing. Gently feed the capillary back through the controls bulkhead. Set temperature limiter to 100°C and assemble into controls housing ensuring correct cable notation. Refer to the thermostat diagram if terminal identification differs from those given in Figure No. 13, (Boiler schematic wiring diagram).

14.4 Main Gas Valve

NOTE! Some gas valve components can be replaced without completely removing the whole assembly from the boiler. However, Hamworthy Heating strongly recommend that a new gas valve assembly is fitted to ensure safe, reliable operation of the boiler. Please refer to Hamworthy Heating Technical Department before attempting to remove components from the gas valve.

NOTE! Only gas valves with an identical type No. may be used for replacement. Please contact Hamworthy Heating Spares dept. for further information.

Various types and manufacturers of gas valves are used. Refer to Figure No. 16 for alternative type of valve fitted.

1) Ensure power and gas supplies are isolated.
2) To remove the gas valve first undo and remove the pilot bundy tube, thermocouple, ECO connections (if fitted) and the piezo spark generator bracket.
3) Remove the gas valve wiring plug from the socket in the controls housing by un-doing both screws and pulling firmly downwards. Undo the union connection and 8mm nuts holding the gas valve/manifold assembly to front plate, this will allow the whole assembly to be removed from the boiler.
4) Remove the gas valve by unscrewing cap head screws or screwed fitting holding valve to pipework. **NOTE!** The position of the relevant electrical cables should be noted.

When replacing the gas valve, it is advisable to renew the 'O' ring seals (if fitted). See **Section 15.0 RECOMMENDED SPARES** for Part Nos. Do not over tighten cap head screws in gas valve body. Ensure electrical plugs are firmly and correctly located and holding screws are tightened.
5) Replace assembly ensuring correct orientation of the gas valve. Ensure that the gas flow is in the same direction as the arrow on the valve. Refit all external components and replace plug into controls housing socket, re-fit and tighten screws holding plug to housing. Switch on gas and power supply and check for integrity of all joints using a proprietary leak detector.

Ensure gas valve's operation is correct and safe before continuing. Refer to Figure No. 3 if necessary, for valve integrity check procedure.
6) Re-light the boiler using instructions on the inside of the door. Check and adjust the manifold gas pressure, refer to Figure No. 1 or Appendix 'A' for correct setting relating to the boiler size installed.

If necessary, refer to **Section 11.4: Commissioning the Boiler**, for correct procedures.

15.0 RECOMMENDED SPARES

Please Note! To ensure our spares department dispatches the correct spare parts, it is imperative that the complete Boiler/Control Panel Serial Numbers are given. The Boiler Serial Number is located on the gas manifold inside the door. The Control Panel Serial Number is located inside the Control panel on the maximum power-rating label. These numbers **MUST** be quoted when ordering spare parts.

SPARES ITEM	PART NO.
Electrical Items	
2 Amperes Control Fuse	747225834
6.3 Amperes Pump Fuse	747225842
Green Neon	533901031
Amber Neon	533901030
Red Neon	533901029
Hours Run Meter	533901067
Thermocouple	747439864
230 Volt VFC Single Pole Relay	533901204
230 Volt VFC Double Pole Relay	533901206
Mechanical Items	
Pilot Pressure Switch	339009477
Single Burner Bar	533301003
Heat Exchanger Nipple	330502033
Flue hood thermoseal Yarn (10 mm Dia.)	331299233
Injector Copper Washer	339008347
Pilot burner injector (Natural Gas only)	331101843
Gas Valve ‘O’ Ring Joint (40 - 80kW only)	742111245
Gas Valve ‘O’ Ring Joint (95 - 120kW Pilot-Stat only)	742122069
Piezo Generator and Lead	333805342
Control Thermostat	533901178(Imit)
“	339009345(L&G)
Temperature Limiter (ECO Type marked 100mV)	533901180(Imit)
“	533901168(L&G)
Temperature Limiter (Pilotstat type marked 230V)	533901179(Imit)
“	339011044(L&G)

NOTE! For any service/replacement parts (Especially Gas Valves) the boiler Serial No. (on Data Plate inside boiler) MUST be quoted.

For service or spares please contact: -

Hamworthy Heating Ltd.
Fleets Corner
Poole
Dorset BH17 OHH

Phone No. 01202 662500
Fax. No. 01202 665111

Figure No. 8 - Boiler Installation (Typical)

Key: t - Thermometer or sensor
p - Pressure gauge

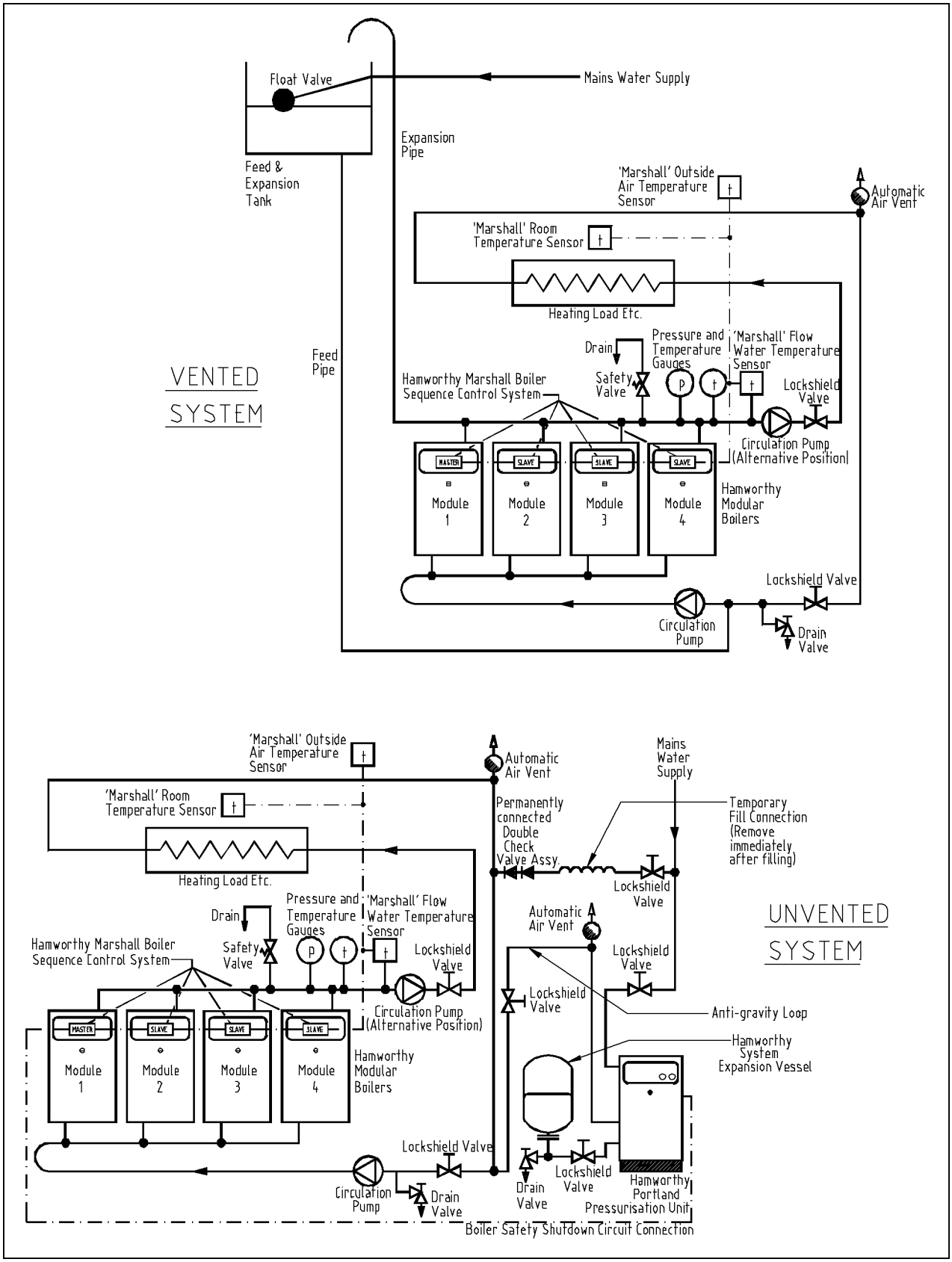

Figure No. 9 - Boiler Dimensions/Clearances.

Note! D/D = Standard Diverter model	40/50	40	60/70/80	70	95/105	100	120
L/L = Low Line model	D/D	L/L	D/D	L/L	D/D	L/L	D/D
Approx. Dry Weight kg.	235	240	285	290	345	350	400
A - Boiler Height (Casing) mm.	872	1007	872	1195	1060	1195	1060
B - Flue height from floor mm.	1404	1035	1475	1126	1577	1201	1671
C - Flow Connection Height mm.	573	573	667	667	761	761	855
D - Gas Connection Height mm.	769	769	769	769	957	957	957
E - Gas Connection - (BSP.T Male)	R ¾"	R ¾"	R ¾"	R ¾"	R 1"	R 1"	R 1"
F - Flue Outlet Dia. mm. (Nominal)	206	206	206	206	256	256	256

NOTE! The 533 centres relates to boilers close coupled in modular form. For stand-alone applications a minimum of 150mm should be allowed between casings. (Space baskets 200mm apart).

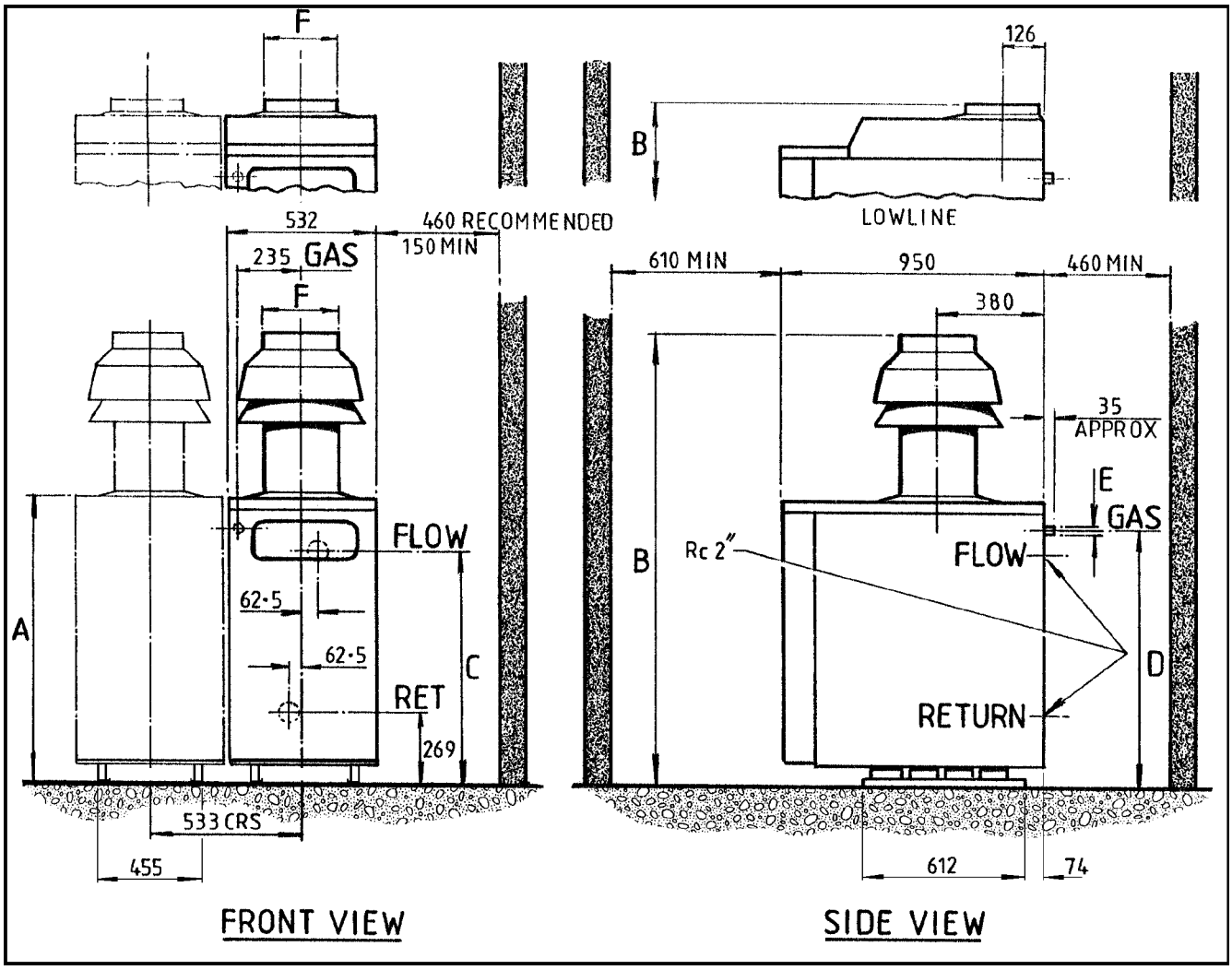

Figure No. 10 - General Layout (Front View).

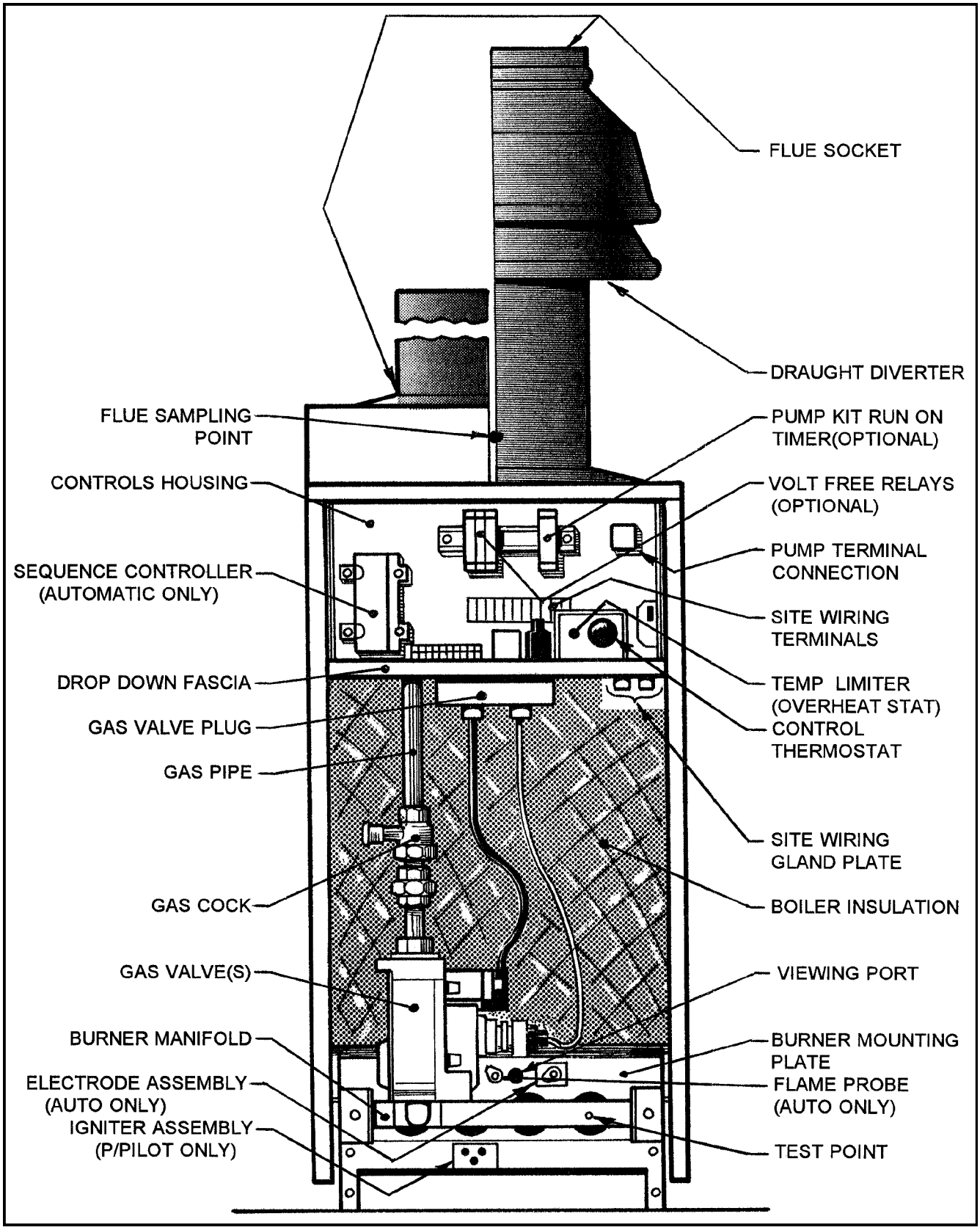

Figure No. 11 - Gas Flow in Pipes.

Purewell Boiler Output	Maximum length of gas pipe (Metres)						
	¾" dia.	1" dia.	1½" dia.	2" dia.	2½" dia.	3" dia.	4" dia.
40kW	10	42	-	-	-	-	-
50kW	-	25	180	820	-	-	-
60kW	-	16	120	540	-	-	-
70kW	-	11	85	380	-	-	-
80kW	-	-	62	280	900	-	-
95kW	-	-	42	185	580	-	-
105kW	-	-	33	145	470	-	-
120kW	-	-	25	110	345	-	-
160 (2 x 80kW)	-	-	12	56	180	-	-
190 (2 x 95kW)	-	-	-	38	120	750	-
210 (2 x 105kW)	-	-	-	30	96	600	-
240 (2 x 120kW)	-	-	-	22	72	440	-
285 (3 x 95kW)	-	-	-	15	47	290	-
315 (3 x 105kW)	-	-	-	11	37	235	-
360 (3 x 120kW)	-	-	-	-	27	170	810
380 (4 x 95kW)	-	-	-	-	24	150	730
420 (4 x 105kW)	-	-	-	-	19	115	570
480 (4 x 120kW)	-	-	-	-	14	86	430
525 (5 x 105kW)	-	-	-	-	11	71	340
600 (5 x 120kW)	-	-	-	-	-	51	245
630 (6 x 105kW)	-	-	-	-	-	46	220
720 (6 x 120kW)	-	-	-	-	-	34	165

The above table expresses pipe lengths from gas meter to appliance which will produce approx. 1mbar pressure loss. This table must be used in conjunction with losses of various fittings fitted in the gas line shown below.

Fitting Type	¾" dia.	1" dia.	1½" dia.	2" dia.	2½" dia.	3" dia.	4" dia.
Per elbow	0.5m	0.5m	1.0m	1.5m	2.0m	2.5m	3.5m
Per Tee	0.5m	0.5m	1.0m	1.5m	2.0m	2.5m	3.5m
Per 90∞Bend	0.3m	0.3m	0.3m	0.5m	0.5m	1.0m	1.5m

For example: - 2 Purewell 120kW Boilers being fed by 2 ¾" pipe with 6 elbows between gas meter and boiler header can have a maximum length of 72m - (6 x 2m) = 60 metres run to achieve a 1mbar loss.
Note! Information above is based on IM/16.

Figure No. 12 - Purewell Boiler Site Wiring Diagram (Permanent Pilot).

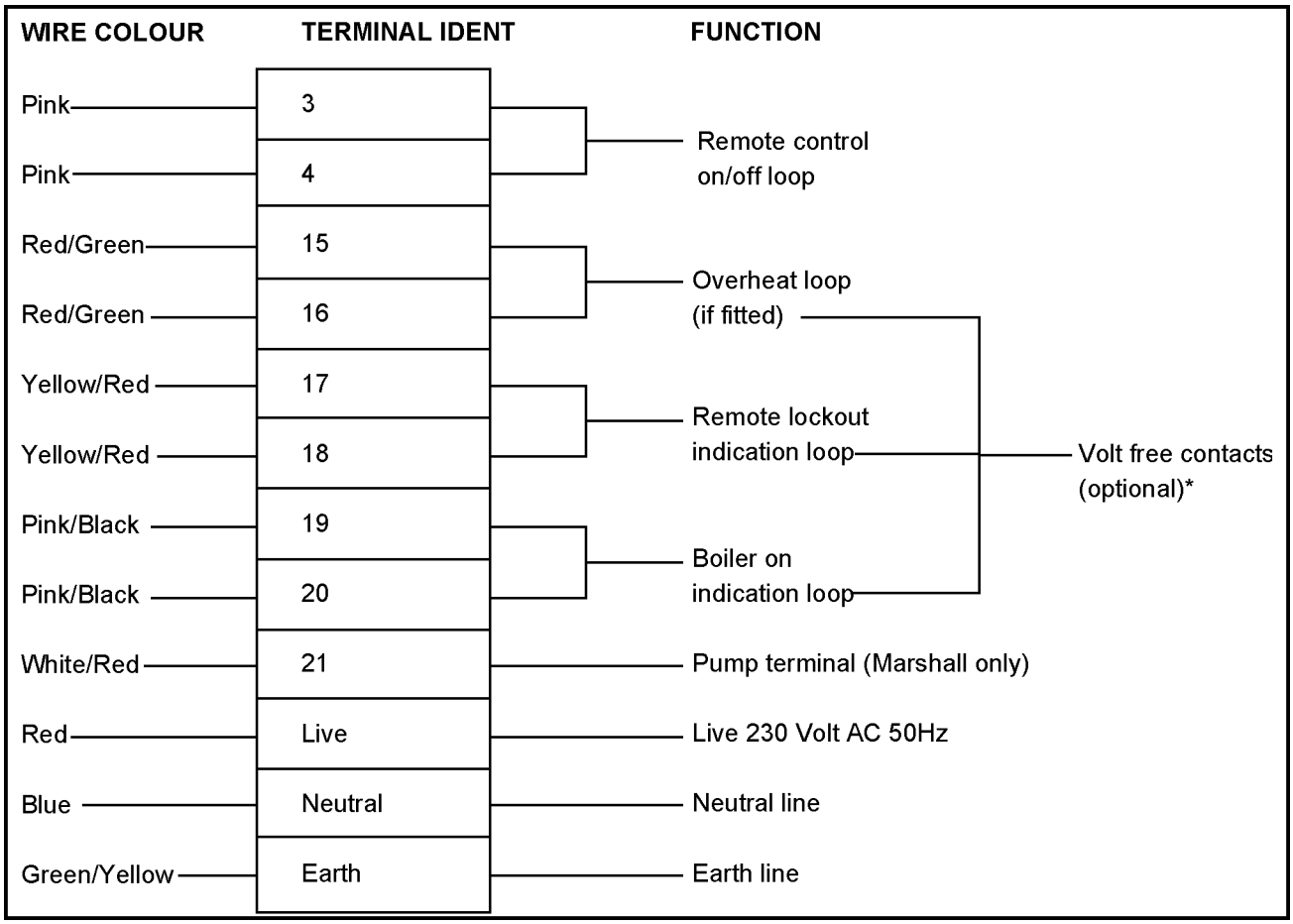

NOTE!....Maximum rating of a volt free contact(s) is : 3 Amperes Resistive

WARNING! External voltage MUST NOT be applied to remote stop/start terminals 3 & 4 or high/low control loop terminals C3 & C4 or any terminals on the fascia.

NOTE! * Volt free contacts may have separate supply. Ensure all power supplies are completely isolated prior to working on the electrical circuits of this appliance.

Figure No. 13 - Standard Controls Wiring Diagram Schematic.

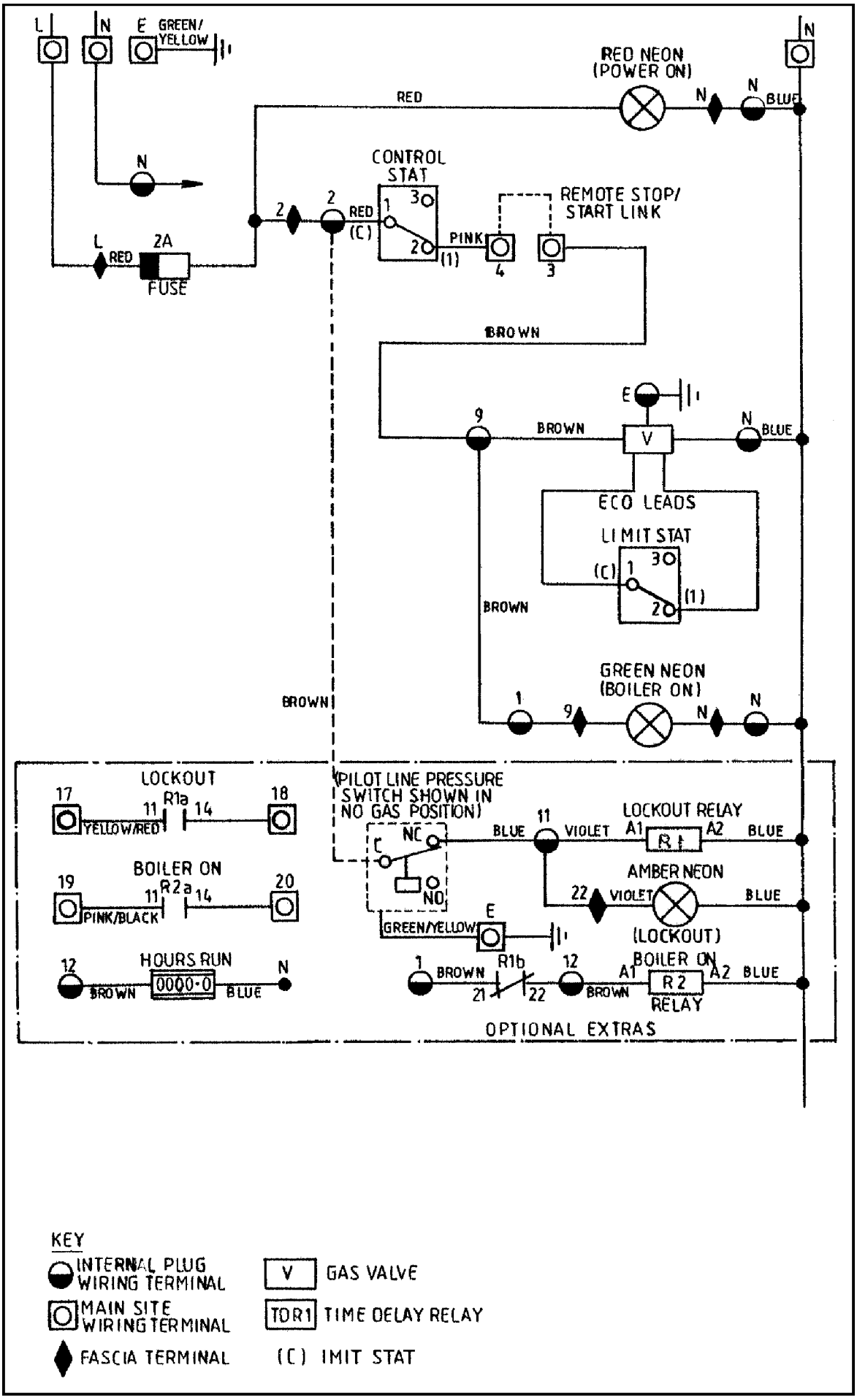

Figure No. 14 - Permanent Pilot Wiring Schematic (Pilot-stat operation)

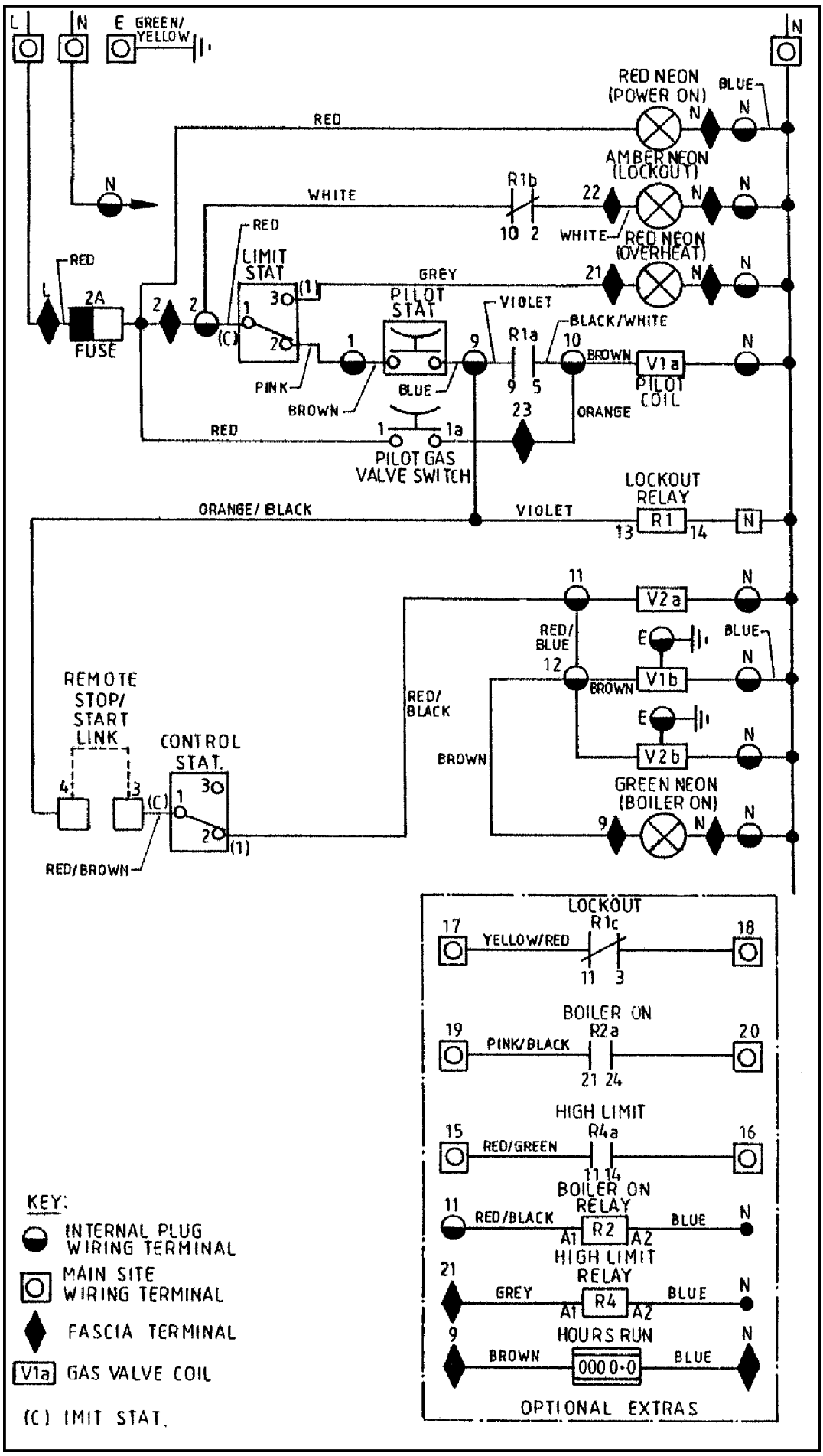

Figure No. 15 - Diagram of Igniter Assembly (Permanent Pilot)

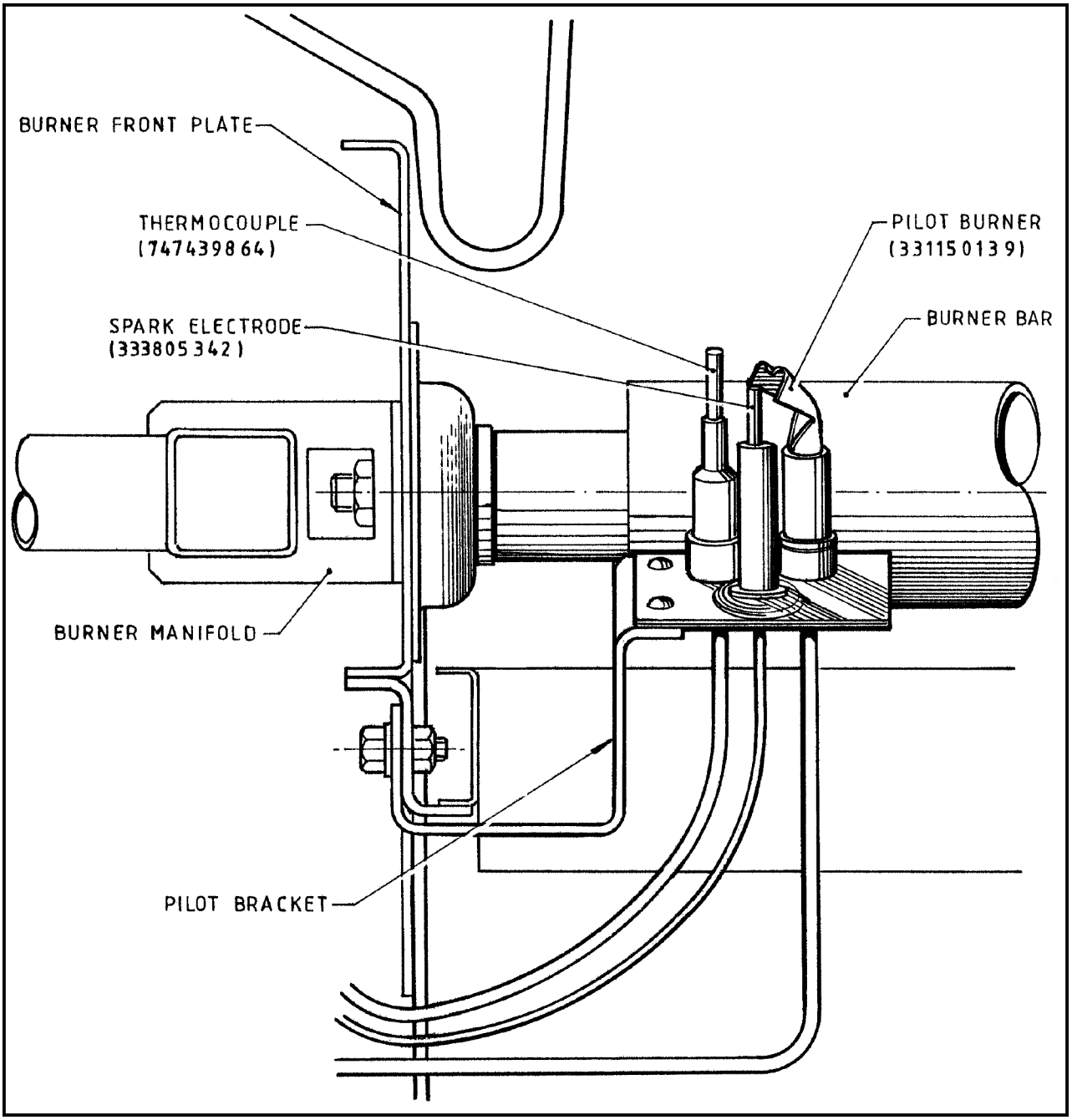

Figure No. 16 - Various Gas Valves Fitted to Purewell Boilers

a - Honeywell V4400 Series

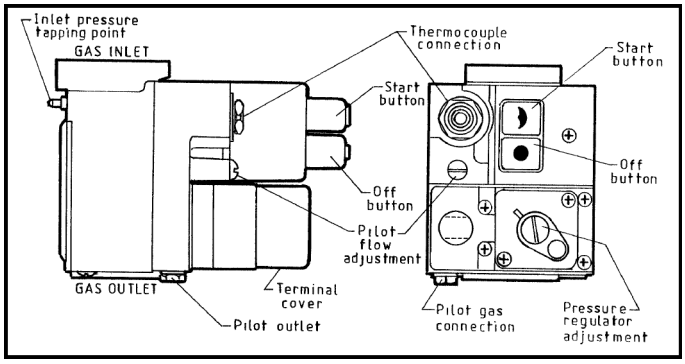

b - Honeywell V4600 Series

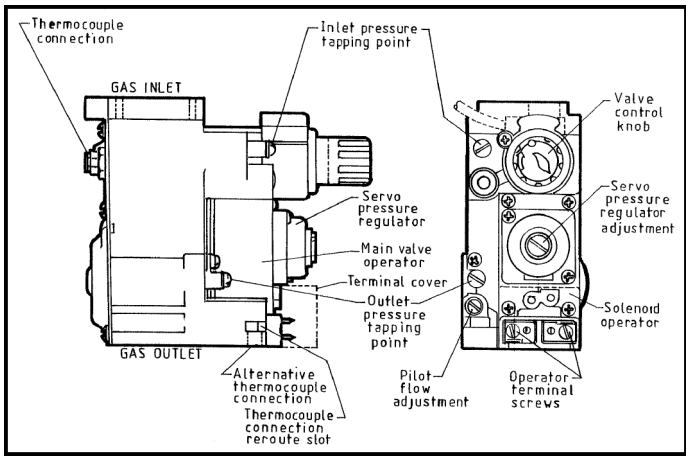

c - Robertshaw 7000 Series

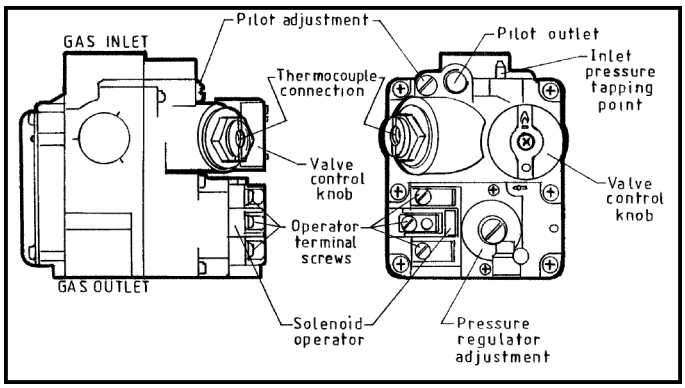

d - SIT NOVA Series

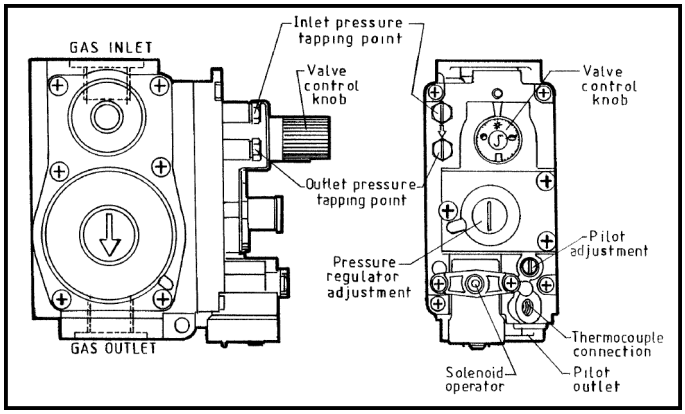

Figure No. 17 - Pilotstat Valve Assembly (Natural Gas Only)

The 'Flowshare' gas valve assembly is designed to pass the correct quantity of gas at the nominal inlet pressure of 20mbar and a maximum inlet pressure of 25mbar.

Refer to Figure No. 1 to find the gas pressure for the boiler being fired.

Fit a manometer (suitable for 30mbar) onto gas manifold pressure tapping point.

Light the boiler. Remove protective cap from the pressure regulator.
Turn the pressure regulator screw clockwise until the pressure stops increasing. Loosen Throttle locking nut (if fitted) and rotate the throttle valve adjuster screw until the manifold pressure is a approx. 0.5mbar greater than the required high fire gas pressure. Tighten the locking nut (if fitted) on the throttle adjuster screw.

Turn the pressure regulator screw anti-clockwise to fine trim the pressure.

Refer to Figure No. 16 for type of valve fitted.

NOTE! Honeywell valves shown in diagram.

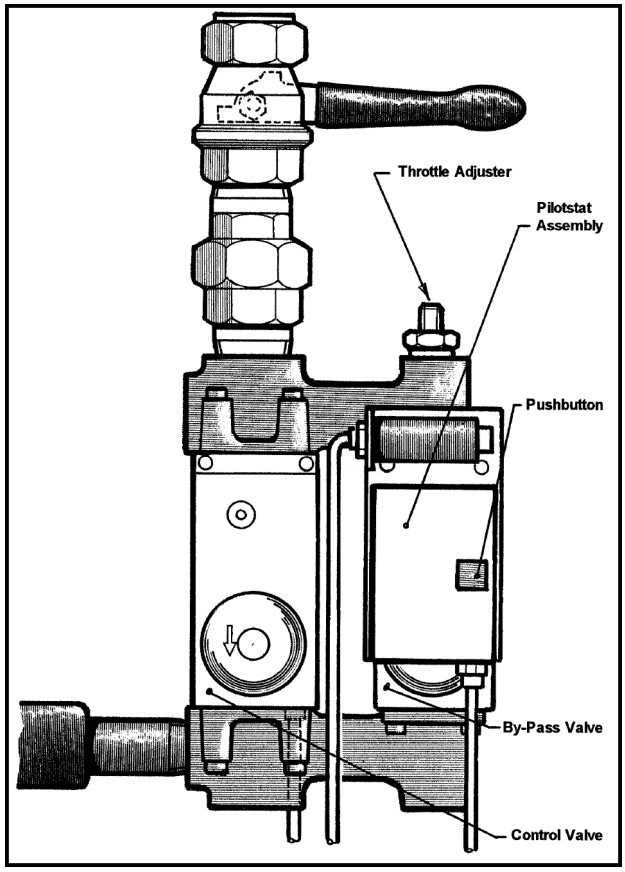

Figure No. 18 – Fault-Finding Procedures (Permanent Pilot Only)

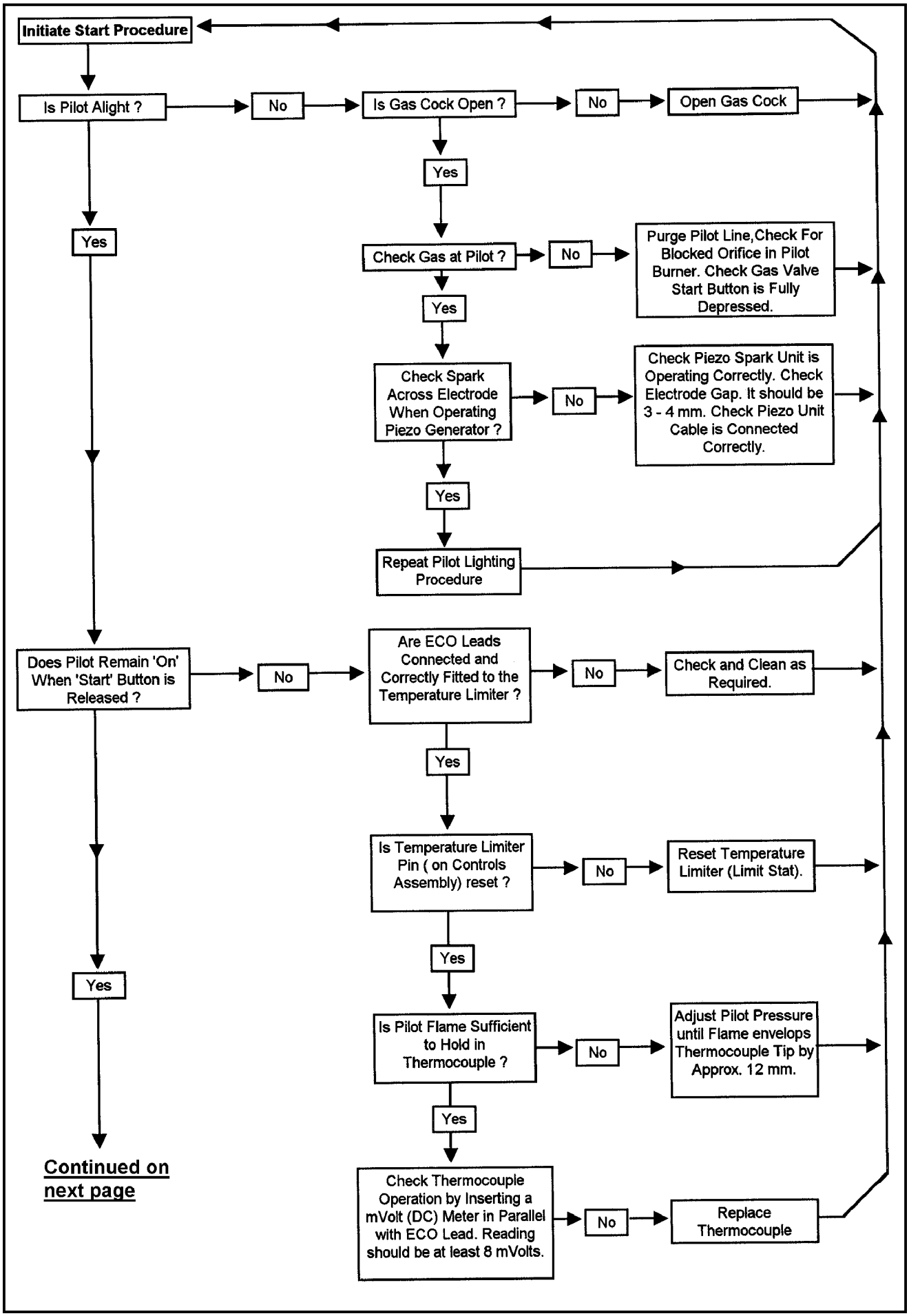

Figure No. 18a – Fault-Finding Procedures (Permanent Pilot Only) (Continued)

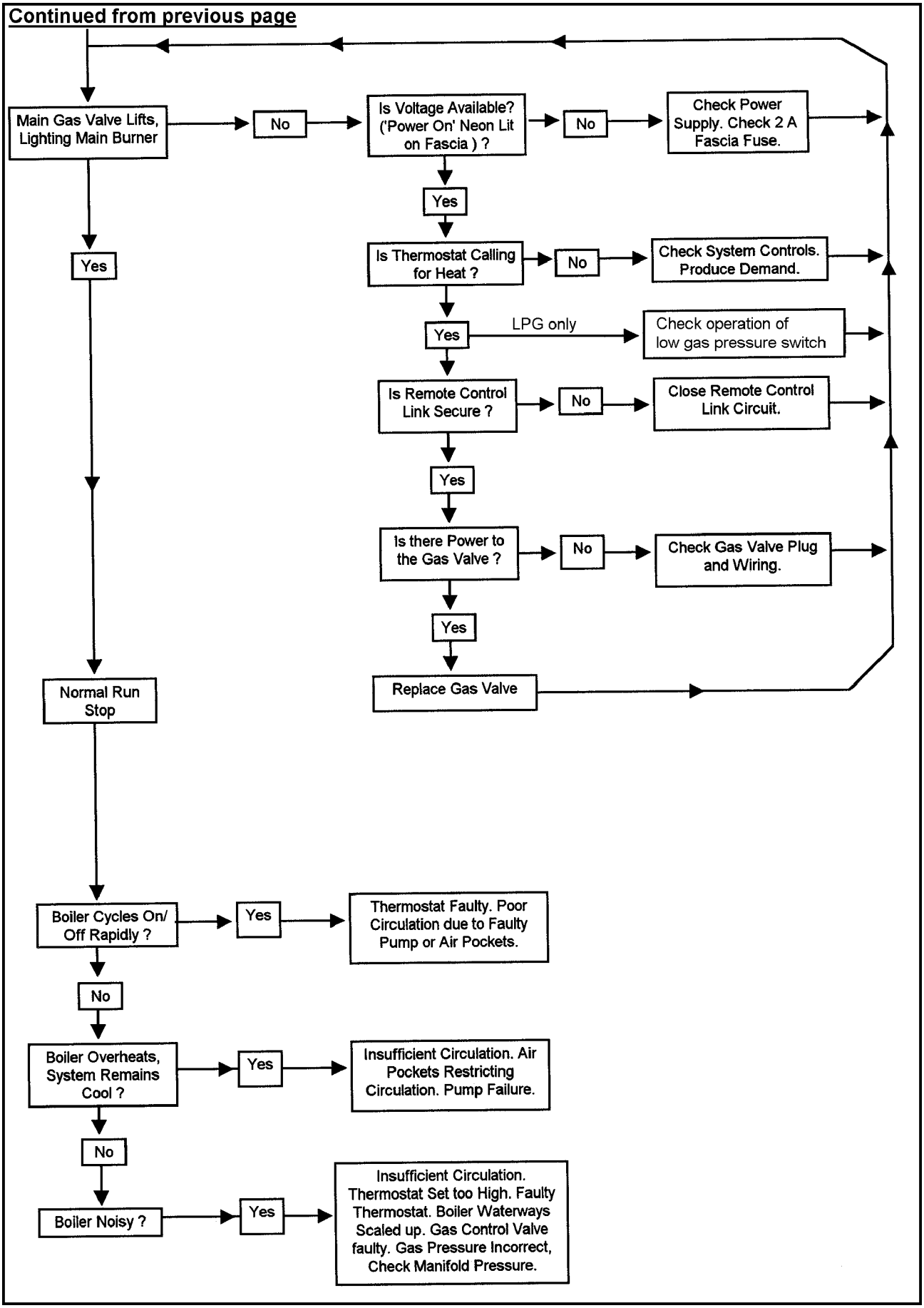

APPENDIX 'A' TO INSTALLER'S GUIDE

INFORMATION RELATING TO PROPANE FIRING

NOTE!
LPG FUELS - IT IS STRONGLY RECOMMENDED THAT, ON LPG INSTALLATIONS, GAS DETECTION EQUIPMENT BE FITTED. THIS EQUIPMENT SHOULD BE POSITIONED NEAR THE BOILER AND AT LOW LEVEL. IT IS ALSO IMPORTANT THAT THE SPACE HOUSING THE BOILER IS ADEQUATELY VENTILATED AT HIGH AND LOW LEVEL. REFER TO MAIN INSTALLER'S GUIDE.

1.0 INTRODUCTION

The operation of the Purewell range of boilers on LPG-Propane (3rd family)I_{3P} is similar to that on Natural Gas (2nd family)I_{2H} and the design and installation details described in the main body of the installer's guide should be followed. There are however, differences in the construction and setting of the propane fired boiler which are as follows: -

a) The pilot injector marked 56/42A for Natural Gas is replaced with an injector for Propane, marked 0.23P (perm/pilot only).
b) The main gas injectors (located in the gas manifold) are replaced with those detailed the Performance and General Data Information table below.
c) The nominal gas inlet pressure for propane should be 37mbar.
d) Relevant labels are replaced to indicate the appropriate gas for which the boiler is set up to fire.

The following tables and paragraphs, using the same numbering system as the main installer's guide, highlight the different values and procedures to be used when firing propane, and should be used in conjunction with the Main Installer's Guide.

Performance and General Data Information

GENERAL DATA		Model								
		40	50	60	70	80	95	100	105	120
Boiler Input kW (Gross)		49.3	63.4	74.5	88.4	101.0	120.0	126.0	132.0	150.0
Boiler Input kW (Net)		45.4	58.4	68.6	81.4	93.0	110.5	116.0	121.6	138.1
Boiler Output kW		40	50	60	70	80	95	100	105	120
Gas flow rate	m^3/h	1.9	2.4	2.8	3.3	3.8	4.5	4.7	5.0	5.7
	kg/h	3.5	4.6	5.3	6.3	7.2	8.6	9.0	9.5	10.7
Gas manifold pressure	mbar	15	15	15	15	17	29	23	25	24
FLUE DATA										
Approx. flue gas temp ∞C		180	190	190	200	210	200	200	210	190
Approx. flue gas vol. @ 9% CO_2 & NTP. m^3/h		68	83	81	97	110	132	147	147	175
CO_2 %		8.0	9.0	11.0	11.0	11.0	11.0	10.0	11.5	10.0
GAS DATA										
Nominal gas inlet pressure	mbar	37								
Maximum gas inlet pressure	mbar	45								
Injector marking/ Dia.	mm	2.1	2.3	2.6	2.8	2.9	2.4	2.7	2.7	2.9
Pilot burner(Perm/Pilot)		Q349A-1034 (with 0.23P injector)								

11.5 BOILER CHECKS PRIOR TO LIGHTING

Ensure that the gas supply is connected but turned to the 'OFF' position. Remove the cover on the low gas pressure switch and connect a multi-meter across terminals 'C & NO' - to measure circuit continuity.

Connect a manometer suitable for 50mbar to the pressure tapping on the switch body and gradually turn 'ON' the gas supply. The switch should operate at approximately 20mbar - noted on the multi-meter.

Turn 'OFF' the gas supply and undo the pressure test point on the gas valve inlet and allow the gas pressure to fall. The switch should operate at approximately 20mbar - noted on the multi-meter.

11.5.1 Gas Pressure Adjustment

After approximately 30 minutes of normal firing, connecting a manometer to test point on the manifold should check the manifold gas pressure. Minor adjustments to the appliance governor may be necessary to correct for site gas pressure conditions.

NOTE: The above is a first order check. Final setting must be made using a gas meter.

11.5.2 Combustion Checks

A flue gas sampling point is provided in the front boiler casing (see Figure No. 7). To check combustion take a flue gas sample from each module test point and for reference CO_2 measurements should be between 8.0% and 11.5% or 9.0 to 4.0% O_2 (dependant upon model). Normal CO levels should not exceed 200ppm.

NOTE: All the above measurements refer to **dry flue gas** samples.

Gas Pressure Switch Location

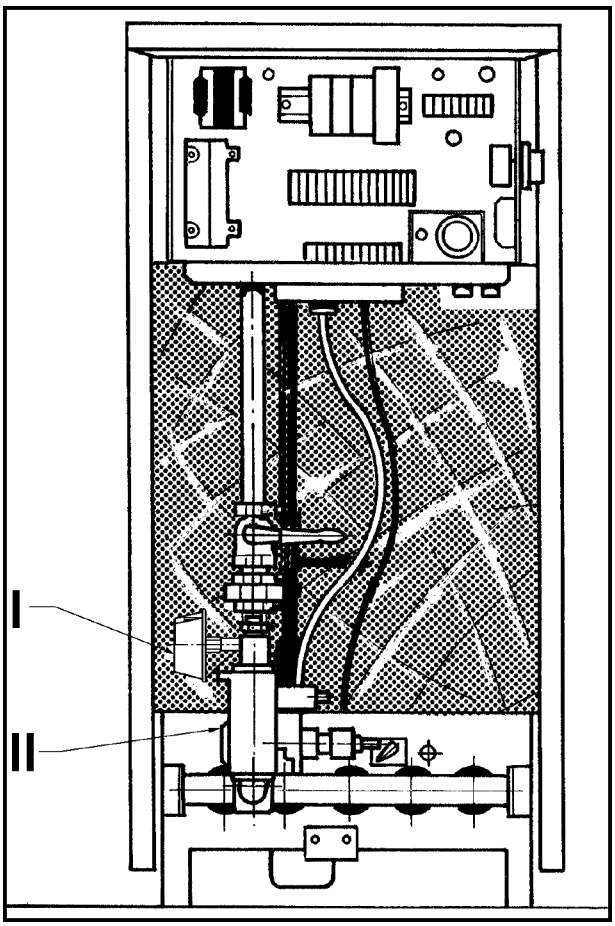

Key: I - Gas Pressure Switch
II - Main Gas Valves

Gas Pressure Switch - Wiring Schematic

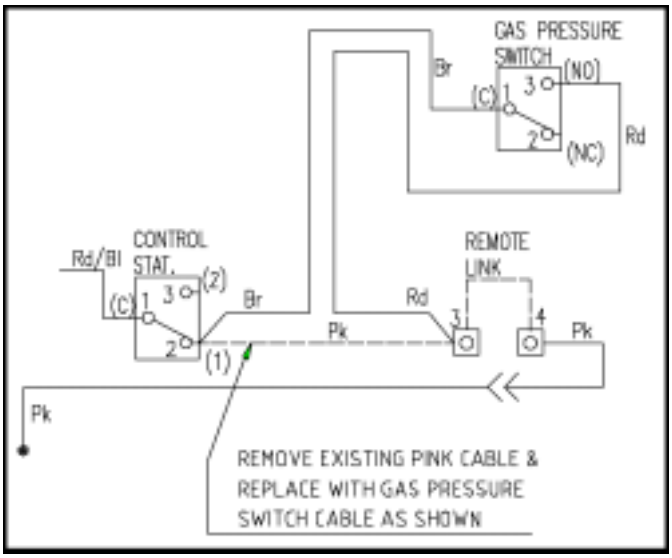

Gas Pressure Switch Adjustment

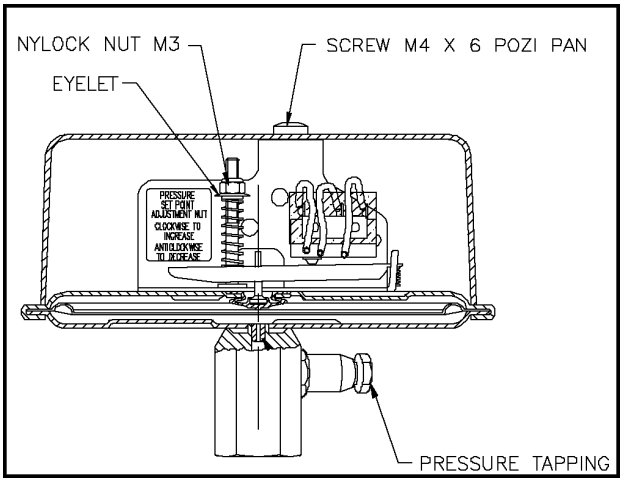

With the cover removed, turn the M3 nut clockwise to increase the set point and vice-versa. Seal the adjuster after setting.

15.0 RECOMMENDED SPARES

MECHANICAL ITEMS **PART No.**

Pilot Injector - Propane.....331101850
(marked 0.23P)
Low Gas Pressure Switch..... 339009477

THIS PAGE LEFT INTENTIONALLY BLANK

Hamworthy Heating Accredited Agents

Central & South West England

Driver Engineering Limited
778 Wimborne Road, Moordown
Bournemouth BH9 2DX
Tel: 01202 525140
Fax: 01202 536442

Scotland

McDowall Modular Services
97a Hawthorn Street
Glasgow G22 6JD
Tel: 0141 336 8795
Fax: 0141 336 8954

North West England

Gillies Modular Services
210-218 New Chester Road
Birkenhead
Merseyside L41 9BG
Tel: 0151 666 1030
Fax: 0151 647 8101

Northern Ireland

McCaig Collim Limited
92-94 Dargan Crescent
Duncrue Industrial Estate
Belfast BT3 9JP
Tel: 01232 777788
Fax: 01232 776865

North East England

Allison Heating Products
17 Beach Road
South Shields
Tyne & Wear NE33 2QH
Tel: 0191 455 7898
Fax: 0191 455 7899

Southern Ireland

HEVAC Limited
70-72 Lower Dorset Street
Dublin 1, Ireland
Tel: 003531 830 1211
Fax: 003531 830 1990

For all other areas, or for further advice, please contact Hamworthy Heating head office service department in Poole, telephone 01202 662500.

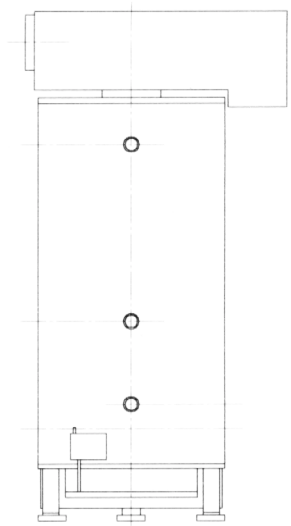

Hamworthy Heating

Connect direct for better service

Direct Dial Telephone Numbers

HAMWORTHY
heating products

POOLE OFFICE

HAMWORTHY HEATING LIMITED
Fleets Corner, Poole, Dorset, BH17 0HH. England.
Main Switchboard tel: **01202 662500.**
Customer Services fax: **01202 665111.**

Boilers ∞ controllers ∞ water heaters ∞ pressurisation sets ∞ cold water boosters

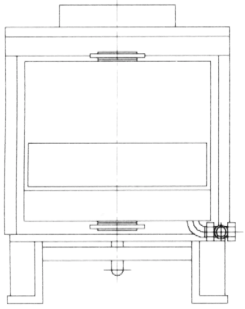

GENERAL ENQUIRIES ..... ☎ 01202 662552

For general enquiries on products and services available from Hamworthy Heating, our Customer Liaison staff are on hand to answer your questions.

QUOTATIONS ..... ☎ 01202 662552

Hamworthy Heating provide an efficient pricing and quotation service. Our Customer Liaison staff will also be pleased to arrange for one of our Sales Engineers or Authorised Sales Agents, to visit you to discuss your needs in person, and offer expert technical and commercial advice on heating, flue and water systems.

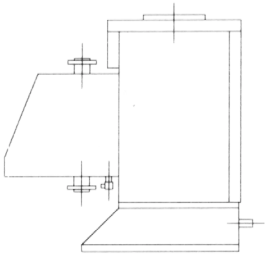

TECHNICAL ENQUIRIES ..... ☎ 01202 662527/662528

For problems of a technical nature and further product support, our Technical Applications Engineers offer specifiers and contractors advice on all aspects of equipment application, configuration and capability.

ORDER ENQUIRIES ..... ☎ 01202 662518

For an efficient response to order acknowledgement and administrative queries, contact our order processing team.

DELIVERY ENQUIRIES ..... ☎ 01202 662515/662504

Deliveries from Hamworthy Heating arrive direct from the factory on a vehicle equipped with a tail-lift for ease of off-loading to ground level. Our contracts team will progress despatch and liaise individual delivery arrangements.

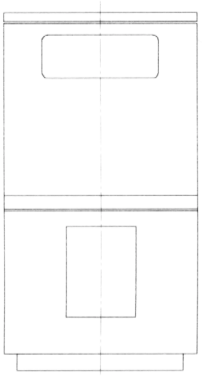

SPARE PARTS ..... ☎ 01202 662525

A comprehensive spare parts service is operated from our factory in Poole, providing replacement parts for both current and discontinued products. Please contact our spares team, providing details of product type, serial number, model and part requirements wherever possible.

SERVICE DEPARTMENT ..... ☎ 01202 662555

At Hamworthy Heating we employ our own skilled service engineers who are trained to work on all of our products. Our National coverage of all UK mainland sites is supported by a network of Authorised Service Agents who can provide the same high level of service and product expertise.

EXPORT ..... ☎ +44 (0)1202 662514

Hamworthy Heating has an expanding global network of distributors and partner companies providing local contact, product and after sales service. This network currently includes Italy, Benelux, Germany, Baltic States, Finland, Russia, Poland, Australia, South Africa, Hong Kong and China.

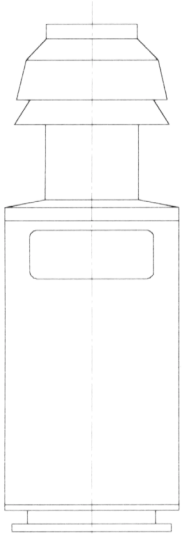

HAMWORTHY
flue products

BIRMINGHAM OFFICE

HAMWORTHY HEATING LIMITED
Shady Lane, Great Barr, Birmingham, B44 9ER
Main Switchboard tel: **0121 360 7000.**
Customer Services fax: **0121 325 0890.**

Flue components ∞ design service ∞ bespoke manufacture ∞ installation

FLUE PRODUCTS (ALL ENQUIRIES) ..... ☎ 0121 360 7000

Our factory in Birmingham offers a comprehensive range of flue products from stock, or alternatively provides a full design and installation service incorporating sizing, site survey and drawings for approval prior to manufacture.

Associate Companies, Offices and Agents throughout the World.

Hamworthy reserves the right to make changes and improvements which may necessitate alteration to the specification without prior notice.