# INSTALLATION & SERVICING MANUAL

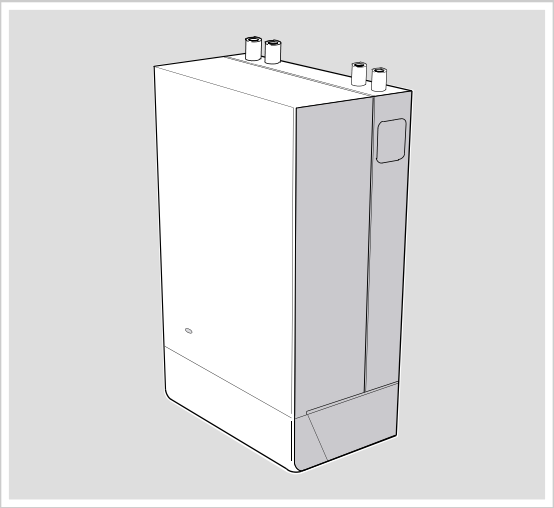

*British/Scottish Gas RD1*

the wall hung boiler

## 30 - 100 RD1

**Wall hung, gas fired fanned flue boiler**

British Gas

Scottish Gas

Installers guide to central heating boilers

# *British Gas:*

**(Any internal reference to British Gas applies equally to Scottish Gas)**

The British Gas RD1 is a range of cast iron wall mounted fanned flue gas central heating boilers. A complete range of natural gas models is available.

## *The ideal replacement boiler...*

Easy to install, easy to operate and easy to service. The British Gas RD1 really is the ultimate replacement wall mounted range - you can depend on it.

## *Proven reliability...*

Proven cast iron heat exchanger engineered and refined to be the most dependable wall mounted boiler ensuring totally calm operation and quiet running, whatever the system demands.

## *Complete range...*

There are 7 models in the range. All models include a Downward Routing Pipe Kit and an overheat thermostat.

## *Full system suitability...*

Most models are suitable for connection to pumped open vent central heating systems, pumped central heating combined with pumped or gravity indirect domestic hot water supply systems. (Note: the 100 model is not suitable for gravity installations). They can also be used on sealed water systems.

## *Free Three Star Service Cover:*

In addition to the guarantee, we will provide absolutely free a British Gas Services Three Star Service Cover agreement to cover your complete new system during the first year. The benefits of this cover include priority attention and a 24 hours a day 365 day a year helpline. Full details of the terms and conditions for Three Star Cover schemes are available separately on request.

# GENERAL

**Table 1 - General Data**

| Boiler Size | | | 30 | 40 | 50 | 60 | 70 | 80 | 100 |
|---|---|---|---|---|---|---|---|---|---|
| Gas supply connection | | (in. BSP) | Rc 1/2 (1/2) 1/2" (BSP Female) | | | | | | |
| Flow connections (Pumped & Gravity) | | mm copper | 22 | | | | 28 Fem | | |
| (Pumped only) | | mm copper | | | | | | | 28 Fem |
| Return connections (Pumped & Gravity) | | mm copper | 22 | | | | 28 Fem | | |
| (Pumped only) | | mm copper | | | | | | | 28 Fem |
| Maximum static water head | | m (ft.) | 30.5 (100) | | | | | | |
| Minimum static water head | | m (ft.) | 0.45 (1.5) | | | | | | |
| Electrical supply | | | 230 V 50 Hz Boiler power consumption; 150W | | | | | | |
| Fuse rating | | | External; 3A Internal; F2A to BS.4265 | | | | | | |
| Water content | | litre (gal.) | 2.7 (0.6) | | 3.65 (0.8) | | 4.65 (1.0) | | 4.65(1.0) |
| Dry Weight | | kg (lb) | 40.9 (90.3) | | 46.6 (102.8) | | 52.6 (116.0) | | 52.6(116) |
| Maximum installation weight | | kg (lb) | 31.4 (69.3) | | 37.4 (82.5) | | 43.1 (95) | | 43.1(95) |
| Boiler size | Height | mm (in.) | 700 (27.5) | | | | | | |
| | Width | mm (in.) | 380 (15.0) | | | | | | |
| | Depth | mm (in.) | 300 (11.8) | | | | | | |
| Flue duct diameter | | mm (in.) | 100 (4.0) | | | | | | |
| Flue duct length (max) | | m (ft) | 3 (9.8) | | | | | 2 (6.6) | 0.6 (2) |

**Table 2 - Performance Data**

| Boiler Size | | | 30 | 40 | 50 | 60 | 70 | 80 | 100 |
|---|---|---|---|---|---|---|---|---|---|
| Boiler input | Nett CV | kW | 9.9 | 13.2 | 16.5 | 19.8 | 23.1 | 26.4 | 33.0 |
| | | Btu/h x 1000 | 33.8 | 45.1 | 56.3 | 67.6 | 78.8 | 90.1 | 112.6 |
| Boiler input | Gross CV | kW | 11.0 | 14.6 | 18.3 | 22.0 | 25.6 | 29.3 | 36.6 |
| | | Btu/h x 1000 | 37.5 | 49.8 | 62.5 | 75.0 | 87.4 | 100.0 | 124.9 |
| Gas consumption | | l/s | 0.28 | 0.38 | 0.48 | 0.57 | 0.66 | 0.76 | 0.95 |
| | | $ft^3/h$ | 35.6 | 48.3 | 61.0 | 72.4 | 83.9 | 96.6 | 120.7 |
| Output | | kW | 8.8 | 11.7 | 14.7 | 17.6 | 20.5 | 23.4 | 29.3 |
| | | Btu/h x 1000 | 30.0 | 40.0 | 50.0 | 60.0 | 70.0 | 80.0 | 100.0 |
| Burner Setting pressure (HOT) | | mbar | 10.3 | 14.0 | 13.5 | 13.7 | 14.1 | 14.0 | 14.5 |
| | | in.w.g. | 4.1 | 5.6 | 5.4 | 5.5 | 5.7 | 5.6 | 5.8 |
| Seasonal efficiency (SEDBUK)* | | Band E | [77.2]% | [76.2]% | [76.7]% | [76.9]% | [77.2]% | [76.5]% | [76.7]% |

* The value is used in the UK Government Standard Assessment Procedure (SAP) for energy rating of dwellings. The test data from which it has been calculated have been certified by BG plc 0087

**Note.** *Gas consumption is calculated using a calorific value of 38.7 MJ/m³ (1038 Btu/ft³) gross or 34.9 MJ/m³ (935 Btu/ft³) nett*

*To obtain the gas consumption at a different calorific value:-*

a. ***FOR l/s*** *- divide the gross heat input (kW) by the gross C.V. of the gas (MJ/m³)*
b. ***FOR ft³/h*** *- divide the gross heat input (Btu/h) by the gross C.V. of the gas (Btu/ft³)*

**CAUTION. To avoid the possibility of injury during the installation, servicing or cleaning of this appliance, care should be taken when handling edges of sheet steel components.**

# *British GasRD1*

B.G. Certified - P.I. No. 87 BL 27

Destination Countries: GB

Natural Gas only Appliance type: $C_{12}$ & $C_{32}$

Data Badge: Top of Controls Support.

| Models | G.C. Appliance No. |
|---|---|
| 30 RD1 | 41 349 77 |
| 40 RD1 | 41 349 76 |
| 50 RD1 | 41 349 75 |
| 60 RD1 | 41 349 74 |
| 70 RD1 | 41 349 73 |
| 80 RD1 | 41 349 72 |
| 100 RD1 | 41 387 52 |

(100 is a type $C_{12}$ appliance only)

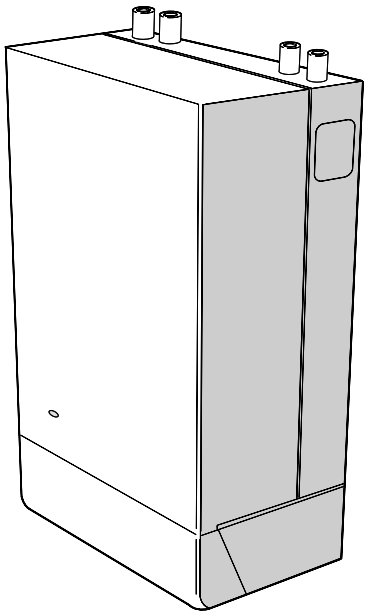

**Key to symbols**

**GB** = United Kingdom (Countries of destination)

**PMS** = Maximum operating pressure of water

**$C_{12}$ & $C_{32}$** =
A room sealed appliance designed for connection via ducts to a horizontal or vertical terminal, which admits fresh air to the burner and discharges the products of combustion to the outside through orifices which, in this case, are concentric. The fan is down stream of the combustion chamber.

**$I_{2H}$** = An appliance designed for use on 2nd Family gas, Group H only.

## CONTENTS


**Air Supply** ..... 7
**Boiler Clearances** ..... 6
**Boiler Exploded View** ..... 12
**Burner Exploded View** ..... 37
**Control Box Exploded View** ..... 38
**Electrical Connections** ..... 21
**Electrical Diagrams** ..... 21-25
**Electrical Supply** ..... 8
**Extension Ducts - Fitting** ..... 20
**External Controls** ..... 22
**Fault Finding** ..... 35
**Flue Installation** ..... 7 & 15
**Gas Safety** ..... 5
**Gas Supply** ..... 7
**Initial Lighting** ..... 26
**Installation** ..... 12
**Mandatory Requirements** ..... 5
**Pump Systems** ..... 9
**Servicing** ..... 28
**Spares Replacement** ..... 30
**Short List of Parts** ..... 36
**System Diagrams (Electrical)** ..... 23-24
**Terminal Guards** ..... 7
**Water connections** ..... 6
**Water and Systems** ..... 9


## BENCHMARK LOG BOOK DETAILS

**Boiler** **Page**

Make and model ..... 4
Appliance Serial No. on Data Badge ..... 12

**Controls** ..... as applicable

**For all boilers**

Flushing to BS.7593 ..... 8
Inhibitor ..... 8
Gas inlet working pressure ..... 7
Burner operating pressure ..... 3
Heat input ..... to be calculated
Temperature differential ..... measure and record

**For combination boilers only** ..... Not applicable
**For domestic hot water mode** ..... Not applicable
**For condensing boilers** ..... Not applicable

**For all boilers:** *complete, sign & hand over to customer*

For assistance see Technical Helpline on the back page

**NOTE TO THE INSTALLER: LEAVE THESE INSTRUCTIONS ADJACENT TO THE GAS METER. ALSO COMPLETE THE BENCHMARK LOG BOOK AND GIVE THIS TO THE CUSTOMER.**

benchmark™

## INTRODUCTION

**The 30-100RD1** is a range of automatically fully controlled, wall mounted, balanced flue, fanned gas boilers.

The heat exchanger is cast iron. The boiler casing is of white enamelled mild steel.

The boiler casing has a removable controls support containing a drop-down door. The boiler thermostat is located behind the drop-down door.

The boilers are suitable for connection to pumped, open vented and sealed central heating systems; pumped central heating combined with pumped or gravity indirect domestic hot water systems; gravity or pumped indirect domestic hot water supply systems.

**Note.**

*The 100 is not suitable for gravity circulation.*

The boilers are supplied with a standard flue kit suitable for rear or side outlet applications from 114 mm (4 1/2") to 600 mm (23 1/2").

### OPTIONAL EXTRA KITS

| | |
|---|---|
| **A Vertex Flue Kit*** | For vertical flue connection |
| **Roof Flue Kit*** | - |
| **90° Flue Elbow Kit*** | - |
| **Sealed System Unit*** | This fits on top of the appliance. |
| **Extension ducts*** | Up to 3m (118") -30 to 80 |
| **Turret Outlet Kit*** | |

*** Not available for 100.**

The diagnostic controls within the boiler are capable of communicating key operational data to a central computer data processing system via the house ring main and public telephone system known as Remote Appliance Diagnostic System (or RADS).

RADS can identify actual failure, or predict imminent failure of components and specify the corrective procedures to the British Gas Service Engineer.
To enable the system to operate, a remote mounted interface (Gateway) is required to receive and transmit data from the boiler.
Without this facility, the boiler operates as standard fanned flued boiler.

### Current GAS SAFETY (Installation and Use) Regulations or rules in force.

It is law that **all** gas appliances are installed by a CORGI registered installer in accordance with the above regulations. Failure to install appliances correctly could lead to prosecution. It is in your own interest, and that of safety, to ensure the law is complied with.

The installation of the boiler MUST also be in accordance with the latest I.E.E (BS.7671) Wiring Regulations, local building regulations, bylaws of the local water authority, the Building Regulations and Building Standards (Scotland) and any relevant requirements of the local authority. Detailed recommendations are contained in the following British Standard Codes of Practice:

| | |
|---|---|
| BS.6891 | Low pressure installation pipes. |
| BS.6798 | Installation of gas fired hot water boilers of rated input not exceeding 60 kW. |
| BS.5449 | Forced circulation hot water systems. |
| BS.5546 | Installation of gas hot water supplies for domestic purposes (2nd Family Gases). |
| BS.7593 | Treatment of water in domestic hot water central heating systems. |
| BS.5440.1 | Flues for gas appliances of rated input not exceeding 70 kW. |
| BS.5440.2 | Ventilation for gas appliances of rated input not exceeding 70 kW. |

Health & Safety Document No. 635

The Electricity at Work Regulations, 1989.

Manufacturer's notes must NOT be taken in any way as overriding statutory obligations.

**IMPORTANT.** These appliances are certificated by the BG Technology Certification Services for safety and performance. It is, therefore, important that no external control devices, e.g. flue dampers, economisers etc., are directly connected to these appliances -unless covered by these Installation and Servicing instructions or otherwise recommended by British Gas Services in writing.
If in doubt please enquire.

Any direct reconnection of a control device not approved by British Gas Services could invalidate the Certification and the normal appliance warranty. It could also infringe the Gas Safety Regulations and the above regulations.

## SAFE HANDLING OF SUBSTANCES

Care should be taken when handling the boiler insulation panels, which can cause irritation to the skin. No asbestos, mercury or CFC's are included in any part of this boiler.

## LOCATION OF BOILER

The boiler must be installed on a flat and vertical wall, capable of adequately supporting the weight of the boiler and any ancillary equipment.

The boiler may be fitted on a combustible wall and insulation between the wall and the boiler is not necessary - unless required by the local authority. **The boiler must not be fitted outside.**

**Timber Framed Buildings**
If the boiler is to be fitted in a timber framed building it should be fitted in accordance with the Institute of Gas Engineers document IGE.UP/7;1998.

**Bathrooms**
The boiler may be installed in any room or internal space, although particular attention is drawn to the requirements of the current I.E.E. (BS.7671) Wiring Regulations and, in Scotland, the electrical provisions of the building regulations applicable in Scotland with respect to the installation of the boiler in a room or internal space containing a bath or shower.

Where a room-sealed appliance is installed in a room containing a bath or shower then the appliance and any electrical switch or appliance control utilising mains electricity should be so situated that it cannot be touched by a person using the bath or shower.

Where installation will be in an unusual location, special procedures may be necessary and BS.6798 gives detailed guidance on this aspect.

## 1 BOILER WATER CONNECTIONS

**This appliance is NOT suitable for use in a direct hot water system.**

1. If the boiler is to be used for gravity domestic hot water supply then cut off the spun ends of the gravity flow and return pipes and fit the 22 mm to 28 mm copper compression fittings (provided in the Hardware Pack) at the boiler gravity flow and return connections, in order to run the gravity circuits in 28 mm pipe. **Note.** *The 100 is not suitable for gravity circulation.*
2. **70 to 100 ONLY**
   must be fitted with the 22mm x 28mm copper compression fittings, provided in the Hardware Pack and the pumped flow and return pipes run in 28mm pipe.
3. The boiler is suitable for use on a sealed system. An Overheat Thermostat is fitted as standard.

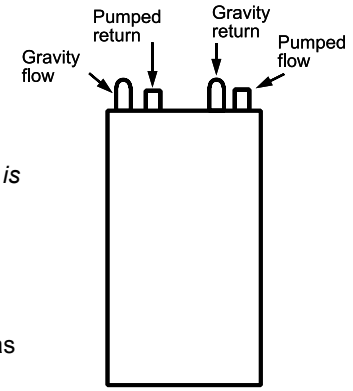


## 2 BOILER CLEARANCES

The following minimum clearances must be maintained for servicing. Additional space will be required for installation, depending upon site conditions.

**Side and Rear Flue**

**a.** Provided that the flue hole is cut accurately, e.g. with a core drill, the flue can be installed from inside the building.
**Installation from inside ONLY**

**b.** If a core boring tool is to be used inside the building; the space in which the boiler is to be installed must be at least wide enough to accommodate the tool.

**c.** If using the Complete Sealed System Unit then refer to the instructions packed with the unit for the necessary clearances.

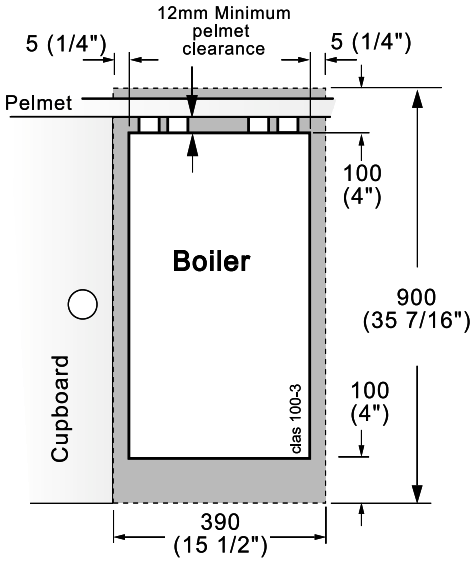


Front clearance: 533mm (21") from the front of the boiler casing.

Minimum front clearance when built in to cupboard is 75 mm (3").

**Pelmet restrictions.**

If the ability to fit or remove the casing during installation and subsequent servicing is impaired by pelmets etc. this operation can be made easier by first removing the controls support casing in line with the following instructions:

**a.** Release the controls pod casing fixing screws (a) 3 full turns only. Remove the support by pulling it forward to disengage from the keyhole slots.

**b.** Undo the 2 screws (b) retaining casing to the back panel.

**c.** The casing can now be removed in the direction of the arrow, first lifting the casing slightly to disengage the casing top return from the back panel. (For this purpose a minimum clearance of 12mm is required between the top of the boiler and pelmet or other similar obstruction.

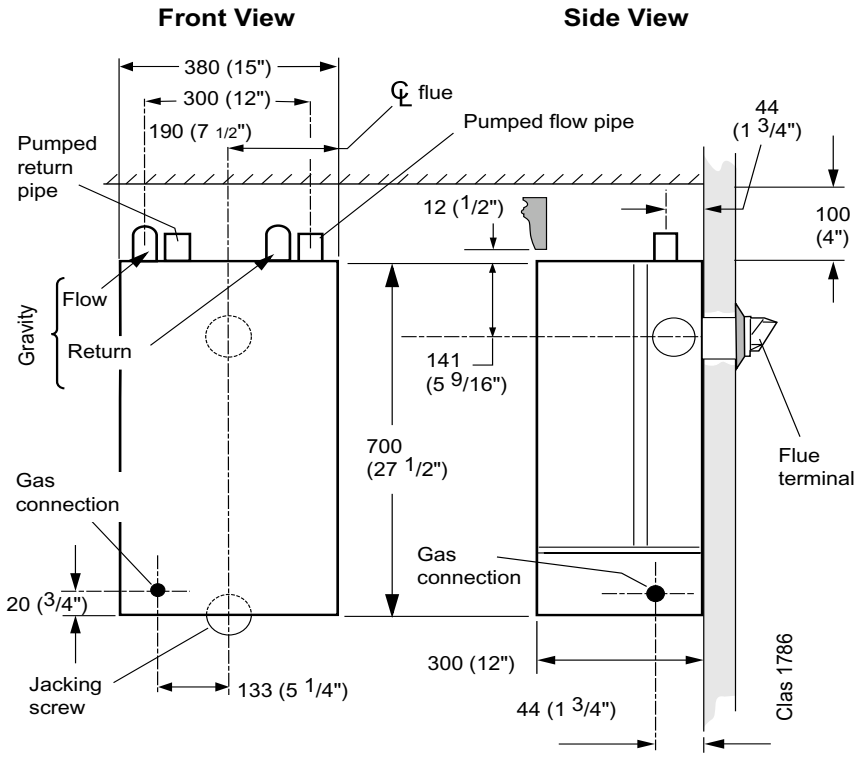


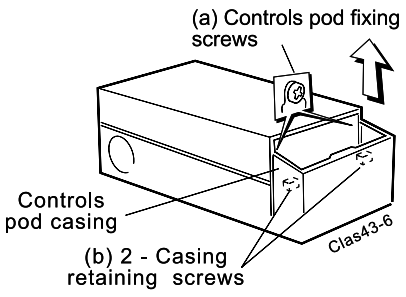

**Compartment Installations**
A compartment used to enclose the boiler MUST be designed and constructed specially for this purpose.
An existing cupboard or compartment may be used, provided it is modified for the purpose.

In both cases details of essential features of cupboards/ compartment design, including airing cupboard installation, are to conform to the following :

- BS. 6798.
- The position selected for installation MUST allow adequate space for servicing in front of the boiler and for air circulation around the boiler. Refer to 'Air Supply' on page 8.
- For the minimum clearances required for safety and subsequent service refer to the Wall mounting diagram, Frame 2. In addition, sufficient space may be required to allow lifting access to the wall mounting plate.

## GAS SUPPLY

The local gas supplier should be consulted, at the installation planning stage, in order to establish the availability of an adequate supply of gas. An existing service pipe must NOT be used without prior consultation with the local gas supplier.

The boiler is to be installed only on a gas supply with a governed meter.

A gas meter can only be connected by the local gas supplier or by a local regional contractor.

An existing meter should be checked, preferably by the gas supplier, to ensure that the meter is adequate to deal with the rate of gas supply required. A MINIMUM pressure of 20 mbar MUST be available at the boiler inlet with the boiler operating.

Installation pipes MUST be fitted in accordance with BS. 6891. Pipework from the meter to the boiler MUST be of an adequate size.100 models should be piped in 22mm minimum. The final 1metre may be run in 15mm if it is visible.

The complete installation MUST be tested for gas soundness and purged as described in the above code.

## FLUE INSTALLATION

The flue must be installed in accordance with the recommendations of BS. 5440:1.

The following notes are intended for general guidance:-

1. The boiler MUST be installed so that the terminal is exposed to external air.
2. It is important that the position of the terminal allows the free passage of air across it at all times.
3. Minimum acceptable spacing from the terminal to obstructions and ventilation openings are specified in Table 3.
4. Where the lowest part of the terminal is fitted less than 2m (6'6") above a balcony, above ground or above a flat roof to which people have access then the terminal MUST be protected by a purpose designed guard.

   Terminals guards are available from boiler suppliers - ask for Tower Flue Guard, Model K1.
   In case of difficulty seek advice from:

   Tower Flue Components Ltd.,
   Vale Rise, Tonbridge, Kent TN9 1TB (Model K1)
   Telephone No. 01732 351 555

   Ensure that the guard is fitted centrally.

**Table 3 - Balanced flue terminal position**

| Terminal Position | Minimum Spacing |
|---|---|
| **1.** Directly below or alongside an opening window, air vent or other ventilation opening | 300 mm (12") |
| **2.** Below guttering, drain pipes or soil pipes | 75 mm ( 3") |
| **3.** Below eaves | 200 mm ( 8") |
| **4.** Below balconies or a car port roof | 200 mm ( 8") |
| **5.** From vertical drain pipes or soil pipes | 75 mm ( 3") |
| **6.** From internal or external corners | 300 mm ( 12") |
| **7.** Above adjacent ground, roof or balcony level | 300 mm (12") |
| **8.** From a surface facing the terminal | 600 mm (24") |
| **9.** From a terminal facing a terminal | 1200 mm (48") |
| **10.** From an opening in a car port (e.g. door or window) into dwelling | 1200 mm (48") |
| **11.** Vertically from a terminal on the same wall | 1500 mm (60") |
| **12.** Horizontally from a terminal on the wall | 300 mm (12") |

5. Where the terminal is fitted within 1000mm (39 1/2") of a plastic or painted gutter or 500mm (19 1/2") of painted eaves then an aluminium shield at least 1000mm (39 1/2") long should be fitted to the underside of the gutter or painted surface.
6. The air inlet/products outlet duct and the terminal of the boiler MUST NOT be closer than 25mm (1") to combustible material. Detailed recommendations on the protection of combustible material are given in BS.5440: 1990.

**IMPORTANT**. It is absolutely ESSENTIAL to ensure, in practice, that products of combustion discharging from the terminal cannot re-enter the building or any other adjacent building through ventilators, windows, doors, other sources of natural air infiltration, or forced ventilation/air conditioning.

If this should occur, the appliance MUST be turned OFF, labelled 'unsafe' and corrective action taken.

## TERMINAL

The terminal assembly can be adapted to accommodate various wall thicknesses. Refer to Frame 9.

## AIR SUPPLY

Detailed recommendations for air supply are given in BS.5440:2. The following notes are for general guidance:

1. It is NOT necessary to have a purpose provided air vent in the room or internal space in which the boiler is installed.
2. If the boiler is to be installed in a cupboard or compartment, permanent air vents are required (for cooling purposes) in

the cupboard/compartment, at both high and low levels. The air vents must either communicate with room/internal space, or be direct to outside air. The minimum effective areas of the permanent air vents, required in the cupboard/compartment, are specified as follows and are related to maximum rated heat input.

3. Both air vents MUST communicate with the same room or internal space or MUST be on the same wall to outside air.
4. In siting the air vents care must be taken to avoid the freezing of pipework.

**Table 4 - High and low vent areas**

| Boiler | Air from room/internal space, cm (in$^2$ ) | | Air direct from outside, cm (in$^2$) | |
|---|---|---|---|---|
| 30 | 102 | (16) | 51 | (8) |
| 40 | 135 | (21) | 68 | (11) |
| 50 | 170 | (26) | 83 | (13) |
| 60 | 198 | (31) | 102 | (16) |
| 70 | 231 | (36) | 116 | (18) |
| 80 | 264 | (41) | 132 | (21) |
| 100 | 340 | (52) | 170 | (26) |

## WATER CIRCULATION SYSTEM

The boiler must NOT be used for direct hot water supply. For the types of system and correct piping procedure refer to 'Introduction' and Frame 1.

The central heating system should be in accordance with BS.6798 and, in addition, for Smallbore and Microbore systems, BS. 5449.

The domestic hot water system, if applicable, should be in accordance with the relevant recommendations of BS. 5546. Copper tubing to BS. 2871:1 is recommended for water carrying pipework.

The hot water storage cylinder MUST be of the indirect type and should preferably be manufactured of copper.

Single feed, indirect cylinders are not recommended and MUST NOT be used on sealed systems.

The hot water cylinder and ancillary pipework, not forming part of the useful heating surface, should be lagged to prevent heat loss and any possible freezing - particularly where pipes run through roof spaces and ventilated under floor spaces.

Boilers not fitted to a sealed system must be vented.

## IMPORTANT

Draining taps MUST be located in accessible positions, which permit the draining of the whole system - including the boiler and hot water storage vessel. They should be at least 1/2" BSP nominal size and be in accordance with BS. 2879.

The boiler is fitted with a special drain plug, which is provided, to drain the BOILER ONLY, in the event of the system drain plug being unable to do so. The hydraulic resistance of the boilers, at MAXIMUM OUTPUT with 11°C (20°F) temperature differential, are shown in Table 5.

**Table 5 - Water flow rate and pressure loss**

| Boiler Size | | 30 | 40 | 50 | 60 | 70 | 80 | 100 |
|---|---|---|---|---|---|---|---|---|
| Pressure | kPa | 2.2 | 2.07 | 3.15 | 4.17 | 5.49 | 7.74 | 10.62 |
| Loss | m | 0.23 | 0.21 | 0.32 | 0.42 | 0.56 | 0.79 | 1.08 |
| | ft | 0.74 | 0.69 | 1.05 | 1.39 | 1.83 | 2.58 | 3.54 |

Maximum boiler operating temperature should be 82°C (180°F).

## WATER TREATMENT

These boilers incorporate a cast iron heat exchanger. As part of the installation the central heating system should be thoroughly flushed with appropriate water treatment in order to comply with BS7593:1992.

**British Gas Services** recommend the use of Fernox or Betz Dearborn water treatment products which must be used in accordance with the manufacturers instructions. For further information contact :-
**Fernox Manufacturing. Co. Ltd**, Tandem House, Marlowe Way, Croydon, Surrey CRO 4XS, tel 0870 5601 5000 or
**Betz Dearborn Ltd**, Widnes, Cheshire, tel. 0151 424 5351

**IMPORTANT.** Any other treatment for this product may render the guarantee of British Gas Services INVALID.

**Notes.**

1. *If an inhibitor is used, and in hard water areas where treatment to prevent lime deposits is necessary, it is most important that the water treatment MUST be maintained at the correct concentrations recommended by the treatment manufacturer.*
2. *Artificially softened water must not be used in the system, under any circumstances.*

## THERMOSTATIC RADIATOR VALVES

**British Gas Services** recommend that heating systems utilising full thermostatic radiator valve control of temperature in individual rooms should also be fitted with a room thermostat controlling the temperature in a space served by radiators not fitted with such a valve as stated in BS. 5449.

When thermostatic radiator valves are used, the space heating temperature control over a living / dining area or hallway having a heating requirement of at least 10% of the boiler heat output should be achieved using a room thermostat, whilst other rooms are individually controlled by thermostatic radiator valves. However, if the system employs thermostatic radiator valves on all radiators, or two port valves without end switches, then a bypass must be fitted to ensure a flow of water should all valves be in the closed position.

## ELECTRICAL SUPPLY

***WARNING.***

The appliance MUST be efficiently earthed.

Wiring external to the appliance MUST be in accordance with the current I.E.E. (BS.7671) Wiring Regulations and any local regulations which apply.

The point of connection to the mains should be readily accessible and adjacent to the boiler, except that for bathroom installations; the point of connection to the mains MUST be situated outside of the bathroom.

**Note.**
*Where a room sealed appliance is installed in a room containing a bath or shower then the appliance and any electrical switch or appliance control utilising mains electricity should be so situated that it cannot be touched by a person using the bath or shower. See Frame 28 for details.*

## 3 OPEN VENT SYSTEM REQUIREMENTS - FULLY PUMPED.

The system should be vented directly off the boiler flow pipe, as close to the boiler as possible. The cold feed entry should be inverted and MUST be positioned between the pump and the vent, and not more than 150mm (6") away from the vent connection.

There should be a minimum height - 450mm (18") - of open vent above cistern water level. If this is impossible refer below.

The vertical distance between the highest point of the system and the feed/expansion cistern water level MUST not be less than 450mm (18").

The pump MUST be fitted on the flow side of the boiler.

A suitable pump is a domestic circulator capable of providing an 11°C (20°F) temperature differential (e.g. Grunfos UPS 15/50 or equivalent). The vertical distance between the pump and feed/expansion cistern MUST comply with the pump manufacturers minimum requirements to avoid cavitation. Should these conditions not apply, either lower the pump position or raise the cistern above the minimum requirement specified by **British Gas Services.**

**Note.** *A cold water feed must be available back to the boiler, when all automatic valves are in the closed position (refer to BS. 6798) and when close coupled the feed must not be in a vertical leg.*

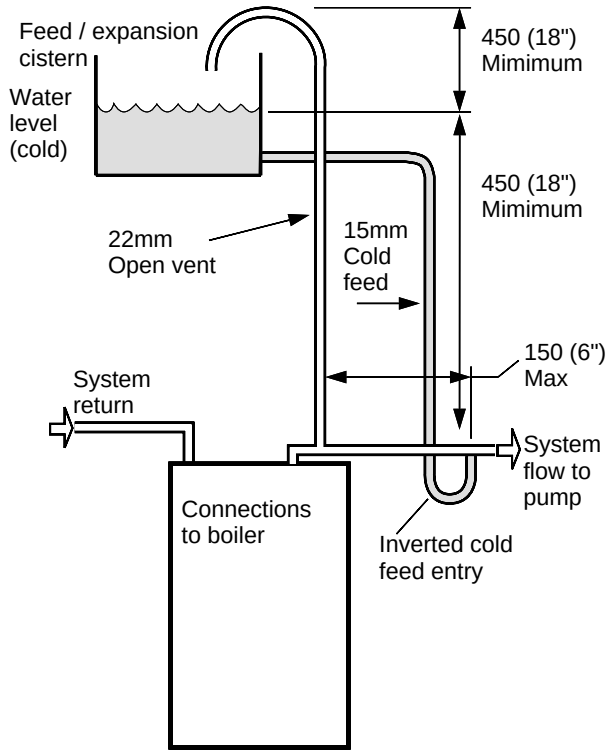


## 4 LOW HEAD INSTALLATIONS

The range of boilers can be installed in low head situations by fitting a 'surge arrester' in the expansion pipe as shown.

The following conditions MUST be observed:

1. The surge arrester must be at least 42mm in diameter x 150mm long, thus ensuring a MINIMUM air gap and a MINIMUM depth of water below the static water level (cold) of 75mm.
2. The static water level (cold) must be at least 200mm above the top of the horizontal flow pipe, fitted as shown. The vent connection MUST NOT be made immediately off the top of the boiler, as venting is made less efficient.
3. The maximum practical length of 15mm cold feed pipe should be used in order to reduce the effective volume of system water expanding into the feed/expansion cistern to a minimum.

**Note.** *The pump manufacturers minimum requirements must be complied with*

**Minimum Requirements**

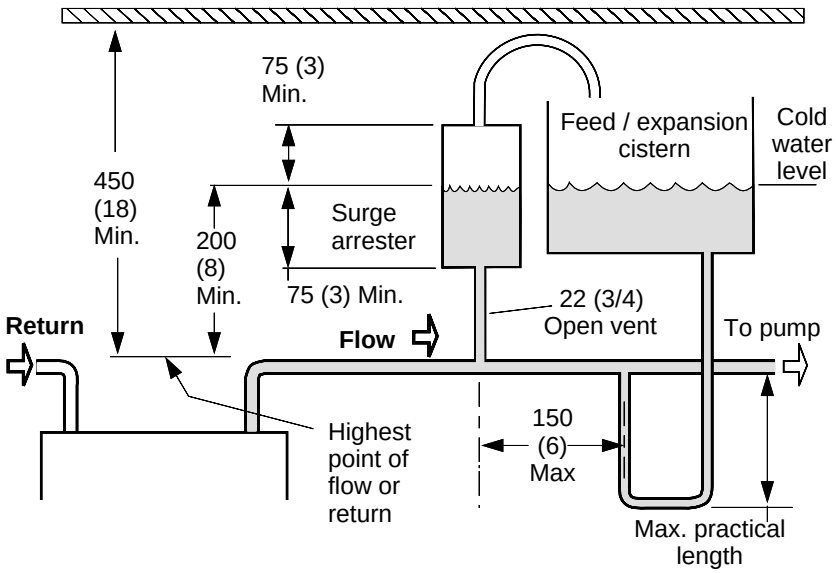


All dimensions in mm (in.). **N.B.** Imperial dimensions are approximate

## 5 SEALED SYSTEM REQUIREMENTS

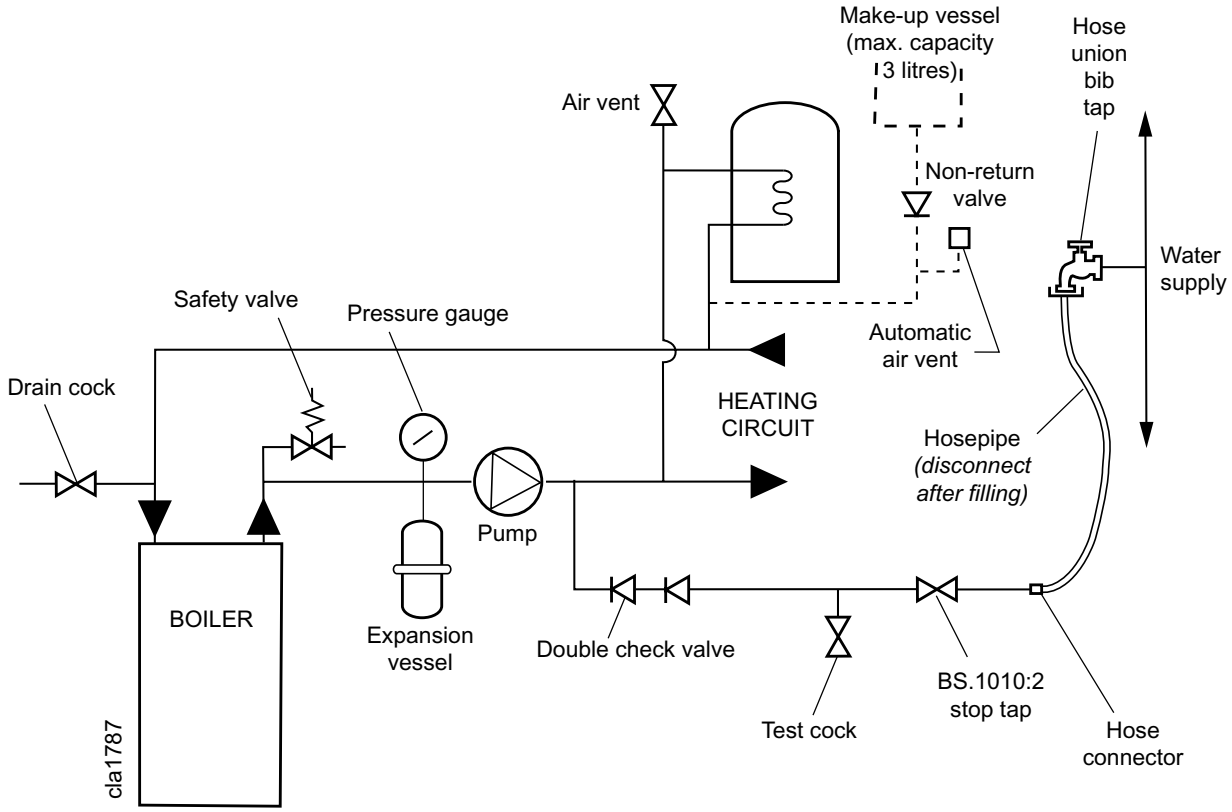


**Note.**

*The method of filling, refilling, topping up or flushing sealed primary hot water circuits from the mains via a temporary hose connection is only allowed if acceptable to the local water authority.*

1. **General**
   - **a.** The installation must comply with the requirements of BS.6798 and BS.5449.
   - **b.** The installation should be designed to work with flow temperatures of up to 82°C.
   - **c.** All components of the system, including the heat exchanger of the indirect cylinder, must be suitable for a working pressure of 3 bar (45 lb/in²) and temperature of 110°C. Care should be taken in making all connections so that the risk of leakage is minimised.
2. **Safety Valve**

   A spring loaded safety valve complying with the relevant requirements of BS.6759 must be fitted in the flow pipe, as close to the boiler as possible and with no intervening valve or restriction. The valve should have the following features:
   - **a.** A non-adjustable pre-set lift pressure not exceeding 3 bar (45 lb./in²)
   - **b.** A manual testing device.
   - **c.** Provision for connection of a discharge pipe. *The valve or discharge pipe should be positioned so that the discharge of water or steam cannot create a hazard to the occupants of the premises or cause damage to electrical components and wiring.*
3. **Pressure Gauge**

   A pressure gauge covering at least the range 0-4 bar (0-60 lb./in²) must be fitted to the system. The gauge should be easily seen from the filling point and should preferably be connected at the same point as the expansion vessel.
4. **Expansion Vessel**
   - **a.** A diaphragm type expansion vessel must be connected at a point close to the inlet side of the pump, the connecting pipe being not less than 15mm (1/2" nominal) size and not incorporating valves of any sort.
   - **b.** The vessel capacity must be adequate to accept the expansion of the system water when heated to 110°C (230°F)
   - **c.** The charge pressure must not be less than the static water head above the vessel The pressure attained in the system when heated to 110°C (230°F) should be at least 0.35 bar (5lb/in²) less than the lift pressure of the safety valve.

   For guidance on vessel sizing refer to the table in Frame 6. For further details refer to BS.5449 and the British Gas Corporation publication : Material and Installation Specifications for Domestic Central Heating & Hot Water.
5. **Cylinder**

   The cylinder must be either of the indirect coil type or a direct cylinder fitted with an immersion calorifier which is suitable for operating on a gauge pressure of 0.35 bar (5lb./in²) in excess of the safety valve setting. *Single feed indirect cylinders are not suitable for sealed systems.*
6. **Make-up Water**

   Provision must be made for replacing water loss from the system, either:
   - **a.** From a manually fitted make-up vessel with a readily visible water level. The vessel should be mounted at least 150mm (6") above the highest point of the system and be connected through a non-return valve to the system, fitted at least 300mm (12") below the make-up vessel on the return side of the domestic hot water cylinder or radiators.

## 6 SEALED SYSTEM REQUIREMENTS - cont.

**b.** Where access to a make-up vessel would be difficult by pre-pressurisation of the system. Refer to 'Filling.'

**7. Mains Connection**

There must be no direct connection to the mains water supply or to the water storage tank supplying domestic water, even through a non-return valve, without the approval of the local water authority.

**8. Filling**

The system may be filled by one of the following methods:

**a.** Through a cistern, used for no other purposes, via a ball valve permanently connected directly to a service pipe and / or a cold water distributing pipe.

The static head available from the cistern should be adequate to provide the desired initial system design pressure. The cold feed pipe from the cistern should include a non-return valve and a stop valve with an automatic air vent connected between them, the stop valve being located between the system and the automatic air vent. The stop valve may remain open during normal operation of the system if automatic water make-up is required.

**b.** Through a self-contained unit comprising a cistern, pressure booster pump (if required) and, if necessary, an automatic pressure reducing valve and flow restrictor. The cistern should be supplied through a temporary connection from a service pipe or cold water distributing pipe.

This unit may remain permanently connected to the heating system to provide limited automatic water make-up. Where the temporary connection is supplied from a service pipe or distributing pipe which also supplies other draw-off points at a lower level then a double check valve shall be installed upstream of the draw-off point.

**c.** Through a temporary hose connection from a draw-off tap supplied from a service pipe under mains pressure. Where the mains pressure is excessive a pressure-reducing valve shall be used to facilitate filling.

The following fittings shall form a permanent part of the system and shall be fitted in the order stated:

A stop valve complying with the requirements of BS. 1010, Part 2 (the hose from the draw-off tap shall be connected to this fitting).

A test cock.

A double check valve of an approved type.

- Thoroughly flush out the whole of the system with cold water, without the pump in position.
- With the pump fitted, fill and vent the system until the pressure gauge registers 1.5 bar (21.5lb/in$^2$).

  Examine for leaks.
- Check the operation of the safety valve by manually raising the water pressure until the valve lifts. This should occur within ± 0.3 bar (± 4.3lb/in$^2$) of the pre-set lift pressure.
- Release water from the system until the initial system design pressure is reached.
- Light the boiler and heat the system to the maximum working temperature. Examine for leaks.
- Turn off the boiler and drain the system while still hot.
- Refill and vent the system.

**Sizing procedure for expansion vessels:** The volume of the expansion vessel (litres) fitted to a sealed system shall not be less than that given by the table below, multiplied by a factor of 0.8 (for flow temperatures of less than 88 °C).

| **Safety valve setting** | **3.0 bar** | | | **2.5 bar** | | | **2.0 bar** | |
|---|---|---|---|---|---|---|---|---|
| **Vessel charge and initial system pressure** | 0.5 bar | 1.0 bar | 1.5 bar | 0.5 bar | 1.0 bar | 1.5 bar | 0.5 bar | 1.0 bar |
| **Total water content of system (litres)** | **Expansion vessel volume (litres)** | | | | | | | |
| **25** | 2.1 | 2.7 | 3.9 | 2.3 | 3.3 | 5.9 | 2.8 | 5.0 |
| **50** | 4.2 | 5.4 | 7.8 | 4.7 | 6.7 | 11.8 | 5.6 | 10.0 |
| **75** | 6.3 | 8.2 | 11.7 | 7.0 | 10.0 | 17.7 | 8.4 | 15.0 |
| **100** | 8.3 | 10.9 | 15.6 | 9.4 | 13.4 | 23.7 | 11.3 | 20.0 |
| **125** | 10.4 | 13.6 | 19.5 | 11.7 | 16.7 | 29.6 | 14.1 | 25.0 |
| **150** | 12.5 | 16.3 | 23.4 | 14.1 | 20.1 | 35.5 | 16.9 | 30.0 |
| **175** | 14.6 | 19.1 | 27.3 | 16.4 | 23.4 | 41.4 | 19.7 | 35.0 |
| **200** | 16.7 | 21.8 | 31.2 | 18.8 | 26.8 | 47.4 | 22.6 | 40.0 |
| **225** | 18.7 | 24.5 | 35.1 | 21.1 | 30.1 | 53.3 | 25.4 | 45.0 |
| **250** | 20.8 | 27.2 | 39.0 | 23.5 | 33.5 | 59.2 | 28.2 | 50.0 |
| **275** | 22.9 | 30.0 | 42.9 | 25.8 | 36.8 | 65.1 | 31.0 | 55.0 |
| **300** | 25.0 | 32.7 | 46.8 | 28.2 | 40.2 | 71.1 | 33.9 | 60.0 |
| **Multiplying factors for other system volumes** | 0.0833 | 0.109 | 0.156 | 0.094 | 0.134 | 0.237 | 0.113 | 0.20 |

## 7 REQUIREMENTS FOR CORRECT GRAVITY HOT WATER PERFORMANCE

**Note.** *Gravity horizontal pipes should be ABOVE ceiling level and as SHORT as possible. A MINIMUM inclination of 25mm per 3m run (1" per 10') is required to avoid air locks. If these conditions cannot be met, pumped primaries MUST be used.*

*The 100 is not suitable for gravity circulation.*

The graph assumes 8 elbows in the gravity circuit. For each elbow in excess of 8, (R) must be reduced by 300 mm (12 in.) or (H) increased by 100 mm (4 in.)

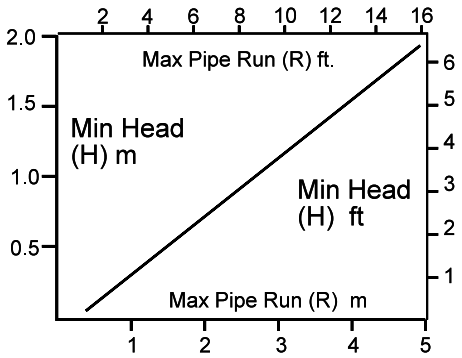


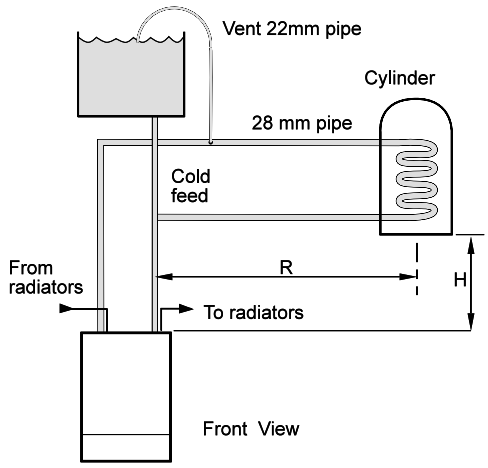


## 8 BOILER ASSEMBLY - Exploded view 30 shown

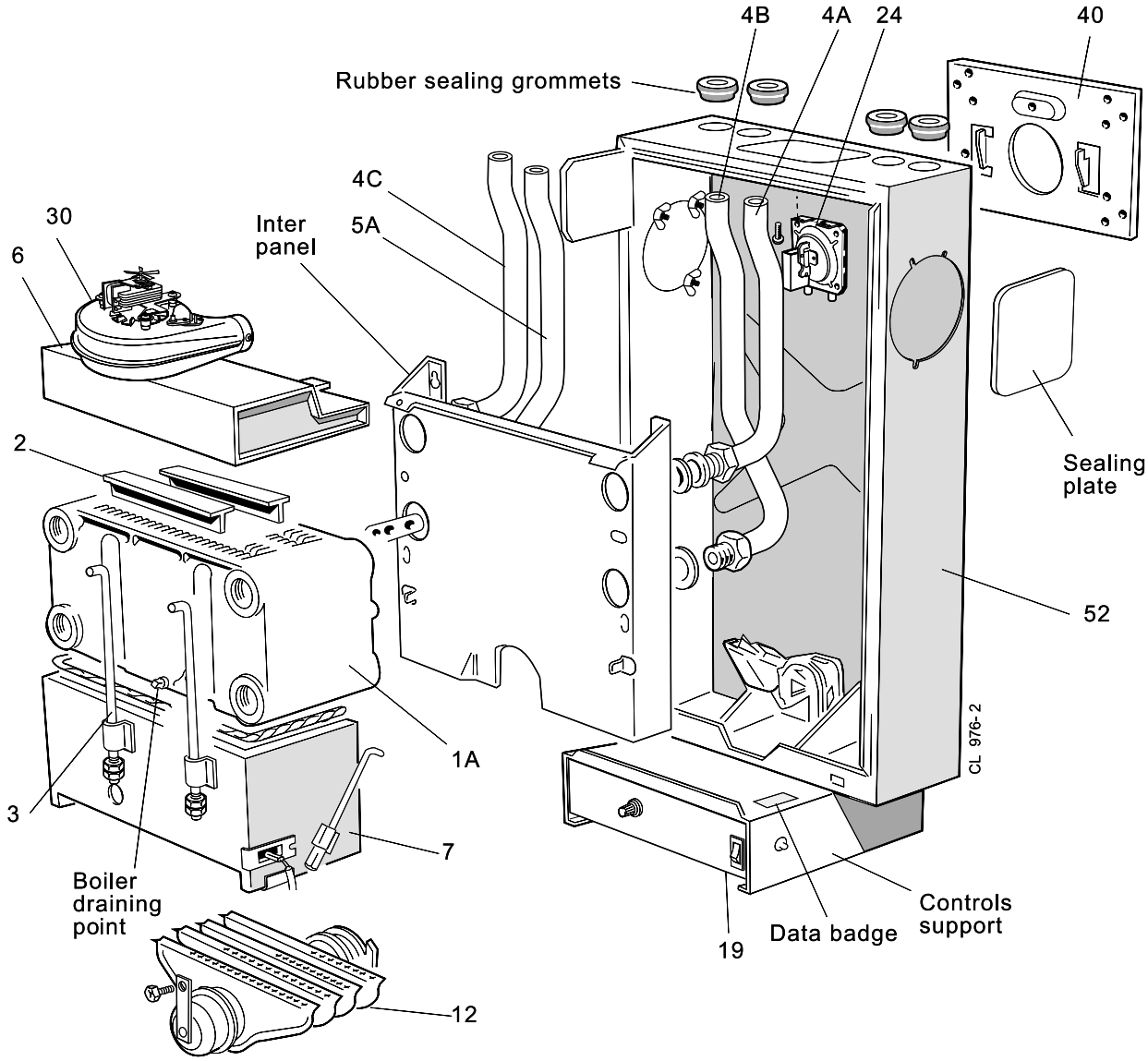


**LEGEND**

**1A.** Heat exchanger.
**2.** Flue baffles.
**3.** Tie rods.
**4A.** Pumped flow pipe.
**4B.** Gravity return pipe.
**4C.** Gravity flow pipe.
**5A.** Pumped return pipe.
**6.** Collector hood assembly.
**7.** Combustion chamber.
**12.** Main burner.
**19.** Control box .
**24.** Pressure switch.
**30.** Fan.
**40.** Wall mounting plate.
**52.** Back panel.

## 9 UNPACKING

The boiler is supplied fully assembled in **Pack A,** together with a standard flue assembly for lengths up to 600mm (23 1/2"), rear or side flue outlet, in **Pack B.**

Unpack and check the contents.

**Pack A Contents**

- The complete boiler.
- Installation & Servicing Instructions.
- User's Instructions.
- Hardware Pack (listed below).
- Wall mounting template.
- Wall mounting plate.
- Side outlet terminal mounting plate.
- Flue extension tube.
- Boiler sealing ring.
- Flue elbow.
- Downward routing pipe kit.

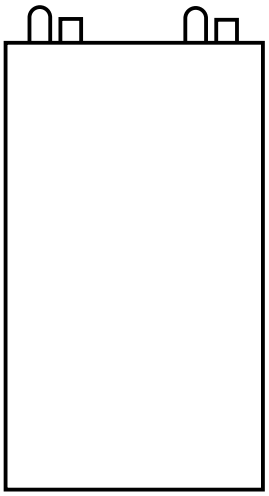

Complete boiler

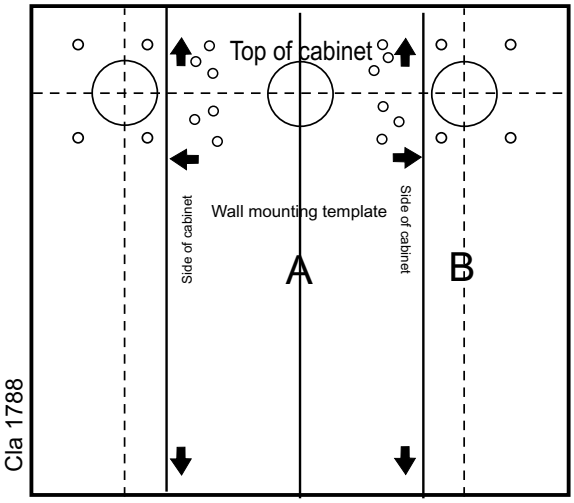


Wall mounting template

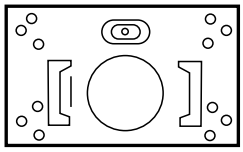

Wall mounting plate

**Boiler Hardware Pack Contents**

- 50mm x No. 14 wood screw, 4 off.
- 50mm x No. 10 wood screw, 8 off.
- Wall plug , 12 off.
- M8 washer, 1 off.
- Sealing plate, 1 off
- M5 wing nut, 3 off
- M8 x 12 Hx. Hd. screw, 1 off.
- British Gas Logo, 1 off.
- Scottish Gas Logo, 1 off.
- Bar clamp, 1 off.
- M3 x 16 screw, 2 off.

- **30-60 RD1 only**
  22mm straight coupler compression fittings -2 off. For connection to the boiler PUMPED flow and return pipes 28mm x 22mm reducing coupler compression fittings - 2 off. For connection to the boiler GRAVITY flow and return pipes.

- **70-100 RD1 only**
  28mm x 22mm reducing coupler compression fittings -4 off. For connection to the boiler PUMPED AND GRAVITY flow and return pipes.
  **Note.** *The 100 RD1 is not suitable for gravity systems.*

**Flue Pack B Contents**

- Duct cutting support, 2 off (cardboard )
- Terminal wall plate, 1 off.
- Terminal grille assy., 1 off.
- Polyurethane foam seal 400 lg., 1 off.
- No. 8 x 8 lg. Pozi pan hd. screws, 3 off.

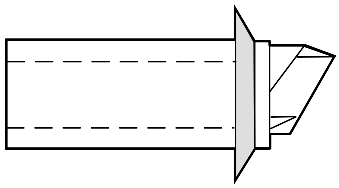

Flue terminal

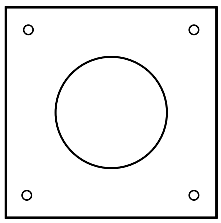

Terminal wall plate

## 10 PACKAGING AND CASING REMOVAL

1. Unpack the boiler.
2. Remove the casing as follows and place to one side to avoid damage.
   a. Undo the 2 casing screws (a) retaining the casing to the back panel.
   b. Swing the bottom of the boiler casing up until the controls support casing has cleared the controls then unhook the top from the back panel.
3. Remove the boiler from its packaging base. The boiler may now be stood upright on its controls support protection frame to ease handling and installation.
4. Unpack the boiler terminal box and, if applicable, the extension flue box(es).

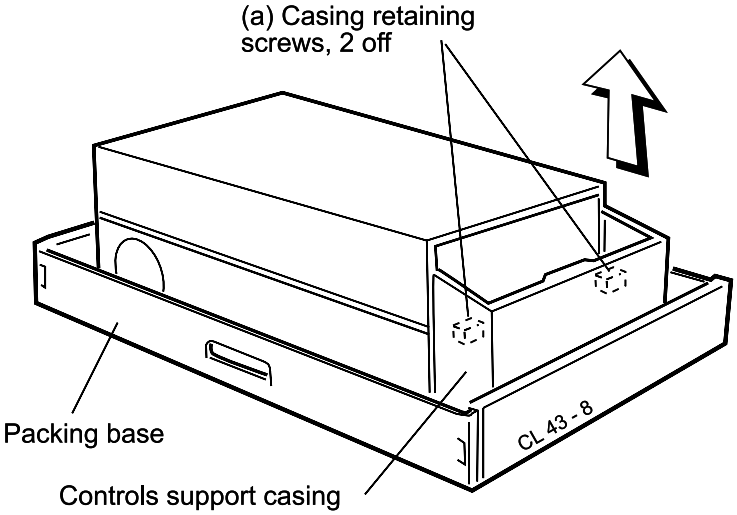


## 11 DOWNWARD ROUTING PIPE KIT

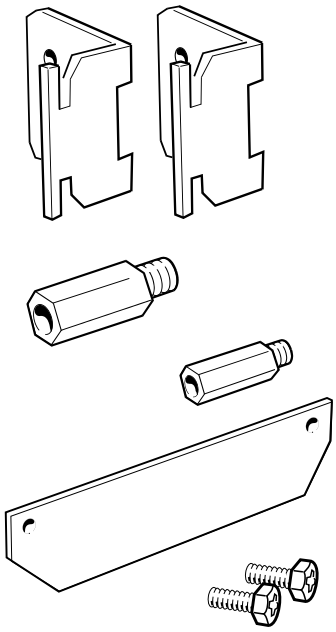

Cla 1379

| Product | Qty |
|---|---|
| Downward pipe routing bracket | 2 off |
| M8 Spacing pillar | 1 off |
| M5 Spacing pillar | 1 off |
| Panel rear assembly | 1 off |
| M5 x 10 Pozi hex. hd. | 2 off |

1. If it is intended to route the flow and return pipe work downwards between the back of the boiler and the wall the downward pipe routing kit must be fitted before proceeding further.
2. Prepare the boiler for installation according to the Installation and Servicing book, Frames 1-8.
3. Screw the panel rear assembly (supplied in the kit) to the back of the boiler controls compartment.
4. Proceed with the installation with particular reference to Frames 12, 15, 16, 18, 22 and 23.

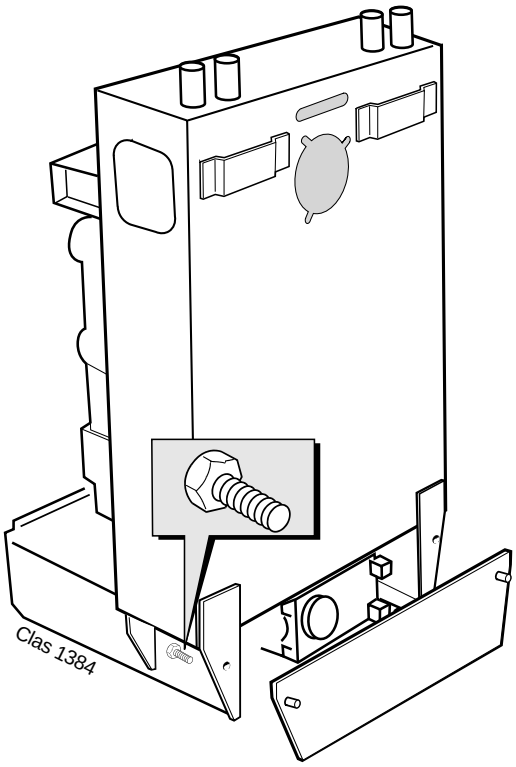

## 12 DETERMINING THE FLUE LENGTH

*It is MOST IMPORTANT that the boiler is installed in a vertical position.*

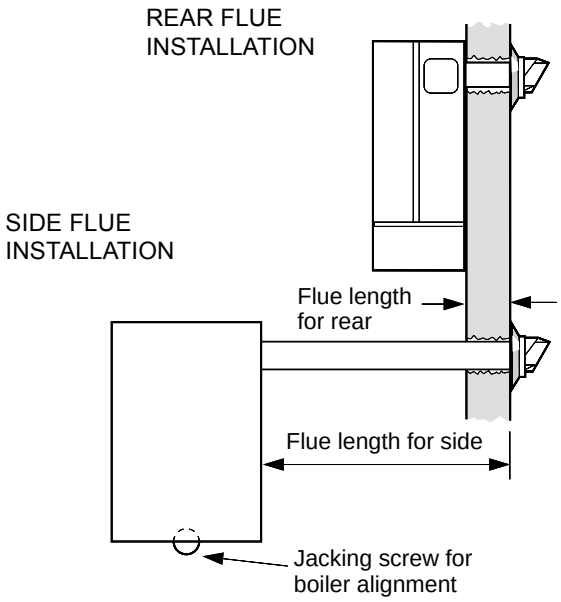


**FLUE KITS**

**Pack B:** supplied as standard.

**Pack D*:** optional extension kit for side flue or rear flue outlet. Refer to 'Flue Extension Ducts'

1. A maximum of 3 extension ducts (plus the standard flue duct) may be used together.

   **Note.**
   *100 Max flue length = 600mm*

2. Flue extensions of greater than 1m (39") should be supported with the bracket provided. If the stand-off brackets have been used it is necessary, in order to keep the flue aligned, to use the spacer bracket with the support bracket.

| Flue length mm | Accessories | Product No. |
|---|---|---|
| Up to 600 | B Pack 1 off | 150 308 |
| 600 to 1550* | B Pack 1 off + D Pack, 1 off | 150308+152132 |
| 1550 to 2500 | B Pack 1 off + D Pack, 2 off | 150308+ 152132, 2 off |
| 2500 to 3000 | B Pack 1 off + D Pack, 3 off | 150308+ 152132, 3 off |

**Note.**
*Vertex and Roof Flue Kits are available as optional extras for vertical flue installation, supplied with separate fitting instructions.*

## 13 REAR FLUE ASSEMBLY - Exploded View

1. An optional flue duct extension kit is required for wall thicknesses greater than 600mm (23 1/2") Refer to Frame 8.
2. When cutting the ducts, always use the cardboard support rings provided.

**IMPORTANT.**
On the 100 model only, the flue extension tube includes an air deflector ring.

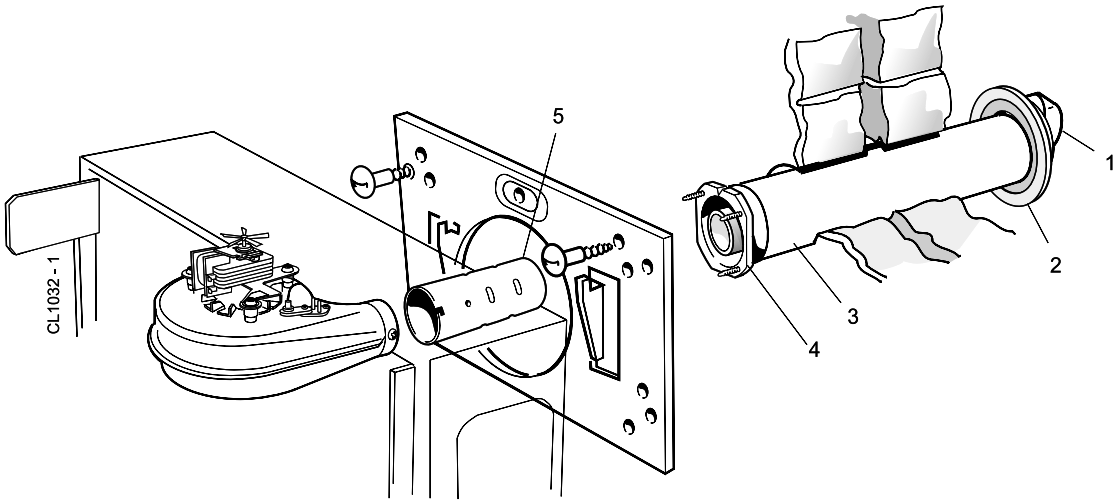


**LEGEND**

1. Terminal.
2. Weather seal.
3. Flue assembly.
4. Boiler sealing ring.
5. Flue extension tube.

FLUE OUTLET

## 14 SIDE FLUE ASSEMBLY - Exploded view

**For wall thickness 114mm to 600mm**

1. An optional flue duct extension kit is required for lengths (distance from the outside wall to the relevant side of the boiler casing) greater than 600mm (23 1/2") Refer to Frame 8.
2. When cutting the ducts always use the cardboard support provided.

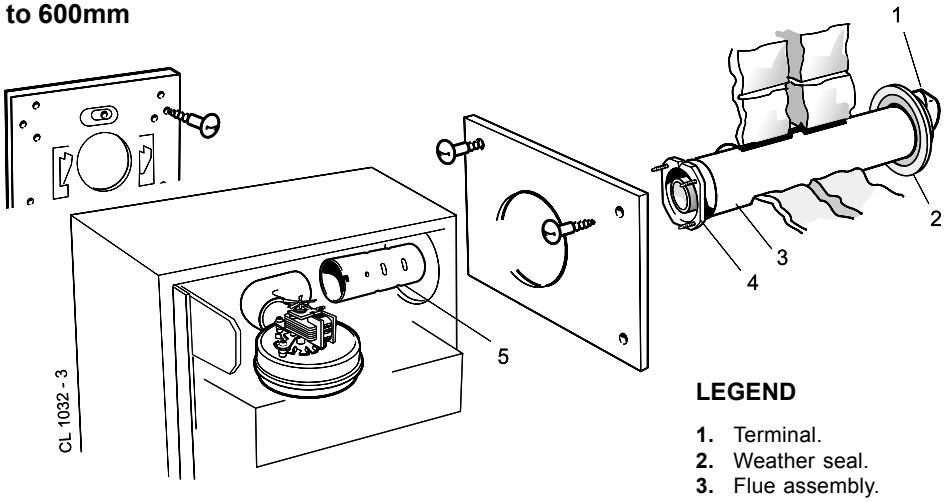


**LEGEND**

1. Terminal.
2. Weather seal.
3. Flue assembly.
4. Boiler sealing ring.
5. Flue extension tube.

**IMPORTANT.**
On the 100 model only, the flue extension tube includes an air deflector ring.

## 15 WALL MOUNTING TEMPLATE - Rear flue

**Note.** *The template shows the positions for the fixing holes and the flue hole centres for standard installation. Care must be taken to ensure the correct holes are drilled.*

1. Separate the templates.
2. Tape the templates into the selected position.
3. Ensure squareness by hanging a plumb line as shown.
4. Mark onto the wall (if required) the following:
   - **a.** The wall mounting plate screw positions (choose one from each group). **Note.** *Mark the centre of the flue hole as well as the circumference.*
   - **b.** The position of the flue duct hole.
   - **c.** Downward pipe routing bracket screw positions.
5. Remove the templates from the wall.

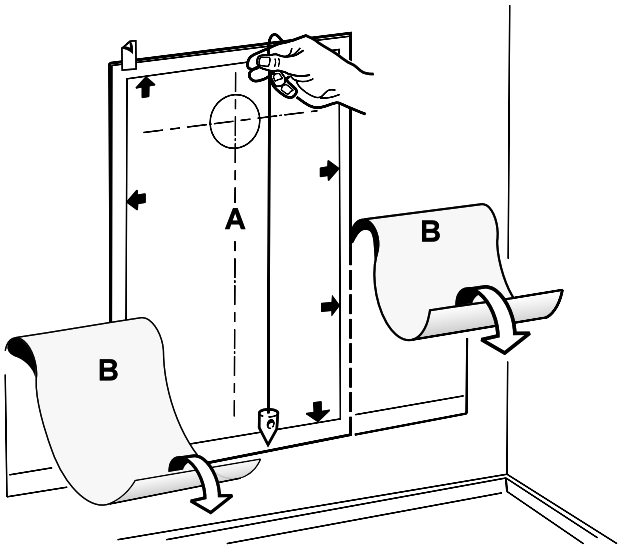


## 16 WALL MOUNTING TEMPLATE - Side flue

**Note.** *The template shows the positions for the fixing holes and the flue hole centres for standard installation.*
*If the flow and return pipes are to be routed down behind the boiler the downward routing pipe brackets, supplied in a separate kit, must be used. These brackets are secured to the wall mounting plate and it is essential to use only those holes as shown on the wall mounting template.*
*Care MUST be taken to ensure the correct holes are drilled.*

1. Separate the templates.
2. Tape both templates into the selected position locating template B through an extended centre line as shown.
3. Ensure squareness by hanging a plumb line as shown.
4. Mark onto the wall (if required) the following:
   - **a.** The 4 wall mounting plate screw positions (choose one from each group). If the downward routing pipe brackets are used ensure the correct holes are chosen.
   - **b.** The 4 screw positions for the side outlet plate.
   - **c.** The position of the flue duct hole (ensure that the correct centre is marked depending on whether the downward routing pipe brackets are used or not).

   **Note.** *Mark the centre of the hole as well as the circumference.*
   - **d.** The side of the casing nearest the flue outlet.
5. Remove both templates from the wall.

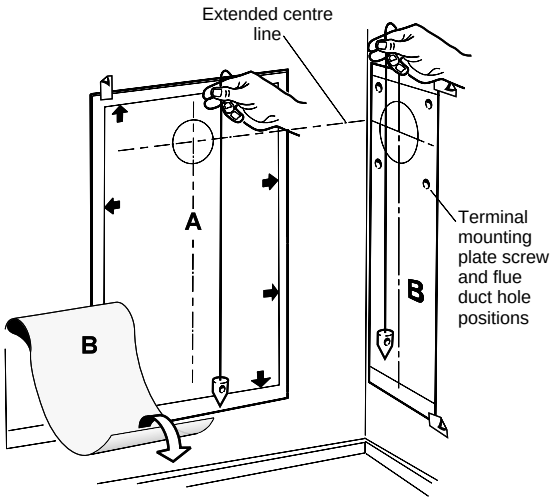


FLUE OUTLET

## 17 PREPARING THE WALL

**IMPORTANT.**
Ensure that, during the cutting operation, masonry falling outside of the building does not cause damage or personal injury.

1. Cut the flue hole, preferably with a 125mm (5") core boring tool, ensuring that the hole is square to the wall. If the hole has been accurately cut with a drill then making good the wall faces is not essential as seals are provided at both ends of the flue. However, both wall faces immediately around the cut hole should be flat; make good if necessary. For less accurate holes make good to approximately 125mm (5") diameter at the 2 wall faces.
2. Drill 4 holes with an 8mm (5/16") masonry drill and insert the plastic plugs provided, for the wall mounting plate.

**Side flue only**

3. Drill 4 holes with a 7mm (9/32") masonry drill and insert the plastic plugs provided, for the side mounting plate.

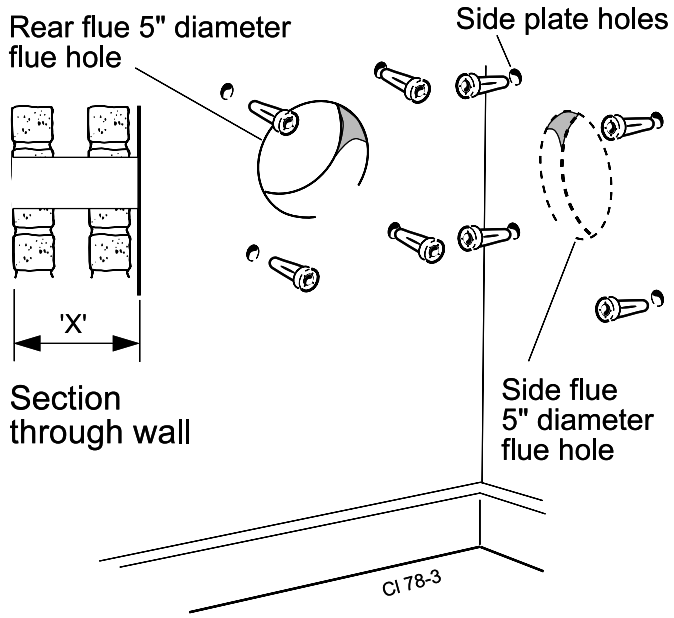


**Note.** *If the terminal is to be sited within 25-40mm of a corner or vertical pipe (refer to Table 3) then the hole MUST be accurately cut and the rubber weather seal trimmed around the groove provided. The terminal wall plate need not be fitted.*

## 18 CUTTING THE FLUE - wall thicknesses of 114 to 600mm

**Note.** *If the stand-off brackets are used it is essential that 30mm is added to the measured wall thickness when marking the flue (to allow for the thickness of the brackets).*

1. Measure and note the wall thickness X.
2. Mark the wall thickness onto the flue.
3. To ensure the tube is cut square, mark the flue all the way round.
4. Cut to length X, using the cardboard ring for support.
5. Remove cardboard ring and remove any burrs.

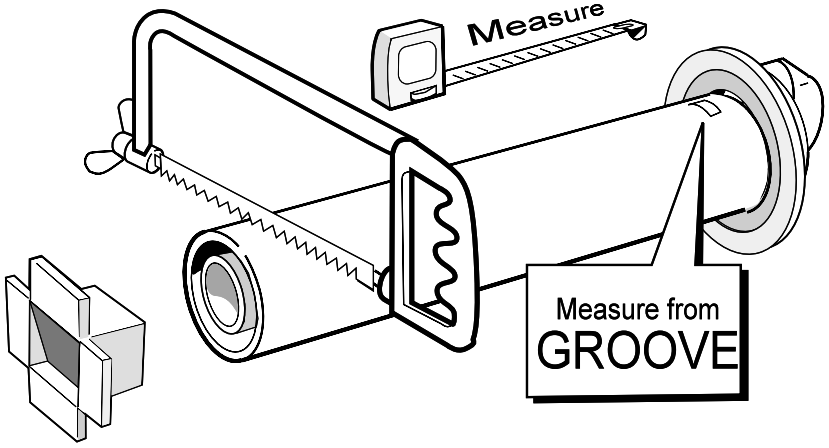


For flue lengths greater than 600mm, refer to Frames 26 & 27 - Flue extension ducts.

## 19 FITTING THE BOILER SEALING RING TO THE FLUE

1. Fit the boiler sealing ring inside the outer flue duct. Ensure the boiler sealing ring is fully engaged.

   Ensure the notch aligns with the groove on the outer flue duct. This ensures correct alignment of the flue terminal.

2. Drill 3 holes 3.2mm (1/8") dia. through the outer flue duct and boiler sealing ring. **Do NOT drill the inner flue duct.**

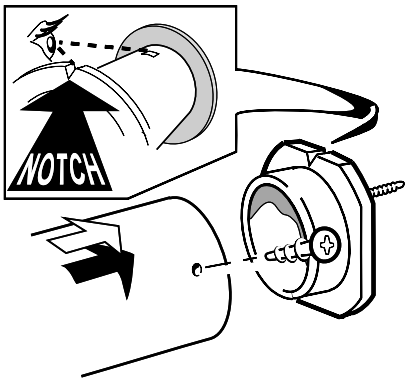


3. Insert the self-tapping screws, provided, in order to fix the boiler sealing ring in position.

4. Stick the self-adhesive foam strip, provided in the hardware pack, onto the flue immediately behind the boiler sealing ring.

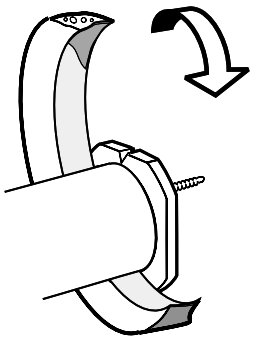

## 20 FITTING THE FLUE ASSEMBLY

**Rear Flue only**

1. Insert the flue extension tube into the flue assembly.

**Side & Rear flue**

2. Insert the flue assembly through the hole far enough to allow the rubber seal to unfold completely and form an adequate seal on the outside wall.
3. Ensure the notch is at the top. This will aid the location of the studs into the boiler back panel.

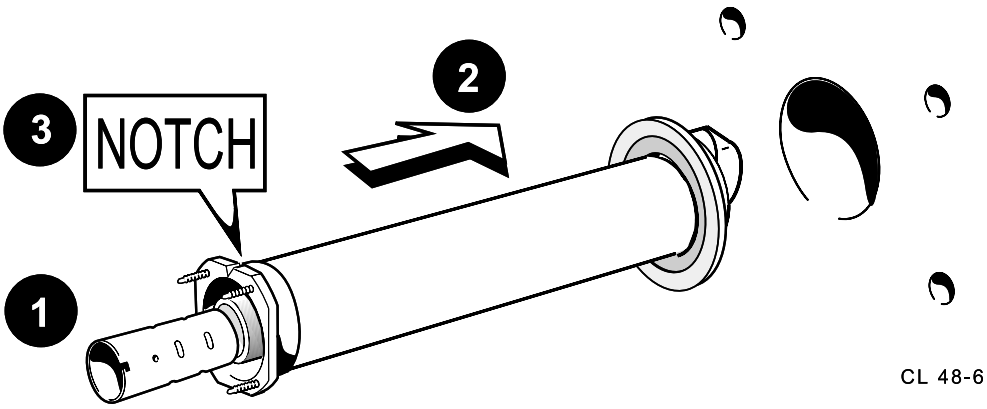


## 21 FITTING THE SIDE OUTLET PLATES
### Side outlet flues only

**Note.** *If the boiler is fitted closer than 25mm to the side wall the side outlet plate must be fitted now.*

1. Split the side outlet plate into 2 down the split line.
2. Fit the 2 halves of the side outlet plate to the wall, ensuring they are behind the boiler sealing ring.

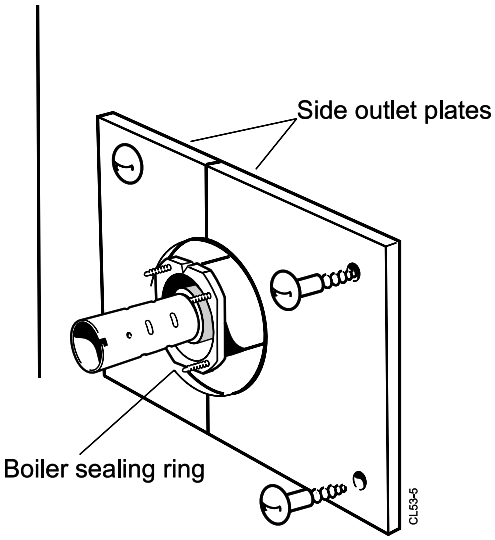

## 22 WALL MOUNTING PLATE

1. Fix the mounting plate to the wall with the No.14 x 50mm wood screws.
2. If downward routing of pipes is required then the downward routing pipe brackets and M8 spacer should be fitted to the wall mounting plate now (supplied in separate kit).
3. Fit the bottom 2 screws to secure the brackets to the wall, through the wall mounting plate.
4. Check with a spirit level that the plate is vertical.

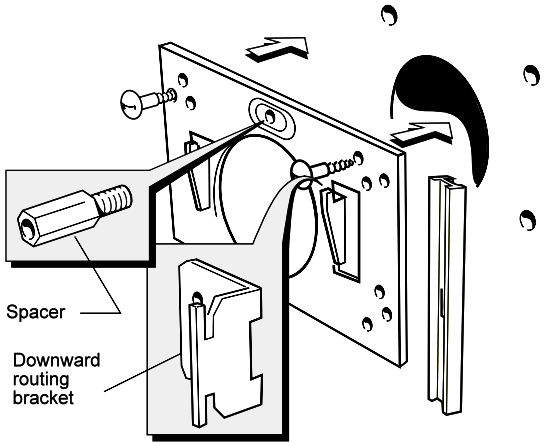


## 23 MOUNTING THE BOILER

**Notes**

**a.** *Have ready to hand the M8 screw, washer and rectangular plate supplied in the hardware pack. Before fully tightening the M8 screw check the boiler alignment using a spirit level and adjust as necessary with the jacking screw..*

**b.** *For downward routing of pipes the M5 spacer should now be fitted to the back of the boiler* (supplied in separate kit).

**Side flue only**

1. The boiler is supplied for rear outlet installation. Remove the blanking plate from the direction required and use this to blank off the rear outlet.

**Side and rear flue**

2. Lift the boiler onto the wall mounting plate hooks as shown.

   ***Do not use the burner/controls for lifting.***

3. Fit the M8 screw, washer and rectangular plate to retain the boiler.

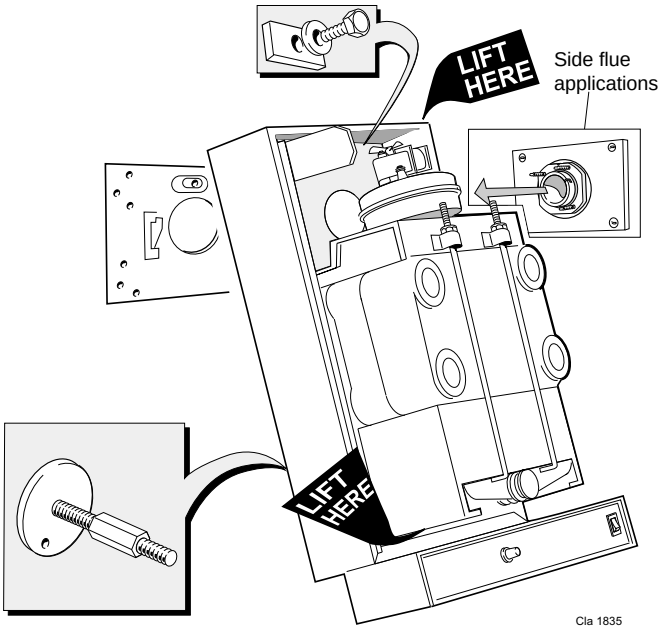


## 24 CONNECTING THE FLUE TO THE BOILER

**IMPORTANT**

On the 100 model only, the flue extension tube includes an air deflector ring.

1. Pull the flue through the wall mounting plate and locate the 3 studs in the holes in the back /side panel.
2. Secure the flue to the boiler using the three M5 wing nuts provided.

**3a.** **Rear flue:** Pull the flue extension tube and engage onto the fan. Locate and secure with the M4 screw attached to the fan.

**3b.** **Side flue:** Fit the 90° elbow, supplied on to the fan in the direction required after first removing the underside screw (not required). Secure in position with the screw attached to the fan. Pull the flue extension tube and engage onto the fan elbow. Secure with the screw attached to the elbow.

**Note.**

*The sealing ring studs will locate in the back panel one way only. This will ensure that the terminal grille is correctly aligned.*

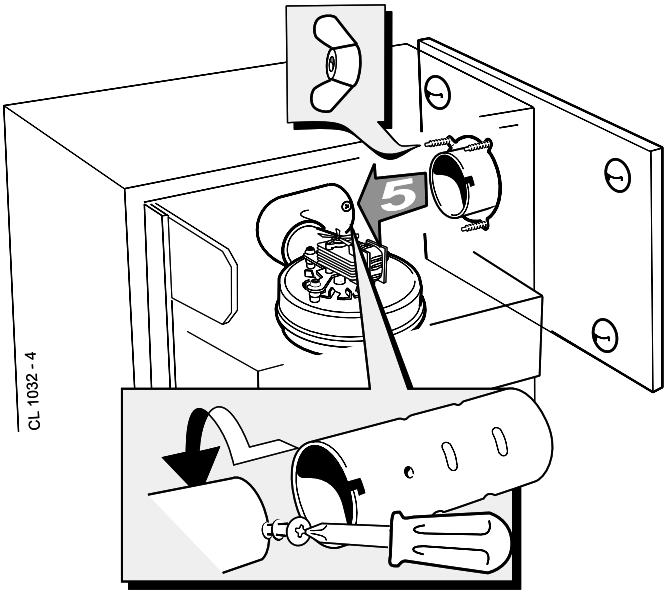


FLUE OUTLET

## 25 TERMINAL WALL PLATE

This plate allows neat concealment and full compression of the rubber seal. Its use is not essential if the flue hole and flue ducts have been accurately cut and the outside wall face is flat.

1. Position the terminal wall plate over the terminal.
2. Drill 4 fixing holes with a 7mm (9/32") masonry drill.
3. Insert the 4 plastic plugs provided.
4. Secure the plate with 4 of the No.10 x 2" screws provided.

**Note.** *If the terminal is less than 2m (6' 6") above ground level, an approved terminal guard should be fitted. Refer to flue installation on Page 7.*

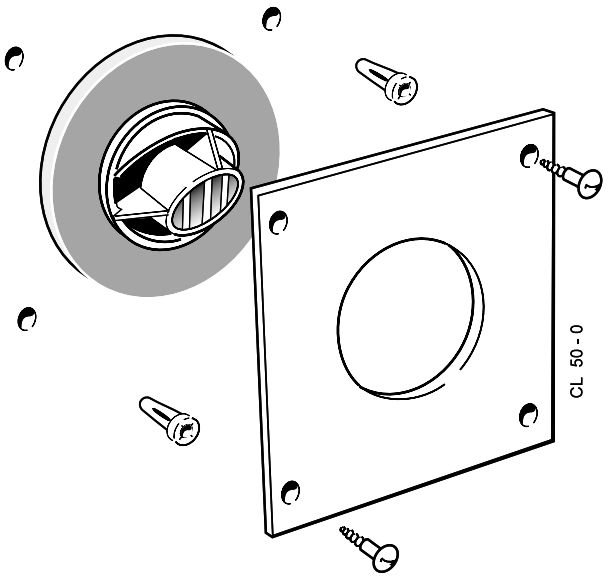


## 26 FLUE EXTENSION DUCTS - For flue lengths greater than 600mm (Not for 100 model)

**PACK D Flue extension duct kit contents.**

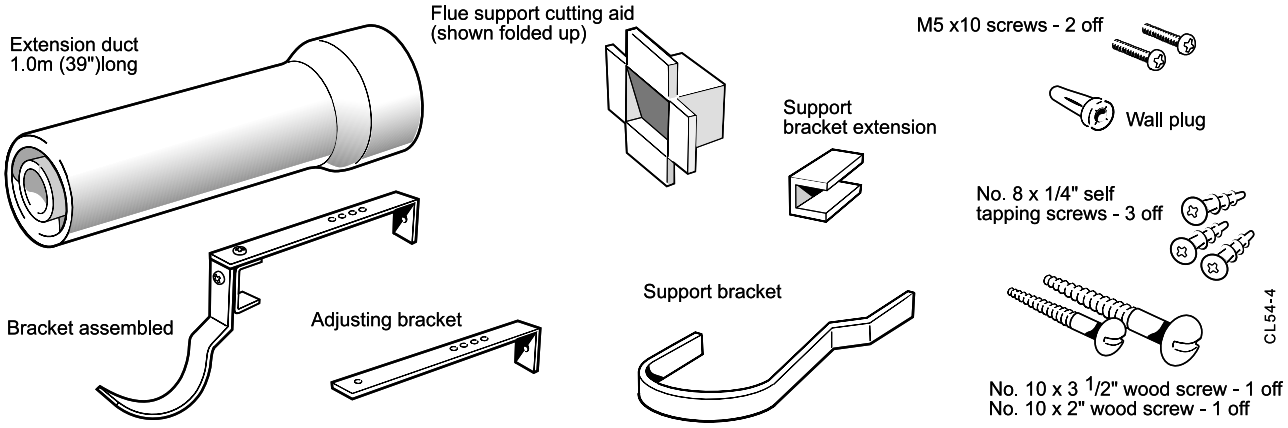


## 27 FLUE EXTENSION DUCTS - continued

**General arrangement**

1. A *maximum* of 3 extension ducts (plus the standard flue duct) may be used together.

   **Note.**
   *100 Max flue length = 600mm*

2. Flue extensions of greater length than 1m (39") should be supported with the bracket provided. If the stand-off brackets have been used it is necessary, in order to keep the flue aligned, to use the spacer bracket with the support bracket.

| Flue length | Accessories | Product No. |
|---|---|---|
| Up to 600 | B Pack 1 off | see Frame 12 |
| 600 to 1550 | B Pack 1 off + D Pack, 1 off | see Frame 12 |
| 1550 to 2500 | B Pack 1 off + D Pack, 2 off | see Frame 12 |
| 2500 to 3000 | B Pack 1 off + D Pack, 3 off | see Frame 12 |

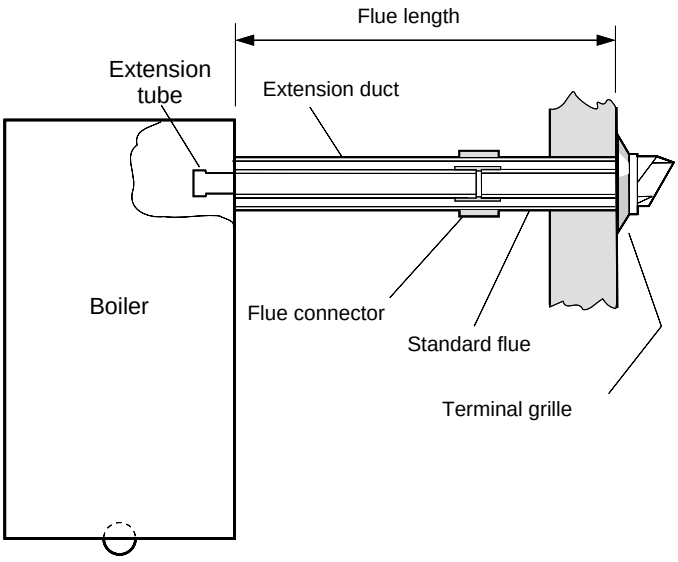


**Note.** *Side flue shown.*

## 28 FITTING THE KIT

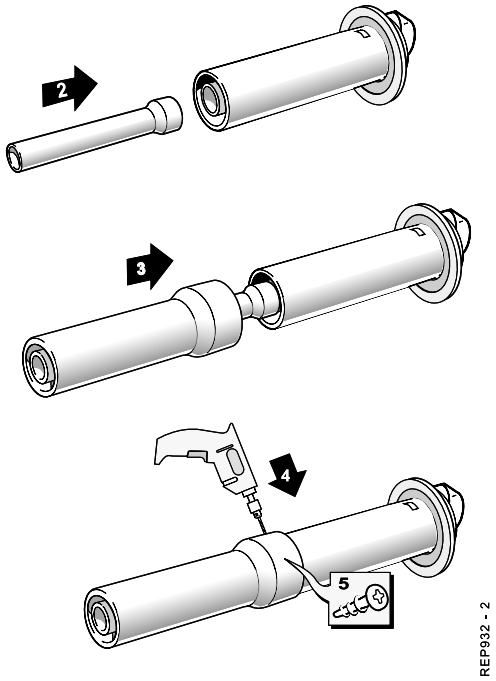


1. Remove the cardboard support aid from the flue and place safely to one side.
2. Fit the inner flue extension duct onto the inner flue duct.
3. Fit the outer flue extension duct onto the outer air duct.
4. Drill 3 - 3.2mm (1/8") dia. holes through the outer air duct. ***Do not drill the inner flue duct.***
5. Insert the self tapping screws provided to fix the air duct in position.
6. Repeat steps 1-5 if a second flue extension is required.

## 29 GAS CONNECTION

**Refer to 'Gas Supply ', page 7.**
**Refer to Frame 2 for gas inlet service dimensions.**

A **minimum** pressure of 20 mbar MUST be available at the boiler inlet with the boiler operating. The main gas cock is on the left hand side of the gas control valve, as shown. To facilitate connection the gas cock may be removed from the gas control valve.

## 30 WATER CONNECTIONS

1. Remove the plastic plugs from the flow and return pipes.
2. Make all water connections and check for water soundness.

## 31 ELECTRICAL CONNECTIONS

***WARNING.*** The appliance must be efficiently earthed.

A mains supply of 230 V ~ 50 Hz is required.

All external controls and wiring must be suitable for mains voltage. Wiring should be in 3-core PVC insulated & sheathed cable, not less than 0.75mm$^2$ (24 x 0.2mm) to BS. 6500 Table 16 Wiring Regulations and local regulations.

Connection must be made in a way that allows complete isolation of the electrical supply - such as a double pole switch, having a 3mm (1/8") contact separation in both poles, serving only the boiler and system controls. The point of connection to the mains should be readily accessible and clearly marked.

1. Remove the control box securing screws. Swing the box down into the servicing position. Refer to Frames 40 & 41.
2. Route the mains cable into the box from the LHS of the boiler.
3. Connect the live and neutral wires into the terminal strip as shown.

**Note.** *The boiler must be provided with this permanent supply to terminal L & N.*

4. Connect the earth wire to the earth post.
5. Secure the mains lead with the cable clamp.

**IMPORTANT.**
Control switching must not take place in this mains supply.

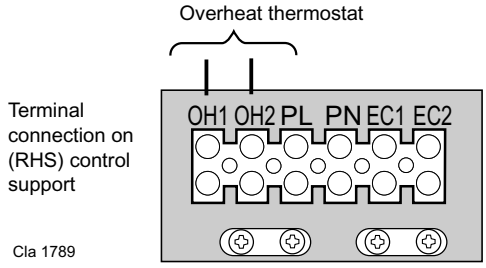


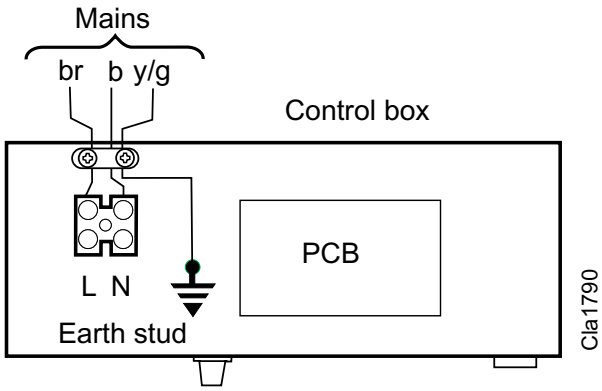


**Note.**
*For gravity DHW applications the pump MUST be wired through the programmer and NOT directly to PL & PN.*

## 32 FLOW WIRING DIAGRAM

**LEGEND**

| | | | |
|---|---|---|---|
| **b** | blue | **gy** | grey |
| **bk** | black | **or** | orange |
| **br** | brown | **v** | violet |
| **r** | red | **pk** | pink |
| **y** | yellow | **g/y** | green/yellow |
| **w** | white | | |

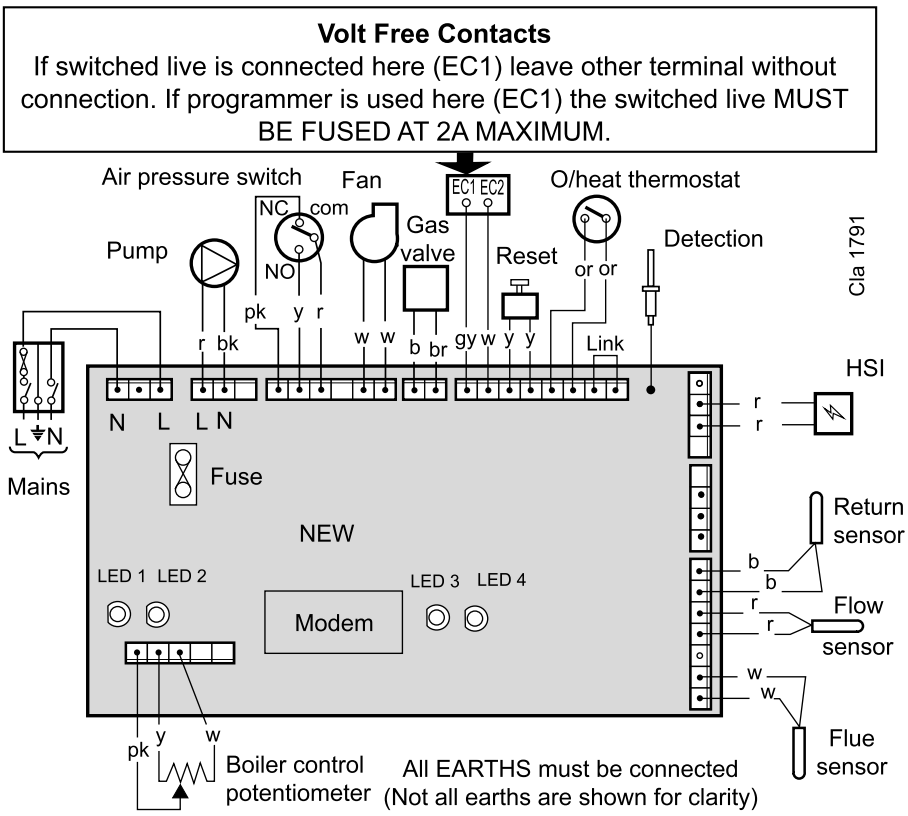


## 33 EXTERNAL CONTROLS

The wiring diagrams illustrated in Frames 35-37 cover the systems most likely to be fitted to this appliance.

For wiring external controls to the boiler, reference should be made to the system wiring diagrams supplied by the relevant manufacturer, in conjunction with the wiring diagrams shown in Frames 35-37.

Difficulty in wiring should not arise, providing the following directions are observed:

1. **Preferred wiring method.**
   Controls that switch the system on or off, e.g. a time switch, must be wired, in series and terminate with a volt free contact across EC1/EC2.

2. **Alternative wiring method.**
   A switched live supply may be connected to EC1 (leaving EC2 without connection), which must be fused at 2A Maximum.

**IMPORTANT.**
A link wire between terminals EC1 and EC2 is not acceptable.

**Notes.**

*a. Route the cable to terminal EC1 and EC2 from the RHS of the boiler.*

*b. The terminal plate may be unscrewed from the controls support to improve access for connection.*

3. Controls that override an on/off control, e.g. frost thermostat must be wired, in parallel, with the control(s) to be overridden. Refer to Frame 38.

4. If a proprietary system is used, follow the instructions supplied by the manufacturer.
   Advice on required modifications to the wiring may be obtained from the component manufacturers.

**Preferred Wiring Method.**

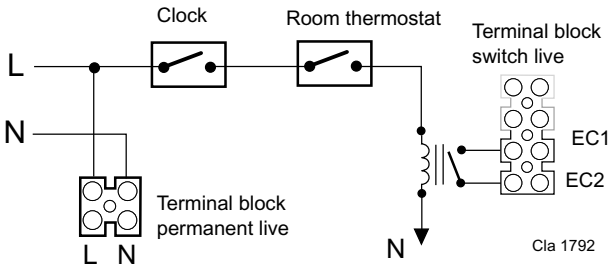


**Alternative Wiring Method.**

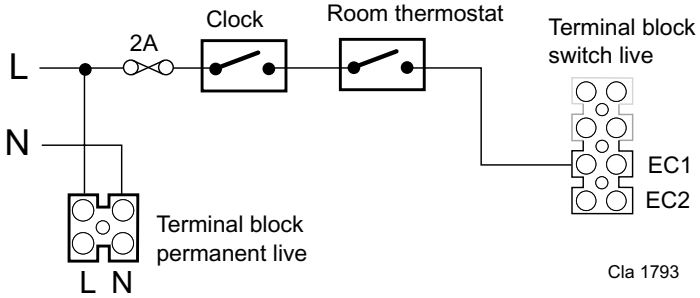


5. On completion of all wiring connections, relocate the control box and secure.

**Notes.**

1. *Connection between a frost thermostat and the time control should be made without disturbing other wiring.*
2. *A frost thermostat should be sited in a cool place in the house, but where it can sense heat from the system.*

## 34 PICTORIAL WIRING

**IMPORTANT.** No system controls to be wired in this mains supply.

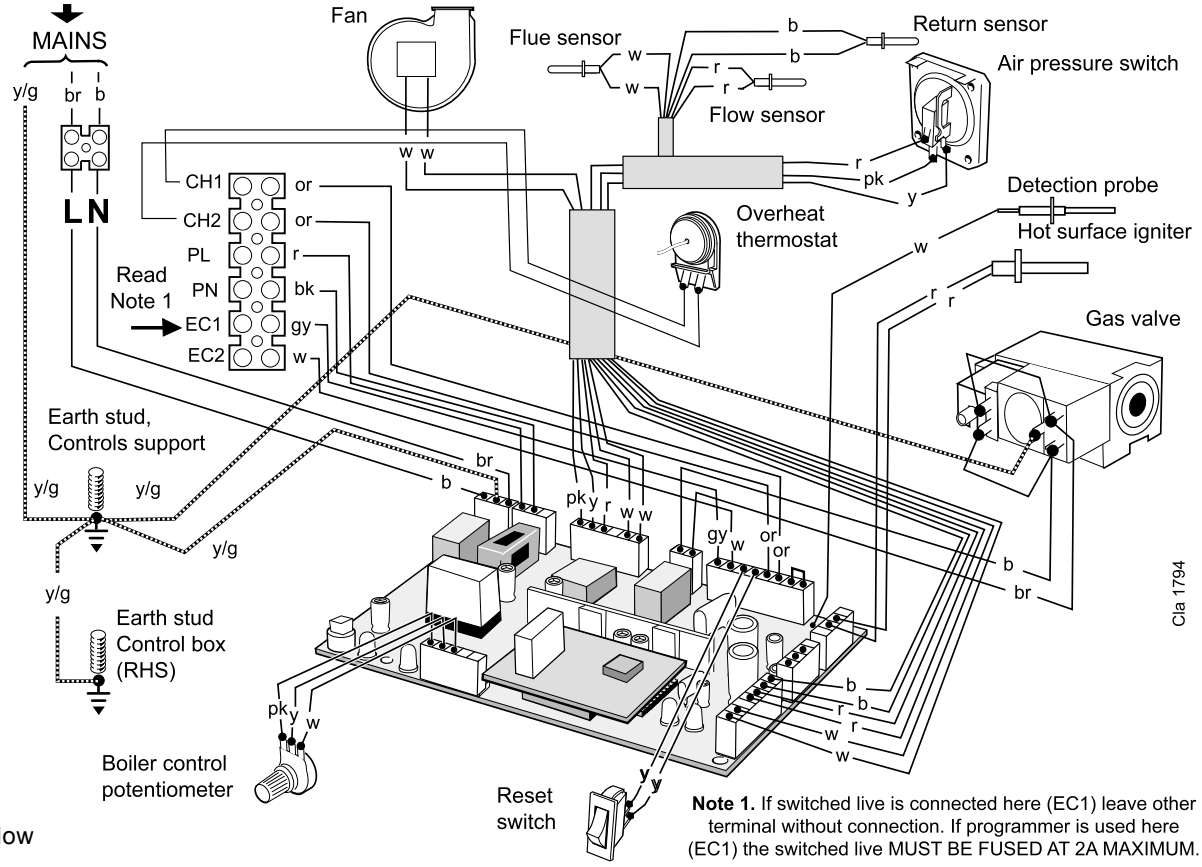


**LEGEND**

| | |
|---|---|
| **b** | blue |
| **bk** | black |
| **br** | brown |
| **r** | red |
| **y** | yellow |
| **w** | white |
| **or** | orange |
| **v** | violet |
| **pk** | pink |
| **gy** | grey |
| **y/g** | green/yellow |

**Note 1.** If switched live is connected here (EC1) leave other terminal without connection. If programmer is used here (EC1) the switched live MUST BE FUSED AT 2A MAXIMUM.

## 35 MID POSITION VALVE (Pumped only)

**Notes.**

1. Some earth wires are omitted for clarity.
   Ensure proper earth continuity when wiring.
2. For numbering of terminals on thermostats see the manufacturer's literature.
3. This is a fully controlled system - set the boiler thermostat to maximum.
4. Switchmaster (Smiths) valves are similar but the wiring is different. Consult the diagram supplied with valve.

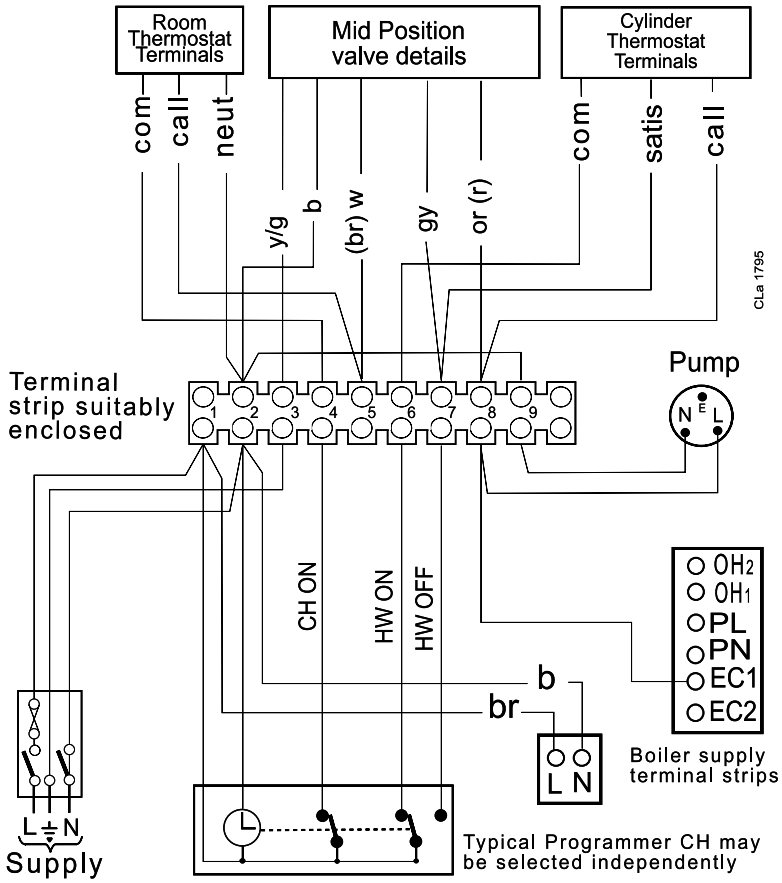


**LEGEND**

| | | | |
|---|---|---|---|
| **b** | blue | **w** | white |
| **bk** | black | **y/g** | yellow/green |
| **br** | brown | **or** | orange |
| **r** | red | **gy** | grey |

## 36 TWO SPRING CLOSED VALVE (Pumped only)

**Notes.**

1. Some earth wires are omitted for clarity.
   Ensure proper earth continuity when wiring.
2. For numbering of terminals on thermostats see the manufacturer's literature.
3. This is a fully controlled system - set the boiler thermostat to maximum.
4. Switchmaster (Smiths) valves are similar but note that the GREY wire (not the orange wire) MUST be the one connected to permanent L.

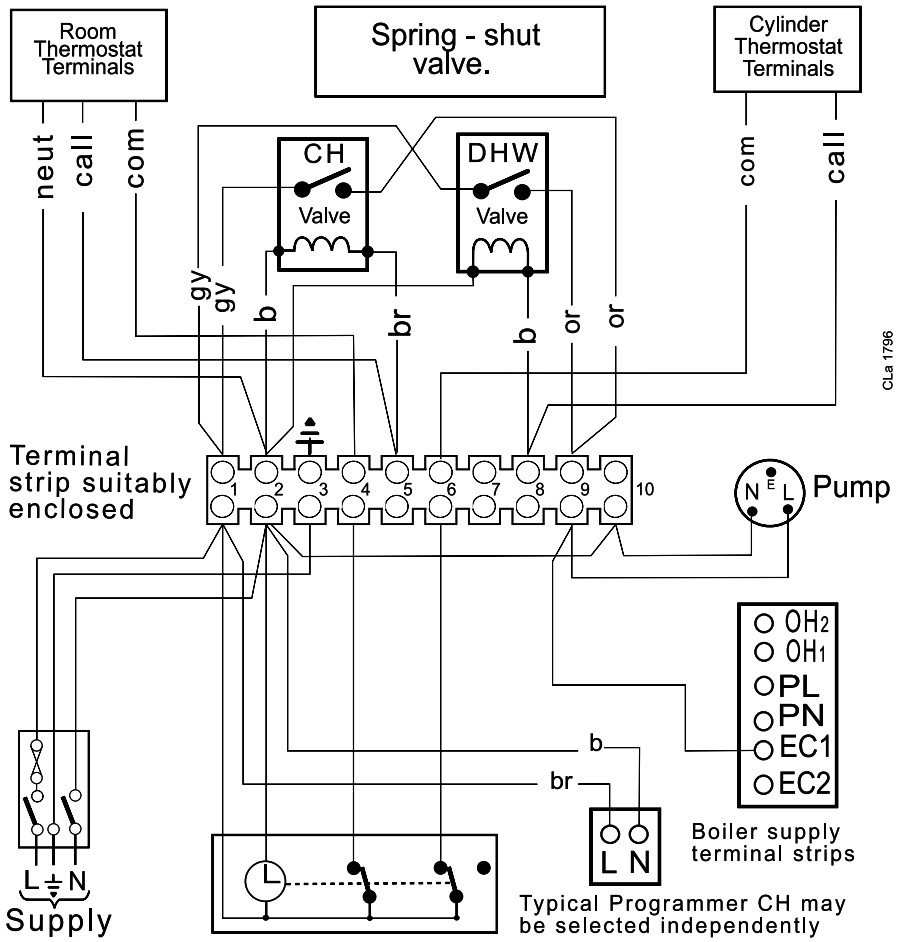


**LEGEND**

| | | | |
|---|---|---|---|
| **b** | blue | **w** | white |
| **bk** | black | **y/g** | yellow/green |
| **br** | brown | **gy** | grey |
| **r** | red | **or** | orange |
| **y** | yellow | **v** | violet |
| | | **pk** | pink |

## 37 HONEYWELL 'C' PLAN (Gravity HW & Pumped CH)

**Notes.**

1. Some earth wires are omitted for clarity. Ensure proper earth continuity when wiring
2. Numbering of terminals on thermostats is specific to the manufacturer.

**IMPORTANT.**

The pump must NOT be wired directly into the boiler.

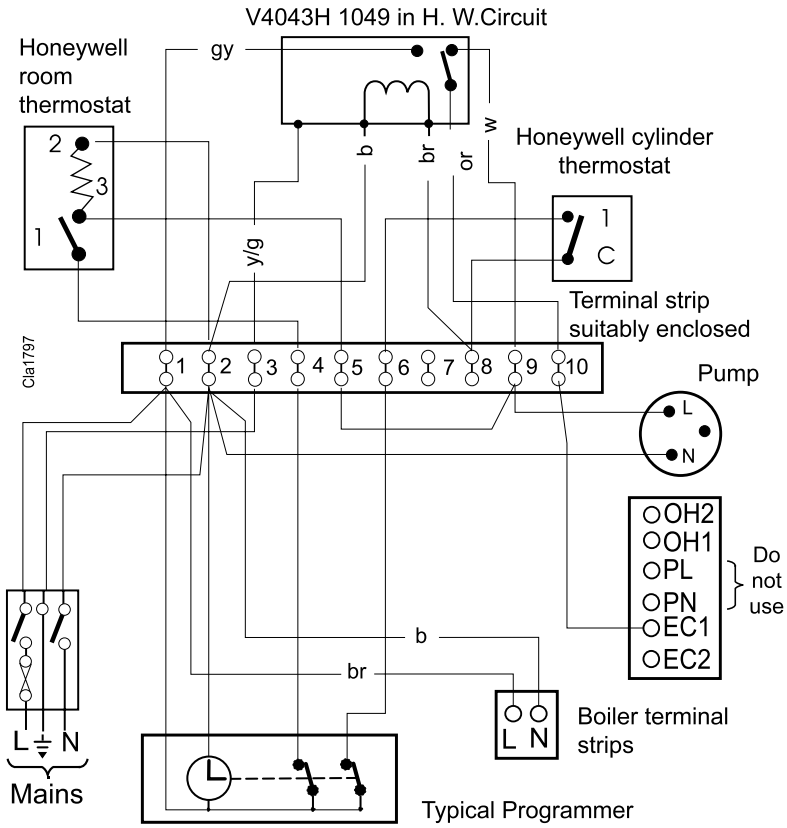


**LEGEND**

| | | | |
|---|---|---|---|
| **b** | blue | **w** | white |
| **bk** | black | **y/g** | yellow/green |
| **br** | brown | **gy** | grey |
| **r** | red | **or** | orange |
| **y** | yellow | **v** | violet |
| | | **pk** | pink |

## 38 FROST PROTECTION

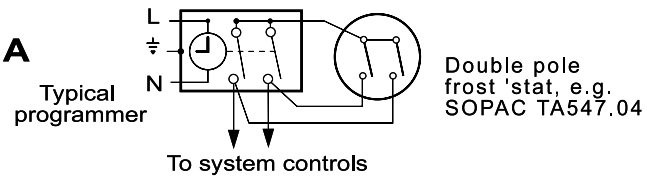


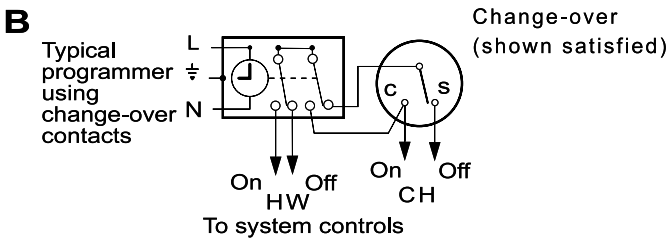


Clock with volt free contacts should be used.

Central heating systems fitted wholly inside the house do not normally require frost protection as the house acts as a 'storage heater' and can normally be left at least 24 hrs. without frost damage. However, if parts of the pipework run outside the house or if the boiler will be left off for more than a day or so, then a frost thermostat should be wired into the system.

This is usually done at the programmer, in which case the programme selector switches are set to OFF and all other controls MUST be left in the running position.

The frost thermostat should be sited in a cold place but where it can sense heat from the system.

Wiring should be as shown, with minimal disturbance to other wiring of the programmer.

Designation of the terminals will vary but the programmer and thermostat manufacturer's leaflets will give full details.

If a boiler is installed in a garage it may be necessary to fit a pipe thermostat.

**Diagram A** shows a double pole frost thermostat, which should suffice for all systems which do not use the OFF terminals of the programmer.

**Diagram B** shows a 'change-over' frost 'stat, which will cover most systems which do use CH OFF. If, however, on such a system the HW pipework is in an isolated part of the house, a second frost 'stat may be used to protect it. If in doubt, ask your installer for advice.

## 39 COMMISSIONING AND TESTING

### (a) Electrical Installation

1. Checks to ensure electrical safety should be carried out by a competent person.
2. ALWAYS carry out preliminary electrical system checks, i.e. earth continuity, polarity, resistance to earth and short circuit using a suitable test meter.

### (b) Gas Installation

1. The whole of the gas installation, including the meter, MUST be inspected and tested for soundness, and purged in accordance with the recommendations of BS. 6891.
2. Purging air from the gas installation may be expedited by loosening the union on the gas service cock on the boiler and purging until gas is detected.
3. Retighten the union and check for gas soundness.

***WARNING.*** Whilst effecting the required gas soundness test and purging air from the gas installation open all windows and doors, extinguish naked lights and **DO NOT SMOKE.**

## 40 INITIAL LIGHTING

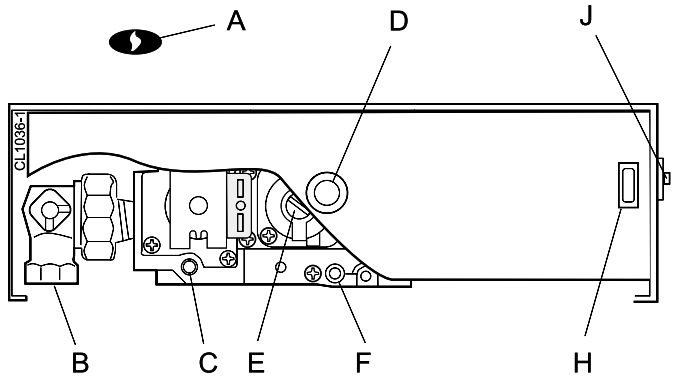


**LEGEND**

- **A** Sightglass.
- **B** Gas service cock.
- **C** Inlet pressure test point.
- **D** Control knob
- **E** Main burner pressure adjuster.
- **F** Burner pressure test point.
- **H** Boiler reset switch.
- **J** Overheat 'stat reset button.

### TO LIGHT THE BOILER

1. Check that all the drain cocks are closed, and any valves in the flow and return are open.
2. Check that the gas service cock (B) is OPEN and the boiler control knob (D) is OFF.
3. **Fitting the Boiler Casing**

   The boiler casing must be refitted with the controls support casing attached for alignment purposes. Lift the boiler casing up to the boiler assembly, with the casing top angled forward. Hook the top edge of the boiler casing into the channel on the top of the boiler assembly. Swing the bottom of the casing down and secure with the 2 captive screws.

The casing must seat correctly and compress the sealing strip to make an airtight joint.
Visually check the side seals but, if side clearances are limited, then check that the top and bottom edges of the casing are correctly located.

*If the Sealed System Unit is fitted remove the unit casing in order to inspect the top casing seal.*

To gain access to the gas valve:

**a.** Remove the controls support casing. Release the controls support front fixing screws 3 turns only. Remove the pod by pulling it forward to disengage from the keyhole slots.

**b.** Remove the control box securing screws and swing it down into the servicing position. See diagram B.

4. Slacken the screw in the burner pressure test point (F) and connect a gas pressure gauge via a flexible tube.
5. Swing the control box back into its working position.
6. Switch the electricity supply ON and check that all external controls are calling for heat.
7. Press the boiler reset switch (H) and the overheat thermostat reset button (J).
8. Set the boiler control knob (D) to maximum. The fan will start. After the fan has run for a few seconds the gas valve should open and the ignition commence. The main burner will then cross-light smoothly. The boiler will attempt 5 ignitions. If the boiler does not light, press the reset switch (H) and the ignition sequence will be repeated. If the boiler still does not light, refer to the 'Fault Finding' section.
9. Test for gas soundness around ALL boiler gas components using leak detection fluid.
10. Operate the boiler for 10 minutes to stabilise the burner temperature.
11. The boiler is pre-set at the factory but if any adjustment is necessary proceed as follows:
    - **a.** Set the boiler control knob to OFF.
    - **b.** Switch the electricity supply OFF.
    - **c.** Swing the control box down into the servicing position.
    - **d.** Remove the main burner adjuster cover.
    - **e.** Turn the adjusting screw *clockwise* to INCREASE the pressure, or *anticlockwise* to DECREASE the pressure.
    - **f.** Swing the control box back into its working position.
    - **g.** Switch the electricity supply ON and check the new setting pressure.
12. If necessary repeat steps **11 a** to **g** until the correct burner pressure is achieved. Record this value in the Benchmark log book.
13. Set the boiler control knob to OFF.
14. Switch the electricity supply OFF.
15. Swing the control box down into the servicing position.
16. Refit the main burner pressure adjuster cover.
17. Remove the pressure gauge and tube. Retighten the sealing screw in the pressure test point. Ensure a gas tight seal is made.
18. Swing the control box back into its working position and secure.

## 41 INITIAL LIGHTING- continued

**19.** Remove the boiler casing.

**20.** Refit the controls support to the boiler casing and tighten the 2 front fixing screws.

**21.** Refit the complete casing to the boiler.

**22.** Close the pod door.

**23.** Finally stick the appropriate British/ Scottish Gas Logo (supplied in the hardware pack) in the recess at the top LH corner of the controls pod door.

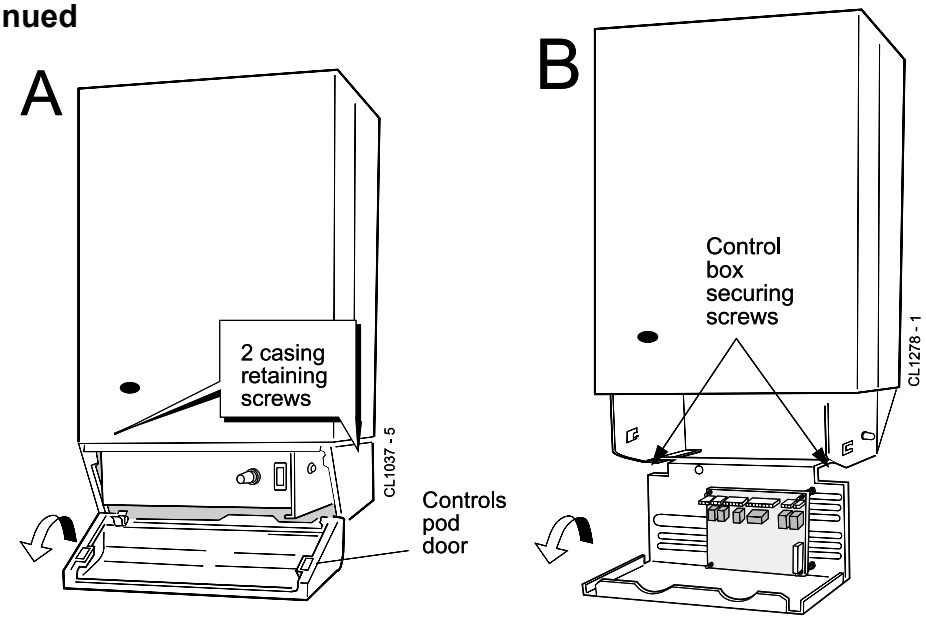


## 42 GENERAL CHECKS

**Make the following checks for correct operation:**

1. Set the boiler control knob to maximum. Check that the main burner lights and extinguishes in response.
2. The correct operation of ANY programmer and all other system controls should be proved.
   Operate each control separately and check that the main burner or circulating pump, as the case may be, responds.
3. Check that the casing is sealed correctly and compressing the sealing strip all around the casing.
4. **Water Circulating System**
   - **a.** With the system HOT, examine all water connections for soundness.
   - **b.** With the system still hot, turn off the gas, water and electricity supplies to the boiler and drain down, in order to complete the flushing process.
   - **c.** Refill and vent the system, clear all air locks and again check for water soundness.
   - **d.** Balance the system.
5. Finally, set the controls to the user's requirements.

The temperatures quoted below are approximate and vary between installations.

| Knob Setting | Flow Temperature | |
|---|---|---|
| 1 | 54°C | 130°F |
| 2 | 60°C | 140°F |
| 3 | 66°C | 150°F |
| 4 | 71°C | 160°F |
| 5 | 77°C | 170°F |
| 6 | 82°C | 180°F |

***WARNING.*** The boiler MUST NOT be operated with the casing removed.

## 43 HANDING OVER

**After completing the installation and commissioning of the system the installer should hand over to the householder by the following actions:**

1. Hand the User's Instructions to the Householder and explain his or her responsibilities under the current Gas Safety (Installation and Use) Regulations or the rules in force.
2. Draw attention to the Lighting Instruction label affixed to the controls support door.
3. Explain and demonstrate the lighting and shutting down procedures.
4. The operation of the boiler and the use and adjustment of ALL system controls should be fully explained to the Householder, to ensure the greatest possible fuel economy, consistent with household requirements of both heating and hot water consumption.
   Advise the User of the precautions necessary to prevent damage to the system and to the building, in the event of the system remaining inoperative during frosty conditions.
5. Explain the function and the use of the boiler thermostat and external controls.
6. Explain the function of the boiler overheat thermostat and emphasise that if cutout persists, the boiler should be turned off and a CORGI registered installer consulted.
7. Explain and demonstrate the function of time and temperature controls, radiator valves etc., for the economic use of the system.
8. If any programmer is fitted draw attention to the programmer User's Instructions and hand them to the Householder.
9. **After installation, commissioning, and customer hand-over instructions please complete the benchmark appliance log book and leave this with the customer.**
10. Stress the importance of regular servicing by a CORGI registered installer and that a comprehensive service should be carried out AT LEAST ONCE A YEAR.
11. As the installer you may wish to undertake the service contract yourself or alternatively offer to the customer the benefits of the British Gas Services, details of which are outlined in the household pack supplied with this boiler.

## 44 SCHEDULE

To ensure the continued safe and efficient operation of the appliance, it is recommended that it is checked at regular intervals and serviced as necessary.
The frequency of servicing will depend upon the installation condition and usage, but should be carried out at least annually. It is the law that any service work must be carried out by CORGI resgistered installer**.**

**a.** Light the boiler and carry out a pre-service check, noting any operational faults. Operate the boiler for at least 20 minutes. Check the gas consumption.

**b.** Connect a suitable gas analyser to the sampling point on the top RHS of the back panel. For correct boiler operation the $CO/CO_2$ content of the flue gas should not be greater than 0.004 ratio. If this is the case and the gas input is at least 90% of the nominal, then no further action need be taken. If not, proceed to paragraph **c**.

**c.** Clean the main burner. Refer to Frame 48.

**d.** Clean the heat exchanger. Refer to Frame 47.

**e.** Clean the main and pilot injectors. Refer to Frame 48.

**f.** Remove any debris from inside the base of the casing.

**g.** Check that the flue terminal is unobstructed and that the flue system is sealed correctly.

**h.** If the appliance has been installed in a compartment, check that the ventilation areas are clear.

The servicing procedures are covered more fully in Frames 45 to 50 and must be carried out in sequence.

***WARNING.***
Disconnect the electrical supply and turn off gas supply.

**IMPORTANT.** After completing the servicing or exchange of components always test for gas soundness and carry out functional checks as appropriate.

When work is complete the casing MUST be correctly refitted, ensuring that a good seal is made.

***The boiler must NOT be operated if the casing is not fitted.***

**Note.** *In order to carry out either servicing or replacement of components, the boiler casing must be removed. Refer to Frame 45 .*

## 45 BOILER CASING REMOVAL

1. If the **Sealed System Unit** is fitted lift off the casing.
2. Open the controls support door and release the 2 captive screws at the bottom of the casing. Swing the bottom of the boiler casing out until the controls support casing has cleared the controls, then unhook the casing top from the pack panel. Retain the casing in a safe place.Where the removal of the casing is impaired by a pelmet, the instruction in Frame 2 should be followed.
3. Isolate the gas supply at the service cock fitted to the boiler.

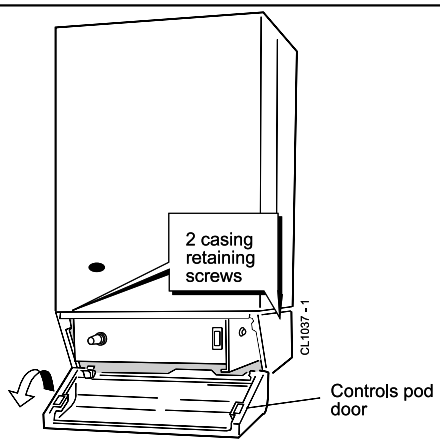


## 46 BURNER, IGNITER AND AIR BOX REMOVAL

1. Remove the screw retaining the front burner support strap to the combustion chamber. Remove the M5 pozi situated at the LH bottom rear of the burner and pull the burner downwards to disengage the retention tab. Remove the burner to a safe place for inspection and cleaning.
2. Remove the fixing screws and swing the control box down into the servicing position. Refer to Frame 53.
3. Remove the hot surface igniter securing screw and disengage from the combustion chamber.
4. Unplug the hot surface igniter lead from printed circuit board and withdraw it from the control box.
5. Remove the 4 screws retaining the air box/pilot assembly to the vertical manifold and carefully remove the assembly.

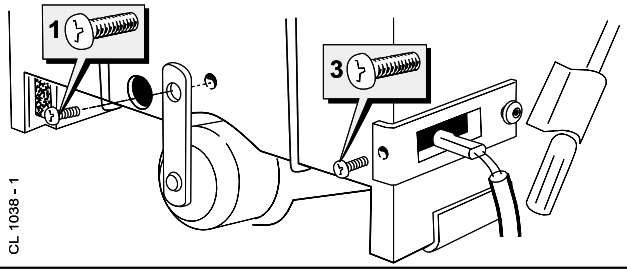


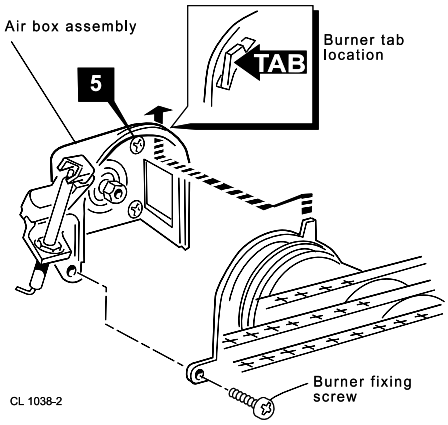

## 47 CLEANING THE FAN ASSEMBLY / THE FLUEWAYS

1. Remove the 2 silicon rubber tubes from the fan sensing points.
2. Disconnect all the fan leads.
3. Undo the M4 thermistor securing screw and remove thermistor from the fan.

**4a. Rear flue**
Slacken the M4 screw securing the flue connector to the fan. Disconnect the connector from the fan and slide into the flue.

**4b. Side or top flue**
Slacken off two M4 screws securing the flue elbow and flue connector. Disconnect the flue connector from the elbow and slide into the flue. Remove the flue elbow.

5. Disconnect the silicon rubber tube from the rear of the collector hood.
6. Slacken the two M5 nuts on the front tie rods, releasing the tie rods from the combustion chamber.
7. Remove the M5 central fixing screw at the rear of the collector hood and remove collector hood/fan assembly.
8. Check that the fan impeller runs freely. Remove any debris from the impeller with a soft brush.
9. Remove the flue baffles.

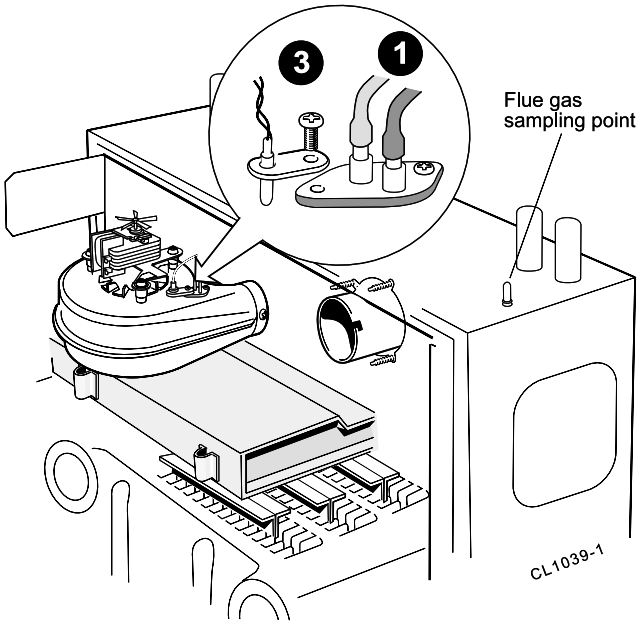


10. Remove all loose deposits from the heat exchanger, particularly between the fins, using a suitable brush.

## 48 CLEANING THE BURNER, IGNITER AND PILOT ASSEMBLY

1. Brush off any deposits that may have fallen on to the burner head (ensuring the flame ports are unobstructed) and remove any debris that may have collected.
   **Note.** *Brushes with metallic bristles must not be used.*
2. Remove the main burner injector and ensure there is no blockage or damage. Clean or renew as necessary.
3. Refit the injector, using an approved jointing compound sparingly.
4. Inspect the pilot burner and detection electrode. Ensure that they are clean and in good condition.
5. Inspect the hot surface igniter and ensure it is in good condition.

Check that:

a. The pilot burner injector is not blocked or damaged. Refer to Frame 55 for removal details.
b. The pilot burner is clean and unobstructed.
c. The detection electrode is clean and undamaged.
d. The detection lead is in good condition.
e. The electrode gap is correct (Frame 55). Clean or renew as necessary.

**Note.** *The pilot shield is located around the pilot assembly bracket and is secured by the electrode retaining nut.*

## 49 RE-ASSEMBLY

**Re-assemble the boiler in the following order.**

1. Refit the flue baffles.
2. Inspect the collector hood rope gasket and replace, if necessary, ensuring that the self adhesive rope is fitted centrally on to the lip of the collector hood / fan assembly. The boiler efficiency will be adversely affected if incorrectly fitted. Refit the collector hood and retain with the 2 front tie rods and the rear central fixing screw. Tighten the nuts and screw. Ensure that the sealing gasket is compressed. Refit the pressure pipe.
3. Refit the positive pressure tubes on the top of the fan housing. Reconnect the electrical leads.
4. Refit the thermistor.
5. Refit the air box assembly and burner. Ensure that the burner front fixing is refitted.
6. Reconnect the gas supply and the electrical wiring.
7. Check the sightglass in the boiler casing. Clean or renew as necessary. Refer to Frame 55.
8. Check for gas soundness. Check the gas service cock and pressure test point.
9. Refit the boiler casing (Refer to Frame 40). Note that it is not necessary to disturb the controls casing pod.
10. Close the controls door.

## 50 GAS PRESSURE ADJUSTMENT

### PILOT

The pilot is factory set to maximum and no further adjustment is possible. If, after removing and checking the injector (as detailed in Frame 48) and ensuring that there is an inlet pressure of 20 mbar available, the pilot does not light then contact **British Gas Services.**

Relight in accordance with 'Initial Lighting', Frame 40.

### MAIN BURNER

After any servicing, reference should be made to Table 2 which quotes details of the rated output with the related burner setting pressure and the heat input. Any required adjustments should be made by using the pressure adjustment screw.

Refer to 'Initial Lighting', Frame 40.

# REPLACEMENT OF PARTS

## 51 GENERAL

**When replacing any component:**

1. Isolate the electricity supply.
2. Turn OFF the gas supply.
3. Remove the boiler casing. Refer to Frame 45.

**IMPORTANT.** When work is complete the casing must be correctly refitted, ensuring that a good seal is made.

The original routing of the wires must be adhered to when replacing electrical components.

**The boiler MUST NOT be operated if the casing is not fitted.**

## 52 SIGHTGLASS REPLACEMENT

1. Refer to Frame 51.
2. Unfasten the 2 nuts and washers holding the sightglass assembly to the casing front panel.
3. When fixing the new assembly ensure that the parts are in the correct order. The frame must have the return edge at the bottom.
4. Retighten the 2 nuts to ensure an airtight seal. Do NOT overtighten.
6. Replace the boiler casing.

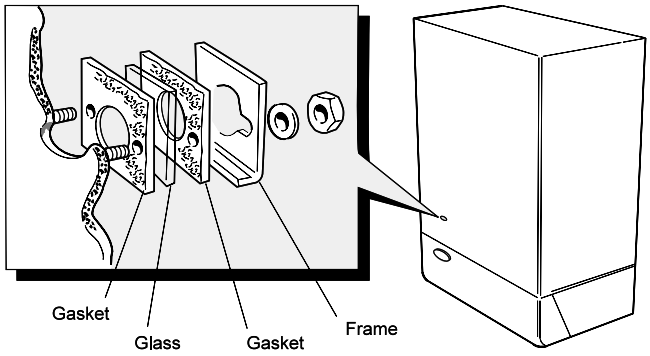


## 53 OVERHEAT THERMOSTAT REPLACEMENT

1. Refer to Frame 51.
2. Remove the control box fixing screws.
3. Swing the control box down into the servicing position.
4. Pull off the electrical connections at the thermostat.
5. Unclip the capillary from the back panel.

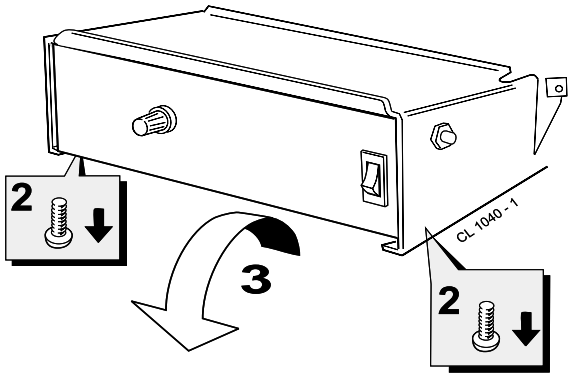


6. Undo the sensor retaining screw and withdraw the sensor from the pocket.
7. Remove the thermostat retaining nut and with draw the thermostat from the control box..

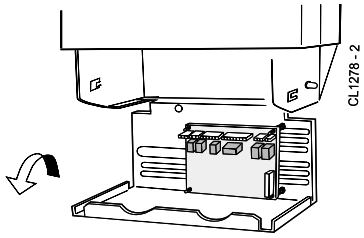


8. Fit the new thermostat and reassemble in reverse order.
9. Check the reset button on the new thermostat is pressed in.
10. Check the operation of the boiler.

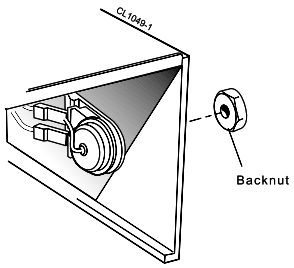

## 54 CONTROL POTENTIOMETER, THERMISTOR SENSOR LEADS and RESET SWITCH REPLACEMENT

Refer to Frame 51.

**A.** Remove the fixing screws.

**B.** Swing the control box down into the servicing position.

**Control potentiometer**

1. Pull the knob off the shaft.
2. Remove the backnut securing the control potentiometer to the control box.
3. Unplug the Molex connector from the printed circuit board.
4. Replace and re-assemble in reverse order.

**Thermistor sensor lead assembly**

5. Unplug the sensor Molex connector from the printed circuit board and withdraw through the rear of the control box.
6. Remove the 2 sensors from the heat exchanger.
7. Remove the thermistor from the fan.
8. Unclip the harness from the back panel.
9. Remove the bush in bottom of the back panel and pass the sensors through the hole .
10. Replace and re-assemble in reverse order.

**Reset switch**

11. Disconnect the electrical leads from the rear of the switch.
12. Press in the 2 side retaining clips and remove the switch.
13. Replace and re-assemble in reverse order.
14. Check the operation of the boiler.

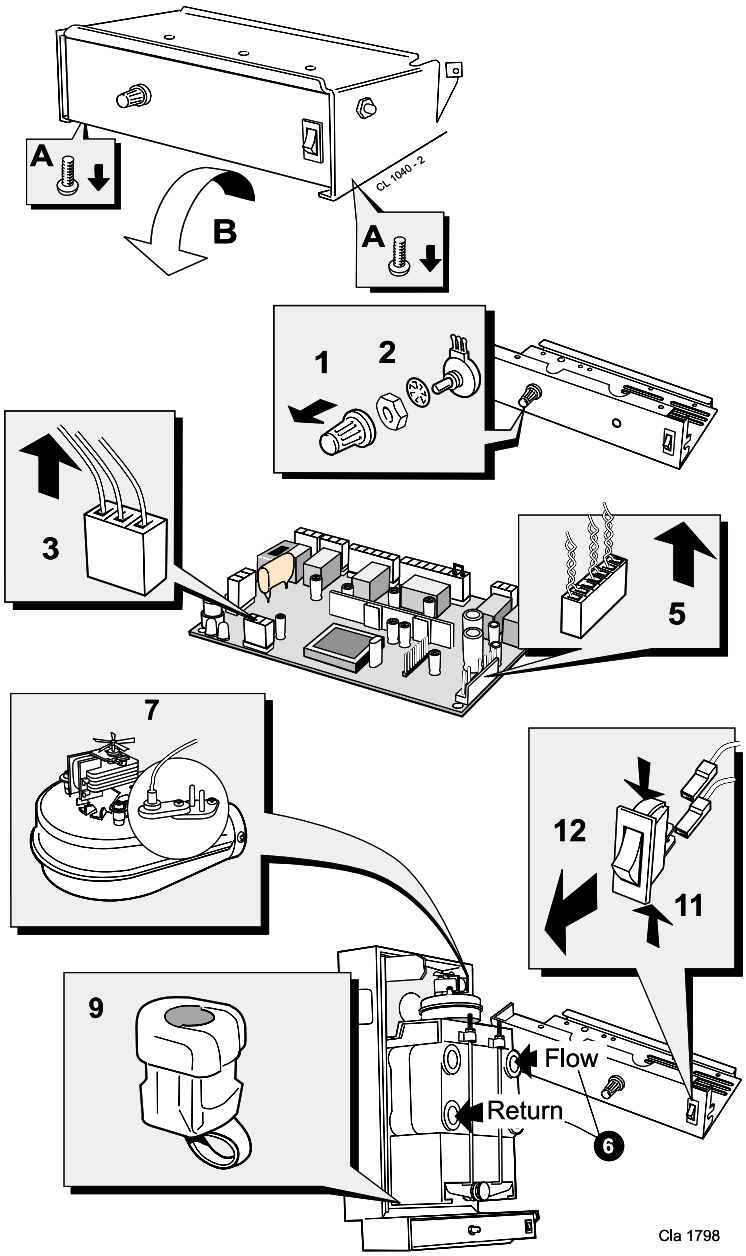


## 55 PILOT BURNER REPLACEMENT

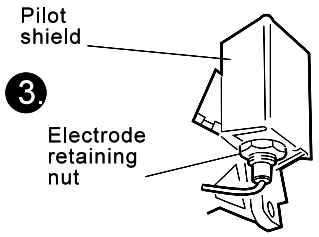


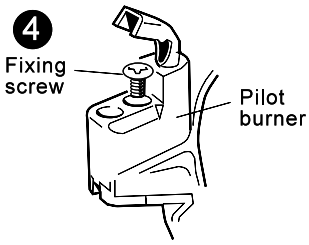


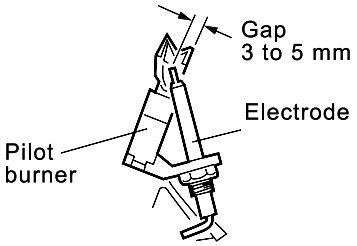


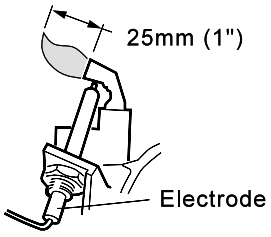


1. Refer to Frame 51.
2. Remove the burner and air box assembly. Refer to Frame 46.
3. Remove the electrode retaining nut and remove the pilot shield and electrode.
4. Unscrew the central pilot fixing screw and lift the pilot clear of the pilot injector. The pilot injector may now be unscrewed if required.
5. Replace the pilot burner (injector if necessary) and retain with the M4 screw previously removed. Ensure that the copper sealing washer is replaced when refitting the pilot injector.
6. Replace the electrode and pilot shield, retaining both with the electrode nut. Check the gap.
7. Reassemble in reverse order.
8. Check the operation of the boiler.
9. The pilot is factory set to maximum and no further adjustment is possible. Ensure that there is an inlet pressure of 20 mbar available.

## 56 DETECTION ELECTRODE AND LEAD REPLACEMENT

1. Refer to Frame 51.
2. Remove the burner and air box assembly. Refer to Frame 46.
3. Remove the electrode retaining nut.
4. Remove the pilot shield.
5. Remove the electrode and integral lead.
6. Fit the new electrode and lead, ensuring that the pilot shield is replaced and reassemble in reverse order.
7. Check the operation of the boiler.

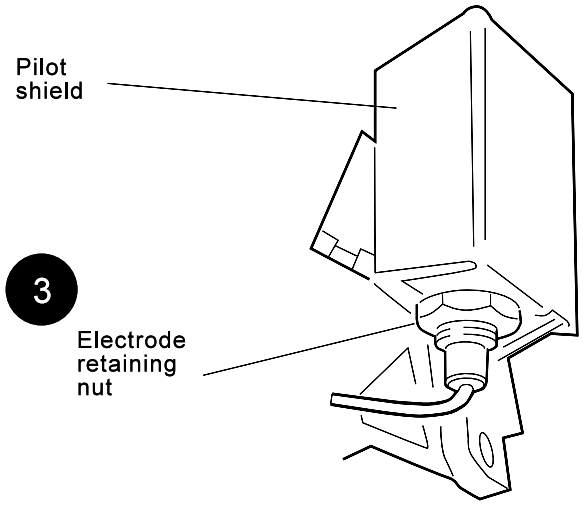


## 57 HOT SURFACE IGNITER (HSI) REPLACEMENT

1. Refer to Frame 51.
2. Remove the fixing screws. Swing the control box down into the servicing position.
3. Disconnect the HSI lead from the PCB and withdraw it from the control box.
4. Remove the securing screw and disengage the HSI mounting bracket from the combustion chamber.
5. Remove the securing screw and withdraw the HSI from the bracket.
6. Fit the new HSI and re-assemble in reverse order.
7. Check the operation of the boiler.

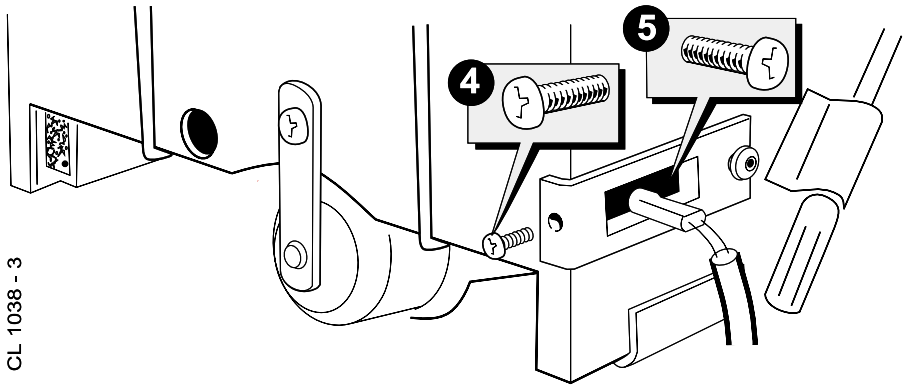


## 58 MAIN BURNER AND MAIN BURNER INJECTOR REPLACEMENT

1. Refer to Frame 51.
2. Remove the screw retaining the front burner support strap to the combustion chamber.
3. Remove the M5 pozi screw, situated at the left hand bottom rear of the burner. Pull the burner downward to disengage the retention tab and remove the burner.
4. At this stage the main burner injector can be removed, checked, cleaned or replaced as required. Ensure that an approved jointing compound is used sparingly.
5. Fit the new burner, ensuring that the retention tab is correctly located in the air box slot and re-assembly in reverse order.
6. Check the burner for cross-lighting and flame stability.

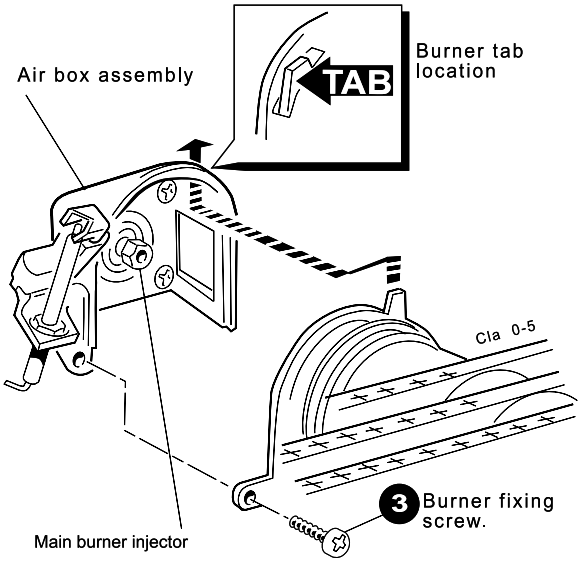

## 59 COMBUSTION CHAMBER INSULATION REPLACEMENT

1. Refer to Frame 51.
2. Remove the burner and air box assembly and igniter. Refer to Frame 46.
3. Remove the 4 tie rods.
4. Remove the combustion chamber.
5. Remove the 2 side panel retaining brackets.
6. Remove the side insulation panels.
7. Remove the front and rear insulation panels.
8. Fit the new front and rear insulation panels.
9. Fit the new side panels ensuring the cut out is on the correct side and retain with the brackets and screws previously removed.
10. Re-assemble in reverse order.
11. Check the operation of the boiler.

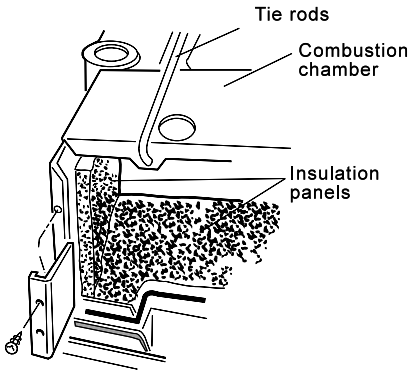


## 60 FAN REPLACEMENT

1. Refer to Frame 51
2. Remove the 2 silicon rubber tubes from the fan sensing points.
3. Disconnect all the fan leads.
4. Remove the M4 screw securing the thermistor and remove from the fan.

5a. **Rear flue.** Slacken the M4 screw securing the flue connector to the fan. Disconnect the connector from the fan and slide into the flue.

5b. **Side or top flue.** Slacken off two M4 screws securing the flue elbow and flue connector. Disconnect the flue connector from the elbow and slide into the flue. Remove the flue elbow.

6. Disconnect the silicon rubber tube from the rear of the collector hood.
7. Slacken the two M5 nuts on the front tie rods, releasing the tie rods from the combustion chamber.
8. Remove the M5 central fixing screw at the rear of the collector hood and remove collector hood / fan assembly.
9. Remove the three M4 screws retaining the fan to the collector hood.
10. Fit the new fan and re-assemble in reverse order, ensuring the fan leads, and 3 sensing tubes are reconnected.

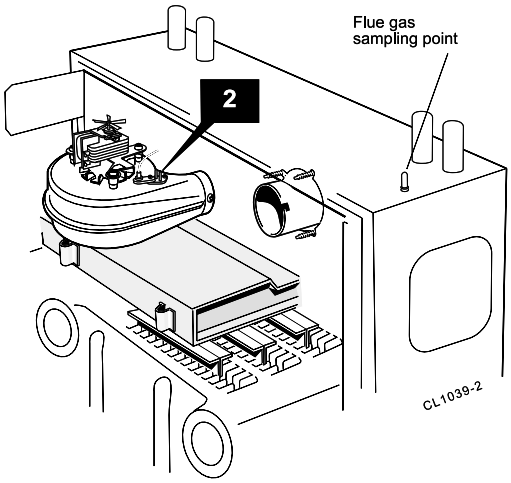


11. Check the operation of the boiler.

## 61 AIR PRESSURE SWITCH (APS) REPLACEMENT

1. Refer to Frame 51.
2. Remove the APS fixing screw.
3. Remove both sensing tubes from the APS.
4. Remove the 3 electrical connections from the APS.
5. Fit the new APS and re-assemble in reverse order.
6. Check the operation of the boiler.

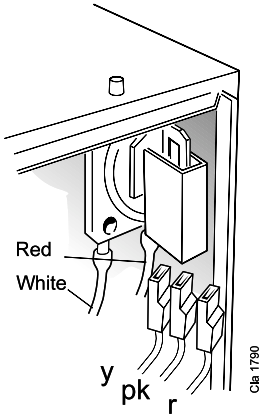


## 62 PRINTED CIRCUIT BOARD (PCB) REPLACEMENT

**IMPORTANT.**
Any failure indicating a PCB fault should be confirmed before replacing the PCB by ensuring that all electrical plug connections are correctly made (check pin alignment) and secure.

**Note.** *Refer to Frame 68 of 'Exploded Views' for illustration of the procedure detailed below.*

1. Refer to Frame 51.
2. Remove the fixing screws and swing the control box down into the servicing position.
3. Disconnect the detection lead from the PCB.
4. Unplug all the Molex connectors from the PCB.
5. Disengage the PCB from the mounting posts and withdraw from the control box.
6. Fit the new PCB and re-assemble in reverse order.
7. Check the operation of the boiler.

**Fuse.**
To change the fuse, prise the top off the holder and disengage the fuse. Refer to Frame 32 for fuse location.

## 63 GAS CONTROL VALVE REPLACEMENT

**Note.** *Refer also to Frame 67 of 'Exploded Views' for illustration of the procedure detailed below.*

1. Refer to Frame 51.
2. Remove the burner and air box assembly. Refer to Frame 46.
3. Remove the fixing screws.
   Swing the control box down into the servicing position.
4. Disconnect the gas control valve electrical leads.
5. Undo the gas cock union .
6. Whilst supporting the gas control valve, remove the 2 screws retaining the manifold to the back panel.
7. Remove the gas control / manifold assembly.
8. Remove the 4 screws retaining the manifold to the gas control valve, and fit the manifold to the new valve. Ensure that the new control is fitted the correct way round (an arrow engraved on back indicates the direction of flow).
9. Transfer the gas cock union to the new gas control valve, using an approved jointing compound.
10. Re-assemble in reverse order.
11. Check the operation of the boiler.



## 64 HEAT EXCHANGER REPLACEMENT

**Note.** *Refer to Boiler assembly - Exploded view (Frame 6).*

1. Refer to Frame 51.
2. Remove the burner / air box and ignition assembly. Refer to Frame 46.
3. Drain the system.
4. Disconnect the water connections. If compression fittings are used then cut the pipes both above and below the fittings in order to allow the heat exchanger assembly to be removed. Remove the heat exchanger drain plug and drain the residual water into a suitable receptacle.
5. Remove the fan / collector hood assembly.
   Refer to Frame 47.
6. Remove the combustion chamber. Refer to Frame 59.
7. Remove the overheat thermostat sensor (if fitted) from the pocket on the heat exchanger by removing the M3 screw and plate.
8. Remove the flow and return thermistor sensors. Refer to Frame 54.
9. Slacken 3 turns only the 4 heat exchanger / inter-panel retaining screws.
10. Lift the heat exchanger / inter-panel assembly upward and forward to disengage key hole fixings. Pull the assembly downwards to clear the water pipes from the back panel.
11. Remove the 4 rubber sealing grommets from the top of the back panel to facilitate fitting the new assembly.
12. Fit the new heat exchanger assembly, complete with water pipes, and hang it on the key hole slots and screws. Retighten the screws.
13. Replace the rubber sealing grommets.
14. Re-assemble in reverse order, replacing any damaged or deteriorating rope seals and routing electrical wiring as previously.
15. Remake all water connections, ensuring that the compression fittings (if used) are correctly refitted.
16. Fully test all functions, including water and gas soundness.

## 65 CASING SEAL REPLACEMENT

1. Refer to Frame 51.
2. Remove the old seal from the casing surround and thoroughly clean the casing surfaces.
3. Fit the new self adhesive seals.
4. Replace the boiler casing.

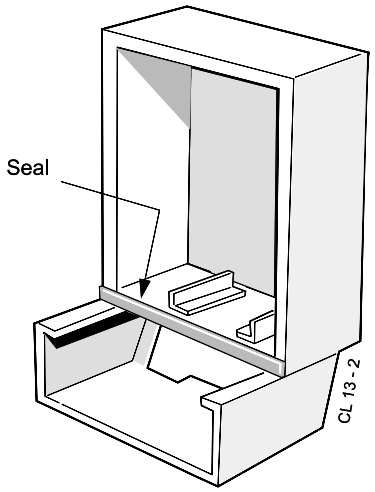


*Model 100 does not have air deflector baffles fitted to jacket bottom.*

# FAULT FINDING

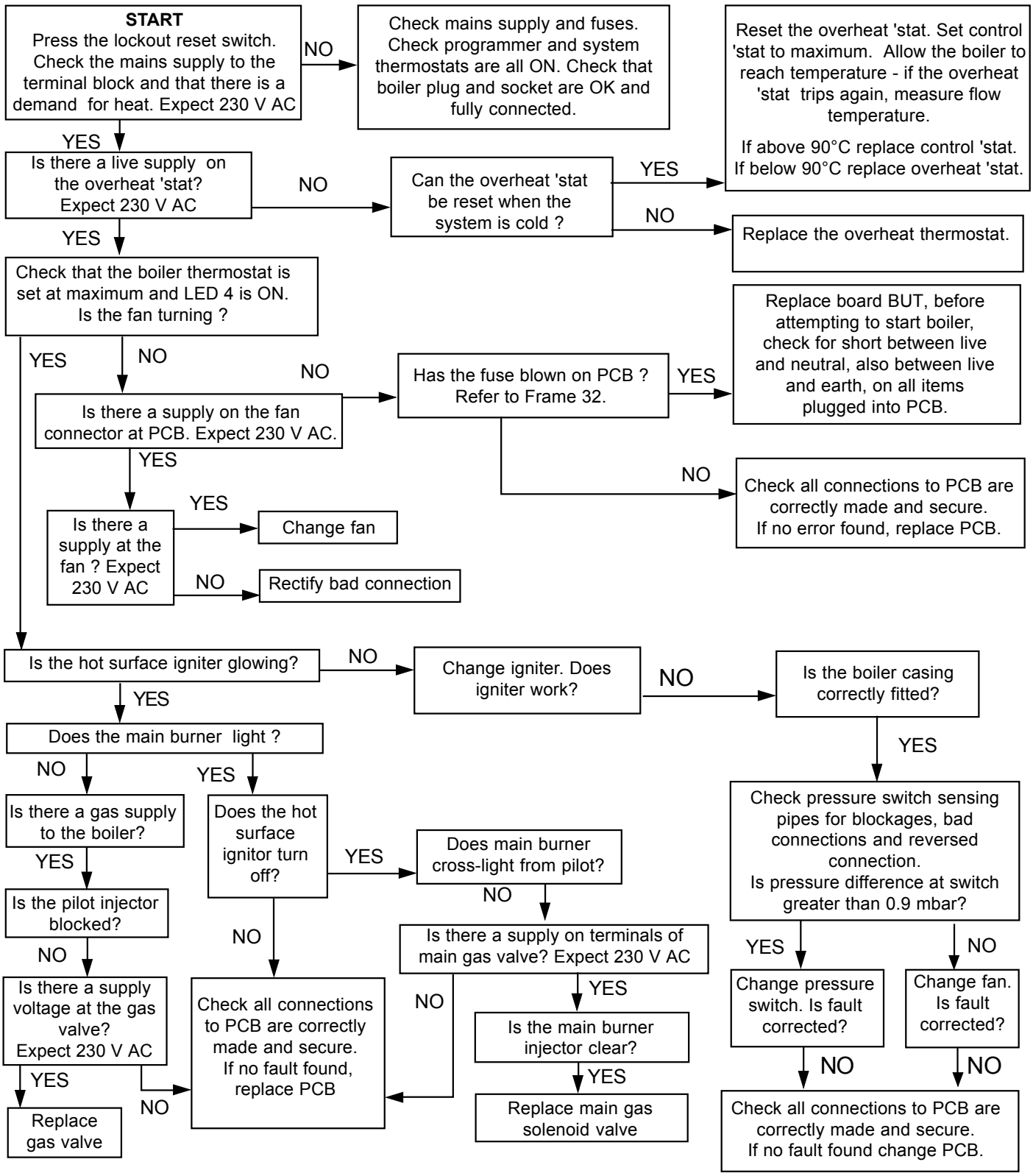


| Component | LED 3* | LED 4* |
|---|---|---|
| Application of power. | Flash > 1/sec in sync with LED 4 | Flash > 1/sec in sync with LED 3 |
| Control 'stat open circuit or waiting for demand. | On. | On. |
| Fan start up. | Off. | Flash > 1/sec |
| Run. | Off. | On. |
| Pump over-run. | On | Off. |
| Lock-out. | Flash < 1/second. | Off. |
| Sensor Faults | Flash > 1/second. | Off. |
| Reverse polarity. | Flash > 1/sec alternately with LED 4. | Flash > 1/sec alternately with LED 3. |

* Refer to Frame 68

# SHORT LIST OF PARTS

The following are parts commonly required due to damage or expendability. Their failure or absence is likely to affect safety or performance of this appliance.

The list is extracted from the British Gas List of Parts, which contains all available spare parts.

The full lists is held by **British Gas Services,** British Gas distributors and merchants.

When ordering spares please quote:

1. Boiler Model
2. Appliance G.C. Number
3. Description
4. Quantity
5. Product Number

| Key No. | GC Part No. | Description | | Qty. | Product No. |
|---|---|---|---|---|---|
| 9 | 308 365 | Sightglass assembly kit | | 1 | 079602 |
| 12 | | Main burner | | | |
| | E58-656 | AEROMATIC No.AC 19/123301 | 30 & 40 | 1 | 154 017 |
| | E58-657 | AEROMATIC No.AC 19/123302 | 50 & 60 | 1 | 154 018 |
| | E58-658 | AEROMATIC No.AC 19/123303 | 70,80 & 100 | 1 | 154 019 |
| 13 | | Main burner injector | | | |
| | E58-662 | Stereomatic 2.7mm; | 30 | 1 | 155 615 |
| | E37-218 | Stereomatic 2.9mm; | 40 | 1 | 153 885 |
| | E37-219 | Stereomatic 3.3mm; | 50 | | 153 886 |
| | 398-058 | BRAY Cat. 10 - size 1600; | 60 | 1 | 003 362 |
| | 389 588 | BRAY Cat. 10 - size 1850; | 70 | 1 | 111990 |
| | 398 065 | BRAY Cat. 10 - size 2300; | 80 | 1 | 004760 |
| | | Aeromatic Pt. No. 939021, 4.6mm; | 100 | 1 | 152320 |
| 13A | E37-218 | Copper washer, (for Stereomatic injectors); | | 1 | 152426 |
| 14 | 397 943 | Pilot burner injector: HONEYWELL 4580 1075002 ; | 30-80 | 1 | 004982 |
| | 386 131 | Pilot burner injector: HONEYWELL 4580 1075001 ; | 100 | 1 | 004 981 |
| 15 | 308 358 | Pilot burner head Q359A with: | | | |
| | 308-358 | Honeywell 4580 1075002 injector | 30-80 | 1 | 079599 |
| | 308-347 | Honeywell 4580 1075001 injector | 100 | 1 | 079590 |
| 17 | E25-841 | Gas valve kit VR 4601AA1036, 230 V | | 1 | 075698 |
| 18 | 308 317 | Detection electrode complete with lead and backnut 410 mm lg. | | 1 | 111881 |
| 18A | E58-754 | Hot surface igniter - PACTROL No. 98036 | | 1 | 152 802 |
| 19 | E58-681 | Control box assembly, including thermostat, knob, PCB, potentiometer and lockout reset switch | | 1 | 155 382 |
| 21A | E58-714 | Boiler thermostat potentiometer | | 1 | 152 585 |
| 23A | 386 149 | Automatic ignition PCB : PACTROL PCB No.42 (with modem PCB No.43) | | 1 | 152 800 |
| 26 | 308 283 | Thermostat knob | | 1 | 079601 |
| 24 | 385 861 | Pressure switch: HONEYWELL C6065F1373 | | 1 | 155 412 |
| 25A | E58-686 | Thermistor sensor harness | | 1 | 152636 |
| 30 | E02-661 | Fan assembly: SIFAN No.WFFB 0221-039 | 30-80 | 1 | 151586 |
| | E06-031 | SIFAN No.WFFB 0226-028 | 100 | 1 | 152315 |
| 35 | E04-503 | Boiler casing assembly complete with sightglass assy, insulation & M5 x 16 dogpoint pozi pan hd.. | 30-80 | 1 | 075391 |
| | E06-032 | | 100 | 1 | 075523 |
| 37 | 308 541 | Controls casing door with Lighting Instructions | | 1 | 155 383 |
| 39 | E04-504 | Casing seal pack complete with screws | | 1 | 075392 |
| 45 | 386 144 | Overheat thermostat, RANCO LM7 P 8508 | | 1 | 113200 |
| 58A | | Lockout reset switch | | 1 | 155 426 |

## 66 SHORT PARTS LIST

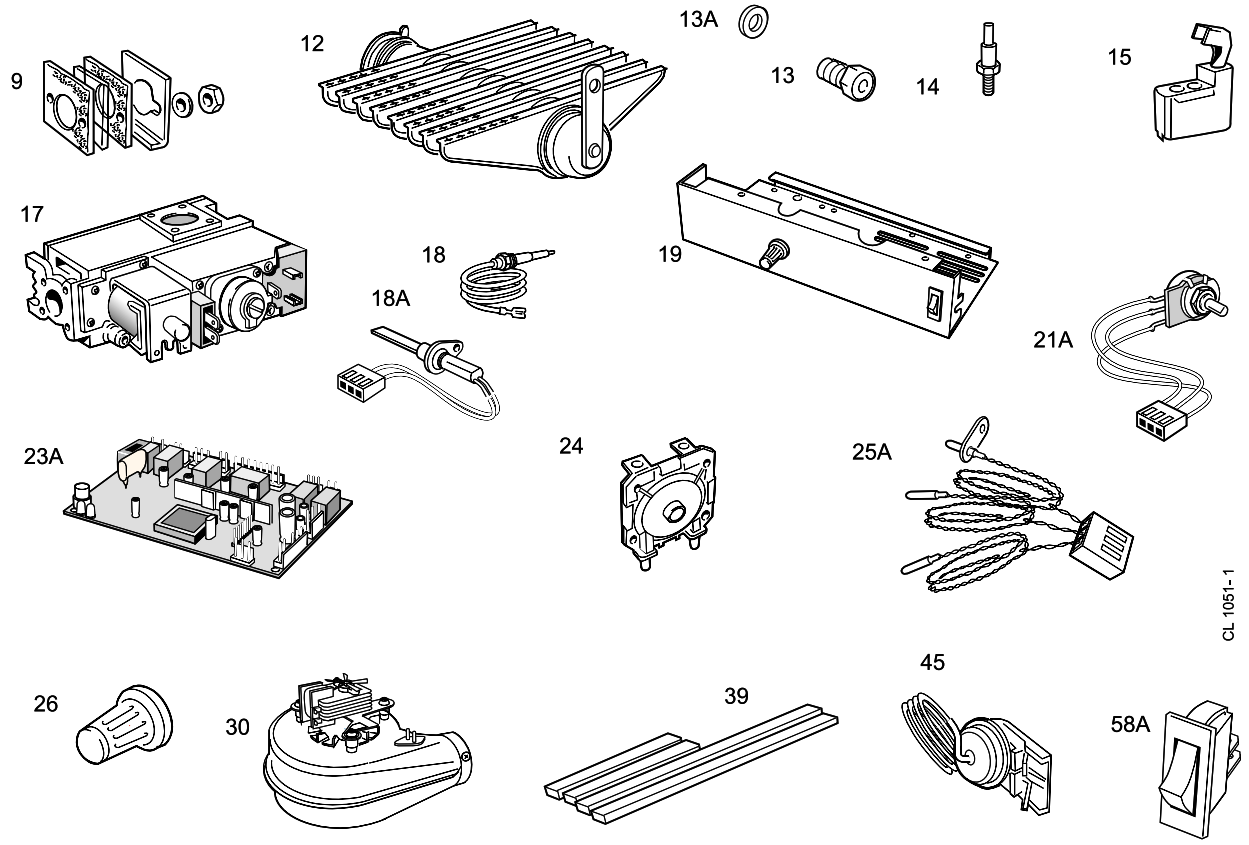


## 67 BURNER ASSEMBLY - Exploded View

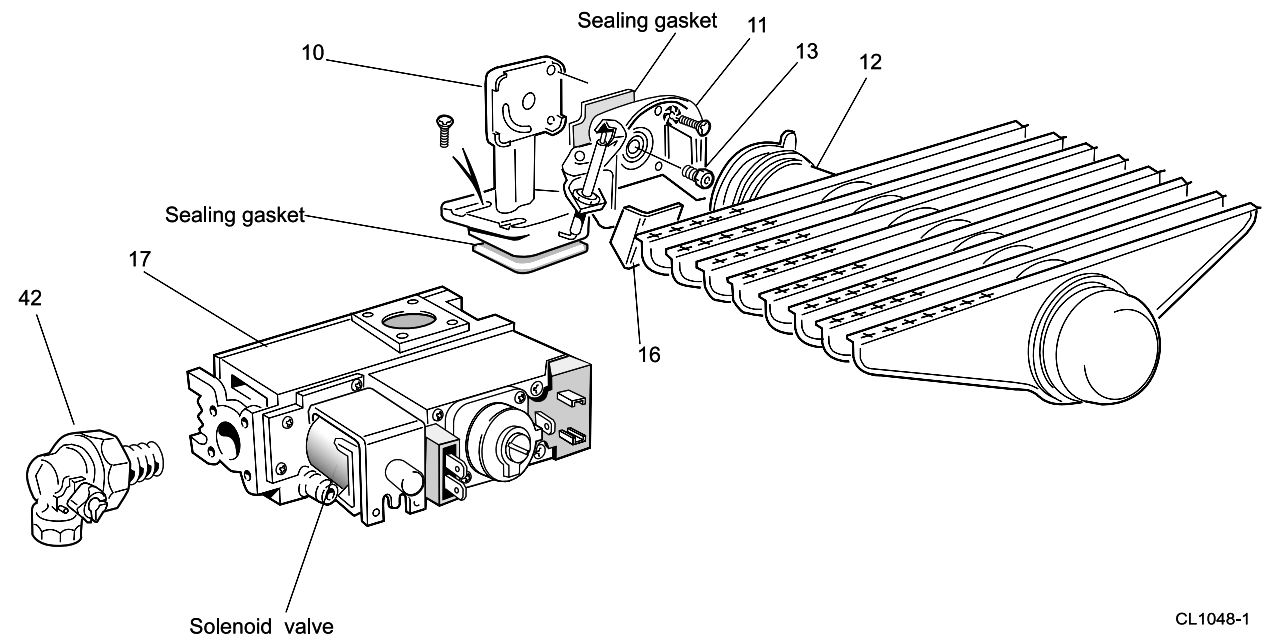


**LEGEND**

(Numbers up to 51 relate to the B.G. spares list)

**10.** Burner manifold

**11.** Air box and pilot assembly.

**12.** Main burner.

**13.** Main burner injector.

**16.** Pilot shield.

**17.** Gas control valve.

**42.** Gas service cock.

## 68 CONTROL BOX - Exploded View

**LEGEND**

**19.** Control box.

**21A.** Thermostat potentiometer.

**26.** Thermostat knob.

**23A.** Printed circuit board.

**58A.** Lockout reset switch.

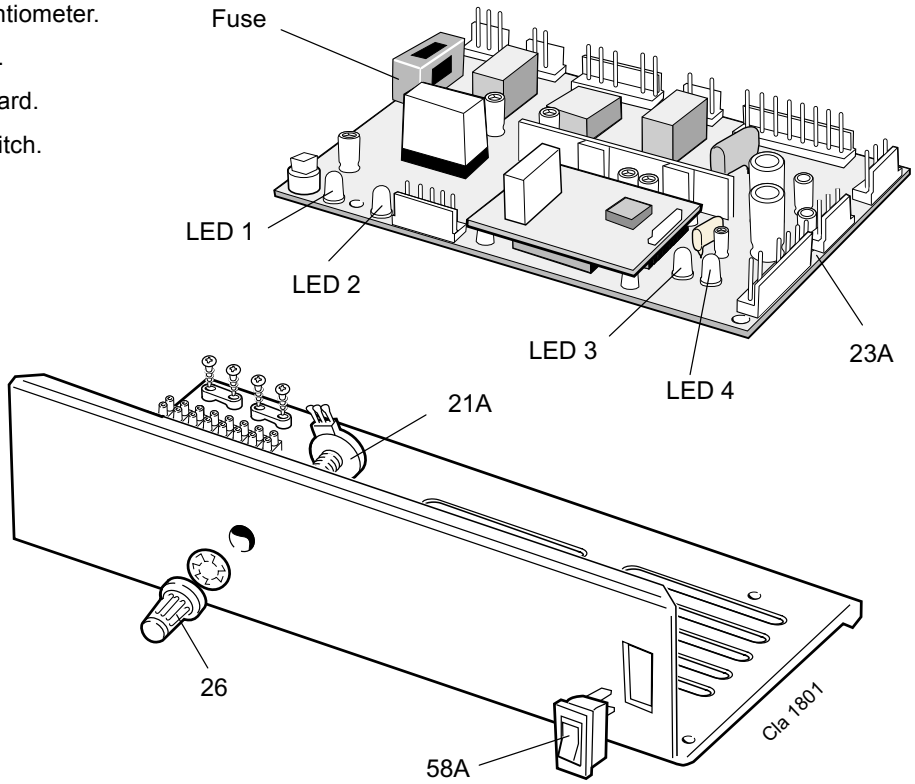


## 69 BOILER CASING ASSEMBLY

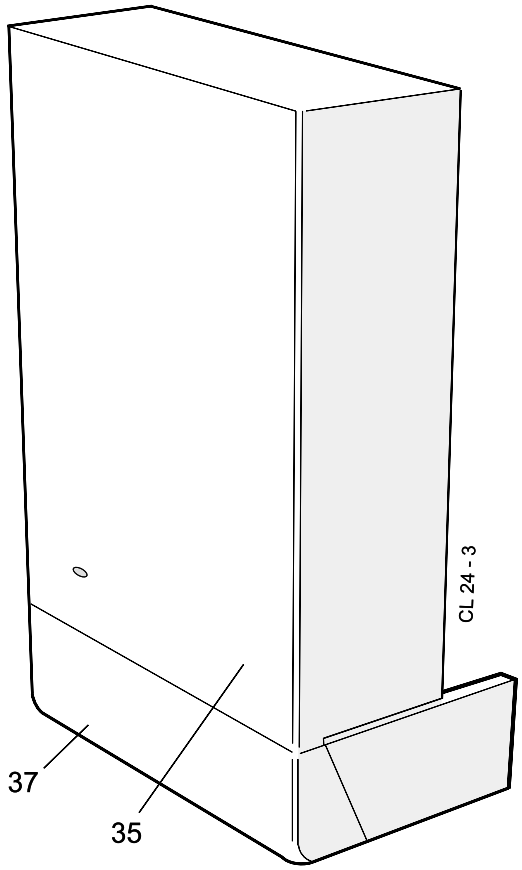

**This boiler is exclusively manufactured for British Gas by Ideal Boilers Ltd.**

benchmark™

***The code of practice for the installation, commissioning & servicing of central heating systems***

**THIS SYMBOL IS YOUR ASSURANCE OF QUALITY**

These appliances are designed for use with Natural Gas only. They have been tested and conform with the provisions of BS. 6332 and BS. 5258.

CERTIFIED PRODUCT
Manufactured under a BS EN ISO 9001: 1994 Quality System accepted by BSI

**British Gas Services Limited.** Registered in England No. 3141243. Registered Office: Charter Court 50 Windsor Road, Slough, Berkshire SL1 2HA. British Gas Services Ltd. has made every effort to ensure that the information contained in this leaflet is accurate. However, not all the information is within the control of British Gas Services Ltd., and it may have changed since publication. **British Gas Services Ltd**. does not accept any liability for changes which occur after publication. No guarantee takes away any rights you may have at law. Calls to this number may be monitored to maintain a high level of service and for training purposes.

**British Gas** pursues a policy of continuing improvement in the design and performance of its products. The right is therefore reserved to vary specification without notice.

May 2001 UIN 154 270 A03

British Gas

Scottish Gas

***Priority Helpline 08459 500 400***