INSTALLATION & SERVICING MANUAL

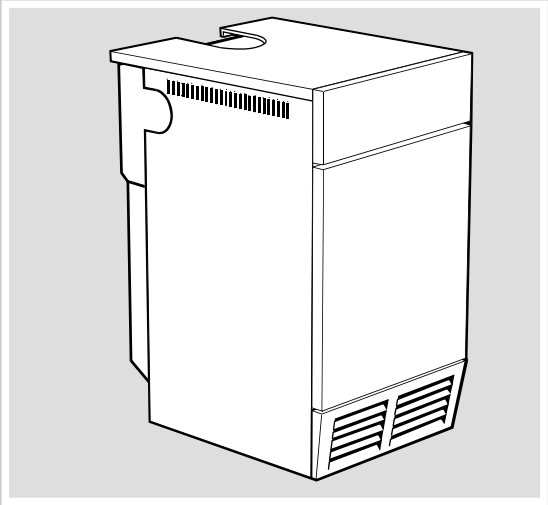

British/Scottish Gas RD2

the floor standing boiler

4100-4125 RD2

Floor standing, gas fired fanned flue boiler

British Gas

Scottish Gas

Installers guide to central heating boilers

British Gas:

(Any internal reference to British Gas applies equally to Scottish Gas)

The British Gas RD2 is a range of cast iron floor standing gas central heating boilers. A complete range of natural gas models is available.

The ideal replacement boiler...

Easy to install, easy to operate and easy to service. The British Gas RD2 really is the ultimate replacement floor standing range - you can depend on it.

Proven reliability...

Proven cast iron heat exchanger engineered and refined to be the most dependable floor standing boiler ensuring totally calm operation and quiet running, whatever the system demands.

Complete range...

There are 7 models in the range. All models include an overheat thermostat and a Flue Directional kit for side and top outlet installations.

Full system suitability...

All models are suitable for connection to pumped open vent central heating systems, pumped central heating combined with pumped or gravity indirect domestic hot water supply systems. They can also be used on sealed water systems.

Free Three Star Service Cover:

In addition to the guarantee, we will provide absolutely free a British Gas Services Three Star Service Cover agreement to cover your complete new system during the first year. The benefits of this cover include priority attention and a 24 hours a day 365 days a year helpline. Full details of the terms and conditions for Three Star Cover schemes are available separately on request.

GENERAL

Table 1 - General Data

Boiler Size			4100	4125
Gas Supply Connection		in. BSP	Rc 1/2 (1/2)	
Number of Boiler Sections			4	5
Flow and Return Connections			Rc 1 (1" BSP)	
MAXIMUM Static Water Head		m (ft.)	30.5 (100) (3 bar)	
MINIMUM Static Water Head		m (ft.)	1.0 (3.3)	
Electrical Supply		(Power Consumption)	230 V ~ 50 Hz (150 W)	
Fuse Rating			External 3 A	Internal 2A to BS4265
Water Content		litre (gal.)	9.8 (2.1)	12.2 (2.7)
Dry Weight		kg. (lb.)	113 (249)	136 (300)
Boiler Size	Height	mm (in.)	850 (33.5)	
	Width	mm (in.)	440 (17.4)	
	Depth	mm (in.)	533 (21.0)	600 (23.6)
Gas Type			Natural 2 H	
Gas Supply Pressure			20 mb	
Flue duct diameter		mm (in.)	100 (4.0)	
Flue duct length (max)		m (ft)	2 (6.5)	1 (3.25)

Table 2 - Performance Data

Boiler Size			4100	4125
Boiler Input	Nett CV	kW (Btu/h)	32.6 (111 200)	40.7 (138 900)
	Gross CV	kW (Btu/h)	36.2 (123 500)	45.2 (154 200)
	Gas Consumption	l/s (ft.^{3}/h)	0.94 (119.0)	1.17 (148.6)
Boiler Output to Water		kW (Btu/h)	29.3 (100 000)	36.6(125 000)
Burner Setting Pressure (hot)		mbar (in w.g.)	11.6 (4.6)	12.7 (5.1)
Seasonal Effiiciency (SEDBUK)*		Band D	[78.8]%	[78.5]%

* The value is used in the UK Government's Standard Assessment Procedure (SAP) for energy rating of dwellings. The test data from which it has been calculated have been certified by BG plc 0087.

Note.
Gas consumption is calculated using a calorific value of 38.7 MJ/m^3 (1038 Btu/ft^3) gross or 34.9 MJ/m^3 (935 Btu/ft^3) nett. To obtain the gas consumption at a different calorific value:-

a. *For l/s - divide the gross heat input (kW) by the gross C.V. of the gas (MJ/m^3)*

b. *For ft^3/h - divide the gross heat input (Btu/h) by the gross C.V. of the gas (Btu/ft^3)*

c. *The appliance is preset at the factory to the nominal rating.*

Key to symbols

GB = United Kingdom (Countries of destination)

PMS = Maximum operating pressure of water

C_{12} = A room sealed appliance designed for connection via ducts to a horizontal terminal which admits fresh air to the burner and discharges the products of combustion to the outside through orifices which, in this case, are concentric. The fan is down stream of the combustion chamber.

I_{2H} = An appliance designed for use on 2nd Family gas, Group H only.

CAUTION. To avoid the possibility of injury during the installation, servicing or cleaning of this appliance, care should be taken when handling edges of sheet steel components.

CONTENTS

Air Supply 7
Boiler Assembly - Exploded view 12
Boiler Clearances 6
Electrical Connections 23
Electrical Diagrams ..... 23 - 26
Electrical Supply 8
Extension Ducts - Fitting 21
Fault Finding 38
Flue Fitting 15-20
Flue Installation 7
Gas Safety Regulations 5
Gas Supply 7
Initial Lighting 27
Installation 12
Mandatory Requirements 5-7
Pump Systems 9
System Diagrams (Electrical) 25
Terminal Guards 7
Water Connections ..... 5, 15 & 22
Water Circulation 8
Water Systems 9

BENCHMARK LOG BOOK DETAILS

Boiler	**Page**
Make and model	4
Appliance Serial No. on Data Badge	9
Controls	as applicable
For all boilers	
Flushing to BS.7593	8
Inhibitor	8
Gas inlet working pressure	6
Burner operating pressure	3
Heat input	to be calculated
Temperature differential	measure and record
For combination boilers only	Not applicable
For domestic hot water mode	Not applicable
For condensing boilers	Not applicable

For all boilers: *complete, sign & hand over to customer*

For assistance see Technical Helpline on the back page

British Gas RD2

4100 RD2	G.C. No. 41 392 72
4125 RD2	G.C. No. 41 392 73

Natural Gas only — Appliance type: C_{12}
Certified - P.I. No. 87BL30 — Destination Countries: GB.

INTRODUCTION

British Gas RD2 above range is of floor standing, fanned flue gas boilers. They are rated to provide central heating outputs of 29.3 kW (100,000 Btu/h) to 36.6 kW (125,000 Btu/h).

The boiler has a cast iron heat exchanger and is supplied fully assembled, complete with a white enamelled mild steel casing.

A door at the top of the casing front panel hinges down, revealing the boiler thermostat control.

The boilers are supplied with kits for rear, side and top (100 only) flue outlets.

The boilers are suitable for connection to open-vented systems and sealed water systems.

The systems may be:

- pumped or gravity circulating indirect DHW only
- pumped central heating only
- pumped central heating combined with either a pumped or gravity circulating indirect DHW circuit.

The diagnostic controls within the boiler are capable of communicating key operational data to a central computer data processing system via the house ring main and public telephone system known as Remote Appliance Diagnostic System (or RADS).

RADS can identify actual failure, or predict imminent failure of components and specify the corrective procedures to the British Gas Service Engineer.
To enable the system to operate, a remote mounted interface (Gateway) is required to receive and transmit data from the boiler.
Without this facility, the boiler operates as standard fanned flued boiler.

OPTIONAL EXTRA KITS

Extension Duct kit To extend standard flue.
90° Flue Elbow Kit

NOTE TO THE INSTALLER: LEAVE THESE INSTRUCTIONS ADJACENT TO THE GAS METER. ALSO COMPLETE THE BENCHMARK LOG BOOK AND GIVE THIS TO THE CUSTOMER.

benchmark™

GAS SAFETY

Current Gas Safety (Installation and Use) Regulations, or the rules in force.

It is law that *all* gas appliances are installed by a CORGI registered installer in accordance with the above regulations. Failure to install appliances correctly could lead to prosecution. It is in your own interest, and that of safety, to ensure the law is complied with.

The installation of the boiler MUST also be in accordance with the latest I.E.E (BS 7671) Wiring Regulations, local building regulations, bylaws of the local water authority, the Building Regulations and Building Standards (Scotland) and any relevant requirements of the local authority.

Detailed recommendations are contained in the following British Standard Codes of Practice:

BS. 6891	Low pressure installation pipes.
BS. 6798	Installation of gas fired hot water boilers of rated input not exceeding 60 kW.
BS. 5449:1	Forced circulation hot water systems (small bore and microbore domestic central heating systems).
BS. 5546	Installation of gas hot water supplies for domestic purposes (2nd Family Gases).
BS. 5440: 1	Flues for gas appliances of rated input not exceeding 70 kW.
BS. 5440: 2	Ventilation for gas appliances of rated input not exceeding 70 kW.
BS 7593	Treatment of water in Domestic Hot Water Central Heating Systems.

Health and Safety Document No. 635.

The Electricity at Work Regulations, 1989.

Manufacturer's notes must NOT be taken in any way as overriding statutory obligations.

IMPORTANT. These appliances are certificated by the BG Technology Certification Services for safety and performance. It is important, therefore, that no external control devices, e.g. flue dampers, economisers etc., are directly connected to these appliances unless covered by these Installation and Servicing Instructions or otherwise recommended by **British Gas** in writing. If in doubt please enquire.

Any direct connection of a control device not approved by **British Gas** could invalidate the certification and the normal appliance warranty. It could also infringe the Gas Safety Regulations and the above regulations or other statutory requirements.

SAFE HANDLING OF SUBSTANCES

Care should be taken when handling the boiler insulation panels, which can cause irritation to the skin. No asbestos, mercury or CFC's are included in any part of this boiler.

LOCATION OF BOILER

The boiler must be installed on a flat and level floor, capable of adequately supporting the weight of the boiler and any ancillary equipment.

The boiler may be fitted on a combustible floor.

Insulation is not necessary, unless required by the local authority.

The boiler must not be fitted outside.

Timber Framed Buildings

If the boiler is to be fitted in a timber framed building it should be fitted in accordance with the Institute of Gas Engineers document IGE/UP/7 : 1998.

1 BOILER WATER CONNECTIONS

1. This appliance is NOT suitable for use in a direct hot water system.
2. The boiler is suitable to be used on a sealed system. **Overheat Thermostat** is fitted as standard.

Dimension	A	B
4100	299mm (11 3/4")	533mm (21")
4125	373mm (14 5/8")	600mm (23 5/8")

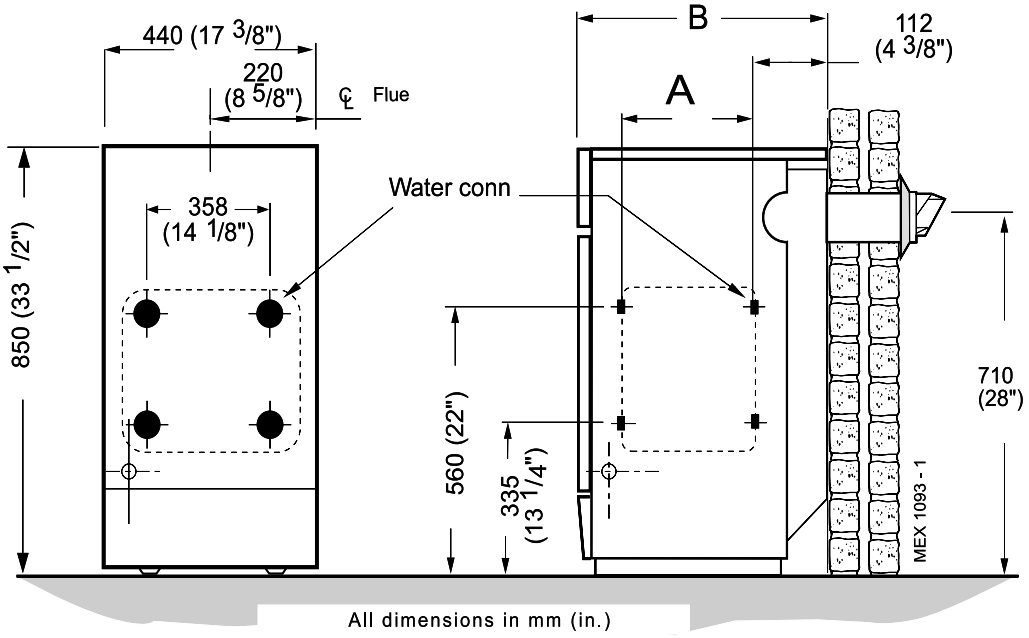

Bathrooms
The boiler may be installed in any room or internal space, although particular attention is drawn to the requirements of the current I.E.E. (BS 7671) Wiring Regulations and, in Scotland, the electrical provisions of the building regulations applicable in Scotland with respect to the installation of the boiler in a room or internal space containing a bath or shower.

Where a room-sealed appliance is installed in a room containing a bath or shower then the appliance and any electrical switch or appliance control utilising mains electricity should be so situated that it cannot be touched by a person using the bath or shower.

Where installation will be in an unusual location, special procedures may be necessary and BS.6798 gives detailed guidance on this aspect.

Compartment Installations
A compartment used to enclose the boiler MUST be designed and constructed specially for this purpose.

An existing cupboard or compartment may be used, providing it is modified for the purpose.

In both cases details of essential features of cupboards/ compartment design, including airing cupboard installation, are to conform to the following:

- BS. 6798.
- The position selected for installation MUST allow adequate space for servicing in front of the boiler and for air circulation around the boiler.

  Side clearance is only necessary for installation. The amount of side clearance will depend upon the type of connection used.
- This position MUST also permit the provision of a satisfactory flue termination.
- For the minimum clearances required for safety, and subsequent service, see Frame 2.

2 FLOOR MOUNTING AND BOILER CLEARANCES

Flammable materials must not be placed in close proximity to the appliance. Materials giving off flammable vapours must not be stored in the same room as the appliance.

Floor mounting
1. The floor must be flat, level and of suitable load bearing capacity.
2. The back of the boiler may be fitted up to the wall.

Boiler clearances
The minimum overall dimensions of the space in which the boiler is to operate and to facilitate servicing are as follows:-

Additional space will be required for installation, depending upon site conditions.

IMPORTANT.
In order to facilitate gas connection, a clearance of at least 100 mm (4") must be available at either the left hand side or the right hand side DURING installation. Refer to Frame 31.

In addition a MINIMUM clearance of 533 mm (21") MUST be available at the front of the boiler, for servicing.

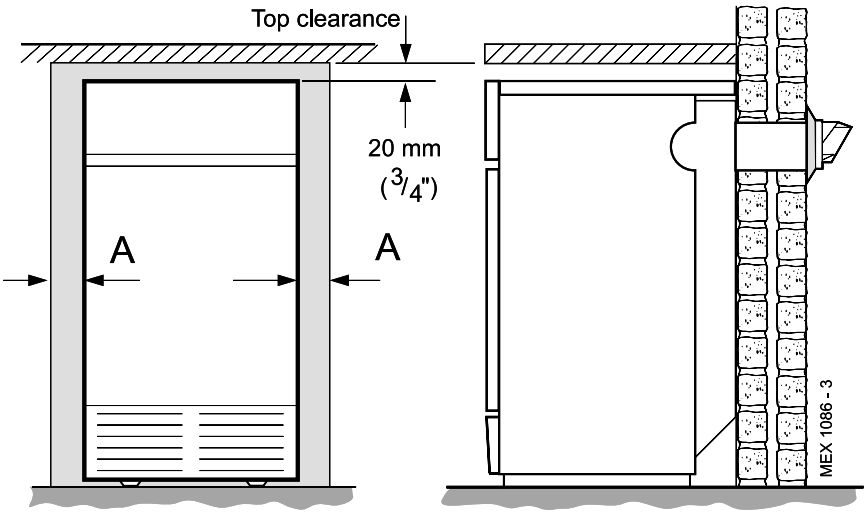

Front view **Side view**

Boiler Model	Flue Length	Overall Space Dimension				Min Side Clearance 'A'	
		Depth	Height	Width Rear Flue	Width Side/Top Flue	Rear Flue	Side/Top Flue
4100	114 to 600 (4 1/2 to 23 5/8")	533 (21")	870 (34 1/4")	460 (18 1/8")	510 (20 1/8")	10 (3/8")	35(1 3/8")
	600 to 2000 (23 5/8 to 78 3/4")	533 (21")	870 (34 1/4")	510 (20 1/8")	510 (20 1/8")	35 (1 3/8")	35(1 3/8")
4125	114 to 600 (4 1/2 to 23 5/8")	600 (23 5/8")	870 (34 1/4")	550 (21 5/8")	550 (21 5/8")	55 (2 1/4")	55(2 1/4")
	600 to 1000 (23 5/8" to 39 1/4")	600 (23 5/8")	870 (34 1/4")	550 (21 5/8")	550 (21 5/8")	55 (2 1/4")	55(2 1/4")

GAS SUPPLY

The local gas supplier should be consulted, at the installation planning stage, in order to establish the availability of an adequate supply of gas. An existing service pipe must NOT be used without prior consultation with the local gas supplier.

The boiler is to be installed only on a gas supply with a governed meter.

A gas meter can only be connected by the local gas supplier or by a local regional contractor.

Check that the appliance is suitable for the proposed gas supply. An existing meter should be checked, preferably by the gas supplier, to ensure that the meter is adequate to deal with the rate of gas supply required. A **minimum** gas pressure of 20 mbar MUST be available at the boiler inlet, with the boiler operating.

Installation pipes MUST be fitted in accordance with BS. 6891. Pipework from the meter to the boiler MUST be of an adequate size. Both 100 and 125 models should be piped in 22mm minimum. The final metre may be run in 15mm if it is visible.

The complete installation MUST be tested for gas soundness and purged as described in the above code.

FLUE INSTALLATION

Some pluming may occur at the termination, so terminal positions where this could cause a nuisance should be avoided. The flue must be installed in accordance with the recommendations of BS.5440-1:2000. The following notes are intended for general guidance:-

1. The boiler MUST be installed so that the terminal is exposed to external air.
2. It is important that the position of the terminal allows the free passage of air across it at all times.
3. Minimum acceptable spacings from the terminal to obstructions and ventilation openings are specified in Table 3.

Table 3 - Balanced flue terminal position

Terminal Position	Minimum Spacing
1a. Directly BELOW an opening, air brick, opening window, etc.	300 mm (12")
1b. Directly ABOVE an opening, air brick, opening window, etc.	300 mm (12")
1c. HORIZONTALLY to an opening, air brick,opening window, etc.	300 mm (12")
2. Below guttering, drain pipes or soil pipes	75 mm (3")
3. Below eaves	200 mm (8")
4. Below balconies or a car port roof	200 mm (8")
5. From vertical drain pipes or soil pipes	150 mm (6")
6. From an internal or external corner or to a boundary alongside the terminal	300 mm (12")
7. Above adjacent ground, roof or balcony level	300 mm (12")
8. From a surface or a boundary facing the terminal	600 mm (24")
9. From a terminal facing a terminal	1200 mm (48")
10. From an opening in a car port (e.g. door or window) into dwelling	1200 mm (48")
11. Vertically from a terminal on the same wall	1500 mm (60")
12. Horizontally from a terminal on the wall	300 mm (12")

4. Where the lowest part of the terminal is fitted less than 2m (6'6") above a balcony, above ground or above a flat roof to which people have access then the terminal MUST be protected by a purpose designed guard.

   Terminals guards are available from boiler suppliers - ask for TFC Flue Guard, Model K1. In case of difficulty seek advice from:

   Grasslin (UK) Ltd., Tower House,
   Vale Rise, Tonbridge, Kent TN9 1TB
   Telephone No. 01732 359 888, Fax No. 01732 354 445
   www.tfc-group.co.uk

   Ensure that the guard is fitted centrally.
5. The air inlet/products outlet duct and the terminal of the boiler MUST NOT be closer than 25mm (1") to combustible material. Detailed recommendations on the protection of combustible material are given in BS.5440-1:2000.

IMPORTANT

It is absolutely ESSENTIAL to ensure, in practice, that products of combustion discharging from the terminal cannot re-enter the building or any other adjacent building through ventilators, windows, doors, other sources of natural air infiltration or forced ventilation/air conditioning. If this should occur, the appliance MUST be turned OFF, labelled 'unsafe' and corrective action taken.

TERMINAL

WARNING

For top outlet installation the flue terminal MUST always be in the horizontal position (not available on 125 model).

The terminal assembly can be adapted to accommodate various wall thicknesses. Refer to Frames 11 & 28.

AIR SUPPLY

Detailed recommendations for air supply are given in BS.5440:2. The following notes are for general guidance:

1. It is NOT necessary to have a purpose provided air vent in the room or internal space in which the boiler is installed.
2. If the boiler is to be installed in a cupboard or compartment, permanent air vents are required (for cooling purposes) in the cupboard/compartment, at both high and low levels. The air vents must either communicate with room/internal space, or be direct to outside air. The minimum effective areas of the permanent air vents, required in the cupboard/ compartment, are specified as follows and are related to maximum rated heat input.
3. Both air vents MUST communicate with the same room or internal space or MUST be on the same wall to outside air.
4. In siting the air vents care must be taken to avoid the freezing of pipework.

Table 4 - High and low vent areas

Boiler	Air from room/internal space cm² (in.²)		Air direct from outside cm² (in.²)	
	High level	Low level	High level	Low level
4100	354 (55)	354 (55)	177 (28)	177 (28)
4125	438 (68)	438 (68)	219 (34)	219 (34)

WATER CIRCULATION SYSTEM

The boiler must NOT be used for direct hot water supply. The boiler is suitable for connection to pumped open vent central heating systems, pumped central heating combined with pumped or gravity indirect domestic hot water supply systems.

IMPORTANT

A minimum length of 2m of copper pipe MUST be fitted to both flow and return connections from the boiler before connection to any plastic piping. **This applies to ALL types of installation.**

The boiler is NOT suitable for gravity heating systems. The hydraulic resistances of the boilers at *maximum output* with 11°C (20 °F) temperature differentials are shown in the graph below.

Maximum boiler operating temperature should be 82°C (180°F).

The central heating system should be in accordance with BS. 6798 and, in addition, for smallbore and microbore systems, BS. 5449:1.

The domestic hot water system, if applicable, should be in accordance with the relevant recommendations of BS. 5546.

Copper tubing to BS. 2871:1 is recommended for water carrying pipework.

The hot water storage cylinder MUST be of the indirect type and should preferably be manufactured of copper.

Single feed, indirect cylinders are not recommended and MUST NOT be used on sealed systems.

The hot water cylinder and ancillary pipework not forming part of the useful heating surface should be lagged to prevent heat loss and any possible freezing - particularly where pipes run through roof spaces and ventilated underfloor spaces.

IMPORTANT

The boiler must be vented. If venting cannot be done via a flow connection a separate vent MUST be fitted by the installer.

Draining taps MUST be located in accessible positions, which permit the draining of the whole system - including the boiler and hot water storage vessel. They should be at least 1/2" BSP nominal size and be in accordance with BS. 2879.

If required, a drain tap (not supplied) may be fitted to an unused bottom (1" BSP) tapping on the front of the boiler.

Water Flow Rate and Pressure Loss

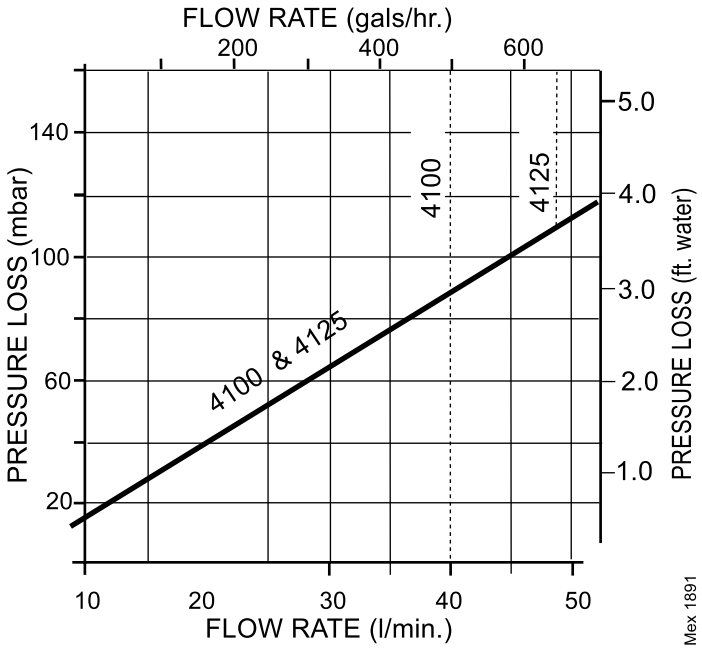

Dotted lines indicate flow rates equivalent to a temperature rise of 11 °C (20 °F)

WATER TREATMENT

The British Gas RD2 incorporates a cast iron heat exchanger. As part of the installation the central heating system should be thoroughly flushed with appropriate water treatment in order to comply with BS7593:1992

British Gas recommend the use of Fernox or Betz Dearborn water treatment products which must be used in accordance with the manufacturers instructions. For further information contact :
Fernox Manufacturing. Co. Ltd., Tandem House, Marlowe Way, Croydon, Surrey CRO 4XS.
Tel. 0870 601 5000

or

Betz Dearborn Ltd., Widnes, Cheshire.
tel. 0151 424 5351

IMPORTANT. ANY OTHER TREATMENT FOR THIS PRODUCT MAY RENDER THE GUARANTEE OF BRITISH GAS ***INVALID.***

Notes.

1. *If an inhibitor is used, and in hard water areas where treatment to prevent lime deposits is necessary, it is most important that the water treatment MUST be maintained at the correct concentrations recommended by the treatment manufacturer.*
2. *Artificially softened water must not be used in the system, under any circumstances.*

THERMOSTATIC RADIATOR VALVES

British Gas recommend that heating systems utilising full thermostatic radiator valve control of temperature in individual rooms should also be fitted with a room thermostat controlling the temperature in a space served by radiators not fitted with such a valve, as stated in BS. 5449.

When thermostatic radiator valves are used, the space heating temperature control over a living / dining area or hallway having a heating requirement of at least 10% of the boiler heat output should be achieved using a room thermostat, whilst other rooms are individually controlled by thermostatic radiator valves. However, if the system employs thermostatic radiator valves on all radiators or 2 port valves without end switches then a bypass must be fitted in order to ensure a flow of water should all the valves be in the closed position.

ELECTRICAL SUPPLY

WARNING. The appliance MUST be efficiently earthed.

Wiring external to the appliance MUST be in accordance with the current I.E.E. (BS 7671) Wiring Regulations and any local regulations which apply.

The boiler is supplied for 230 V ~ 50 Hz single phase. The fuse rating is 3A.

Connection must be made in a way that allows complete isolation of the electrical supply - such as a double pole switch, having a 3mm (1/8") contact separation in both poles, or a plug and socket serving only the boiler and system controls.

The means of isolation must be accessible to the user after installation.

For bathroom installations the point of connection to the mains must be situated outside the bathroom.

3 MINIMUM REQUIREMENTS Fully pumped systems

1. Open vent and cold feed connections must be made to the boiler flow and return tappings according to the options shown in Frame 12.
2. The boiler is assumed to be the highest point of the circulating system.
3. The circulating pump is positioned on the FLOW and the vertical distance, between the pump and feed/ expansion tank, must comply with the pump manufacturer's minimum requirements, to avoid cavitation. Should these conditions not apply, either lower the pump position or raise the feed/ expansion tank above the minimum requirements of **British Gas Services.**
4. The water velocity through the boiler flow / return pipes is assumed to be below 1.5 m/s (5 ft./s), whilst the pump flow rate is set to provide a temperature difference of 11 °C (20 °F) across the boiler flow / return, at design input.
5. This information is intended as a GUIDE ONLY and cannot take into account instantaneous changes in head caused by the operation of motorised valves, pumps etc.

   Due allowance MUST be made if surging is liable to occur.

   If in any doubt, contact **British Gas Services.**

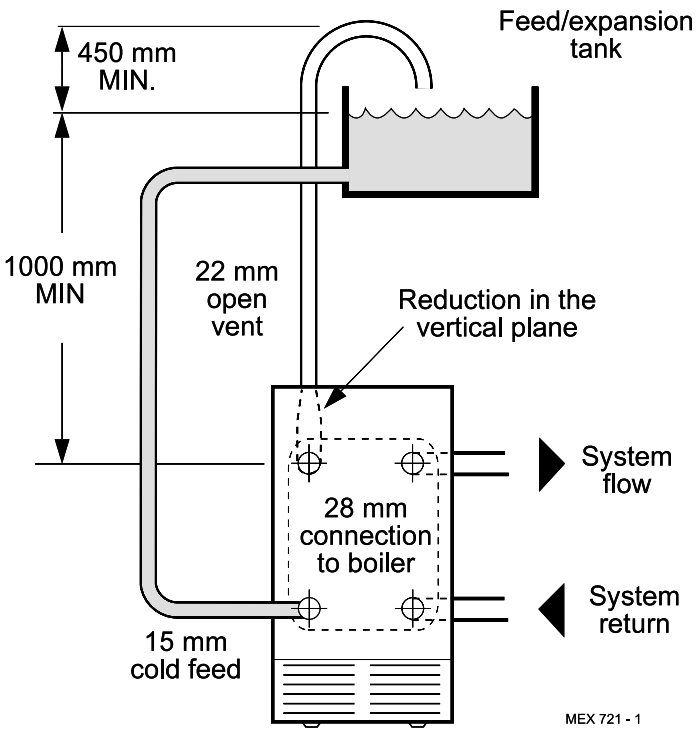

4 GRAVITY HOT WATER & PUMPED CENTRAL HEATING

1. Separate flow and return connections are used for each service. All possible configurations are given in Frame 12 and *ONLY those shown should be used.*
2. The schematic pipework graph is based on the assumption that NO MORE than 8 elbows are used in the gravity loop, including entry to the boiler.
3. For each extra elbow in excess of 8 (R) MUST be reduced by 300 mm (12") or (H) increased by 100 mm (4")
4. Whatever value is selected for (R), the value of (H) MUST be at least that indicated by the graph.

(R) = *the horizontal distance between the centre line of the cylinder and the boiler tappings used - measured along the pipe run.*

(H) = *the vertical distance between the top of the boiler and the base of the cylinder.*

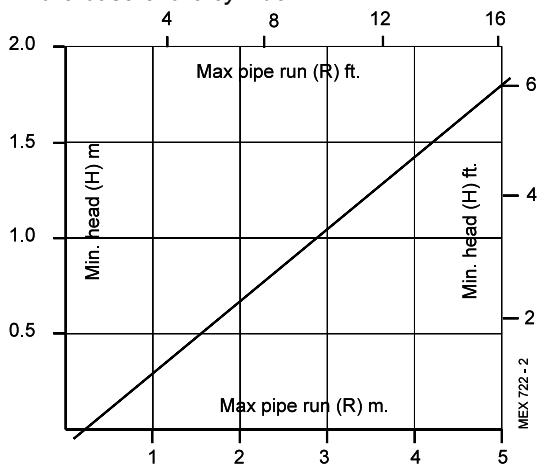

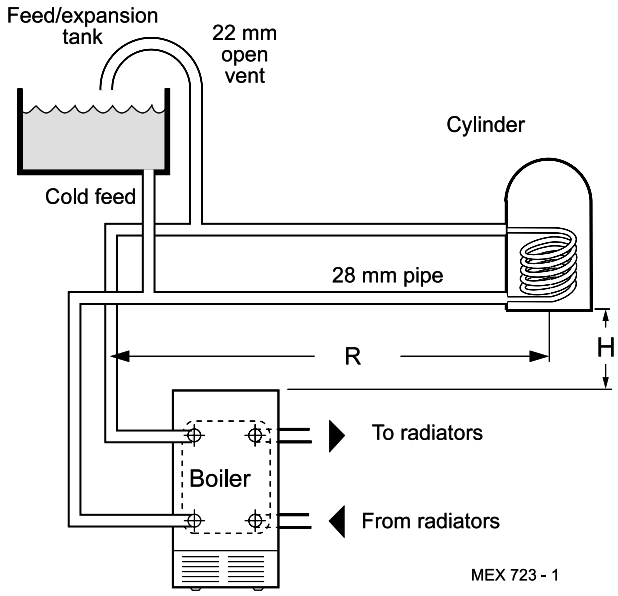

Notes.

a. *Flow and return pipes should rise vertically on leaving the boiler.*

b. *Horizontal pipes should be ABOVE ceiling level and as short as possible.*

c. *A MINIMUM inclination of 25 mm per 3 m run (1" per 10') is required to avoid air locks.*

If the above conditions cannot be met pumped primaries should be used.

5 SEALED SYSTEM REQUIREMENTS

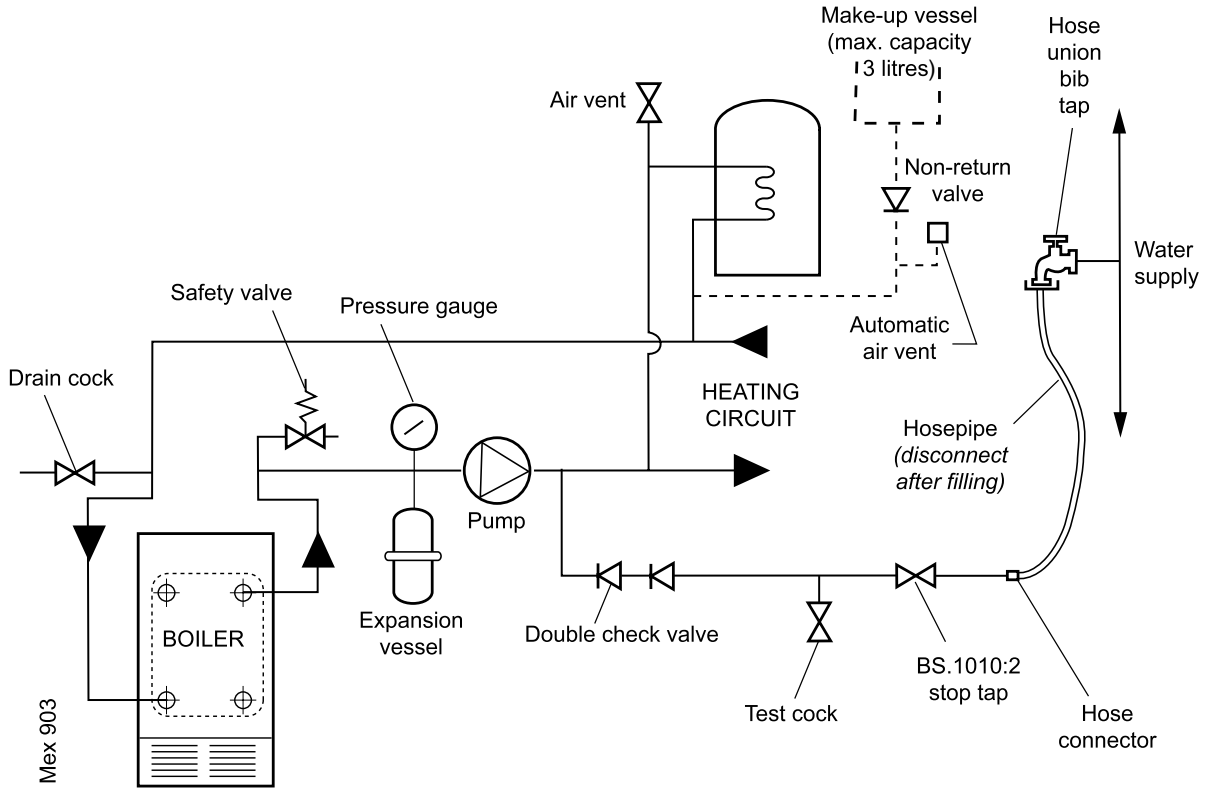

Note. *The method of filling, refilling, topping up or flushing sealed primary hot water circuits from the mains via a temporary hose connection is only allowed if acceptable to the local water authority.*

1. General

a. The installation must comply with the requirements of BS.6798 and BS.5449.

b. The installation should be designed to work with flow temperatures of up to 82°C.

c. All components of the system, including the heat exchanger of the indirect cylinder, must be suitable for a working pressure of 3 bar (45 lb/in^2) and temperature of 110°C. Care should be taken in making all connections so that the risk of leakage is minimised.

2. Safety Valve

A spring loaded safety valve complying with the relevant requirements of BS.6759 must be fitted in the flow pipe, as close to the boiler as possible and with no intervening valve or restriction. The valve should have the following features:

a. A non-adjustable pre-set lift pressure not exceeding 3 bar (45 lb./in^2)

b. A manual testing device.

c. Provision for connection of a discharge pipe. *The valve or discharge pipe should be positioned so that the discharge of water or steam cannot create a hazard to the occupants of the premises or cause damage to electrical components and wiring.*

3. Pressure Gauge

A pressure gauge covering at least the range 0-4 bar (0-60 lb./in^2) must be fitted to the system. The gauge should be easily seen from the filling point and should preferably be connected at the same point as the expansion vessel.

4. Expansion Vessel

a. A diaphragm type expansion vessel must be connected at a point close to the inlet side of the pump, the connecting pipe being not less than 15mm (1/2" nominal) size and not incorporating valves of any sort.

b. The vessel capacity must be adequate to accept the expansion of the system water when heated to 110°C (230°F)

c. The charge pressure must not be less than the static water head above the vessel The pressure attained in the system when heated to 110°C (230°F) should be at least 0.35 bar (5lb/in^2) less than the lift pressure of the safety valve.

For guidance on vessel sizing refer to the table in Frame 6. For further details refer to BS.5449 and the British Gas Corporation publication : Material and Installation Specifications for Domestic Central Heating & Hot Water.

5. Cylinder

The cylinder must be either of the indirect coil type or a direct cylinder fitted with an immersion calorifier which is suitable for operating on a gauge pressure of 0.35 bar (5lb./in^2) in excess of the safety valve setting. *Single feed indirect cylinders are not suitable for sealed systems.*

6. Make-up Water

Provision must be made for replacing water loss from the system, either:

a. From a manually fitted make-up vessel with a readily visible water level. The vessel should be mounted at least 150mm (6") above the highest point of the system and be connected through a non-return valve to the system, fitted at least 300mm (12") below the make-up vessel on the return side of the domestic hot water cylinder or radiators.

b. Where access to a make-up vessel would be difficult by pre-pressurisation of the system. Refer to 'Filling.'

6 SEALED SYSTEM REQUIREMENTS - continued

7. Mains Connection

There must be no direct connection to the mains water supply or to the water storage tank supplying domestic water, even through a non-return valve, without the approval of the local water authority.

8. Filling

The system may be filled by one of the following methods:

a. Through a cistern, used for no other purposes, via a ball valve permanently connected directly to a service pipe and / or a cold water distributing pipe.

The static head available from the cistern should be adequate to provide the desired initial system design pressure. The cold feed pipe from the cistern should include a non-return valve and a stop valve with an automatic air vent connected between them, the stop valve being located between the system and the automatic air vent. The stop valve may remain open during normal operation of the system if automatic water make-up is required.

b. Through a self-contained unit comprising a cistern, pressure booster pump (if required) and, if necessary, an automatic pressure reducing valve and flow restrictor. The cistern should be supplied through a temporary connection from a service pipe or cold water distributing pipe.

This unit may remain permanently connected to the heating system to provide limited automatic water make-up. Where the temporary connection is supplied from a service pipe or distributing pipe which also supplies other draw-off points at a lower level then a double check valve shall be installed upstream of the draw-off point.

c. Through a temporary hose connection from a draw-off tap supplied from a service pipe under mains pressure. Where the mains pressure is excessive a pressure-reducing valve shall be used to facilitate filling.

The following fittings shall form a permanent part of the system and shall be fitted in the order stated:

A stop valve complying with the requirements of BS. 1010, Part 2 (the hose from the draw-off tap shall be connected to this fitting).

A test cock.

A double check valve of an approved type.

- Thoroughly flush out the whole of the system with cold water, without the pump in position.
- With the pump fitted, fill and vent the system until the pressure gauge registers 1.5 bar (21.5lb/in^2).

  Examine for leaks.
- Check the operation of the safety valve by manually raising the water pressure until the valve lifts. This should occur within ± 0.3 bar (± 4.3lb/in^2) of the pre-set lift pressure.
- Release water from the system until the initial system design pressure is reached.
- Light the boiler and heat the system to the maximum working temperature. Examine for leaks.
- Turn off the boiler and drain the system while still hot.
- Refill and vent the system.
- Adjust the initial pressure to the required value.

Sizing procedure for expansion vessels: The volume of the expansion vessel (litres) fitted to a sealed system shall not be less than that given by the table below, multiplied by a factor of 0.8 (for flow temperatures of less than 88 ^{o}C).

Safety valve setting	**3.0 bar**			**2.5 bar**			**2.0 bar**	
Vessel charge and initial system pressure	0.5 bar	1.0 bar	1.5 bar	0.5 bar	1.0 bar	1.5 bar	0.5 bar	1.0 bar
Total water content of system (litres)	**Expansion vessel volume (litres)**							
25	2.1	2.7	3.9	2.3	3.3	5.9	2.8	5.0
50	4.2	5.4	7.8	4.7	6.7	11.8	5.6	10.0
75	6.3	8.2	11.7	7.0	10.0	17.7	8.4	15.0
100	8.3	10.9	15.6	9.4	13.4	23.7	11.3	20.0
125	10.4	13.6	19.5	11.7	16.7	29.6	14.1	25.0
150	12.5	16.3	23.4	14.1	20.1	35.5	16.9	30.0
175	14.6	19.1	27.3	16.4	23.4	41.4	19.7	35.0
200	16.7	21.8	31.2	18.8	26.8	47.4	22.6	40.0
225	18.7	24.5	35.1	21.1	30.1	53.3	25.4	45.0
250	20.8	27.2	39.0	23.5	33.5	59.2	28.2	50.0
275	22.9	30.0	42.9	25.8	36.8	65.1	31.0	55.0
300	25.0	32.7	46.8	28.2	40.2	71.1	33.9	60.0
Multiplying factors for other system volumes	0.0833	0.109	0.156	0.094	0.134	0.237	0.113	0.20

7 BOILER ASSEMBLY - Exploded View

100 shown with casing removed .

42
Fan sensor
38
14
12
49
3
4
2
6
Flow sensor
41
5
1
7
92
6B
6A
Overheat sensor
Return sensor
Tie rod
Mex 1888
8
47
18
46
16
28
65
Data badge

Detail of distributor tube alignment

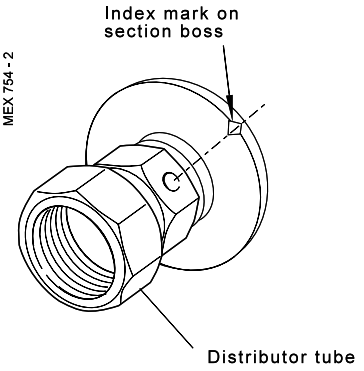

LEGEND

1. Heat exchanger assembly.
2. Front section.
3. Centre section.
4. Section alignment rings and 'O' rings.
5. Back section.
6. Flow thermistor sensor pocket.
6A. Return thermistor sensor pocket.
6B. O/heat thermostat sensor pocket.
7. Distributor tube.
8. Combustion chamber.
12. Collector hood.
14. Fan assembly.
16. Front plate assy.
18. Burner manifold.
28. Gas cock.
38. Pressure switch.
41. Air inlet duct.
42. Turret access cover assy.
46. Boiler base plate.
47. Baseplate heat shield.
49. Flue baffle.
65. Control box.
92. Thermostat bush.

8 UNPACKING

The boiler is supplied fully assembled in Pack A, together with a standard flue assembly for lengths up to 600mm (23 1/2") rear or side flue outlet in Pack B.

Unpack and check the contents.

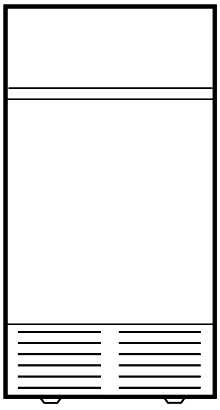

complete boiler assembly

PACK 'A' CONTENTS

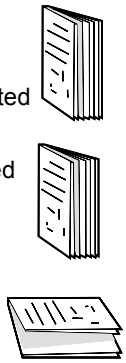

- Complete boiler assembly
- The Boiler Hardware Pack (listed separately)
- The Flue Hardware Pack (listed separately)
- These Installation/Servicing Instructions
- User's Instructions.
- Template

BOILER HARDWARE PACK

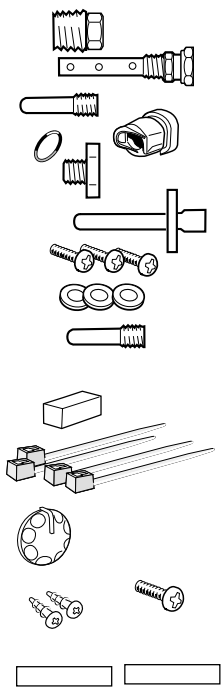

- 1" BSP plugs - 3 off.
- Distributor tube - 1 off.
- 28mm x 1"BSP male straight adapter compression fitting - 3 off. For connection to the boiler PUMPED & GRAVITY flow /return tappings.
- Flow sensor pocket -1 off.
- Return sensor pocket kit comprising:
  Hexagon bush - 1 off.
  Sensor pocket - 1 off.
  'O' ring - 1 off.
  Heyco bush - 1 off.
  M5 x 10mm Pozi screw - 3 off.
  Washers - 3 off.
- O/heat thermostat pocket - 1off
- 1/2" square bar - 1 off.
- Cable tie - 4 off.
- Control thermostat knob - 1 off.
- M3 x 6mm Pozi pan screw- 1 off.
- Self tapping screw - 2 off.
- British Gas Logo- 1 off.
- Scottish Gas Logo - 1 off.

FLUE PACK. Pack B Contents

- Duct cutting support - 2 off (cardboard)
- Terminal wall plate - 1 off.
- Terminal grille assy. - 1 off.
- Polyurethane foam seal 400 lg. - 1 off.
- No. 8 x 8 lg. Pozi pan hd. screws - 3 off.

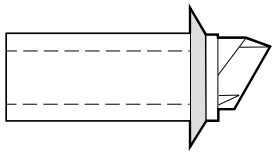

Flue terminal

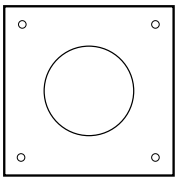

Terminal wall plate

FLUE HARDWARE PACK

- Flue extension tube (rear).
- Flue extension tube (side).
- Flue extension tube (top).
- Elbow .
- Sealing ring.
- M5 wing nuts - 3 off.
- Side outlet plate.
- No. 10 x 2" lg. Rd Hd.wood screws - 4 off.
- Wall plugs - 4 off.

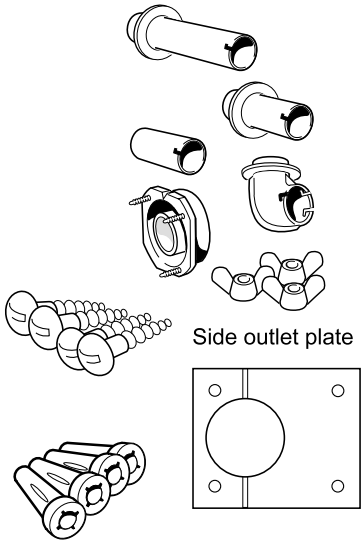

Side outlet plate

9 BOILER CASING REMOVAL

To install the boiler the casing MUST be removed.

1. Undo the 2 screws and lift off the lower front panel.
2. Remove the 2 screws and lift off the grille assembly.
3. Release the 'Burner On' neon from the rear of the control panel.
4. Release the wiring harness leads from the edge clips on the RH side panel.
5. Remove the 2 screws securing the control panel and pull down to release the tabs from under the top panel.

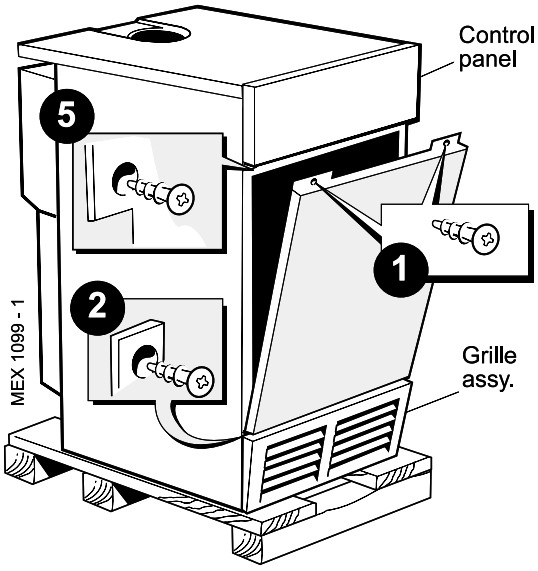

10 BOILER CASING REMOVAL - continued

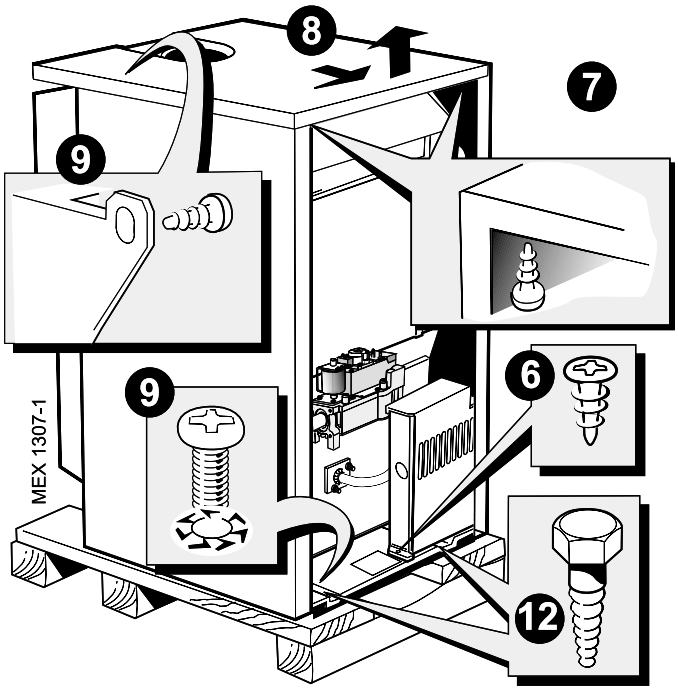

6. Release the screw securing the control box to the baseplate and slide to the left to release the box.
7. Remove the 2 screws securing the top panel to the sides.
8. Draw the top panel forward and lift it off the boiler.
9. Remove the 2 screws securing the LH side panel to the turret front panel and baseplate.
10. Pull the panel forward, disengaging from the collector hood tab, lift it clear of the locating peg and remove.
11. Repeat steps 9 and 10 to remove the RH panel.
12. The boiler is held to the packaging base by 4 M6 hex head screws. Remove the front screws, slacken the rear screws and remove the boiler from the packaging base.

11 DETERMINING THE FLUE LENGTH

It is MOST IMPORTANT that the boiler is installed in a vertical position.

WARNING.

For top outlet installation the flue terminal MUST always be in the horizontal position (not available on 125 model).

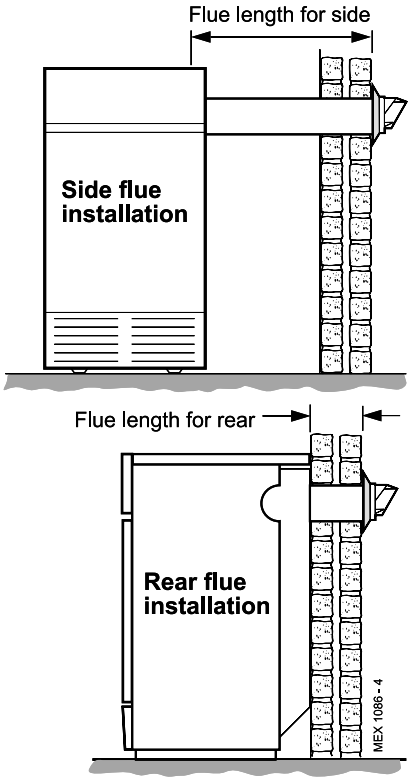

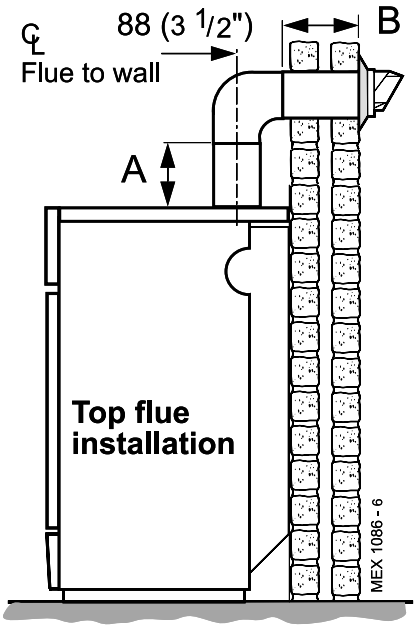

Top outlet flue length

= A + B + Elbow allowance

90° Elbow = 1m

45° Elbow = 0.7m

FLUE KITS

Pack B: supplied as standard.

Pack D: optional extension kit for side flue, top or rear flue outlet. Refer to 'Flue Extension Ducts'

1. A maximum of 2 extension ducts (plus the standard flue duct) may be used together for 100 or 1 extension duct for 125.
2. Flue extensions of greater than 1m (39") should be supported with the bracket provided.

Flue length mm	100 Pack Req.	125 Pack Req.	Product No.
Up to 600	B, 1 off	B, 1 off	150 308
600 to 1000	B, 1 off + D, 1 off	B, 1 off + D, 1 off	150 308+152132
600 to 1550	B, 1 off + D, 1 off	N/A	150 308+ 152132, 1 off
1505 to 2000	B, 1 off + D, 2 off	N/A	150 308+ 152132, 2 off

12 PREPARING THE BOILER

Table 7 - Fully Pumped Systems

Connections (as viewed at front)		Sensor Position		
Back Section		Front Section		
Flow Top	Return Bottom	Flow Top	Return Bottom	O/heat Bottom
LH	LH	LH	LH	RH
LH	RH	LH	RH	LH
RH	RH	RH	RH	LH
RH	LH	RH	LH	RH

Table 8 - Gravity Dom. Hot Water & Pumped Central Heating

Connections (as viewed at front)				Sensor Position		
Back Section				Front Section		
CH		DHW		Flow	Return	O/heat
Flow	Return	Flow	Return	Top	Bottom	Bottom
LH	LH	RH	RH	LH	LH	RH
LH	RH	RH	LH	LH	RH	LH
RH	RH	LH	LH	RH	RH	LH
RH	LH	LH	RH	RH	LH	RH

Notes.

- *Before placing the boiler in the selected position any gas and water connections at the rear of the boiler should be prepared, due to the possible lack of access.*
- *The pump may be fitted to the FLOW or the RETURN.*

1. Screw the distributor tube (supplied with a 1" BSP x 28mm copper adaptor) into the selected heating return tapping, using an appropriate jointing material.

IMPORTANT.
It is **IMPERATIVE** that the index mark on the distributor tube bush is in alignment with the mark on the section boss, as shown in Frame 3.

DO NOT disturb it when connecting subsequent pipework.

Fully pumped systems using more than 1 pump, serving separate zones, must have a common return connection to the distributor tube.

2. Select the desired pumped flow tapping and fit a 28mm x 1"BSP adapter.
3. Fit the boiler return sensor pocket into the appropriate front section tapping as follows:
   - **a.** Screws the hexagon bush into the tapping using approved jointing material. Refer to Tables 7 and 8.
   - **b.** Fit the 'O' ring into the bush.
   - **c.** Insert the sensor pocket, ensuring that it enters the hole in the end of the distributor tube.
   - **d.** Secure the pocket with the 3 screws and washers provided.
4. Screw the supplied overheat thermostat sensor pocket into the appropriate front section tapping using approved jointing material. Refer to Tables 7 and 8.
5. Screw the supplied boiler flow sensor pocket into the appropriate front section tapping, using an approved jointing material. Refer to Tables 7 and 8.
6. Fit 28mm x 1"BSP adapter pipe fittings to the appropriate rear tappings for DHW if required and plug any unused tappings.

13 REAR FLUE ASSEMBLY - Exploded view

For wall thickness 114mm to 600mm

1. The boiler turret assembly is factory built for rear flue installation.
2. Remove the turret access cover.
3. Fit the flue extension tube (supplied with the boiler) to the flue connector, rotate in the bayonet slot and secure with the M4 screws.

LEGEND

1. Terminal.
2. Weather seal.
3. Flue assembly.
4. Boiler sealing ring.
5. Flue extension tube.
6. Sealing plate.
7. Flue connector.
8. Turret access cover.

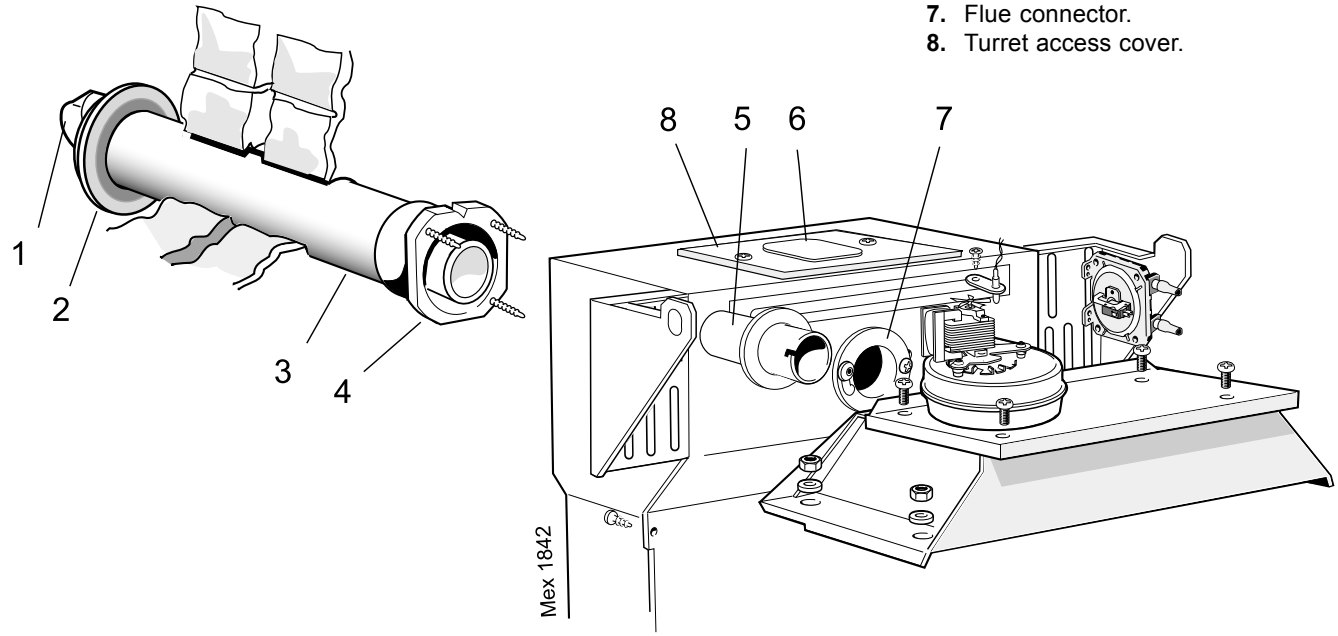

FLUE OUTLET

14 SIDE FLUE ASSEMBLY - Exploded view - For wall thickness 114mm to 600mm

Note. *For lengths greater than 600mm see Frame 11.*

1. The boiler turret assembly is factory built for rear flue installation.
2. Remove the turret access cover.
3. Remove the sealing plate from the appropriate side to be used and refit in the rear outlet.
4. Fit the outlet elbow pointing in the desired direction. Rotate in the bayonet slot and secure with the M4 screw.
5. Fit the kit extension tube (with ring) to the flue elbow, rotate in the bayonet slot and secure with the M4 screw.
6. When cutting the ducts always use the cardboard support provided.

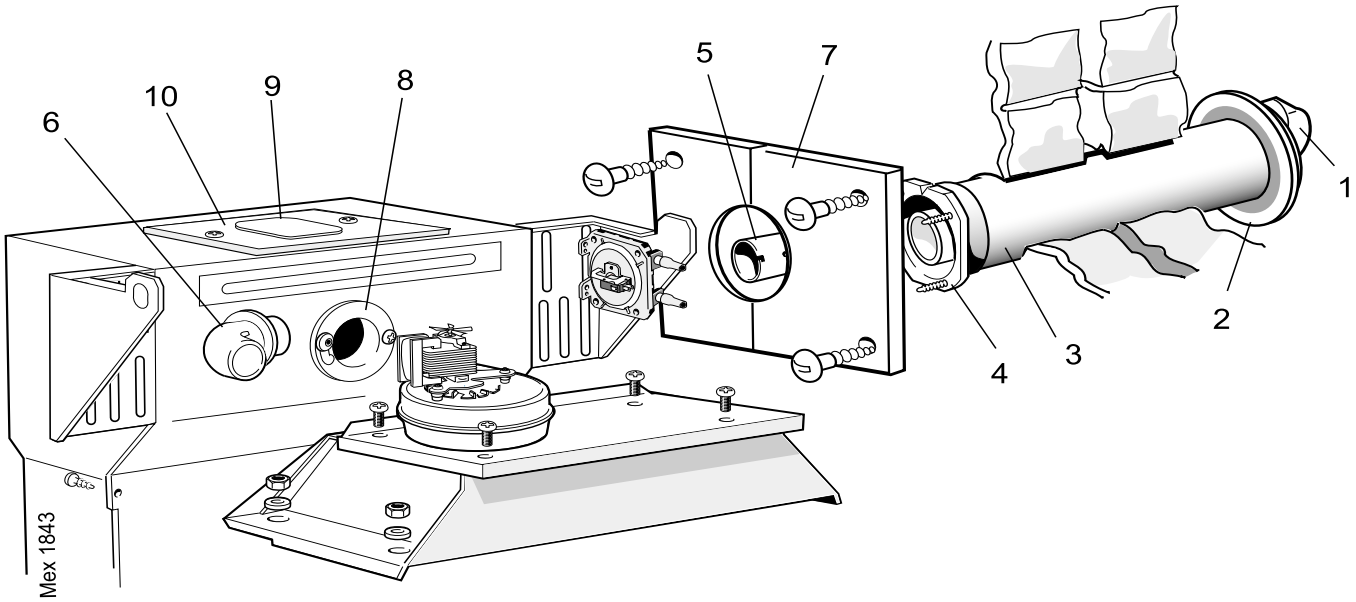

LEGEND

1. Terminal.
2. Weather seal.
3. Flue assembly.
4. Boiler sealing ring.
5. Flue extension tube (with ring).
6. Elbow.
7. Side outlet plate.
8. Flue connector.
9. Sealing plate.
10. Turret access cover.

15 TOP FLUE OUTLET ASSEMBLY - 100 ONLY - Exploded view

IMPORTANT

The maximum total equivalent horizontal flue length is 2m for 100 model.

Notes. *For lengths greater than 600mm see Frame 11.*

1. The boiler turret assembly is factory built for rear flue installation.
2. Remove the turret access cover.
3. Remove the sealing plate from the turret access cover and refit in the rear outlet.
4. Fit the outlet flue elbow pointing upwards, rotate in the bayonet slot and secure with the M4 screw.
5. Fit the kit extension tube (with no ring) to the flue elbow, rotate in the bayonet slot and secure with the M4 screw.
6. When cutting the ducts always use the cardboard support provided.

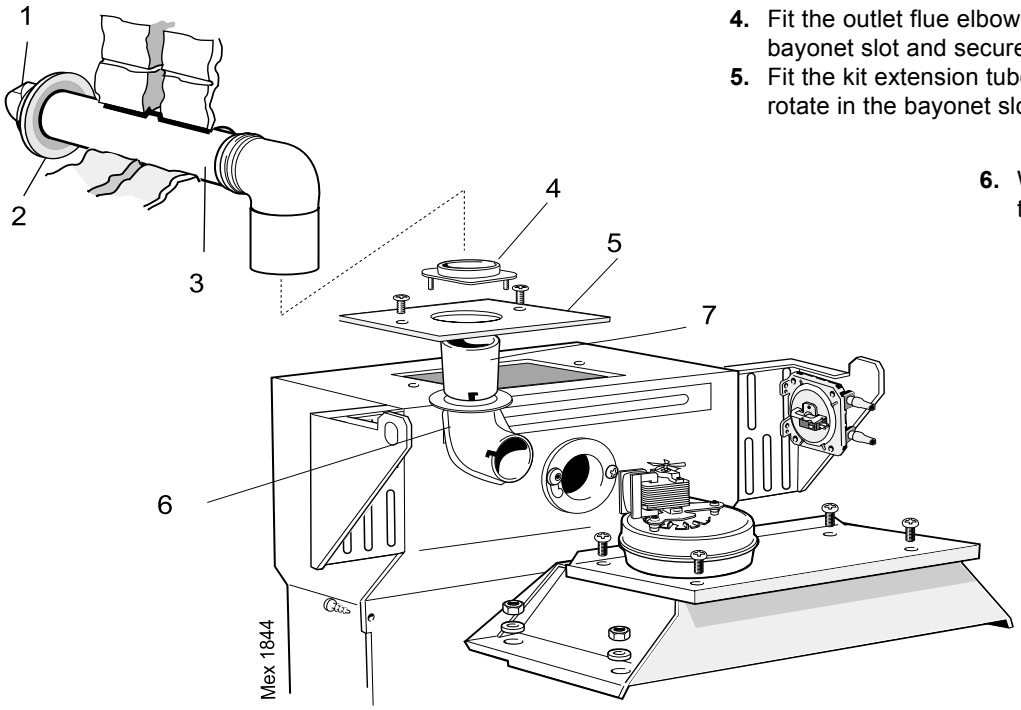

LEGEND

1. Terminal.
2. Weather seal.
3. Flue assembly.
4. Boiler sealing ring.
5. Flue extension tube.
6. Elbow.
7. Flue connector.
8. Turret access cover.

16 PREPARING THE WALL

1. Tape the template into the selected position.
2. Mark onto the wall the position of the flue duct hole.

IMPORTANT. Ensure that, during the cutting operation, masonry falling outside of the building does not cause damage or personal injury.

3. Cut the flue hole, preferably with a 125mm (5") core boring tool, ensuring that the hole is square to the wall. If the hole has been quite accurately cut with a drill then making good the wall faces is not essential as seals are provided at both ends of the flue. However, both wall faces immediately around the cut hole should be flat; make good if necessary. For less accurate holes make good to approximately 125mm (5") diameter at the 2 wall faces.
4. Remove the template from the wall.

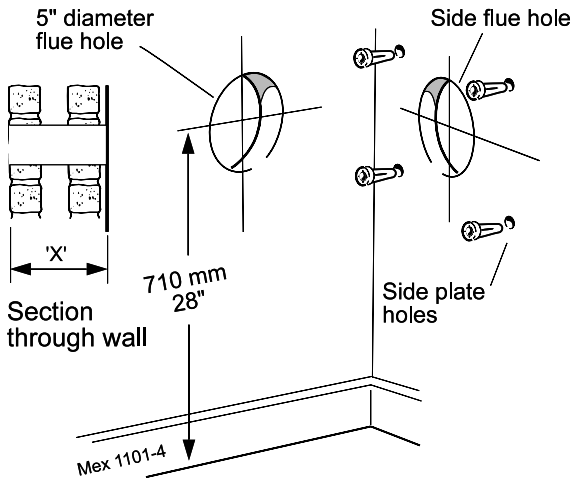

Note.
If the terminal is to be sited within 25-40mm of a corner or vertical pipe (refer to Table 3) then the hole MUST be accurately cut and the rubber weather seal trimmed around the groove provided. The terminal wall plate need not be fitted.

17 CUTTING THE FLUE - wall thicknesses of 114 to 600mm

1. Measure and note the wall thickness X.
2. Mark the wall thickness onto the flue.
3. To ensure the tube is cut square, mark the flue all the way round.
4. Cut to length X, using the cardboard ring for support.
5. Remove cardboard ring and remove any burrs.

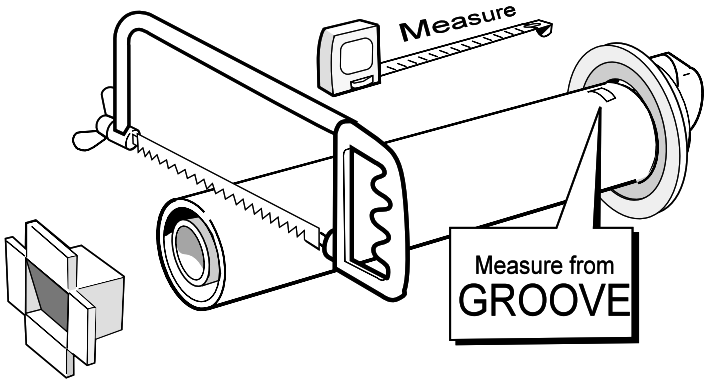

18 FITTING THE BOILER SEALING RING TO THE FLUE - Rear and Side

1. Fit the boiler sealing ring inside the outer flue duct. Ensure the boiler sealing ring is fully engaged.

   Ensure the notch aligns with the groove on the outer flue duct. This ensures correct alignment of the flue terminal.
2. Drill 3 holes 3.2mm (1/8") dia. through the outer flue duct and boiler sealing ring. **Do NOT drill the inner flue duct.**
3. Insert the self-tapping screws, provided, in order to fix the boiler sealing ring in position.
4. If the boiler is located with the rear against the wall, stick the self adhesive foam strip, provided, onto the flue immediately behind the boiler sealing ring. Otherwise refer to Frame 20.

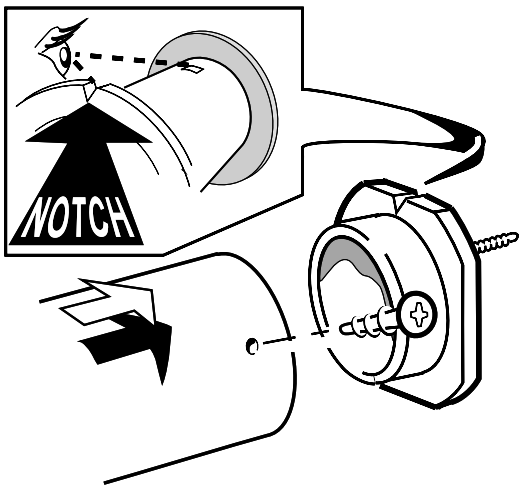

19 FITTING BOILER SEALING RING TO THE FLUE - Top (100 only)

1. Fit the boiler sealing ring inside the appropriate length (A) of outer flue duct (refer to Frame 11). Ensure the boiler sealing ring is fully engaged.
2. Drill 3 holes 3.2mm (1/8") dia. through the outer flue duct and boiler sealing ring. *Do not drill the inner flue duct*.
3. Insert the self tapping screws, provided, in order to fix the boiler sealing ring in position.
4. Fit the turret access cover to the sealing ring.

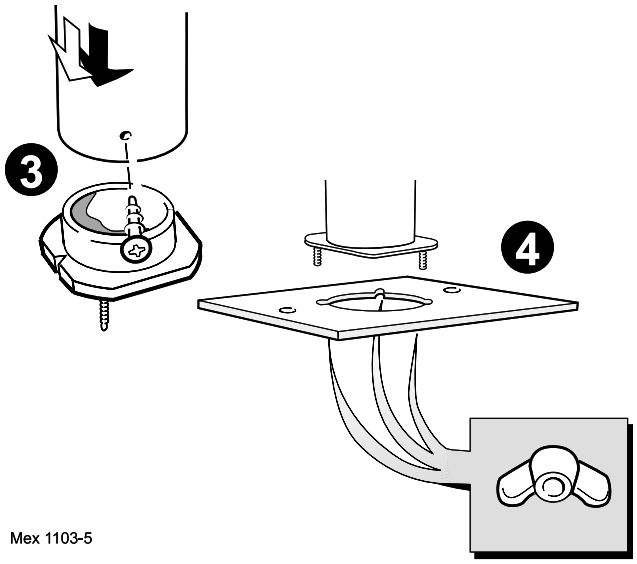

Mex 1103-5

20 FITTING THE FOAM SEAL

1. To determine the position for the foam seal measure the wall thickness and mark it onto the flue, measuring from the groove near the terminal.
2. Wrap the self-adhesive foam strip round the flue, ensuring that the foam is on the terminal side of the line. This seals the gap between the flue and the wall.

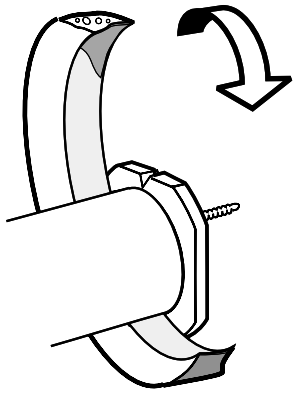

21 FITTING THE FLUE ASSEMBLY

A. Inside fitting.
If the flue assembly cannot be fitted from the outside, proceed as follows:

1. Insert the flue assembly through the hole far enough to allow the rubber seal to unfold completely and form an adequate seal on the outside wall.
2. Ensure the notch is at the top. This will aid the location of the studs into the boiler back panel.
3. Proceed to Frame 22, item B.

B. Outside fitting.
Proceed to Frame 22, item A.

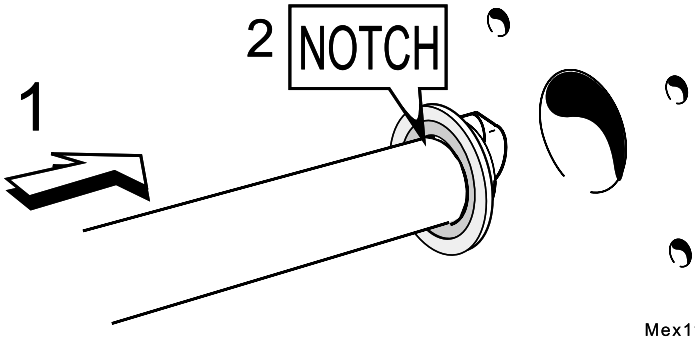

Mex1103-6

FLUE OUTLET

22 LOCATING THE BOILER

Rear and Side flue

A. If the flue assembly can be fitted from the **outside**, proceed as follows:

1. Move the boiler into position ensuring that the flue outlet is in line with the wall opening.
2. Insert the flue assembly ensuring that the flue slides into the flue extension and the 3 sealing ring studs locate into the boiler.

B. If the flue assembly has been fitted from the **inside** proceed as follows:

1. Move the boiler into position ensuring that the flue slides into the flue extension tube and the 3 sealing ring studs locate into the boiler back panel.

Top flue

Position the boiler beneath the flue assembly.

23 CONNECTING THE FLUE TO THE BOILER - Rear

1. Secure the flue to the boiler using the three M5 wing nuts provided.

Note.

The sealing ring studs will locate in the back panel one way only. This will ensure that the terminal is correctly aligned.

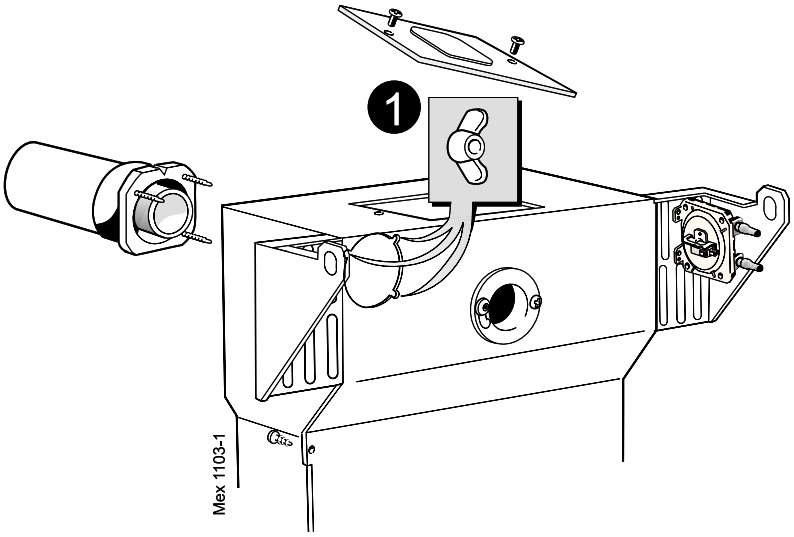

24 CONNECTING THE FLUE TO THE BOILER - Side

1. Secure the flue to the boiler, using the three M5 wing nuts provided.
2. Fit the kit extension tube (with ring) to the flue elbow, rotate in the bayonet slot and secure with the M4 screw.
3. Engage the extension tube into the flue outlet, connect the elbow to the fan outlet and secure with the M4 screw.

Note.

The sealing ring studs will locate in the back panel one way only. This will ensure that the terminal is correctly aligned.

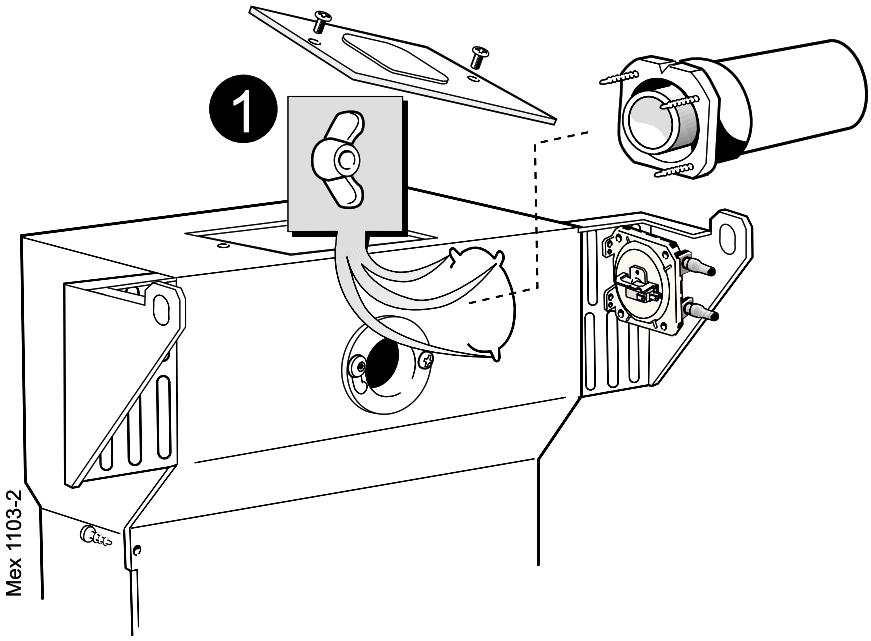

25 CONNECTING THE FLUE TO THE BOILER - Top (100 only)

1. Connect the flue terminal to the boiler, using the length (A) of flue duct previously cut and ensuring that the inner flue locates into the kit extension tube (without ring).
2. Secure the flue to the boiler using the 2 M4 x 16mm screws previously removed.

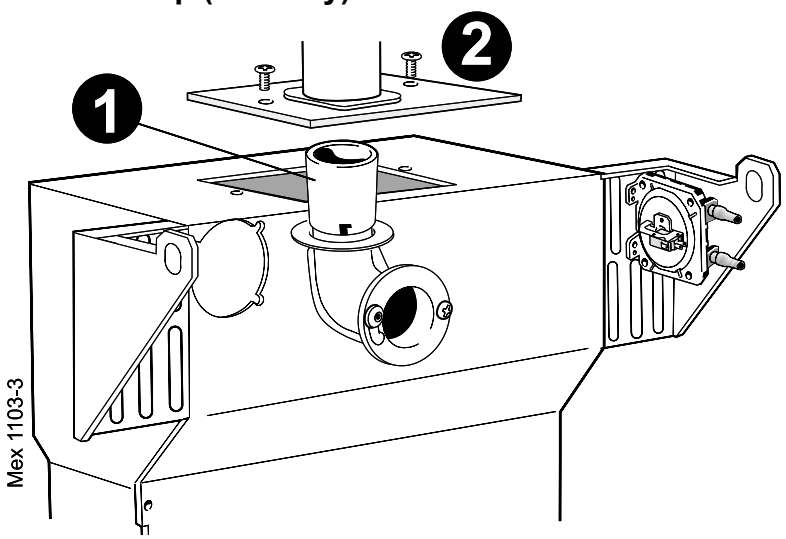

26 FITTING THE SIDE OUTLET PLATES

(Supplied in the Flue Hardware Pack)

Note. *If the boiler is fitted closer than 25mm to the side wall the side outlet plate must be fitted now.*

1. Split the side outlet plate into 2 down the split line.
2. Fit the 2 halves of the side outlet plate to the wall, ensuring they are behind the boiler sealing ring.

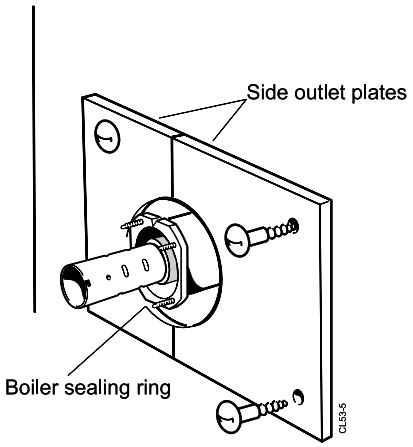

27 FLUE EXTENSION DUCTS

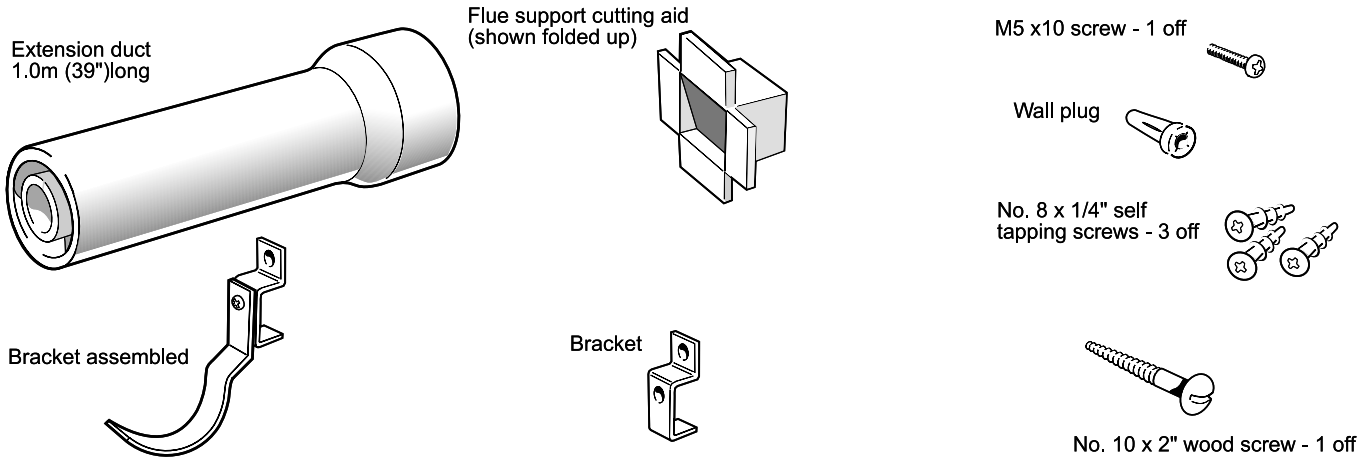

28 FLUE EXTENSION DUCTS - continued

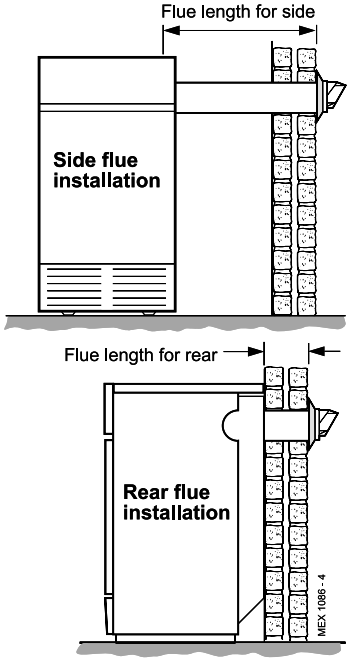

Top outlet flue length = A + B + Elbow allowance

90° Elbow = 1m

45° Elbow = 0.7m

FLUE KITS

Pack B: supplied as standard.

Pack D: optional extension kit for side flue, top or rear flue outlet. Refer to Frame 27.

1. A maximum of 2 extension ducts (plus the standard flue duct) may be used together.
2. Flue extensions of greater than 1m (39") should be supported with the bracket provided.

Flue length mm	100 Pack Req.	125 Pack Req.	Product No.
Up to 600	B, 1 off	B, 1 off	150 308
600 to 1000	B, 1 off + D, 1 off	B, 1 off + D, 1 off	150 308+152132
600 to 1550	B, 1 off + D, 1 off	N/A	150 308+ 152132, 1 off
1550 to 2000	B, 1 off + D, 2 off	N/A	150 308+ 152132, 2 off

29 FITTING THE KIT

1. Remove the cardboard support aid from the flue and place safely to one side.
2. Fit the inner flue extension duct onto the inner flue duct.
3. Fit the outer flue extension duct onto the outer air duct.
4. Drill 3 - 3.2mm (1/8") dia. holes through the outer air duct. ***Do not drill the inner flue duct.***
5. Insert the self tapping screws provided to fix the air duct in position.
6. Repeat steps 1-5 if a second flue extension is required.

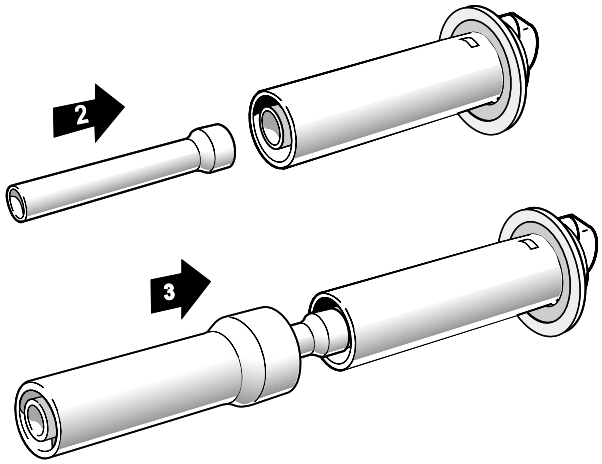

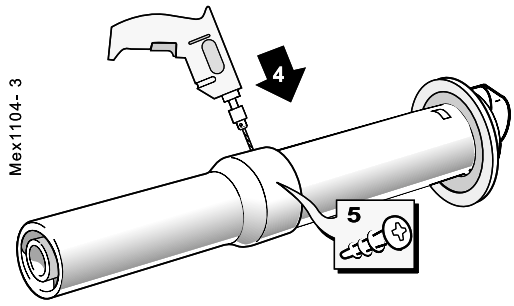

30 TERMINAL WALL PLATE

This plate allows neat concealment and full compression of the rubber seal. Its use is not essential if the flue hole and flue ducts have been accurately cut and the outside wall face is flat.

1. Position the terminal wall plate over the terminal.
2. Mark and drill 4 fixing holes with an 7mm (9/32") masonry drill.
3. Insert the 4 plastic plugs provided.
4. Secure the plate with 4 of the No.10 x 2" screws provided.

Note. *If the terminal is less than 2m (6' 6") above ground level, an approved terminal guard should be fitted. Refer to the Contents List on Page 4.*

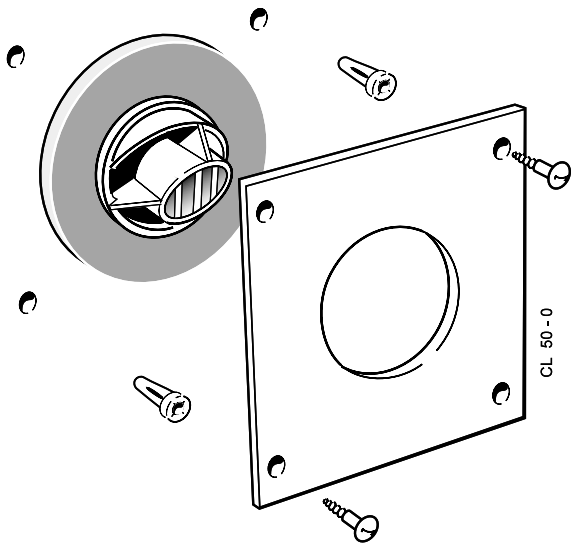

31 GAS CONNECTION

1. A MINIMUM working gas pressure of 20 mbar (8 in.w.g.) MUST be available at the boiler inlet, with the boiler operating.
2. Extend a gas supply pipe NOT LESS THAN 15mm (1/2") OD to the boiler and connect to the gas cock situated at the front LH side of the boiler.
3. Test the gas installation for soundness and purge in accordance with BS.6891: 1988. Refer to Servicing instructions.

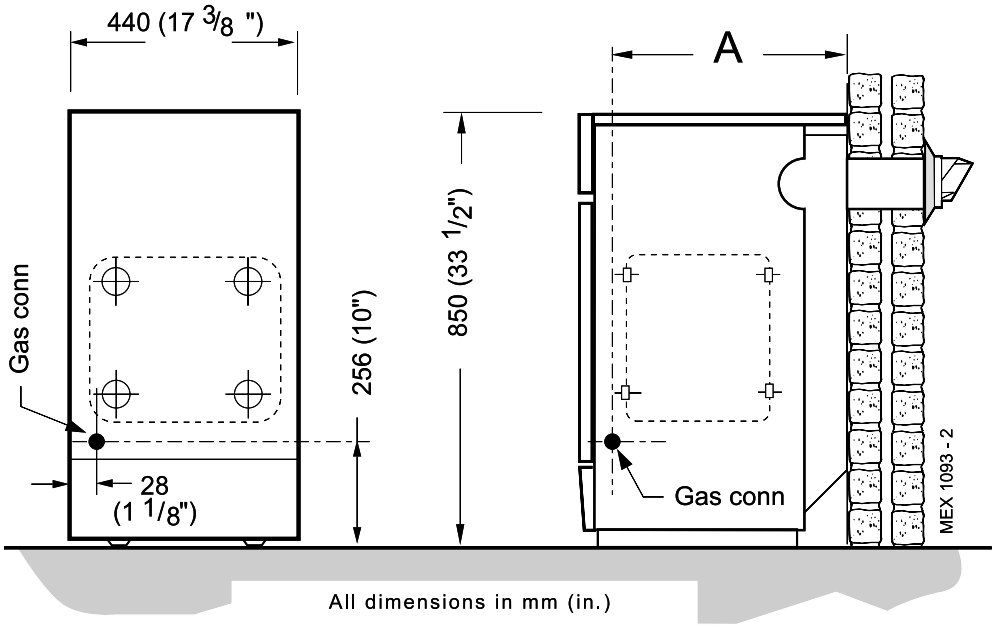

Boiler	Dimension A
100	473 (18 5/8")
125	546 (21 1/2")

32 WATER CONNECTIONS

1. Connect the system flow and return pipework to the boiler as appropriate. Refer to Frames 3,4, 5 and 6 for guidance on system design.

   Notes.

   Pumped flow and return pipes MUST be 28mm.

   Gravity connections MUST be 28mm (1").

2. Ensure that all valves are open. Fill and vent the system and check for water soundness.

   Notes.

   a. *Isolating valves must be fitted as close to the pump as possible.*

   b. *The boiler is not suitable for use with a direct hot water cylinder.*

33 ELECTRICAL CONNECTIONS

WARNING. The appliance must be efficiently earthed.

A mains supply of 230 V ~ 50 Hz is required.

All external controls and wiring must be suitable for mains voltage. Wiring should be in 3-core PVC insulated & sheathed cable, not less than 0.75mm² (24 x 0.2mm) to BS. 6500 Table 16 Wiring Regulations and local regulations.

Connection must be made in a way that allows complete isolation of the electrical supply - such as a double pole switch, having a 3mm (1/8") contact separation in both poles or a plug and socket, serving only the boiler and system controls. The means of isolation must be accessible to the user after installation.

1. Remove the securing screw and lift off the mains terminal box cover.
2. Route the mains cable from the LH rear of the boiler, along the front of the baseplate to the terminal box.

Note. *Leave sufficient length of cable to enable it to be routed as shown once the casing has been refitted and secure to the casing with the ties provided.*

3. Connect the live, earth & neutral wires into the terminal strip.
4. Secure the mains lead with the cable clamp.
5. Refit the terminal box cover.

IMPORTANT.
Control switching must not take place in this mains permanent supply.

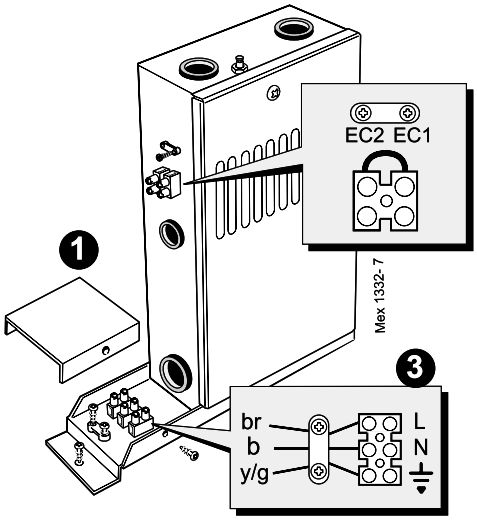

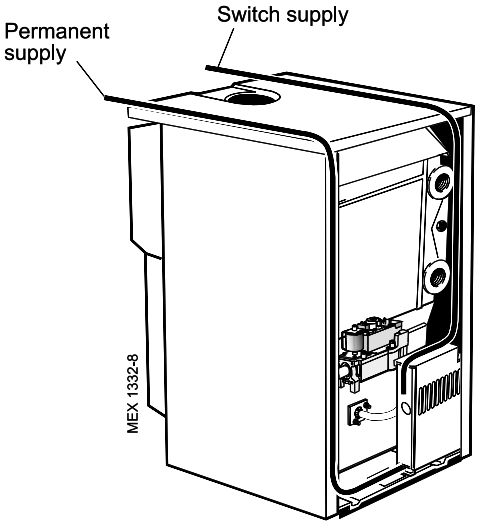

Notes.

1. *If a programmer is fitted refer to the instructions provided and Frame 35.*
2. *For gravity DHW applications the pump MUST be wired through the programmer.*

34 FLOW WIRING DIAGRAM

LEGEND

b	blue
bk	black
br	brown
gy	grey
or	orange
p	pink
r	red
v	violet
w	white
y/g	yellow/green

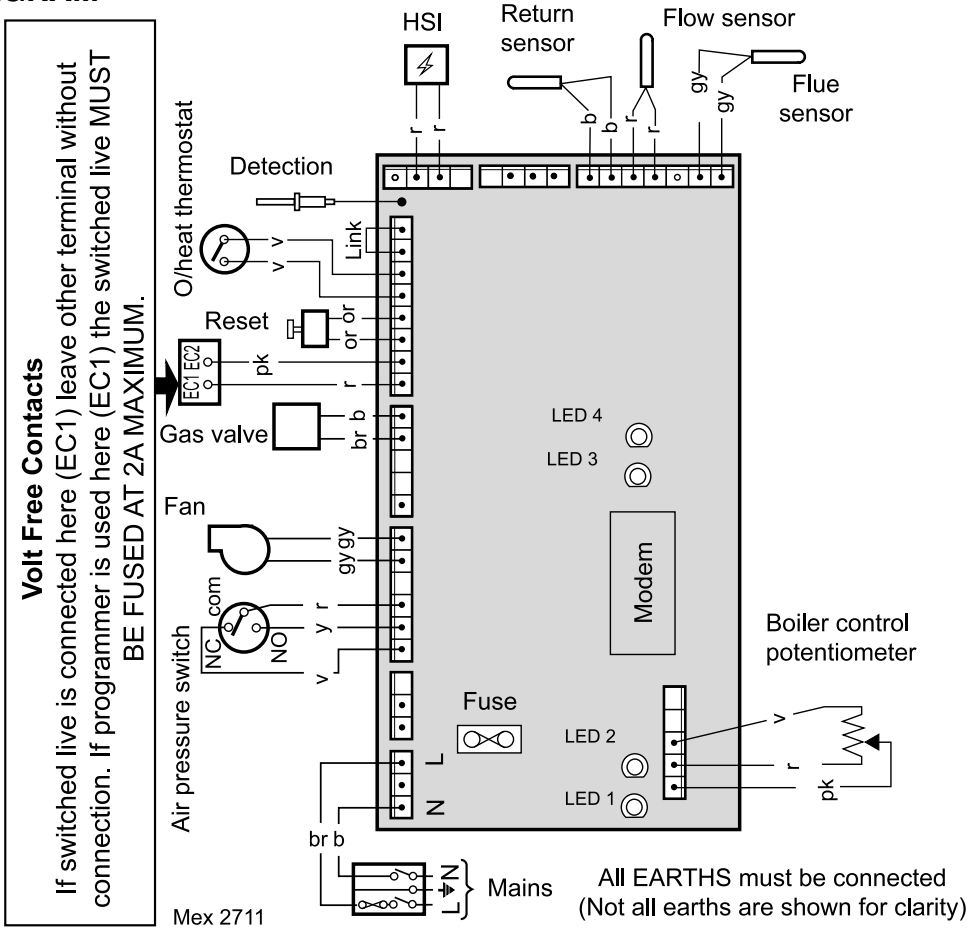

35 EXTERNAL CONTROLS

The wiring diagrams illustrated in Frames 37-39 cover the systems most likely to be fitted to this appliance.
For wiring external controls to the British Gas RD2 boiler, reference should be made to the system wiring diagrams supplied by the relevant manufacturer, in conjunction with the wiring diagrams shown in Frame 33.
Difficulty in wiring should not arise, providing the following directions are observed:

1. **Preferred Wiring Method.**
   Controls that switch the system on or off, e.g. a time switch, must be wired, in series and terminate with a volt free contact across EC1/EC2.
2. **Alternative Wiring Method.** A switched live supply may be connected to EC1 (leaving EC2 without connection), which MUST BE fused at 2A MAXIMUM.

IMPORTANT.
A link wire between terminal EC1and EC2 is not acceptable.
Note. *Route the cable to terminals EC1 & EC2 from the RH rear of the boiler and across the top of the control box. Refer to Frame 33. Leave sufficient length of cable to enable it to be routed as shown once the casing has been fitted and secure to the casing with the ties provided.*

3. Controls that override an on/off control, e.g. frost thermostat must be wired, in parallel, with the control(s) to be overridden. Refer to Frame 40.
4. If a proprietary system is used, follow the instructions supplied by the manufacturer.
   Advice on required modifications to the wiring may be obtained from the component manufacturers.

Notes.

1. *Connection between a frost thermostat and the time control should be made without disturbing other wiring.*
2. *A frost thermostat should be sited in a cool place in the house, but where it can sense heat from the system.*

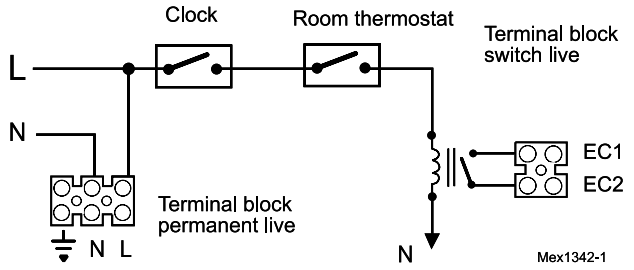

Preferred Wiring Method.

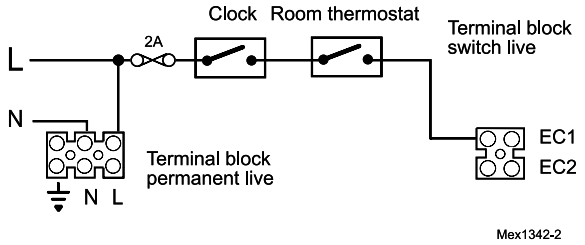

Alternative Wiring Method.

36 PICTORIAL WIRING

"Note 1"

Volt Free contacts
*If switched live is connected here (EC1) leave other terminal without connection. If programmer is used here (EC1) then the switched live MUST BE FUSED at **2A Max**.*

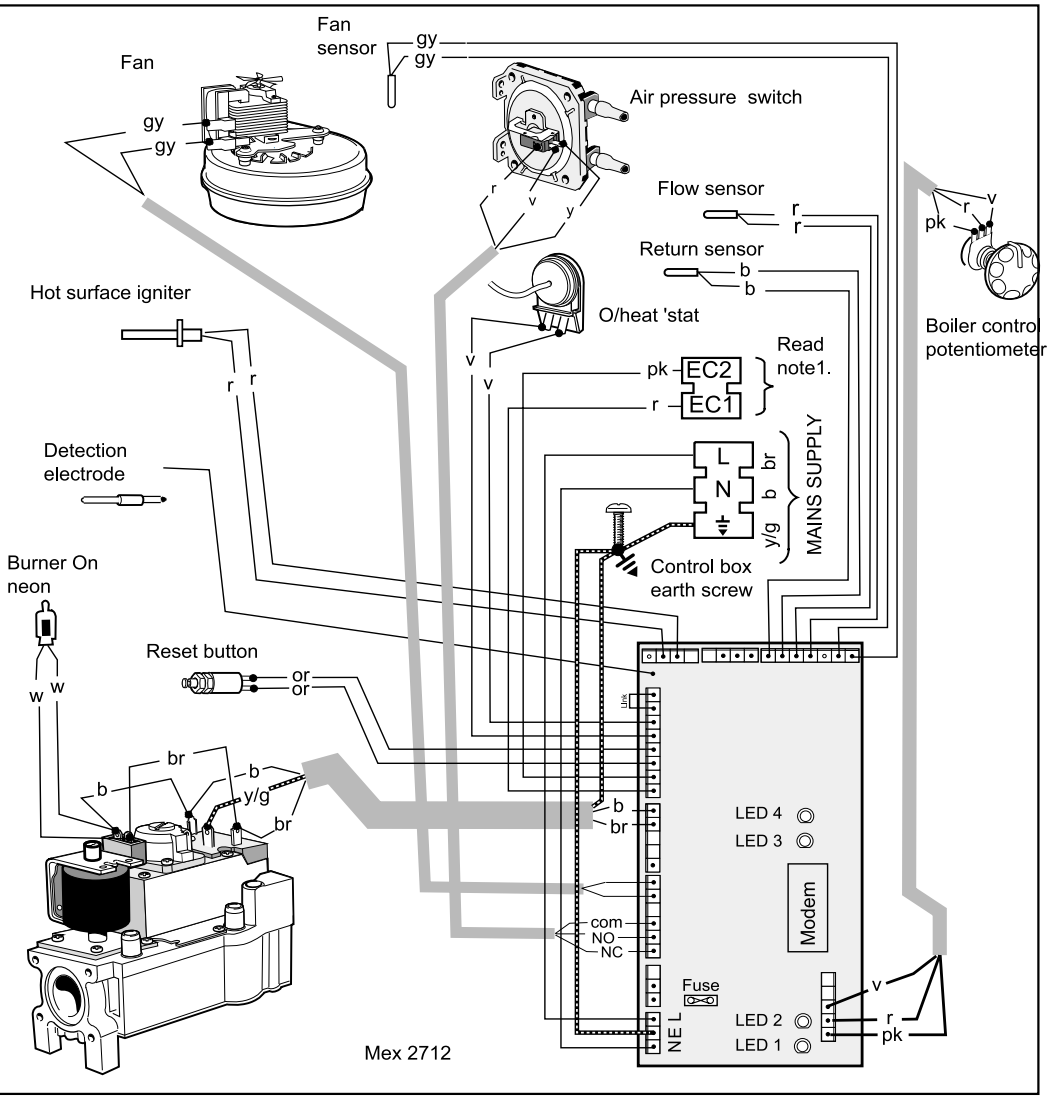

LEGEND

b	blue
bk	black
br	brown
gy	grey
or	orange
p	pink
r	red
v	violet
w	white
y/g	yellow/green

37 MID POSITION VALVE

Pumped only

Notes.

1. *Some earth wires are omitted for clarity. Ensure proper earth continuity when wiring.*
2. *For numbering of terminals on thermostats see the manufacturer's literature.*
3. *This is a fully controlled system - set the boiler thermostat to maximum.*
4. *'Switchmaster ' (Smiths) valves are similar but the wiring is different. Consult the diagram supplied with the valve.*

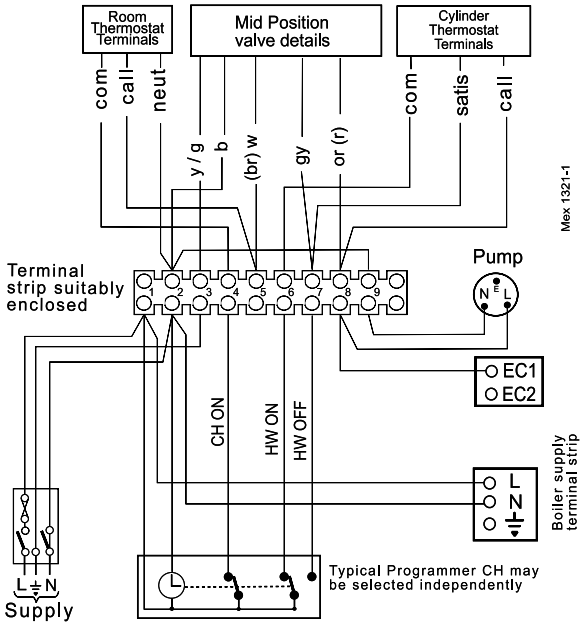

LEGEND		**br**	brown	**w**	white
b	blue	**r**	red	**gy**	grey
bk	black	**or**	orange	**y/g**	yellow/green

38 TWO SPRING CLOSED VALVES

Pumped only

Notes.

1. *Some earth wires are omitted for clarity. Ensure proper earth continuity when wiring.*
2. *For numbering of terminals on thermostats see the manufacturer's literature.*
3. *This is a fully controlled system - set the boiler thermostat to maximum.*
4. *'Switchmaster' (Smiths) valves are similar but note that the GREY (NOT the orange) wire MUST be the one connected to permanent L.*

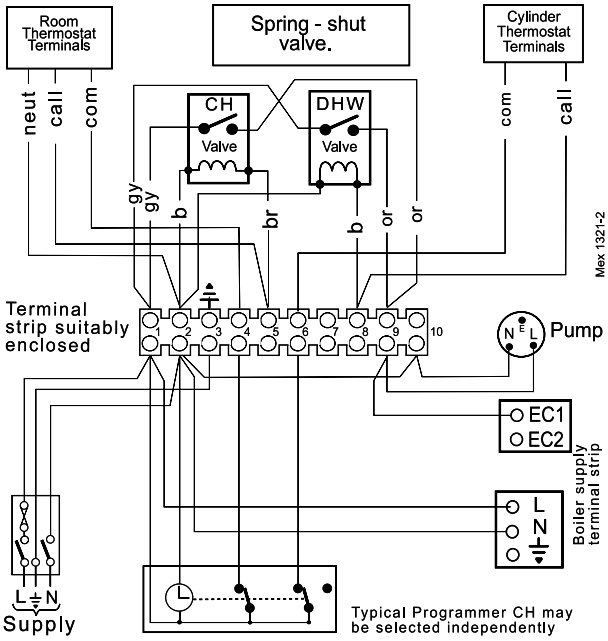

LEGEND		**br**	brown	**or**	orange
b	blue	**r**	red	**y/g**	yellow/green
bk	black	**w**	white	**gy**	grey

39 HONEYWELL 'C' PLAN

Gravity HW & Pumped CH

IMPORTANT
The pump must not be wired directly to the boiler.

Notes.

1. *Some earth wires are omitted for clarity. Ensure proper earth continuity when wiring*
2. *For numbering of terminals on thermostats see the manufacturer's literature.*

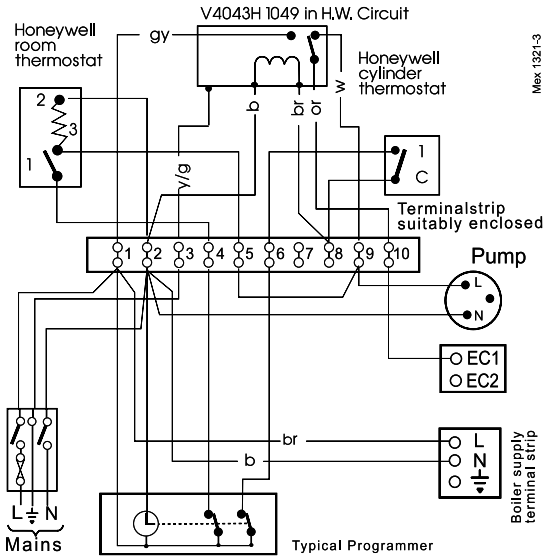

LEGEND		**bk**	black	**b**	blue
w	white	**br**	brown	**gy**	grey
r	red	**or**	orange	**y/g**	yellow/green

40 FROST PROTECTION

Central heating systems fitted wholly inside the house do not normally require frost protection as the house acts as a 'storage heater' and can normally be left at least 24 hrs. without frost damage. However, if parts of the pipework run outside the house or if the boiler will be left off for more than a day or so then a frost 'stat should be wired into the system.

This is usually done at the programmer, in which case the programme selector switches are set to OFF and all other controls MUST be left in the running position.

The frost 'stat should be sited in a cold place but where it can sense heat from the system.

Wiring should be as shown, with minimal disturbance to other wiring of the programmer.

Designation of the terminals will vary, but the programmer and thermostat manufacturer's leaflets will give full details.

Diagram A shows a double pole frost thermostat, which should suffice for all systems which do not use the OFF terminals of the programmer.

Clock with volt free contacts should be used.

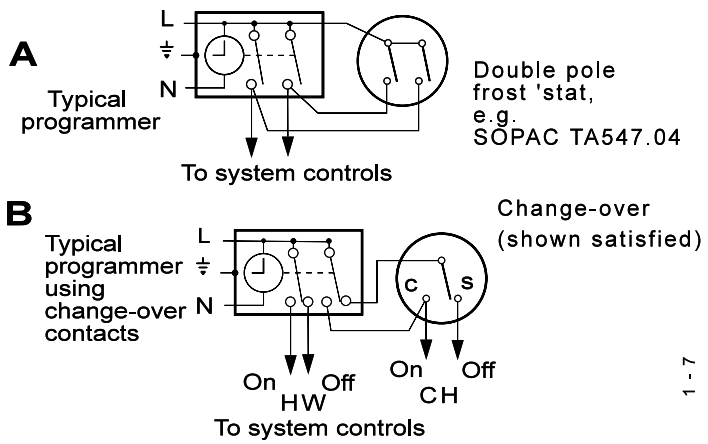

Diagram B shows a 'change-over' frost thermostat, which will cover most systems which do use CH OFF. If, however, on such a system the HW pipework is in an isolated part of the house, a second frost thermostat may be used to protect it.

If in doubt, ask your installer for advice.

41 FITTING THE CASING & CONTROL SENSORS

1. Offer up the RH side panel, locating it with the peg in the baseplate, and push the panel back engaging it into the collector hood tab.
2. Secure the panel to the baseplate and turret front panel.
3. Repeat steps 1 and 2 to refit the LH side panel.
4. Refit the control box by locating it on the peg under the RH side and securing with the M5 screw at the LH side.
5. Insert the flow temperature sensor (red lead) to the full depth of the pocket and secure the retaining plate with the screw provided.
6. Insert the return temperature sensor (blue lead) to the full depth of the pocket and secure with the Heyco bush provided.
7. Carefully uncoil the overheat thermostat capillary wihtout kinking it andfit the sensor into the overheat thermostat pocket, securing it with the hook plate and screw as shown. Route the capillary clear of the combustion chamber.
8. Ensure that the reset button on the overheat thermostat is pressed in.

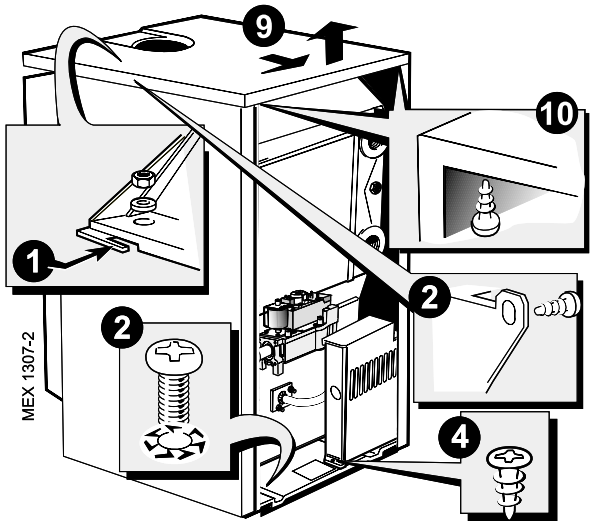

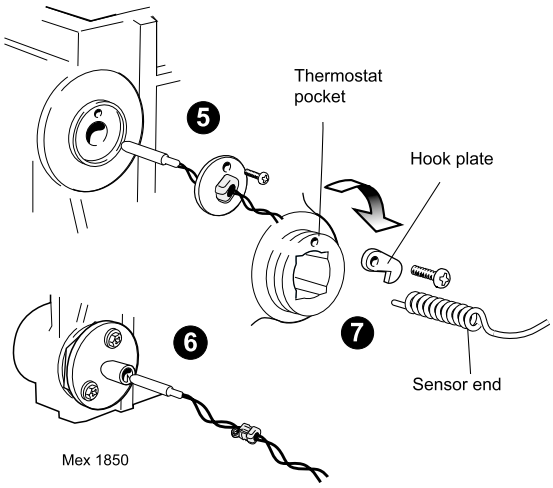

9. Place the top panel and push back.
10. Secure the panel to the side panels.
11. Refit the control panel using the screws previously removed.
12. Relocate the 'Burner on' neon in the lens holder at the back of the control panel.
13. Fit the control thermostat to the rear of the control panel using the 2 screws provided. Fit the correct way up as shown (**T**).

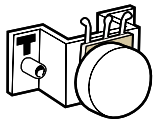

14. Fit the control thermostat knob.
15. Secure the wiring harnesses in the edge clips on the RH side panel..
16. Secure all other internal wiring.

IMPORTANT. Wiring within the boiler casing must be neatly secured with the cable straps provided and MUST NOT be allowed to touch the fan cooling impellor, the burner front plate, or the cleanout cover and the collector hood.

17. Refit the grille assembly.

42 COMMISSIONING AND TESTING

A. ELECTRICAL INSTALLATION

1. Checks to ensure electrical safety should be carried out by a competent person.

2. ALWAYS carry out preliminary electrical system checks, i.e. earth continuity, polarity, resistance to earth and short circuit using a suitable test meter.

B. GAS INSTALLATION

1. The whole of the gas installation, including the meter, MUST be inspected and tested for soundness, and purged in accordance with the recommendations of BS. 6891.
2. Purging air from the gas installation may be expedited by loosening the union on the gas service cock on the boiler and purging until gas is detected.
3. Retighten the union and check for gas soundness.

WARNING. Whilst effecting the required gas soundness test and purging air from the gas installation, open all windows and doors, extinguish naked lights and **DO NOT SMOKE.**

43 INITIAL LIGHTING

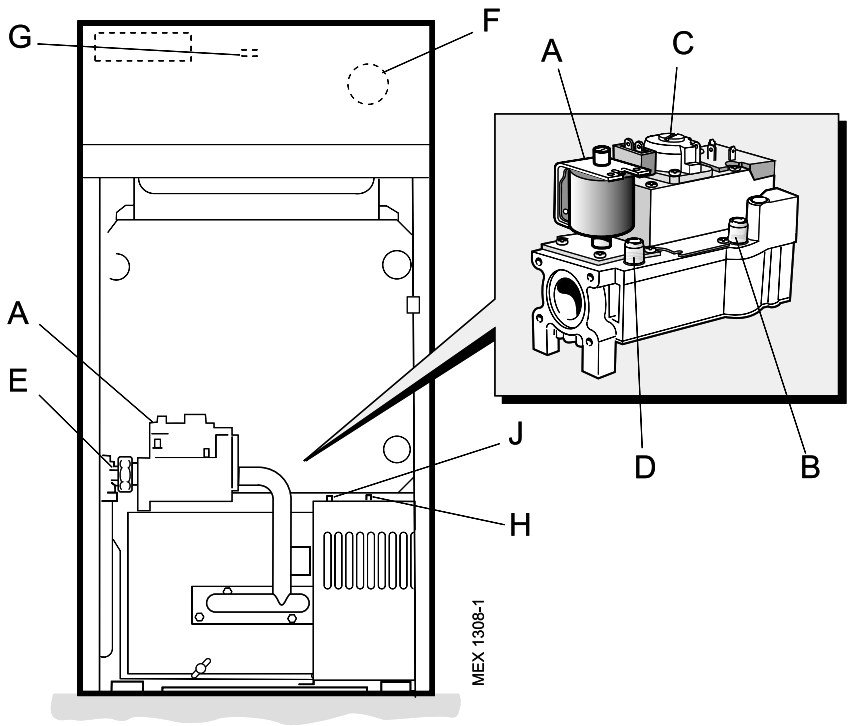

LEGEND

A. Gas control valve.

B. Burner pressure test point.

C. Main burner pressure adjuster.

D. Inlet pressure test point.

E. Gas service cock.

F. Boiler thermostat knob.

G. 'Burner 'On' neon.

H. Overheat thermostat reset button.

J. Lock out reset button.

TO LIGHT THE BOILER

1. Check that all the drain cocks are closed and any valves in the flow and return are open.
2. Check that the gas service cock [E] is OPEN and the boiler thermostat [F] is OFF.
3. Slacken the screw in the burner pressure test point [B] and connect a gas pressure gauge via a flexible tube.
4. Switch the electricity supply ON and check that all external controls are calling for heat.
5. Press the reset button (J) and the overheat thermostat reset button (H).
6. Set the boiler thermostat knob [F] to position 6. The fan will start. After the fan has run for a few seconds the igniter will be energised. The gas valve will open and the main burner will then cross-light smoothly. The boiler may attempt 5 ignitions. If this fails, the boiler requires to be manually reset by pressing the reset button. If this sequence does not occur, refer to the Fault Finding section.
7. Test for gas soundness around ALL boiler gas components using leak detection fluid.
8. Operate the boiler for 10 minutes to stabilise the burner temperature.
9. The boiler is preset at the factory to its nominal rating. If adjustment is necessary remove the sealing cap and turn the adjusting screw [C] clockwise to increase/anticlockwise to decrease the pressure until the required burner pressure is achieved.

   Refit the sealing cap.
10. Set the boiler thermostat to (F) OFF.
11. Remove the pressure gauge and tube. Retighten the sealing screw in the pressure test point.
12. Turn ON and check for gas soundness at the pressure test point.
13. Refit the lower front panel and secure with the 2 fixing screws.
14. Finally stick the appropriate British/Scottish Gas logo (supplied) in the marked area at the top LH corner of the controls panels door.

44 GENERAL CHECKS

Make the following checks for correct operation:

1. Turn the boiler thermostat OFF and ON to check that the main burner is extinguished and relit in response.
2. Set the boiler thermostat knob to position 6 and operate the mains on/off switch. Check that the main burner lights and extinguishes in response.
3. Check that the programmer, if fitted, and all other system controls function correctly.

   Operate each control separately and check that the main burner or circulating pump (as the case may be) responds.
4. **Water circulation System**
   - **a.** With the system HOT, examine all water connections for soundness.
   - **b.** With the system still hot, turn off the gas, water and electricity supplies to the boiler and drain down, in order to complete the flushing process.
   - **c.** Refill and vent the system, clear all air locks and again check for water soundness.
   - **d.** Balance the system.
5. Finally, set the controls to the user's requirements and close the controls door.

Thermostat Knob Setting	Flow Temperature °C	°F
2	60	140
3	66	150
4	71	160
5	77	170
6	82	180

Note.

- *The temperatures quoted above are approximate and vary between installations.*

WARNING. **The boiler must not be operated with the casing removed.**

45 HANDING OVER

After completing the installation and commissioning of the system the installer should hand over to the householder by the following actions:

1. Hand the User's Instructions to the householder and explain his or her responsibilities under the current Gas Safety (Installation and Use) Regulations or the rules in force.
2. Draw attention to the lighting instruction label affixed to the inside of the controls door.
3. Explain and demonstrate the lighting and shutting down procedures.
4. The operation of the boiler and the use and adjustment of ALL system controls should be fully explained to the householder, to ensure the greatest possible fuel economy consistent with household requirements of both heating and hot water consumption.

   Advise the User of the precautions necessary to prevent damage to the system and to the building in the event of the system remaining inoperative during frosty conditions.
5. Explain the function and the use of the boiler thermostat and external controls.
6. Explain the function of the boiler overheat thermostat and emphasise that if cutout persists, the boiler should be turned off and a CORGI registered installer consulted.
7. Explain and demonstrate the function of time and temperature controls, radiator valves etc., for the economic use of the system.
8. If any programmer is fitted then draw attention to the programmer User's Instructions and hand them to the householder.

   After installation, commissioning and customer hand-over, please complete the benchmark appliance log book and leave this with the customer.
9. Stress the importance of regular servicing by a CORGI registered installer and that a comprehensive service should be carried out AT LEAST ONCE A YEAR.
10. As the installer you may wish to undertake the service contract yourself or alternatively offer to the customer the benefits of the British Gas Services, details of which are outlined in the household pack supplied with this boiler.

46 SCHEDULE

WARNING.
BEFORE SERVICING always turn OFF the gas supply at the gas service cock and switch OFF and DISCONNECT the electrical supply to the appliance.

British Gas services recommend that appliances are regularly serviced at 12 month intervals. However, where an applience is being constantly monitored, as is the case with an RD technology boiler, the interval can be extended to 24 months without detriment to performance or reliability.

It is the law that any service work must be carried out by a CORGI registered instatller.

a. Light the boiler and carry out a pre-service check, noting any operational faults.

b. Operate the boiler for at least 20 minutes. Check the gas consumption.

c. Connect a suitable gas analyser to the sampling point on the flue collector. Refer to Frame 50.

For correct operation the CO/CO_2 content of the flue gas should not be greater than 0.004 ratio. If this is the case and the gas input is within 95% of the nominal then no further action need be taken. If not the case, proceed to step (d)

d. Clean the main burner. Refer to Frame 49.

e. Clean the heat exchanger. Refer to Frame 50.

f. Clean the main injectors. Refer to Frame 49.

g. Check that the flue terminal is unobstructed and that the flue system is sealed correctly.

h. If the appliance has been installed in a compartment, check that the ventilation areas are clear.

The servicing procedures are covered more fully in Frames 47 to 52 and MUST be carried out in sequence.

Note.
In order to carry out either servicing or replacement of some components, the boiler casing must removed. Refer to Frame 47.

IMPORTANT. After completing the servicing or exchange of components always test for gas soundness and carry out functional checks as appropriate.
When the work is complete the casing MUST be correctly refitted and secured.
The boiler must NOT be operated if the casing is not fitted.

47 BOILER CASING REMOVAL

1. Remove the 2 screws and lift off the lower front panel.

2. Remove the 2 screws and lift off the grille assembly.

3. Disconnect the electrical leads from the gas valve.

4. Release the 'Burner On' neon from the lens holder at the rear of the control panel.

5. Disconnect the thermostat from the control panel:

a. Pull off the thermostat knob.

b. Undo the 2 securing screws and withdraw the thermostat from the panel.

6. Remove the 2 screws securing the control panel and pull down to release the tabs from under the top panel.

7. If the boiler is not fitted under a work top, access for flue cleaning will be improved by removing the top panel:

a. Remove the 2 securing screws.

b. Pull the panel forward and lift off.

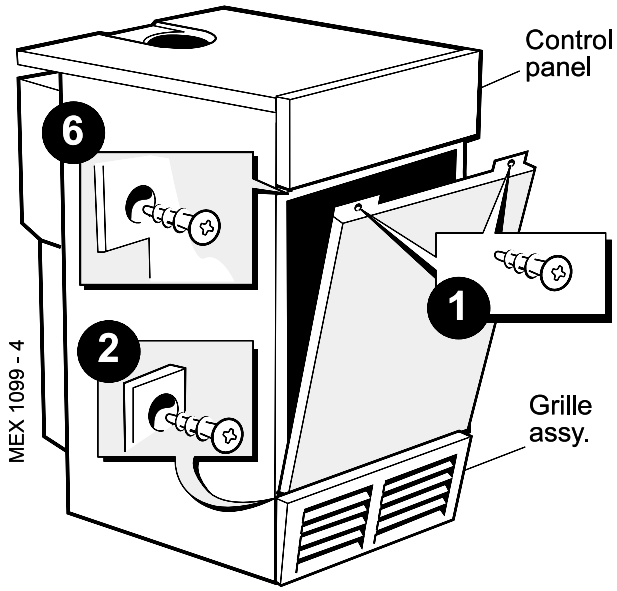

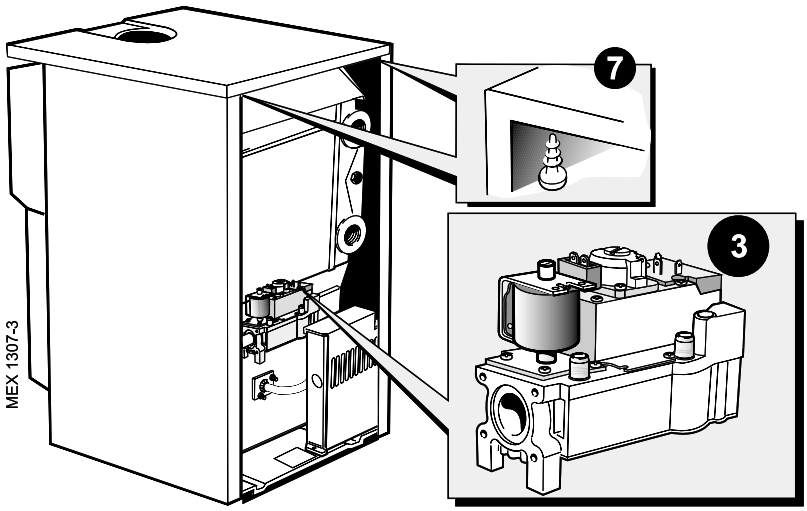

48 BURNER AND CONTROLS ASSEMBLY REMOVAL

1. Remove the control box cover.
2. Unplug the HSI lead from the PCB and withdraw it from the box.
3. Disconnect the detection lead from the electrode.
4. Remove the screw securing the control box to the baseplate, slide to the left to release and place to one side.
5. Undo the gas service cock union.
6. Remove the 4 wing nuts and withdraw the burner and controls assembly, complete, from the boiler.
7. Place on a convenient working surface.

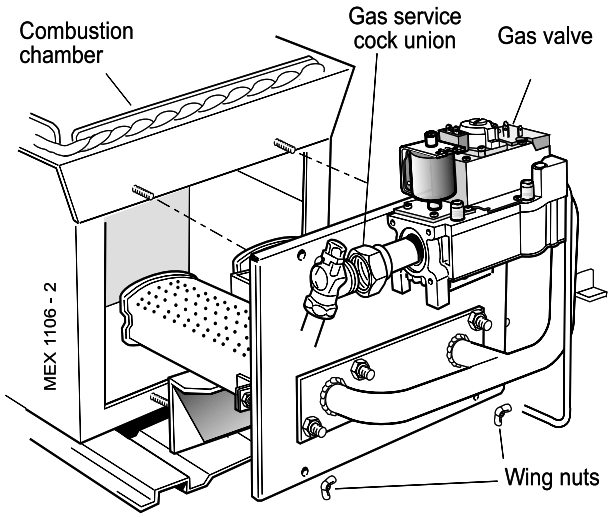

49 CLEANING THE BURNER ASSEMBLY

Note. *Brushes with metallic bristles MUST NOT be used.*

1. Brush off any deposits that may have fallen onto the burner heads (ensuring that the flame ports are unobstructed) and remove any debris that may have collected.
2. Remove the main burner injectors .Check, clean or replace, as required.
3. Refit the injectors, using an approved jointing compound.
4. Inspect the ignition/detection electrodes; ensure they are clear and in good condition.

Check that:

a. The HSI and detection electrodes are clean and undamaged.

b. The HSI and detection leads are in good condition.

c. The position of the HSI and detection electrodes relative to the burner are correct. Refer to Frame 54 & 57.

5. Clean or renew components as necessary.

50 CLEANING THE FAN/FLUEWAYS

1. Remove the silicon rubber tube from the fan pressure sensing point.
2. Disconnect the fan leads.
3. Remove the screw and withdraw the fan thermistor sensor from the scroll.
4. Disconnect the silicon rubber tube from the top of the collector hood.
5. Remove the 4 M4 screws on the top of the collector hood and by sliding it forwards remove collector hood/fan assembly.
6. Check that the fan impellor runs freely. Remove any debris from the impellor with a soft brush.
7. Remove the flue baffles.
8. Remove all loose deposits from the heat exchanger, particularly between the fins, using a suitable brush.
9. Re-assemble in reverse order. Lubricate fan 'O' ring with silicon grease. Ensure the fan leads, 2 sensing tubes and fan sensor are reconnected.

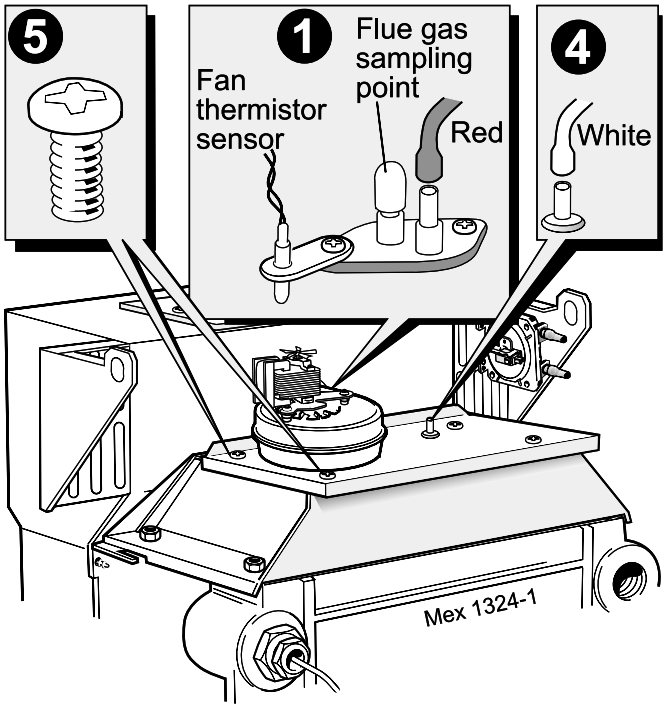

51 RE-ASSEMBLY

Re-assemble the boiler in the following order:

1. Refit the flue baffles.
2. Inspect the collector hood rope gasket and replace, if necessary, ensuring that the self adhesive rope is fitted centrally on to the lip of the collector hood / fan assembly. The boiler efficiency will be adversely affected if incorrectly fitted. Refit the collector hood cover with the 4 screws. Tighten the screws. Ensure that the sealing gasket is compressed. Refit the pressure pipe.
3. Refit the positive pressure tubes on the top of the fan housing. Reconnect the electrical leads.
4. Refit the thermistor sensor and secure with the M4 screw.
5. Refit the burner assembly.
6. Reconnect the gas supply and the electrical wiring.
7. Refit the control box.
8. Check for gas soundness. Check the gas service cock and pressure test point.
9. Refit the boiler top panel, control panel and grille assembly.

52 GAS PRESSURE ADJUSTMENT

Main Burner Pressure

After servicing, reference should be made to Table 1, which quotes details of the rated output with the related burner pressure and heat input. Any required adjustments should be made using the pressure adjustment screw. Refer to Frame 41- Initial Lighting.

Refit the lower front panel and secure with the 2 fixing screws.

REPLACEMENT OF PARTS

53 GENERAL

When replacing any component:

1. Isolate the electricity supply.
2. Turn OFF the gas supply.
3. Remove the lower front panel and grille assembly. Refer to Frame 47.

IMPORTANT.

The original routing of wires must be adhered to when replacing the electrical components.

The boiler MUST NOT be operated if the casing is not fitted.

54 HOT SURFACE IGNITER (HSI) REPLACEMENT

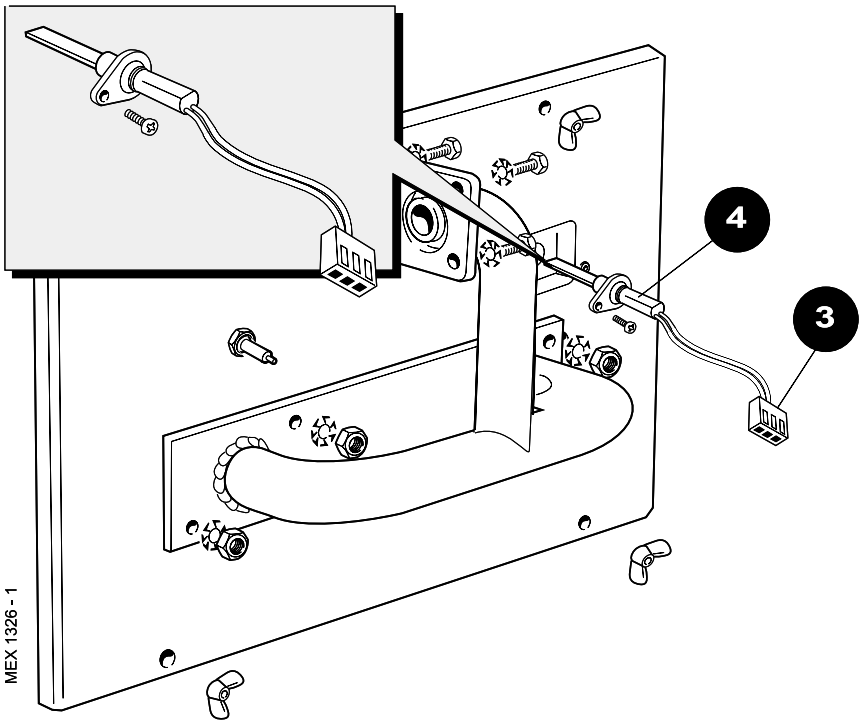

1. Remove the lower front panel and grille assembly. Refer to Frame 47.
2. Remove the securing screw and lift off the control box cover.
3. Unplug the HSI lead from the PCB and withdraw it from the control box.
4. Remove the securing screw and withdraw the HSI from the burner front plate.
5. Fit the new HSI and reassemble in reverse order.
6. Check that the position of the HSI relative to the burner is correct.
7. Check the operation of the boiler.

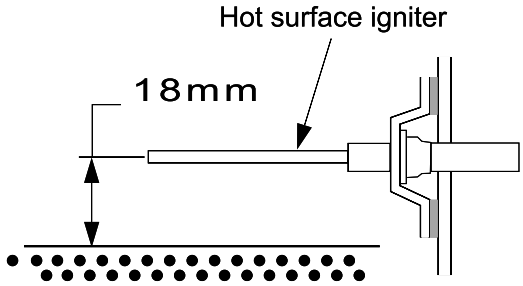

Mex 1326-2

55 CONTROL THERMOSTAT POTENTIOMETER REPLACEMENT

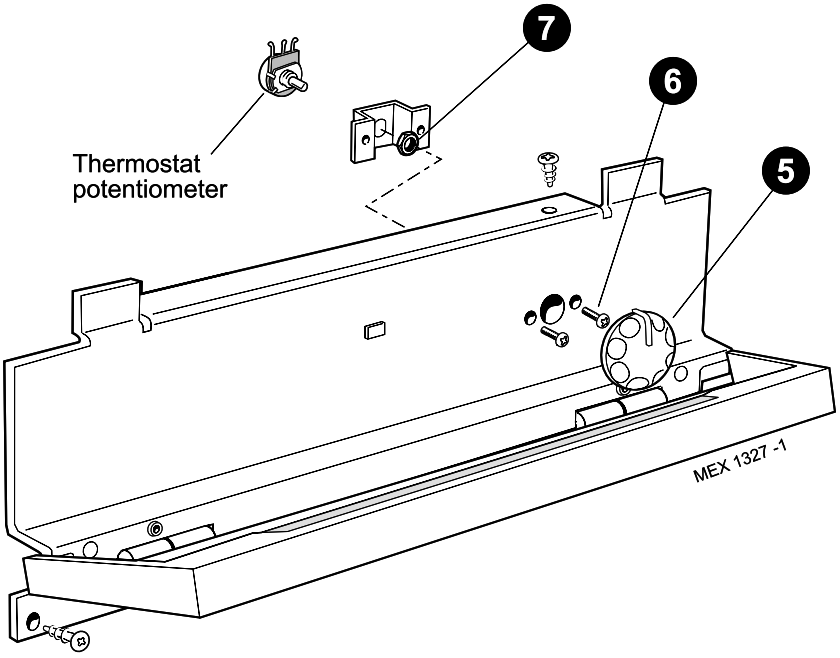

1. Remove the lower front panel and grille assembly. Refer to Frame 47.
2. Remove the control box cover.
3. Unplug the potentiometer lead from the PCB and withdraw it from the control box.
4. Disengage the lead from the retaining clips
5. Pull off the thermostat knob.
6. Remove the 2 screws securing the potentiometer to the control panel.
7. Remove the backnut securing the potentiometer to the bracket.
8. Fit the new potentiometer and reassemble in reverse order.
9. Check the operation of the boiler.

56 CONTROLS PANEL REPLACEMENT

1. Remove the lower front panel/grille assembly and control panel. Refer to Frame 47.
2. Remove the control thermostat potentiometer. Refer to Frame 55.
3. Unclip the 'Burner On' neon from the lens holder.
4. Fit the new control panel and re-assemble in reverse order.
5. Check the operation of the boiler.

57 FLAME DETECTION ELECTRODE AND LEAD REPLACEMENT

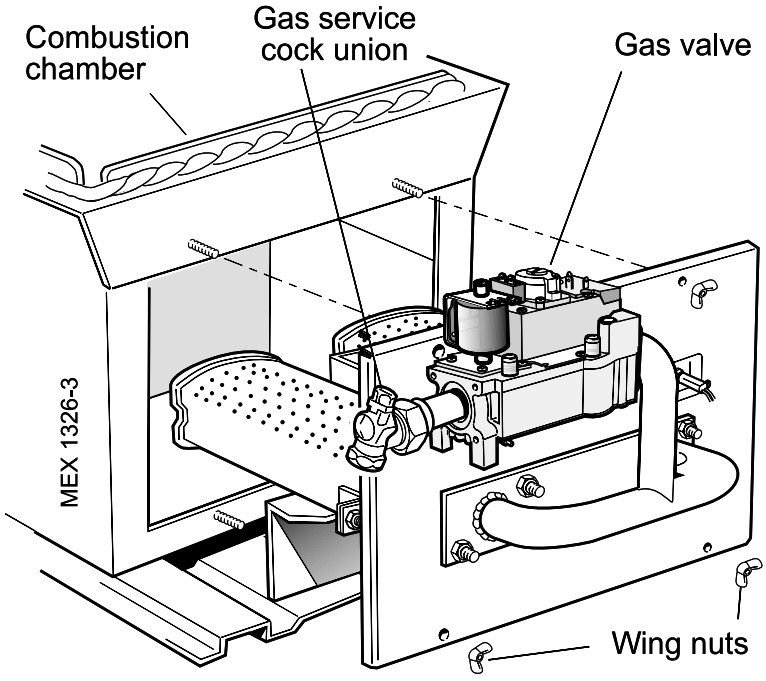

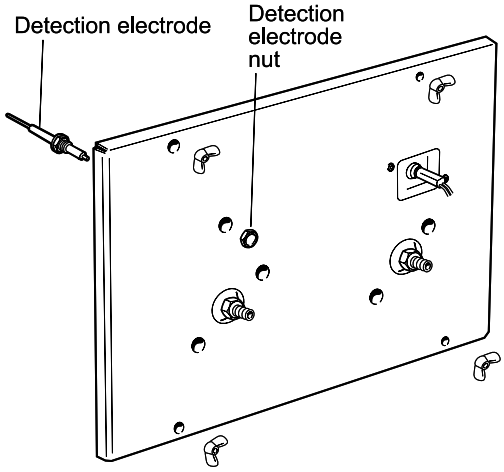

1. Remove the lower front panel/grille assembly. Refer to Frame 47.
2. Remove the burner and controls assembly.
   - **a.** Remove the control box cover.
   - **b.** Unplug the HSI lead from the PCB and withdraw it from the box.
   - **c.** Disconnect the detection lead from the electrode.
   - **d.** Remove the screw securing the control box to the baseplate, slide to the left to release and place to one side.
   - **e.** Disconnect the electrical leads from the gas valve.
   - **f.** Undo the gas service cock union.
   - **g.** Remove the 4 wing nuts and withdraw the burner and controls assembly, complete, from the boiler
3. Remove the detection electrode retaining nut and withdraw the electrode from the front plate.
4. Fit the new electrode and reassemble in reverse order.
5. Check that the position of the electrode relative to the burner is correct.
6. Check the operation of the boiler.

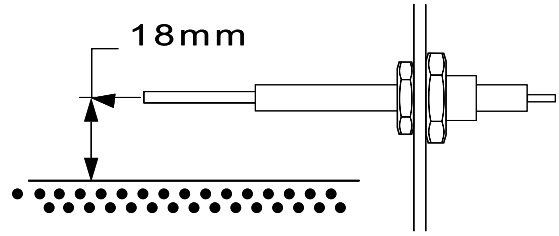

Mex 1326-4

58 MAIN BURNER REPLACEMENT

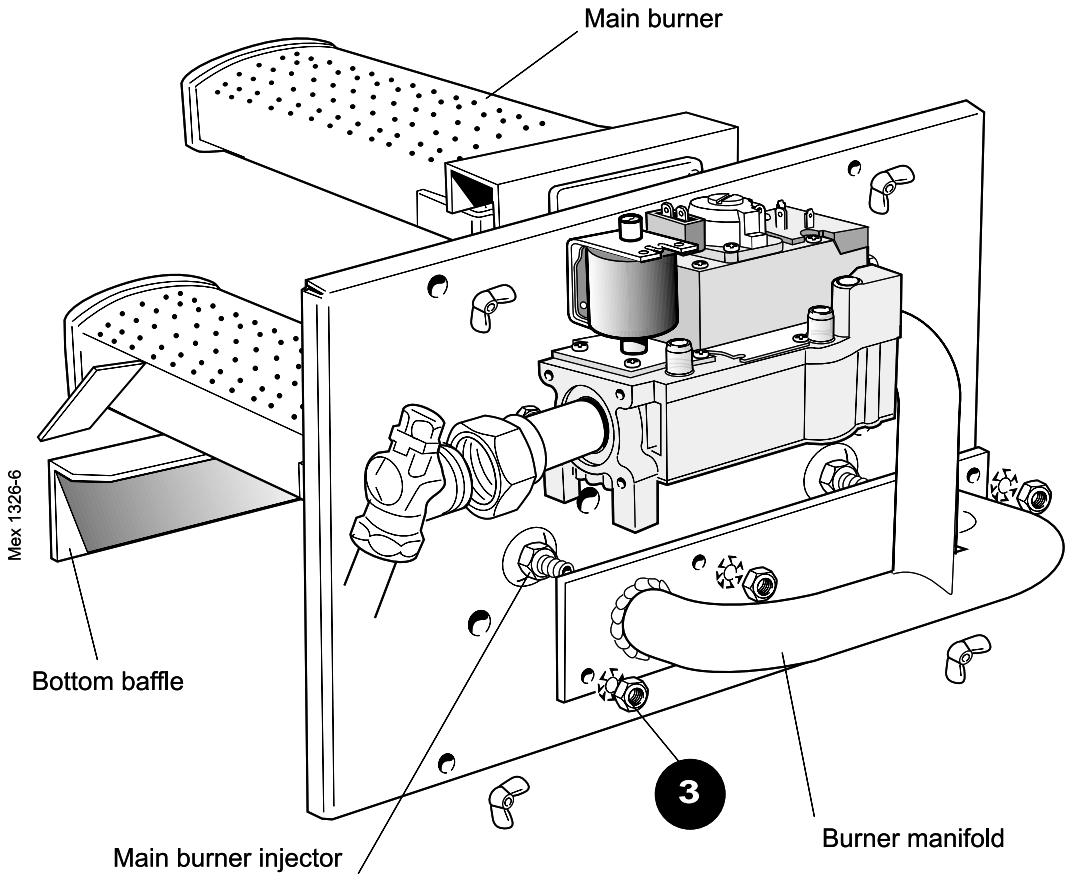

1. Remove the lower front panel/grille assembly. Refer to Frame 47.
2. Remove the burner and controls assembly. Refer to Frame 57.
3. Remove the 2 nuts and washers securing the burner to the front plate and manifold. Withdraw the burner.
4. Fit the new burner and re-assemble in reverse order, taking care not to damage the main burner injector which is screwed into the burner manifold.
5. Check the operation of the boiler.

59 MAIN BURNER INJECTOR REPLACEMENT

1. Remove the lower front panel/grille assembly. Refer to Frame 47.
2. Remove the burner and controls assembly. Refer to Frame 57.
3. Undo the manifold securing nuts and remove the manifold from the front plate.
4. Unscrew the burner injector from the manifold.
5. Fit the new injector, using an approved jointing compound, and re-assemble in reverse order.
6. Check the operation of the boiler.

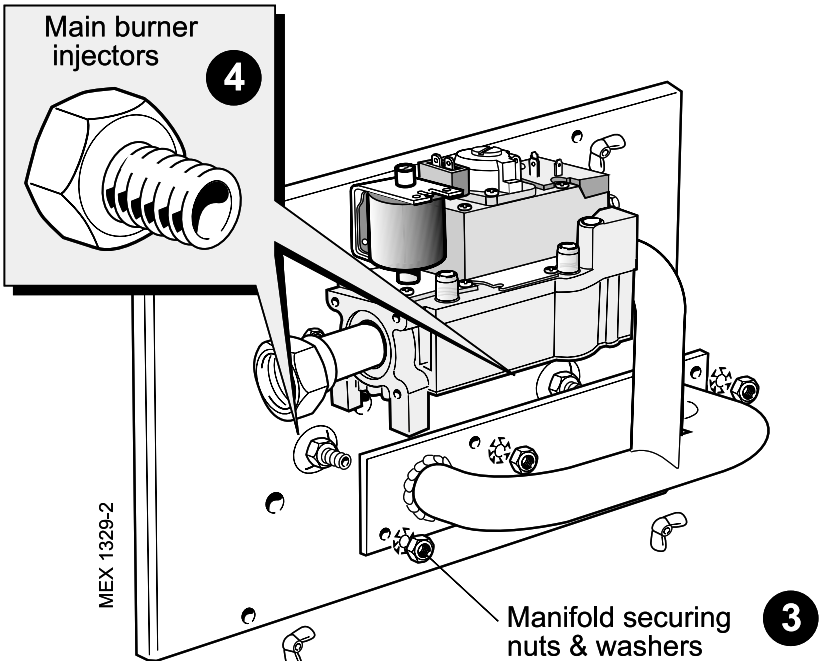

60 GAS VALVE REPLACEMENT

1. Remove the lower front panel and grille assembly. Refer to Frame 47.
2. Remove the burner and controls assembly. Refer to Frame 57.
3. Unscrew the gas inlet pipe from the valve.
4. Remove the 4 securing screws and withdraw the valve from the burner manifold.
5. Fit the new gas valve, ensuring that:
   - **a.** The valve is fitted the correct way round - an arrow engraved on the valve indicates the direction of flow.
   - **b.** The sealing 'O' ring supplied with the valve is correctly fitted at the outlet flange.
   - **c.** An approved jointing compound is used when reconnecting the gas inlet pipe.
6. Reassemble in reverse order.
7. Check the operation of the boiler.

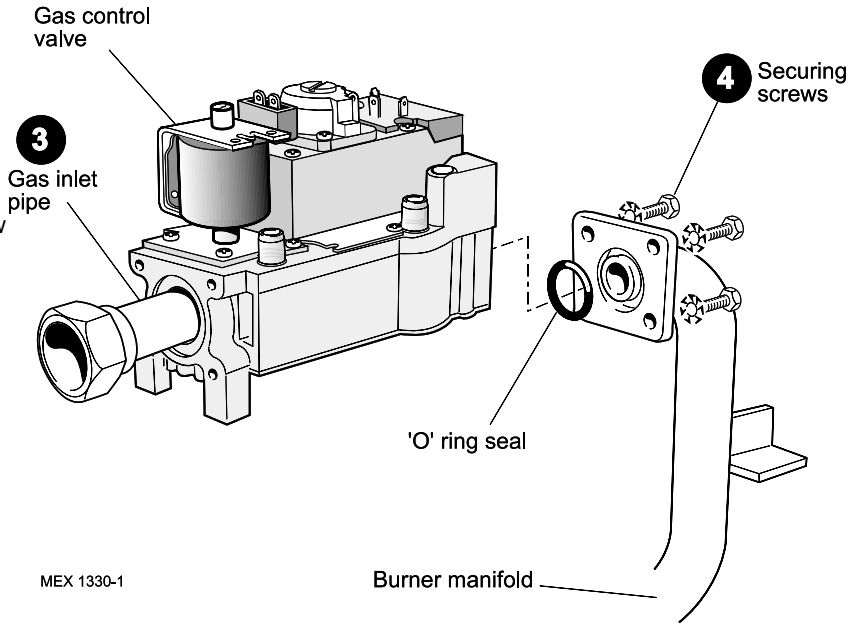

61 FAN REPLACEMENT

1. Remove the lower front panel, control panel and top panel. Refer to Frame 47.
2. Remove the silicon rubber tube from the fan pressure sensing point.
3. Disconnect the fan leads.
4. Remove the securing screw and withdraw the fan thermistor sensor from the scroll.
5. Disconnect the silicon rubber tube from the top of the collector hood.
6. Remove the 4 M4 screws on the top of the collector hood and by sliding it forwards remove collector hood / fan assembly.
7. Remove the three M4 screws retaining the fan to the collector hood.
8. Fit the new fan and re-assemble in reverse order. Lubricate fan 'O' ring with silicon grease. Ensure the fan leads, 2 sensing tubes and fan sensor are reconnected.
9. Check the operation of the boiler.

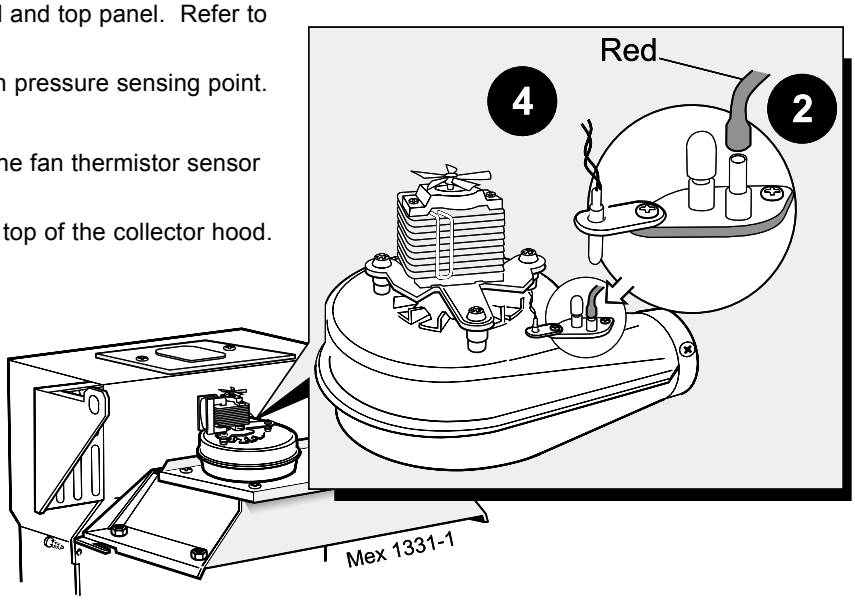

62 AIR PRESSURE SWITCH (APS) REPLACEMENT

1. Remove the lower front panel, control panel and the top panel. Refer to Frame 47.
2. Remove the APS fixing screw.
3. Remove both sensing tubes from the APS.
4. Remove the 3 electrical connections from the APS.
5. Fit the new APS and reassemble in reverse order.
6. Check the operation of the boiler .

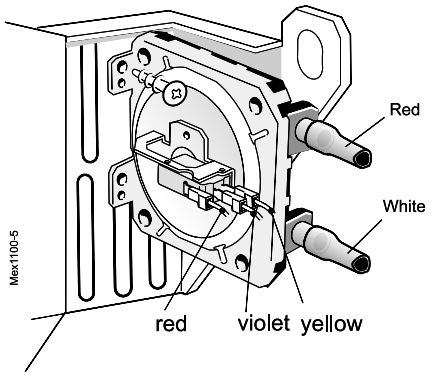

63 PRINTED CIRCUIT BOARD (PCB) REPLACEMENT

IMPORTANT.
Any failure indicating a PCB fault should be confirmed before replacing the PCB by ensuring that all electrical connections are correctly made (Check pin alignment) and secure.

1. Remove the lower front panel and grille assembly. Refer to Frame 47.
2. Remove the control box cover.
3. Disconnect the detection electrode lead from the PCB.
4. Unplug all Molex connectors from the PCB.
5. Disengage the PCB from the stand-offs to release and remove it from the box.
6. Fit the new PCB and re-assemble in reverse order.
7. Check the operation of the boiler.

Fuse.
To change the fuse, prise the top off the holder and disengage the fuse. Refer to Frame 34 for location.

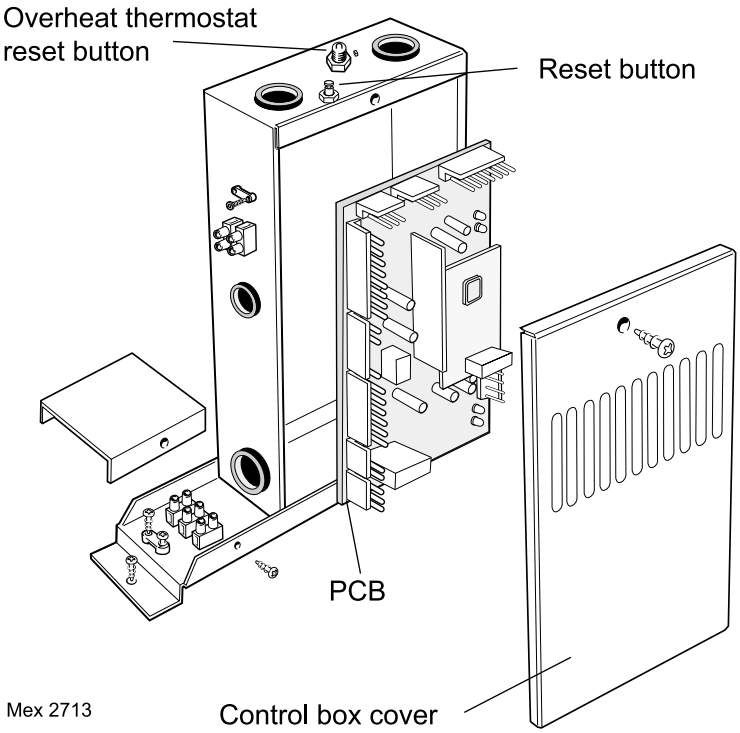

64 THERMISTOR SENSOR LEAD HARNESS REPLACEMENT

1. Remove the lower front panel and grille assembly. Refer to Frame 47.
2. Remove the control box cover. Refer to Frame 63.
3. Unplug the 7-way Molex connector (carrying 6 wires) from the top of the PCB.
4. Withdraw the leads from the control box and disengage them from the retaining clips.
5. Remove the retaining screw and withdraw the flow thermistor sensor from its pocket.
6. Compress the Heyco bush and withdraw the return thermistor sensor from its pocket.
7. Remove the securing screw and withdraw the fan thermistor sensor from the fan scroll.
8. Withdraw the complete harness from the boiler.
9. Fit the new harness and reassemble in reverse order.
10. Check the operation of the boiler.

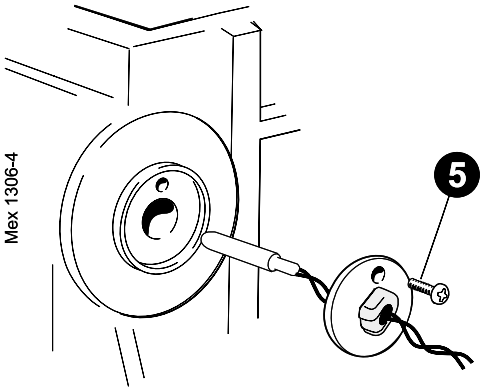

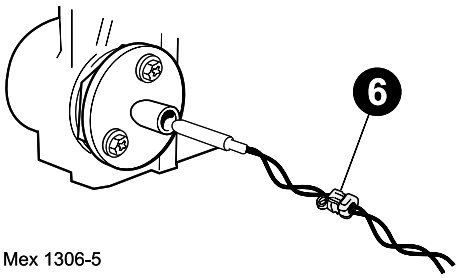

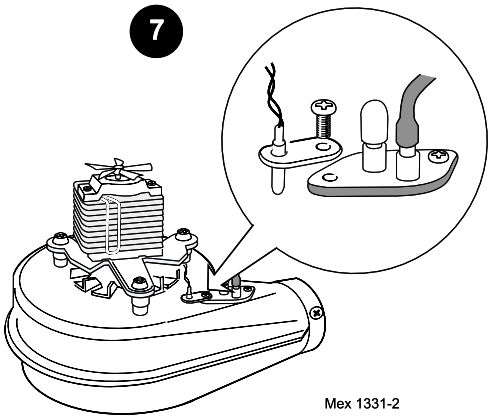

65 OVERHEAT THERMOSTAT REPLACEMENT

1. Remove the lower front panel and grille assembly. Refer to Frame47
2. Undo the overheat thermostat sensor retaining screw and withdraw the sensor from the pocket.
3. Remove the control box cover.
4. Unfasten the overheat thermostat retaining nut , disconnect the electrical leads and withdraw the thermostat from the control box.
5. Fit the new thermostat and reassemble in reverse order.
6. Check that the reset button on the new thermostat is pressed in.
7. Check the operation of boiler.

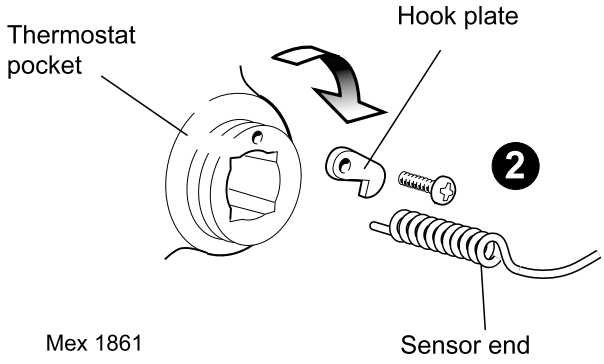

Mex 1861

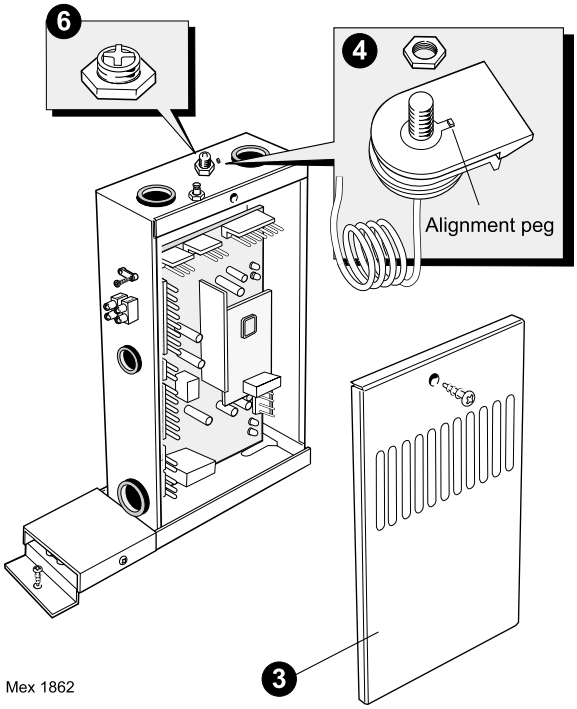

Mex 1862

Before attempting any electrical fault finding ALWAYS carry out preliminary electrical system checks, i.e. earth continuity, polarity and resistance to earth using a suitable meter.

Detailed instructions on the cleaning and adjustment or replacement of faulty components are contained in the 'Servicing' section of this publication.

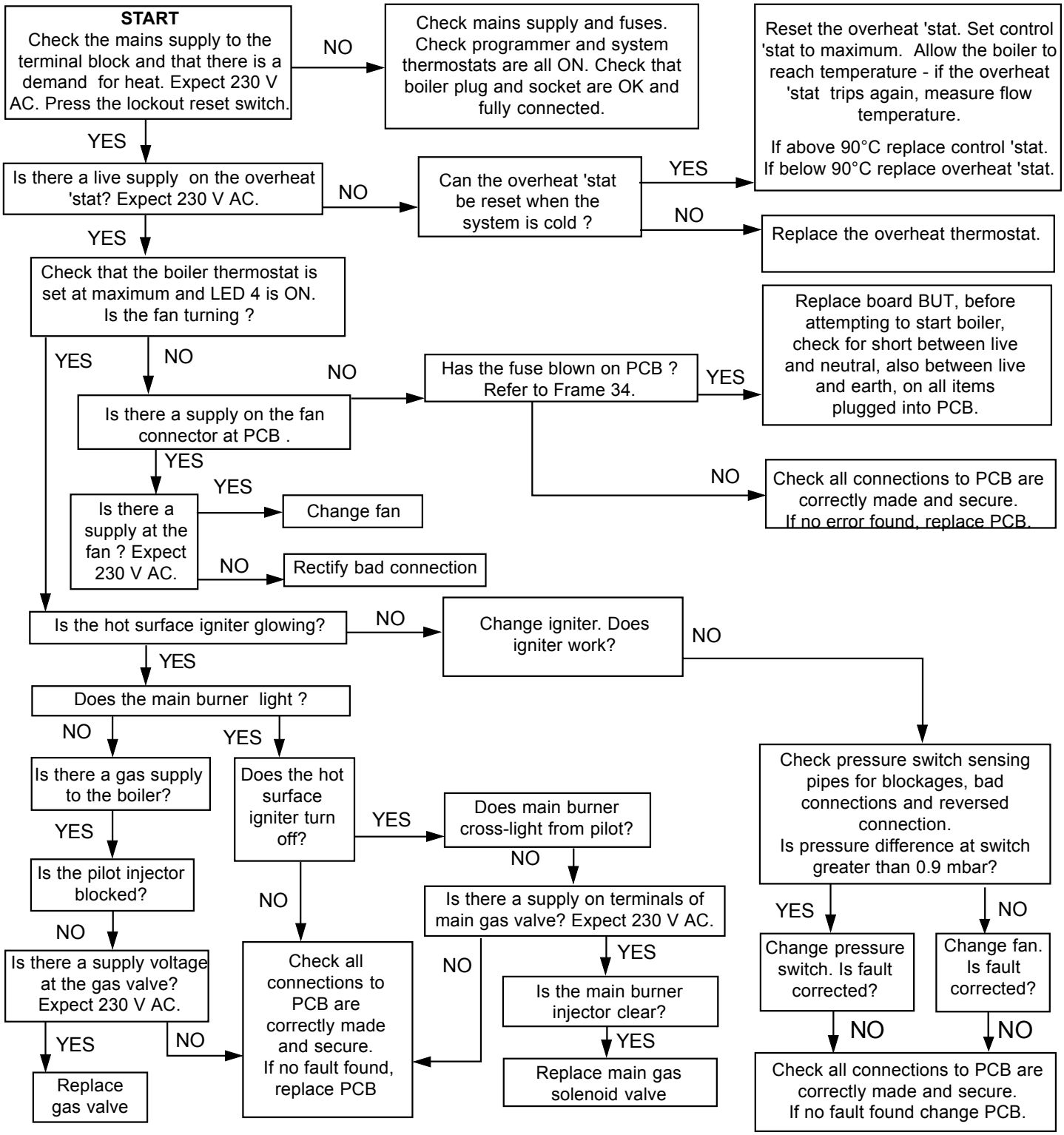

Component	LED 3*	LED 4*
Application of power.	Flash > 1/sec in sync with LED 4	Flash > 1/sec in sync with LED 3
Control 'stat open circuit or waiting for demand.	On.	On.
Fan start up.	Off.	Flash > 1/sec
Run.	Off.	On.
Pump over-run.	On	Off.
Lock-out.	Flash < 1/second.	Off.
Sensor Faults	Flash > 1/second.	Off.
Reverse polarity.	Flash > 1/sec alternately with LED 4.	Flash > 1/sec alternately with LED 3.

* Refer to Frame 36

SHORT LIST OF PARTS

The following are parts commonly required as replacement components, due to damage or expendability. Their failure or absence is likely to affect safety or performance of this appliance.

The list is extracted from the British Gas List of Parts, which contains all available spare parts.

The full list is held by British Gas distributors and merchants.

When ordering spares please quote:

1. Boiler model
2. Appliance G.C. number
3. Description
4. Quantity
5. Product no.

When replacing any part on this appliance use only spare parts that you can be assured conform to the safety and performance specification that we require. Do not use reconditioned or copy parts that have not been clearly authorised by Ideal Boilers.

Key No.	G.C. Part No.	Description		Qty.	Product No.
14	E26-381	Fan assembly	4100/4125	1	079 889
20		Main burner			
	383 598	LH AEROMATIC No. AC 19/123 216;	4100	1	012 959
	E01-372	RH AEROMATIC No. AC 19/123 299;	4100	1	150 871
	E26-392	LH AEROMATIC No. AC 19/123 300;	4125	1	153 203
	E01-374	RH AEROMATIC No. AC 19/123 298;	4125	1	150 865
21		Main injector			
	398 055	BRAY Cat. 10 - size 1400;	4100	2	003 361
	E01-490	BRAY Cat. 103 - size 1700;	4125	2	150 986
24		Gas valve assembly - VR 4605C A1076 + 'O' ring		1	170 797
26	382 519	Detection electrode - HONEYWELL		1	003 777
26A	E58 754	Hot surface igniter - PACTROL No.98036		1	152 802
27	E01-412	Detection electrode lead - 460mm		1	052 888
30	386 149	Automatic ignition PCB: PACTROL PCB No42. (with modem board PCB No.43 & gas valve/neon harness)		1	152 800
38		Pressure switch - HONEYWELL C6065F1373		1	155 412
49	E26-419	Flue baffle kit	4100	6	079 890
	E26-420		4125	4	079 891
67	308 557	Thermostat knob		1	139 296
83	E26-452	Overheat thermostat		1	153 727
89		Potentiometer with harness		1	154 443
90		Thermistor sensor harness - CROSSLANDS		1	154 439

66 SHORT PARTS

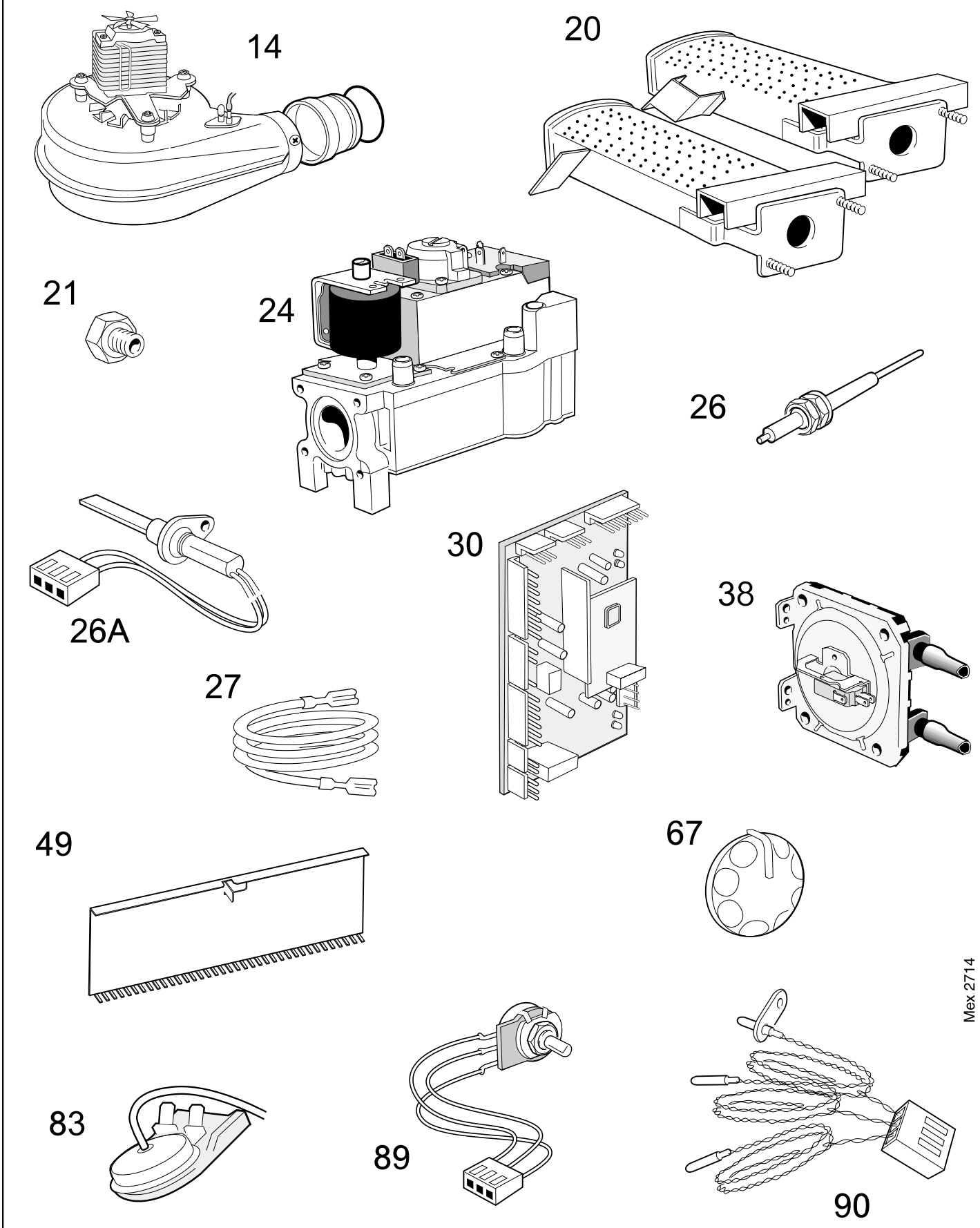

67 BOILER CONTROL PANEL - Exploded View

Legend

63. Control panel complete assembly.
67. Control potentiometer knob.
71. Control front panel (door).
72. Magnetic strip.
89. Control potentiometer.

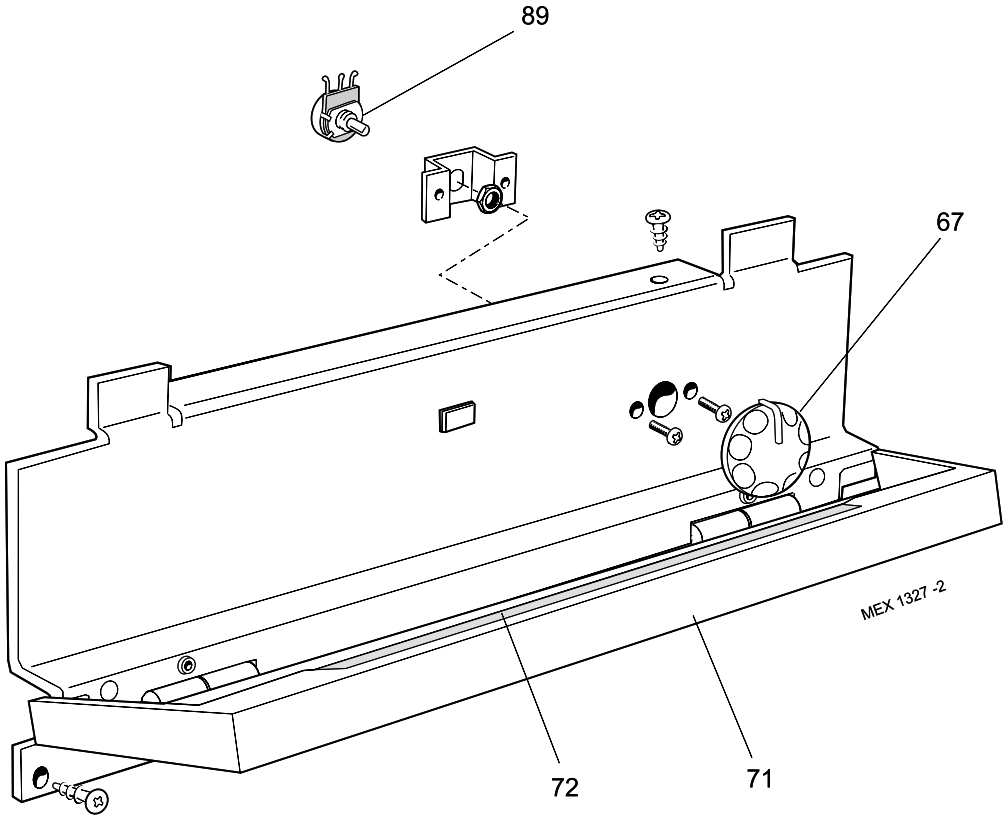

68 BOILER CASING ASSEMBLY

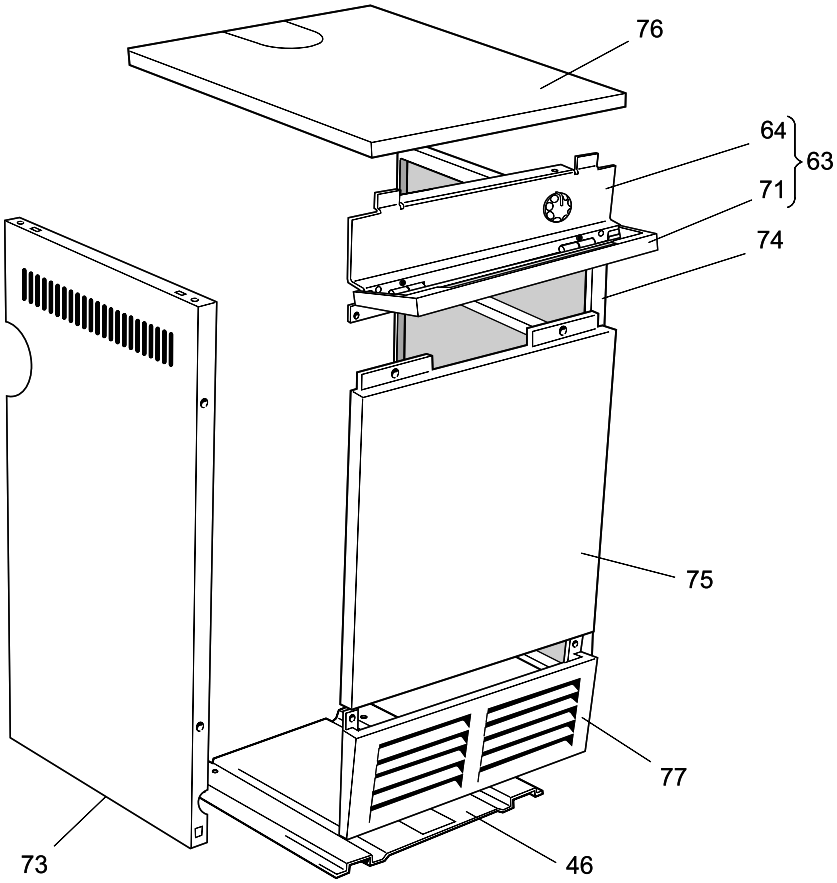

69 CONTROL BOX - Exploded View

Legend

29. Control box.

30. PCB .

34. PCB standoff.

37. Control box cover.

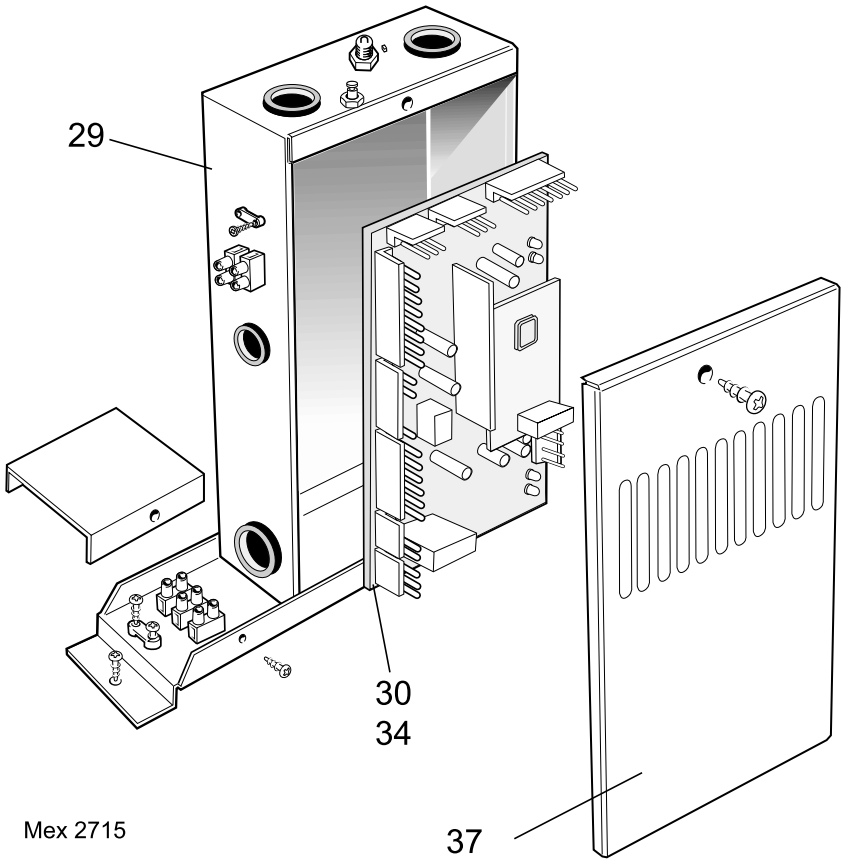

70 BURNER ASSEMBLY

Legend

16. Burner assembly complete.

18. Burner manifold.

20. Main burner.

21. Main burner injector.

24. Gas valve.

25. Gas valve 'O ring'.

26. Detection electrode.

26A. Hot surface igniter.

28. Gas cock.

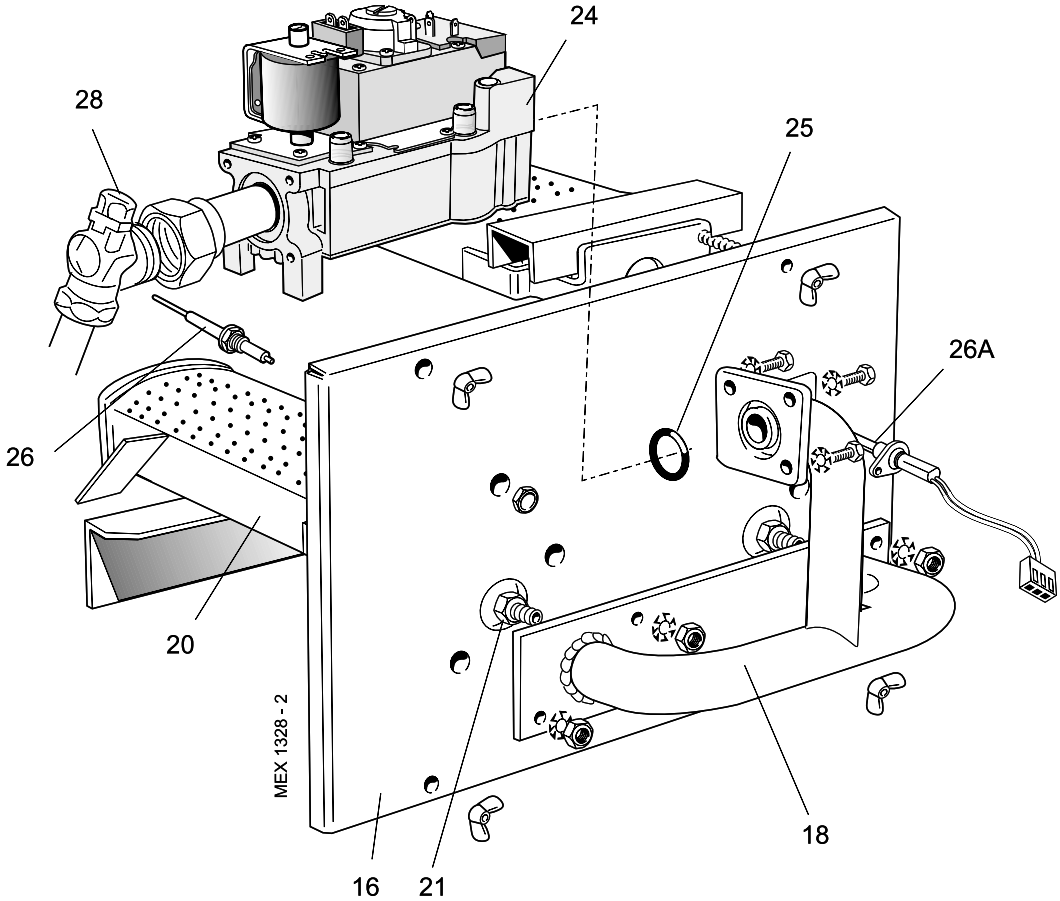

NOTES

This boiler is exclusively manufactured for British Gas by Ideal Boilers.

benchmark™

The code of practice for the installation, commissioning & servicing of central heating systems

THIS SYMBOL IS YOUR ASSURANCE OF QUALITY

These appliances are designed for use with Natural Gas only. They have been tested and conform with the provisions of BS. 6332 and BS. 5258.

CERTIFIED PRODUCT
Manufactured under a BS EN ISO 9001: 1994 Quality System accepted by BSI

British Gas Services Limited. Registered in England, No. 3141243. Registered Office: Millstream, Maidenhead Road, Windsor, Berkshire SL4 5GD. British Gas Services Ltd. has made every effort to ensure that the information contained in this leaflet is accurate. However, not all the information is within the control of British Gas Services Ltd., and it may have changed since publication. British Gas Services Ltd. does not accept any liability for changes which occur after publication. No guarantee takes away any rights you may have at law. Calls to this number may be monitored to maintain a high level of service and for training purposes.

British Gas pursues a policy of continuing improvement in the design and performance of its products. The right is therefore reserved to vary specification without notice.

July 2003 UIN 157656 A04

British Gas **Scottish Gas**

Priority Helpline 08459 500 400