THE IDEAL INSTALLATION & SERVICING MANUAL

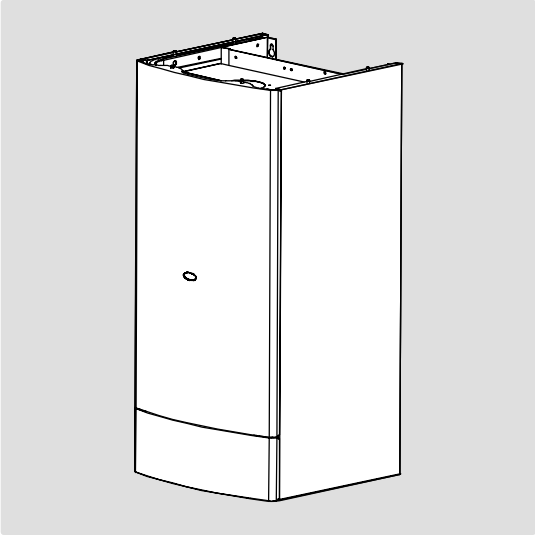

C80FF the combi boiler

C95FF the combi boiler

Wall mounted
gas fired, fanned flue
combination boiler

Installers guide to domestic central heating boilers

BOILERS Ideal

C80FF (Natural Gas only)	G.C. Appliance No. 47–348–05
C95FF (Natural Gas only)	G.C. Appliance No. 47–348–06
CE certified	P.I.N. No. 0063AQ6877
Destination Countries	GB, IE.

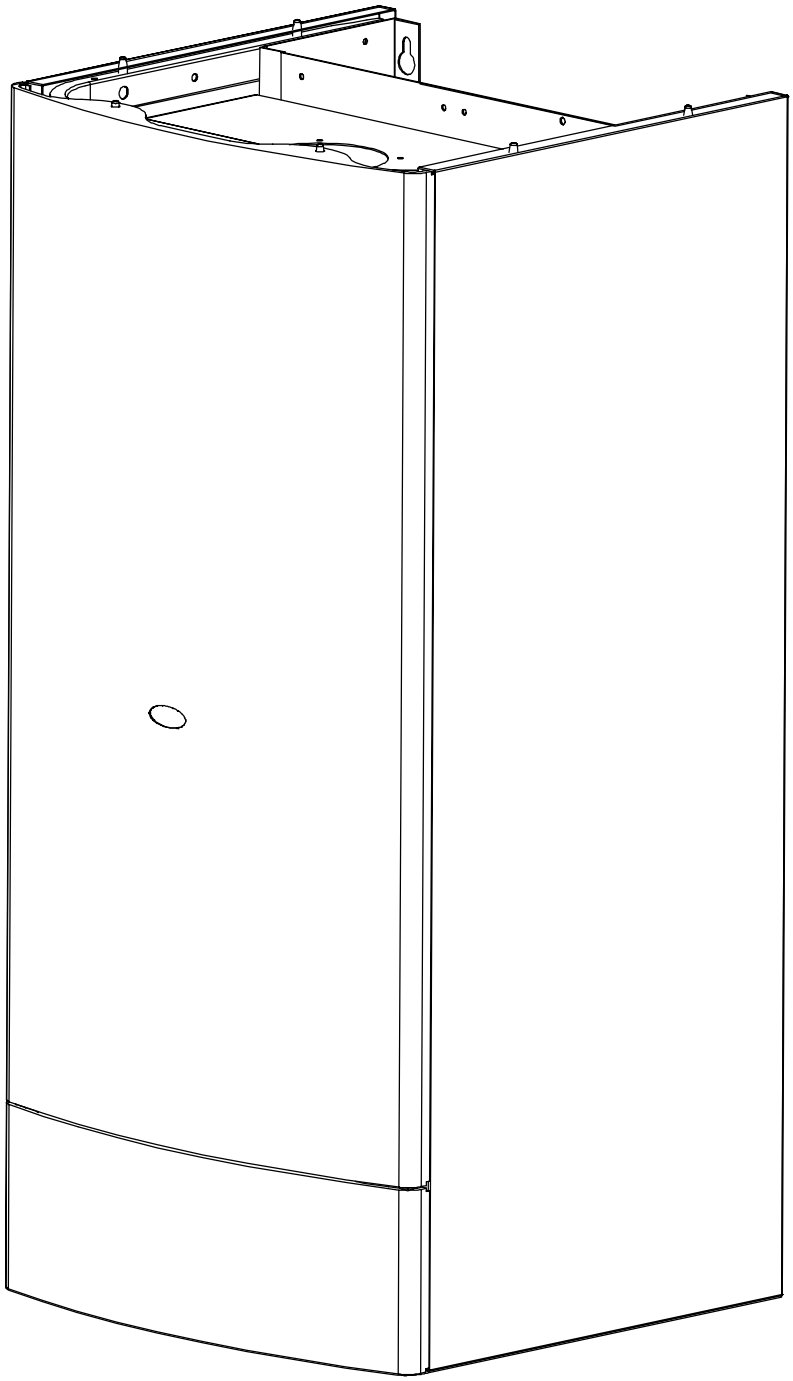

NOTE TO THE INSTALLER: leave these instructions adjacent to the gas meter

GENERAL

CONTENTS

Page

Boiler Water Circuit Diagram 5

Boiler Dimensions, Services & Clearances 7

Gas Safety (Installation And Use) Regulations, 1994, And Amendments 1996 8

Air Supply 8

Flue Installation Requirements 9

Water Circulation System 9

Water Treatment 9

Electrical Supply 10

Sealed System Requirements Central Heating 10

Domestic Hot Water Requirements 11

Boiler Assembly – Exploded View 12

Unpacking 13

Rear Flue Assembly 15

Flue Extension Duct 18

Electrical Connections 20

Pictorial Wiring 21

Functional Flow Diagram 22

Initial Lighting 24

Commissioning And Testing 26

Servicing 27

Fault finding 37

Short list of parts 40

INTRODUCTION

C80FF and ***C95FF*** are wall mounted, low water content, balanced flue combination gas boilers of type C_{12} C_{32} C_{52} intended for use with gas group I_{2H}.

Central heating (CH) output and domestic hot water (DHW) output are both fully modulating:

– between 9.16 (31 200) and 23.26 (79 300) kW (btu/h) for model ***C80FF***;

– between 11.70 (39 900) and 27.90 (95 200) kW (btu/h) for model ***C95FF***.

The boiler is suitable for connection to fully pumped, pressurised sealed water systems ONLY.

A system bypass is not required when TRV' s are fitted to **all** radiators (see Frame 5). The boiler incorporates an automatic bypass.

A circulating pump, pressure gauge, safety valve and heating expansion vessels are provided.

The CH flow temperature is controlled by an electronic thermostat. In DHW mode the boiler modulates to sustain a nominal adjustable water flow temperature of 60 °C.

The boiler casing is of white painted mild steel with a drop–down controls access door.

The boiler temperature control is located behind the control panel door.

The main heat exchanger is made of copper.

The DHW heat exchanger is stainless steel.

The system pipework must include drain cocks in appropriate places. Pipework may be taken downwards or upwards within the boiler.

OPTIONAL EXTRA KITS

Programmer Kit (digital or analogue) - fits neatly within the casing. Separate fitting instructions are included with the kit. Note. If using an alternative programmer read Frame 31 first.

Extension Ducts – up to 3m (120") *C80FF*

Extension Ducts – up to 1.85m (73") *C95FF*

90° Elbow kit

Roof Flue Kit - for vertical flue connection.

45° elbow kit

Powered Vertical Flue Kit

Vertical flue connector

OPERATION

With no call for CH the boiler fires only when DHW is drawn off. When there is a call for CH, the heating system is supplied at the selected temperature until DHW is drawn off. The output is then directed by the diverter valve to heat the secondary heat exchanger and supply a maximum draw–off of:

C80FF. 9.5 (2.1) l/min (gpm) at 35 degree rise.

C95FF 11.4 (2,52) l/min (gpm) at 35 degree rise.

The nominal DHW temperature is 60 °C, but water drawn off when the boiler has been on for central heating may be hotter than this, for a short period of time.

1 BOILER WATER CIRCUIT DIAGRAM

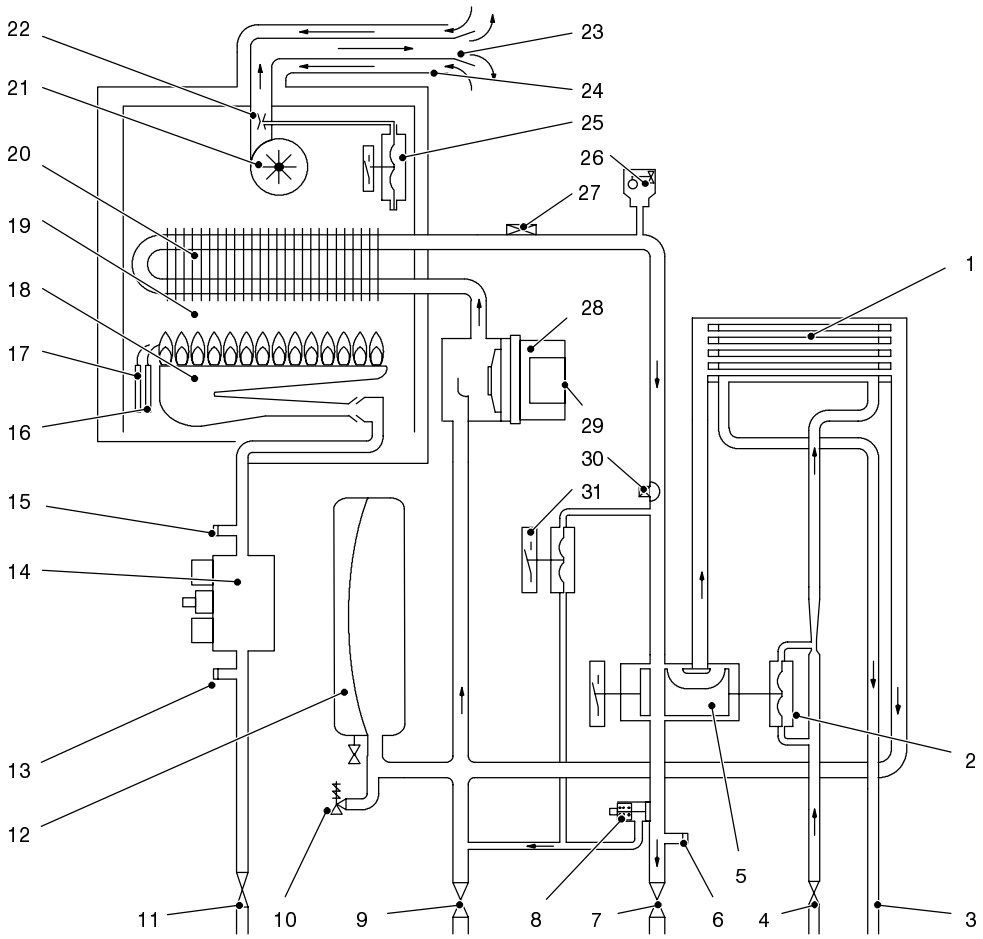

1 Domestic hot water (DHW) heat exchanger
2 Domestic hot water (DHW) flow switch
3 Domestic hot water (DHW) outlet pipe
4 Domestic cold water inlet cock
5 Three–way diverter valve
6 Main circuit drainage cock
7 Central heating flow cock
8 By–pass valve
9 Central heating (CH) return cock
10 3 bar pressure relief valve
11 Gas cock
12 Expansion vessel
13 Gas valve inlet pressure tap
14 Modulating gas valve
15 Gas valve outlet pressure tap
16 Flame detection electrode
17 Ignition electrodes
18 Burner
19 Combustion chamber
20 Primary heat exchanger
21 Fan
22 Venturi device
23 Flue outlet pipe
24 Air intake pipe
25 Air pressure switch
26 Automatic bleed valve
27 Safety thermostat
28 Pump
29 Pump vent plug
30 Water circuit temperature probe
31 CH flow switch

PERFORMANCE DATA

Table 1 – General Data

			C80FF	C95FF
Gas supply type & connection			2H – G20 – 20 mbar, 22 mm copper	
Inlet connection – Domestic Hot Water			15 mm copper	
Outlet connection – Domestic Hot Water			15 mm copper	
Flow & return connection – Central Heating			22 mm copper	
Flue terminal diameter		mm (in.)	100 (4)	
Max working pressure (sealed system)		bar (lb/in^2)	3.0 (43.6)	
Max DHW water inlet pressure		bar (lb/in^2)	10.0 (145.0)	
Min DHW water inlet pressure		bar (lb/in^2)	0.3 (4.4)	
Electrical supply & loading			230 Vac 50 Hz, 120 W max	
External fuse rating			3 A	
Internal fuse rating			T 2A	
Water content	Central heating	litre (gal.)	1.8 (0.396)	
	Domestic Hot Water	litre (gal.)	0.2 (0.044)	
Dry weight		kg (lb.)	50 (110)	
Boiler size	Height	mm (in.)	850 (33 1/2)	
	Width	mm (in.)	400 (15 3/4)	
	Depth	mm (in.)	370 (14 9/16)	
Lift weight		kg (lb.)	38 (84)	

Table 2 – Performance Data – Central Heating

		C80FF		C95FF	
		Max	Min	Max	Min
Burner pressure (HOT)	mbar (in.w.g.)	9.5 (3.8)	1.4 (0.6)	11.0 (4.4)	1.8 (0.7)
Input based on nett CV	kW (btu/h)	25.84 (88 100)	11.00 (37 500)	31.00 (105 800)	14.00 (47 800)
Input based on gross CV	kW (btu/h)	28.68 (97 800)	12.21 (41 600)	34.41 (117 400)	15.54 (53 000)
Output	kW (btu/h)	23.26 (79 300)	9.16 (31 200)	27.90 (95 200)	11.70 (39 900)
Gas consumption (Hot)	l/s (ft^3/h)	0.741 (94.2)	0.318 (40.3)	0.811 (113.1)	0.40 (51.1)
Seasonal efficiency*	(SEDBUK) %	78.45		78.49	

*The value is used in the UK Government's Standard Assessment Procedure (SAP) for energy rating of dwellings.
The test data from which it has been calculated have been certified by BG plc 0087.

Table 3 – Performance Data – Domestic Hot Water

		C80FF	C95FF
		Maximum	
Burner pressure (HOT)	mbar (in.w.g.)	9.5 (3.8)	11.0 (4.4)
Input based on nett CV	kW (btu/h)	25.84 (88 100)	31.00 (105 800)
Input based on gross CV	kW (btu/h)	28.68 (97 800)	34.41 (117 400)
Output	kW (btu/h)	23.26 (79 300)	27.90 (95 200)
Gas consumption (Hot)	l/s (ft^3/h)	0.741 (94.2)	0.811 (113.1)
Flow 35 °C temp. rise	l/m (gpm)	9.5 (2.1)	11.4 (2,52)
Domestic hot water specific rate	l/m (gpm)	11.1 (2.44)	13.3 (2.93)

Note: the gas consumption is calculated using a calorific value of 38.7 MJ/m^3 (1038 Btu/ft^3) gross or 34.9 MJ/m^3 (935 Btu/ft^3) nett.

To obtain the gas consumption at different calorific value:–

a. ***FOR L/S*** *– divide the gross heat input (kW) by the gross C.V. of the gas (MJ/m^3)*

b. ***FOR FT^3/H*** *– divide the gross heat input (Btu/h) by the gross C.V. of the gas (Btu/ft^3)*

Key to Symbols:

IE = Ireland,
GB = United Kingdom (Countries of destination)
PMS = Maximum operating pressure of water
C_{12} C_{32} C_{52} = a room sealed appliance designed for connection via concentric ducts to a horizontal or vertical terminal. I_{2H} = appliance designed for use on 2nd family gas group H

CAUTION. To avoid the possibility of injury during the installation, servicing or cleaning of this appliance care should be taken handling edges of sheet steel components.

2 BOILER DIMENSIONS, SERVICES & CLEARANCES

All dimensions in mm (in.)

Note. *For the* ***C80FF*** *and* ***C95FF*** *central heating circuit 22 mm (3/4") pipes may be used.*

The following minimum clearances must be maintained for operation and servicing. Additional space will be required for installation, depending upon site conditions.

Side and Rear Flue

a. Provided that the flue hole is cut accurately, e.g. with a core drill, the flue can be installed from inside the building where wall thickness do not exceed 600 mm (24").

Where the space into which the boiler is going to be installed is less than the length of flue required the flue must be fitted from the outside.

installation from inside ONLY

b. If a core boring tool is to be used inside the building the space in which the boiler is to be installed must be at least wide enough to accommodate the tool.

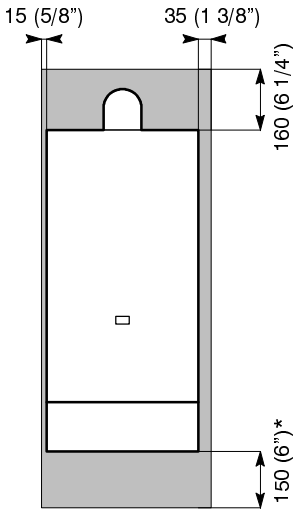

Front clearance

The minimum front clearance when built in to a cupboard is 5mm (l/4") from the cupboard door but 450mm (17 3/4") overall clearance is still required, with the cupboard door open, to allow for servicing. See Table 4.

Table 4

Clearances	
LH side	15 mm (1/2")
RH side	35 mm (1 3/8")
Top	160 mm (6 1/4")
Front	450 mm (17 3/4")
Bottom	150 mm (6")

***Bottom clearance**

Bottom clearance after installation can be reduced to 10 mm in an adequately ventilated enclosed cupboard. However, 150 mm must be available for servicing.

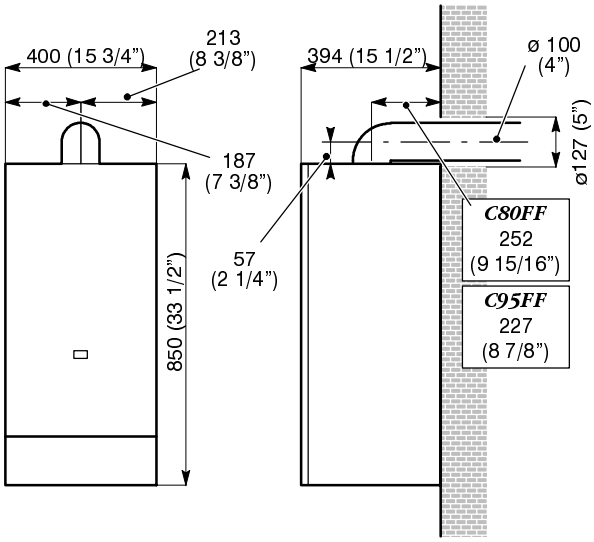

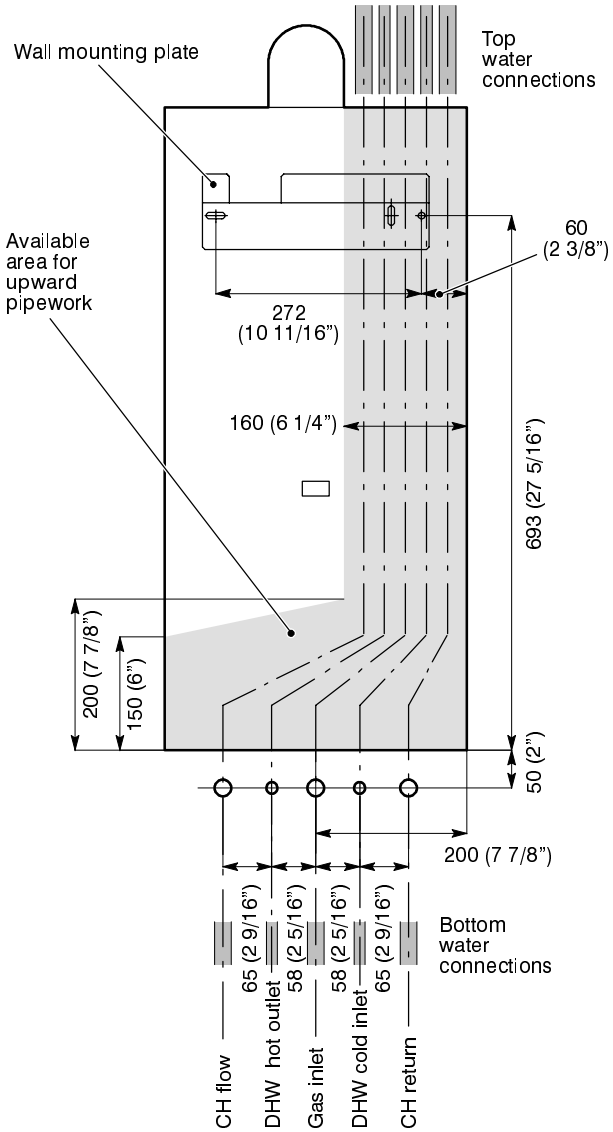

Pipe size	O.D. mm
CH flow	22
CH return	22
Gas inlet	22
DHW cold inlet	15
DHW hot outlet	15

SAFETY

Gas Safety (Installation and Use) Regulations, 1994, and amendments 1996 or rules in force

It is law that all gas appliances are installed and serviced by a CORGI registered installer (identified by ✿) in accordance with the above regulations. Failure to install appliances correctly could lead to prosecution. It is in your own interest, and that of safety, to ensure the law is complied with.

The installation of the boiler MUST also be in accordance with the latest I.E.E (BS.7671) Wiring Regulations, local building regulations, bye–laws of the local water authority, the building regulations and the Building Standards (Scotland) and any relevant requirements of the local authority.

Detailed recommendations are contained in the following British Standard Codes of Practice:

BS 5440:1	Flues (for gas appliances of rated input not exceeding 60 kW).
BS 5440:2	Ventilation (for gas appliances of rated input not exceeding 60 kW).
BS. 5449	Forced circulation hot water systems.
BS. 5546	Installation of gas hot water supplies for domestic purposes (2nd Family Gases)
BS 6700	Design, installation testing and maintenance of services supplying hot water for domestic use.
BS. 6798	Installation of gas fired hot water boilers of rated input not exceeding 60 kW.
BS. 6891	Low pressure installation pipes.

Health & Safety Document No. 635.

The Electricity at Work Regulations, 1989.

The manufacturers notes must NOT be taken, in any way, as overriding statutory obligations.

IMPORTANT These appliances are CE certificated for safety and performance. It is, therefore, important that no external control devices, e.g. flue dampers, economisers etc., are directly connected to these appliances unless covered by these Installation and Servicing Instructions or as otherwise recommended by **Caradon Plumbing Ltd.** in writing. If in doubt please enquire.

Any direct connection of a control device not approved by **Caradon Plumbing Ltd.** could invalidate the certification and the normal appliance warranty. It could also infringe the Gas Safety Regulations and the above regulations.

LOCATION OF BOILER AND FLUE OUTLET

The boiler must be installed on a flat and vertical wall, capable of adequately supporting the weight of the boiler and any ancillary equipment.

The boiler may be fitted on a combustible wall and insulation between the wall and the boiler is not necessary, unless required by the local authority.

The boiler must not be fitted outside.

Timber Framed Buildings

If the boiler is to be fitted in a timber framed building it should be fitted in accordance with the Institute of Gas Engineers document IGE/UP/7, 1998.

Bathroom Installations

The boiler may be installed in any room or internal space, although particular attention is drawn to the requirements of the current I.E.E. (BS.7671) Wiring Regulations and, in Scotland, the electrical provisions of the building regulations applicable in Scotland with respect to the installation of the boiler in a room or internal space containing a bath or shower.

Where a room sealed appliance is installed in a room containing a bath or shower then the appliance and any electrical switch or appliance control utilising mains electricity should be so situated that it cannot be touched by a person using the bath or shower.

Note. It is not permissible to install a mains socket in a bathroom.

Where installation will be in an unusual location, special procedures may be necessary and BS 6798 gives detailed guidance on this aspect.

Compartment Installations

A compartment or cupboard, including airing cupboards, must conform to the following:

- BS. 6798.
- For the minimum clearances required for safety and subsequent service see the wall mounting template and Frame 2. In addition, sufficient space will be required to allow lifting access to the wall mounting plate.
- Ventilation of the compartment ,e.g. permanent high and low level air vents, must be provided in accord with the current issue of BS 5440, Part 2. See Table 5 and 'Air Supply' .

Table 5 – Minimum air vent free area for compartments/cupboards (high and low levels)

Vent level	Air from room or internal space cm^2 (in^2)	Air direct from outside cm^2 (in^2)	Model
High/Low	266 (41)	133 (21)	***C80FF***
	282 (44)	141 (22)	***C95FF***

AIR SUPPLY

Detailed recommendations for air supply are given in BS.5440:2. The following notes are for general guidance:

1. If the boiler is to be installed in a cupboard or compartment, permanent air vents are required (for cooling purposes) in the cupboard/compartment at both high and low levels. The air vents must either communicate with room/internal space or be direct to outside air. The minimum effective areas of the permanent air vents required in the cupboard/compartment are specified in Table 5 and are related to maximum rated heat input.
2. Both air vents must communicate with the same room or internal space or must be on the same wall to outside air.
3. In siting the air vents, care must be taken to avoid the freezing of pipework.
4. If the boiler is not installed in a cupboard or compartment no air vent is necessary.

GAS SUPPLY

The local gas supplier should be consulted, at the installation planning stage, in order to establish the availability of an adequate supply of gas. An existing service pipe must NOT be used without prior consultation with the local gas supplier.

A gas meter can only be connected by the local gas supplier or by a registered CORGI engineer.

Check that the appliance is suitable for the proposed gas supply. A working gas pressure of 20 mbar MUST be available at the boiler inlet.

IMPORTANT Installation pipes MUST be fitted in accordance with BS. 6891. Pipework from the meter to ***C80FF/ C95FF***

boilers MUST be of an adequate size, i.e. not less than 22 mm O.D. copper or 3/4" BSP iron.

The complete installation MUST be tested for gas soundness and purged as described in the above code.

FLUE INSTALLATION REQUIREMENTS

The flue must be installed in accordance with the recommendations of BS. 5440: Part 1.

The following notes are intended for general guidance:

1 The boiler MUST be installed so that the terminal is exposed to external air.

2 It is important that the position of the terminal allows the free passage of air across it at all times.

3 Minimum acceptable spacing from the terminal to obstructions and ventilation openings are specified in Table 6.

Note (Position 2–6): due to the terminal design, installation is possible with clearances less than those specified in BS 5440, part 1.

Table 6 – Balanced flue terminal position

Terminal position	Minimum spacing
1 Directly below an openable window, air vent or other ventilation opening	300 mm (12")
2 Below guttering, drain pipes or soil pipes	25 mm (1")
3 Below eaves	25 mm (1")
4 Below balconies or a car port roof	25 mm (1")
5 From vertical drain pipes or soil pipes	25 mm (1")
6 From internal or external corners	25 mm (1")
7 Above adjacent ground, roof or balcony level	300 mm (12")
8 From a surface facing the terminal	600 mm (24")
9 From a terminal facing a terminal	1200 mm (48")
10 From an opening in a car port (e.g. door or window) into dwelling	1200 mm (48")
11 Vertically from a terminal on the same wall	1500 mm (60")
12 Horizontally from a terminal on the wall	300 mm (12")

4 Where the lowest part of the terminal is fitted less than 2m (6'6") above a balcony, above ground or above a flat roof to which people have access then the terminal MUST be protected by a purpose designed guard. The minimum spacing in Table 6, Nos. 2, 3, 4, 5 and 6 would be 75mm, in order to allow a terminal guard to be fitted.

Terminals guards are available from boiler suppliers – ask for Tower Flue Guard, Model K1. In case of difficulty seek advice from:

Tower Flue Components Ltd.,Vale Rise, Tonbridge,
Kent TN9 1TB Telephone No. 01732 351 555

Ensure that the guard is fitted centrally.

5 Where the terminal is fitted within 850mm (34") of a plastic or painted gutter or 450mm (18") of painted eaves then an aluminium shield at least 750mm (30") long should be fitted to the underside of the gutter or painted surface fitted centrally above the flue.

6 The air inlet/products outlet duct and the terminal of the boiler MUST NOT be closer than 25mm (1") to combustible material. Detailed recommendations on the protection of combustible material are given in BS. 5440: 1990.

7 Where it is essential that the terminal wall plate is fitted, i.e. wall thicknesses over 610mm (24") or with an inaccurately cut hole, the minimum spacing in Table 6, Nos. 2, 3, 4, 5 and 6 would be 60mm (2.4") in order to allow the terminal wall plate to be fitted.

IMPORTANT It is the responsibility of the installer to ensure, in practice, that products of combustion discharging from the terminal cannot re–enter the building or any other adjacent building through ventilators, windows, doors, other sources of natural air infiltration, or forced ventilation / air conditioning.

If this should occur the appliance MUST be turned OFF, labelled as 'unsafe' until corrective action can be taken.

FLUE LENGTHS

The flue assembly can be adapted to accommodate flue lengths up to 3 metres. Refer to Frame 10.

WATER CIRCULATION SYSTEM

The boilers are designed for connection to pressurised, fully pumped, sealed water central heating systems ONLY. The domestic hot water (DHW) calorifier is incorporated within the boiler and only requires connection to the mains water supply.

IMPORTANT Ensure that the mains water supply pressure is adequate to provide the required DHW flow rate. Refer to Table 1 on page 6.

The central heating system should be in accordance with BS. 6798 and, in addition, for smallbore and microbore systems BS. 5449.

The domestic hot water system should be in accordance with BS. 5546 and BS. 6700.

Copper tubing to BS 2871:1 is recommended for water carrying pipework and MUST be used for pipework carrying potable water.

Any soldered joints on potable water pipework MUST NOT be made with solder containing lead.

Ancillary pipework not forming part of the useful heating surface should be lagged to prevent heat loss and any possible freezing – particularly where pipes run through roof spaces or ventilated underfloor spaces.

Draining taps should be at least 1/2" BSP nominal size and be in accordance with BS 2879.

WATER TREATMENT

Antifreeze fluid, corrosion and scale inhibitor fluids suitable for use with boilers having copper heat exchangers may be used in the central heating system.

For further information contact either:

Fernox
Fry Technology UK
Tandem House
Marlow Way
Beddington Farm Road
Croydon
CR0 4XS
Tel 0870 601 5000

Betz Dearborn Ltd
Foundry Lane
Widnes
Cheshire
WA8 8UD
Tel 0151 424 5351

3 ELECTRICAL SUPPLY

Warning. This appliance must be efficiently earthed.

Wiring external to the appliance MUST be in accordance with the current I.E.E. (BS.7671) Wiring Regulations and any local regulations which apply.

The point of connection to the mains should be readily accessible and adjacent to the boiler, except for bathroom installations where the point of connection to the mains MUST be situated outside of the bathroom.

Note. *Where a room sealed appliance is installed in a room containing a bath or shower then the appliance and any electrical switch or appliance control utilising mains electricity should be so situated that it cannot be touched by a person using the bath or shower.*

4 SEALED SYSTEM REQUIREMENTS Central Heating

Note. C80FF / C95FF combination boilers are suitable for fully pumped pressurised sealed systems only.

REQUIREMENTS

1 General

Any method of filling, refilling, topping up or flushing sealed primary hot water circuits from the mains via a temporary hose connection is only allowed if it complies with Water Bye – law 14, which states:

”(1) No closed circuit shall be connected to a supply pipe.

(2) Paragraph (1) shall not apply to a temporary connection provided that:

a. The connection is made through a double check valve assembly or some other no less effective device which is permanently connected to that circuit;

and

b. The temporary connection is removed after use. ”

The method described in this instruction complies with that Byelaw.

2 BS. Requirements

The installation must comply with the requirements of BS. 6891:1988 and BS. 5449.

3 Flow Temperature

The installation should be designed to work with flow temperatures of up to 90 °C.

4 Working Pressure

All components of the system must be suitable for a working pressure of 3 bar (45 lb/in^2) and temperature of 110 °C. Extra care should be taken in making all connections so that the risk of leakage is minimised.

The following components are incorporated within the appliance:

a. Circulating pump.

b. Safety valve; with a non – adjustable pre – set lift pressure of 3 bar (45lb/in^2).

c. Pressure gauge; covering a range of 0 – 4 bar.

d. 8 litre expansion vessel; with an initial charge pressure of 0.7 bar (10.5 lb/in^2).

For further details refer to BS.5449:1 and the British Gas Corporation publication ’Specifications for Domestic Central Heating and Hot Water’.

5 Filling the system

Fill the system through a temporary hose connection from a draw – off tap supplied from a service pipe under mains pressure. Where the mains pressure is excessive a pressure reducing valve shall be used to facilitate filling.

The following fittings shall form a permanent part of the filling system:

A double non – return valve with at least 1 isolation valve, which is used as a temporary connection to fill the system from the mains, after which it should be disconnected and left with the installation.

Proceed with the following:

- Thoroughly flush out the whole of the system with cold water before fitting the boiler.
- Fill and vent the system until the pressure gauge registers 1.5 bar (22 lb/in^2). Examine for leaks.
- Release water from the system until a pressure of 1 bar (15 lb/in^2) is reached.
  To avoid getting debris on the valve seat, do not use the safety valve to do this.
- Light the boiler and heat the system to the maximum working temperature. Examine for leaks.
- Turn off the boiler and drain the system while still hot.
- Refill and vent the system.
- Re – pressurise the system to the desired charge pressure (see Table 7).

Table 7

System charge pressure (bar)	0.5	0.7	1.0
Safety valve setting	3.0		
Vessel pre – charge pressure (bar)	0.5	0.7	1.0
System volume (litres)	Volume of expansion vessel in addition to 8 litre unit fitted to boiler		
75	None	None	None
100	None	None	0.8
125	0.4	1.3	3.0
150	2.1	3.1	5.1
175	3.8	4.1	7.3
200	5.4	6.8	9.5
225	7.1	8.7	11.7
250	8.8	10.5	13.9
275	10.6	12.4	16.1
300	12.2	14.2	18.4
Multiply this factor by system volume and deduct 8 litres to obtain size of additional vessel for other system volumes.	0.067	0.074	0.088

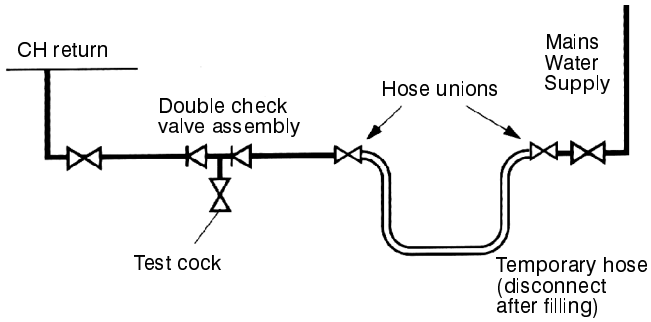

System filling and make–up

6 Size of expansion vessel

For the system water expansion to be contained by the 8 litre expansion vessel fitted to the boiler the cold system volume must not exceed:

119 litres when pressurised to 0.5 bar (cold)

107 litres when pressurised to 0.7 bar (cold)

91 litres when pressurised to 1.0 bar (cold)

If the pressure exceeds 2.65 bar when the boiler is up to temperature with all radiators in use then an additional expansion vessel MUST be installed on the return pipework.

For expansion volumes see Table 7.

Guidance on vessel sizing is given in BS 7074:1 and BS 5449

5 SEALED SYSTEM REQUIREMENTS central heating (continued)

7 Thermostatic radiator valves.

Caradon Plumbing Ltd. support the recommendations made by leading manufacturers of domestic heating controls that heating systems utilising full thermostatic radiator valve control of temperature in individual rooms should also be fitted with a room thermostat controlling the temperature in a space served by radiators not fitted with such a valve as stated in BS5449. Such an arrangement will provide for a more efficient control of the environment and will also avoid the continuous running of the circulation pump during programmed heating ON periods, saving electrical energy.

It is therefore strongly recommended that, when thermostatic radiator valves are used, the space heating temperature control over a living/dining area or a hallway, having a heat requirement of at least 10% of the boiler output, is achieved using a room thermostat whilst other rooms are individually controlled by thermostatic radiator valves as stated in BS5449.

For further information refer to “Good Practise Guide 143” a pubblication of the energy efficiency office, available from the building research establishment Garston Watford WD2 7JR tel: 01923 664258.

The boiler is fitted with an automatic internal bypass. No further system bypass is required.

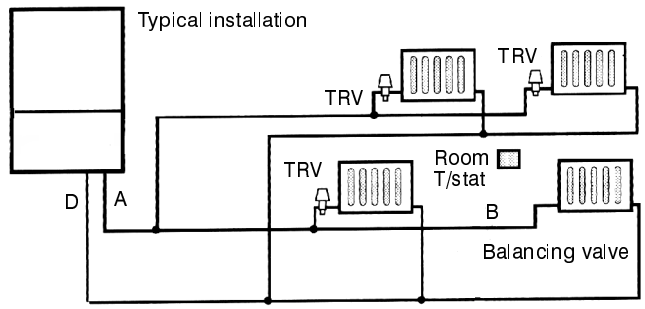

8 Hydraulic Loss

Both the ***C80FF*** and the ***C95FF*** operate at a temperature differential of 20 °C (36 °F)

Remaining pump capacity

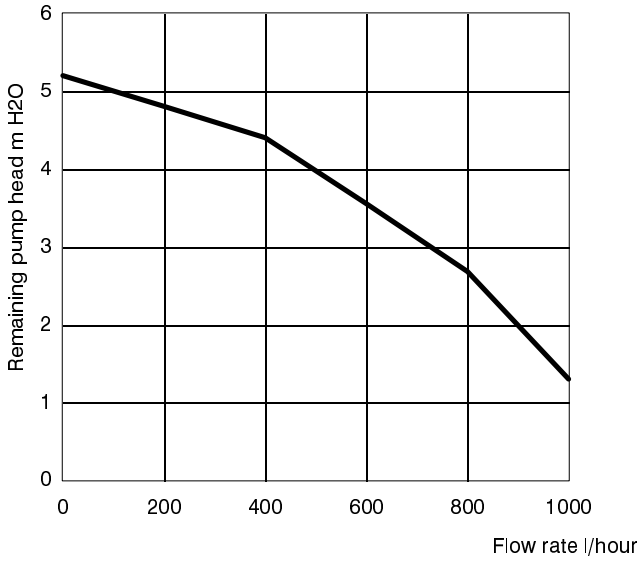

If necessary, it is possible to replace the current pump with a higher capacity model (supplied separately)

9 Draining the system

Draining taps MUST be located in accessible positions to permit the draining of the whole central heating system, including the central heating side of the boiler. The taps should be at least 1/2” BSP nominal size and be in accordance with BS 2879. The boiler flow and return service valves (fitted to the piping frame) have drain plugs to drain the BOILER ONLY, in the event of the system drain tap being unable to do so.

6 DOMESTIC HOT WATER REQUIREMENTS

1 The domestic hot water service must be in accordance with BS 5546 and BS 6700.

2 For the minimum and maximum working pressures of the ***C80FF*** and ***C95FF*** domestic hot water circuit refer to Table 1, page 6.

3 The cold water supply pipe should be flushed before fitting the boiler.

4 The boilers are suitable for connection to most types of washing machine and dishwashing appliances.

5 When connecting to suitable showers, i.e. those designed for modulating domestic hot water, ensure that:

a. The cold inlet to the boiler is fitted with an approved anti–vacuum or syphon non–return valve.

b. Hot and cold supplies are of equal pressure.

6 Hard water areas
In areas where the water is ’hard’ it is recommended that a proprietary scale–reducing device is fitted into the boiler cold supply, within the requirements of the local water company.

7 BOILER ASSEMBLY – Exploded View

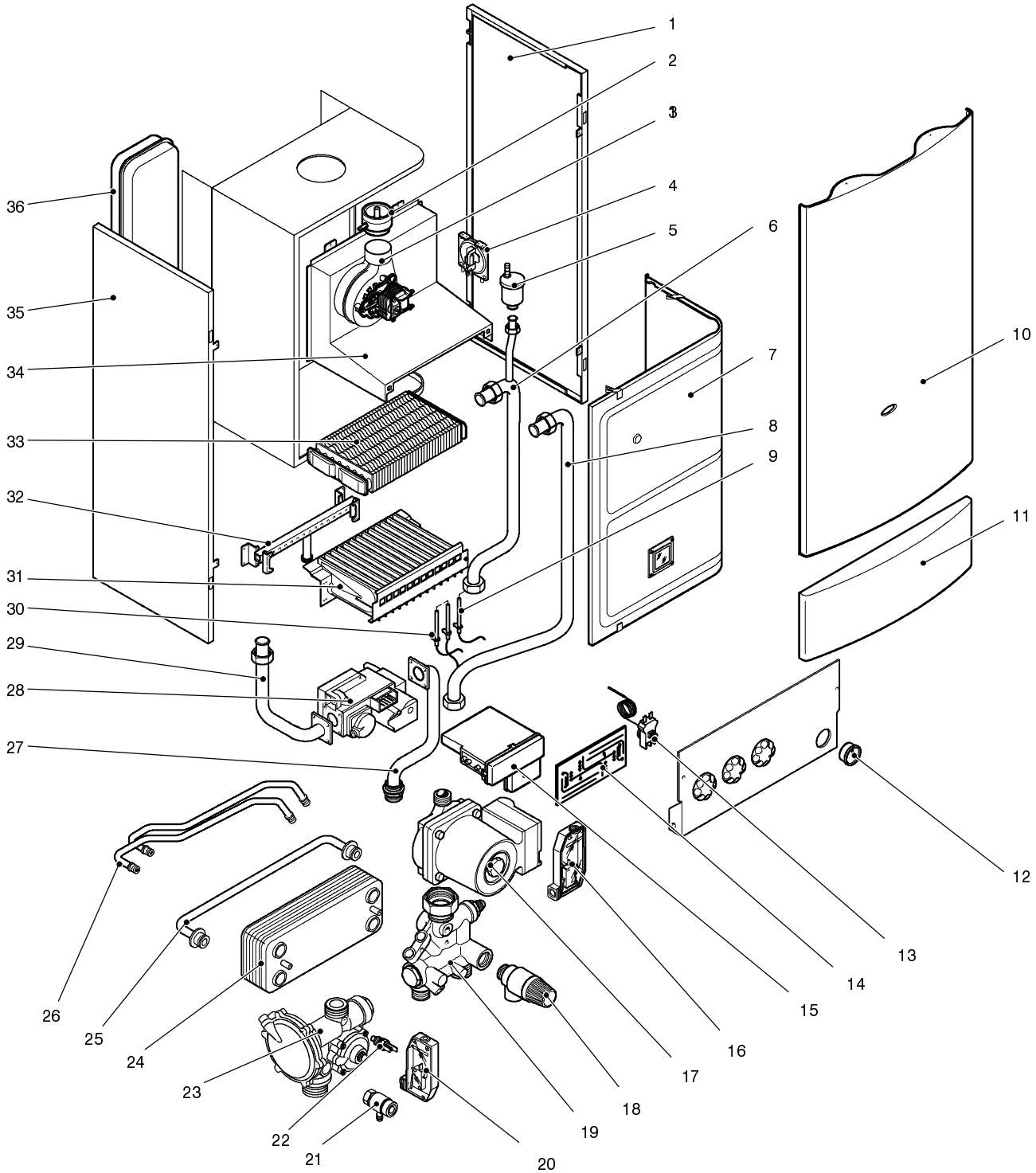

1 Right hand panel
2 Venturi
3 Fan
4 Air pressure switch
5 Auto air vent
6 Heat exchanger flow pipe
7 Inner case cover
8 Heat exchanger return pipe
9 Flame detection electrode
10 Boiler front panel
11 Control panel door
12 CH circuit pressure gauge
13 Overheat thermostat
14 Main control pcb
15 Ignition pcb
16 DHW flow switch
17 Pump
18 3 bar pressure relief valve
19 Return manifold
20 CH flow switch
21 Main circuit drainage cock
22 Thermistor
23 3 way diverter valve
24 DHW heat exchanger
25 Bypass pipe
26 DHW pressure switch pipes
27 Gas valve Inlet pipe
28 Gas valve
29 Gas valve outlet pipe
30 Ignition electrodes
31 Burner
32 Injector manifold
33 Primary heat exchanger
34 Flue hood
35 Left hand panel
36 Expansion vessel

8 UNPACKING

The boiler is supplied fully assembled in one pack A, together with a standard flue assembly for lengths up to 600 mm, rear or side flue outlet, in pack B.

Unpack and check the contents.

Pack A contents

- The boiler.
- These installation & Servicing instructions.
- The User's Instructions.
- Wall mounting template
- Wall mounting plate
- Flue turret
- Hardware pack
- Internal wall finishing gasket

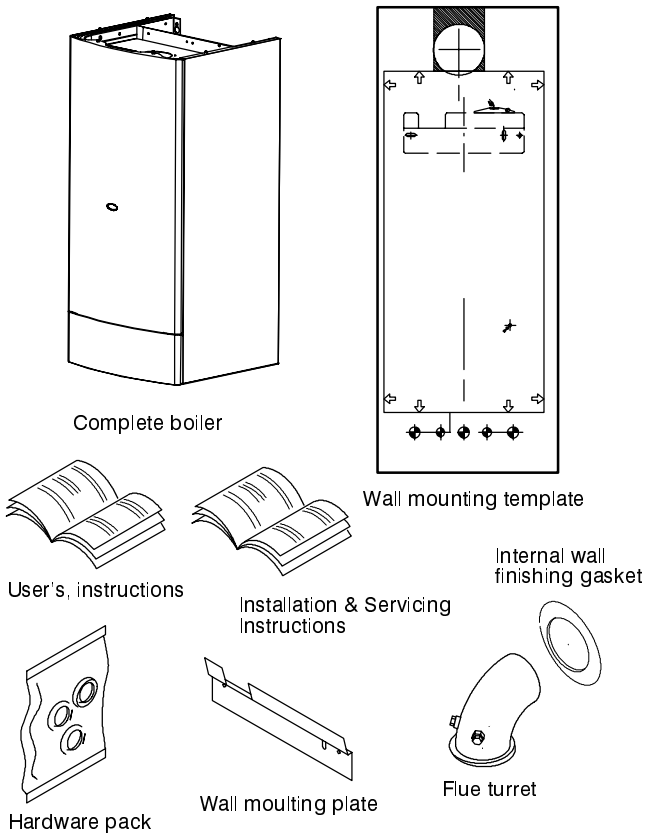

Optional extras, if ordered, are available in separate boxes.

- Programmer kits, digital or analogue
- Roof flue kit
- Extension duct kit D
- 90° Elbow kit
- 45° Elbow kit
- Powered vertical flue kit
- Vertical flue connector

Hardware pack contents

- 22 mm CH connection pipe – 2 off.
- 22 mm Gas supply connection pipe – 1 off.
- 15 mm DHW cold inlet connection pipe – 1 off.
- 15 mm DHW hot outlet connection pipe – 1 off.
- 1/2" connection nut – 2 off.
- 1/2" sealing washer – 3 off.
- 3/4" sealing washer – 6 off.
- 3/4" Gas supply isolating valve – 1 off.
- 3/4" CH circuit isolating valve – 2 off.
- 1/2" DHW cold inlet isolating valve – 1 off.
- 15 mm nut – 1 off.
- 15 mm olive – 1 off.

Pack B contents

- Terminal grille assembly
- No. 8x8 self tapping screw – 3 off.
- Flue support cutting aid – 1 off.
- Terminal wall plate – 1 off.
- Wood screws N° 10x2" 4 off
- Wall plugs 4 off

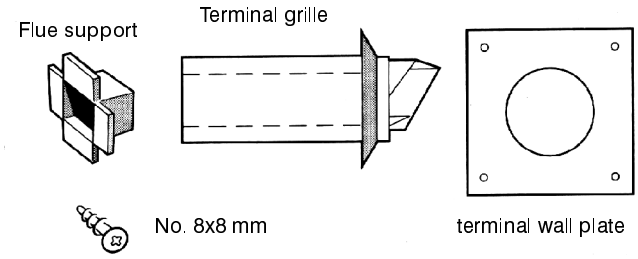

9 PACKAGING

To unpack the boiler refer to the instructions on carton end flap.

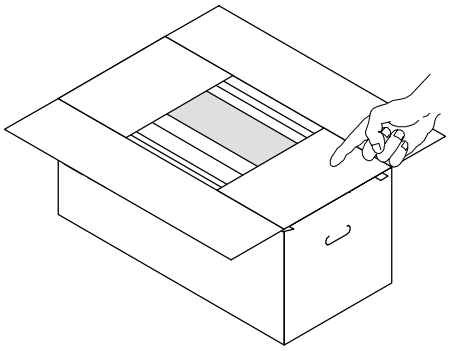

10 DETERMINING THE FLUE LENGTH AND FLUE PACKS REQUIRED

The maximum total equivalent horizontal flue length is:
3 m for model *C80FF*
1.85 m for model *C95FF*.

For the number of Extension Ducts required see the Flue kit requirements table below. When using elbow kits, each 90° elbow is equivalent to 1 metre flue length and each 45° elbow is equivalent to 0.7 metre flue length.

Right hand side flue mounting

cut flue to length:

A+144=D

A+5 5/8” =D

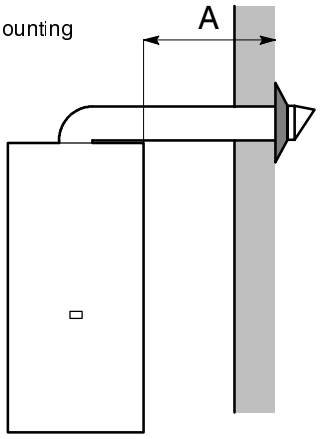

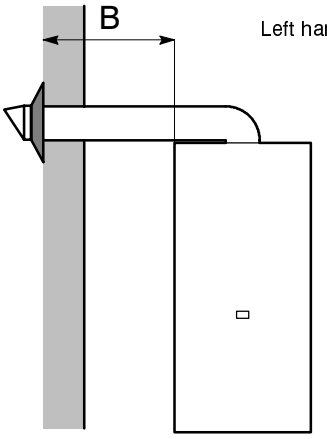

Left hand side flue mounting

cut flue to length:

B+120=D

B+4 11/16”=D

Rear flue mounting

cut flue to length:

for *C80FF*

C+185=D

C+7 1/4”=D

for *C95FF*

C+160=D

C+ 6 3/8” =D

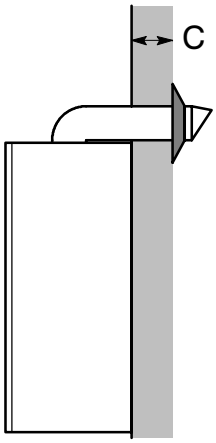

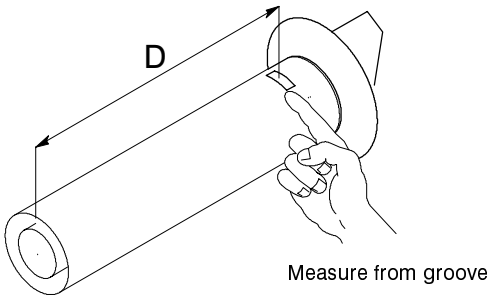

Having cut length D

mark around the end of the air duct 10 mm from the cut end then cut the air duct only to be 10 mm shorter than the flue duct to allow for engagement.

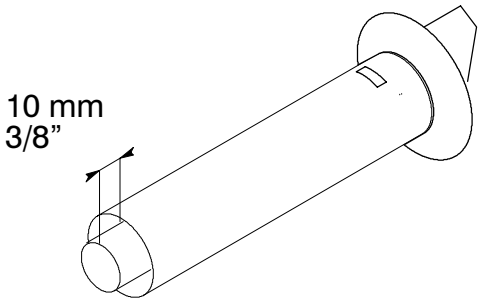

Flue kit requirements

Total length of flue	Extra packs required
* 600 mm (23 5/8”)	None
* 1550 mm (61”)	One pack D
* 2500 (98 7/16”)	Two pack D
* 3000 (118 1/8”)	Three pack D

Pack B – supplied as standard

Pack D – optional extra kit, to extend the flue

*** N.B.**

If the measured flue length is only just above these sizes, it may be necessary to shorten the standard flue before adding extension duct(s), in order to prevent interference between flue duct connections and the boiler flue elbow.

11 REAR FLUE ASSEMBLY

Legend

1 Terminal
2 Weather seal
3 Inner wall finishing gasket
4 Duct assembly
5 Duct – elbow sealing gasket
6 Flue duct gasket
7 No. 8x8 self tapping screw
8 Flue turret
9 Elbow – boiler gasket
10 4.8x13 self tapping screw

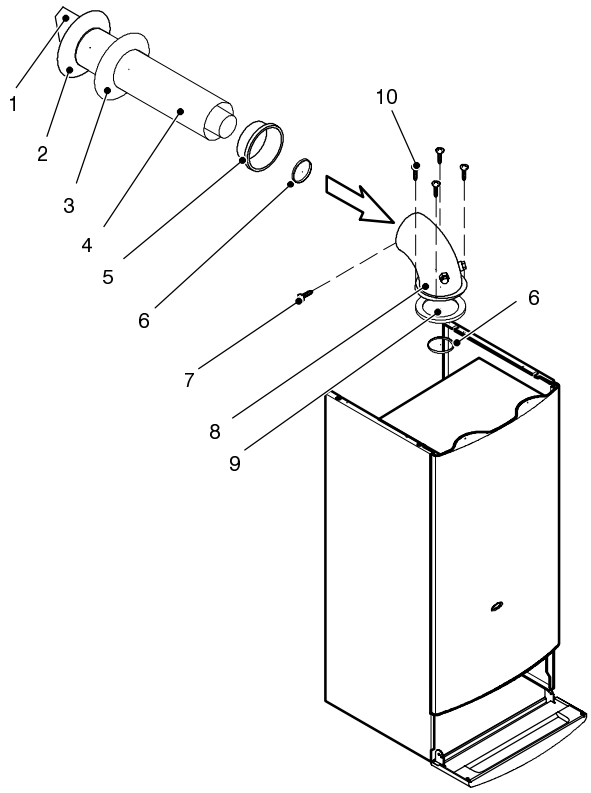

12 WALL MOUNTING TEMPLATE (rear flue)

IMPORTANT

1 Tape the template into the selected position.

2 Ensure squareness by hanging a plumbine.

3 Mark onto the wall the following:

a. the wall mounting plate screw positions
b. the position of the flue duct.
(Mark the centre of the hole as well as the circumference)
c. the lower fixing point screw position

4 Remove the template from the wall

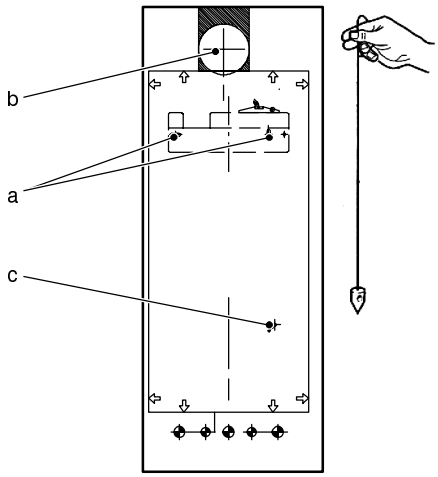

13 WALL MOUNTING TEMPLATE (side flue)

IMPORTANT

1 Tape the template into the selected position.
2 Ensure squareness by hanging a plumbine.
3 Mark onto the wall the following:

a. the wall mounting plate screw position
b. Extended the centre line as shown.
Mark the flue ductcentre from the corner (see diagram and template)
c. the lower fixing point screw position

Note. *mark the centre of the hole as well as the circumference.*

4 Remove the template from the wall

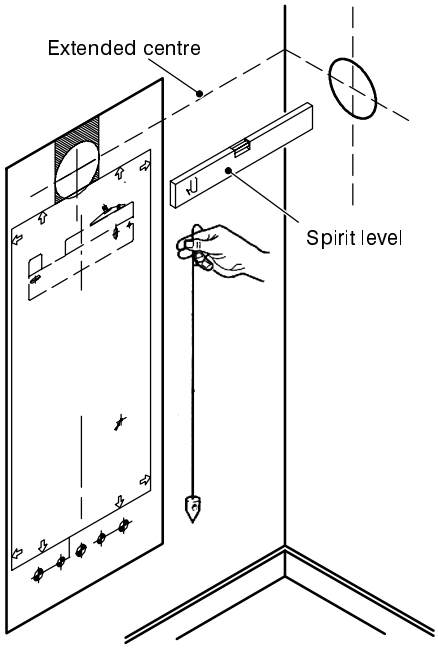

14 DRILLING THE WALL
Rear flue shown

IMPORTANT

Ensure that, during the cutting operation, masonry falling outside the building does not cause damage or personal injury.

1 Cut the flue hole (preferably with a 5” core boring tool), ensuring that the hole is square to the wall.

2 Measure and note the wall thickness “W”.

3 Drill the fixing holes with an 8mm (5/16”) masonry drill. Fit suitable wall plugs (not provided).

***Note**. If the teminal is to be sited within 25–40 mm of a corner or vertical pipe (refer to Table 6) then the hole MUST be accurately cut and the rubber weather seal trimmed around the groove provided.*

(The terminal wall plate cannot be fitted close to a corner).

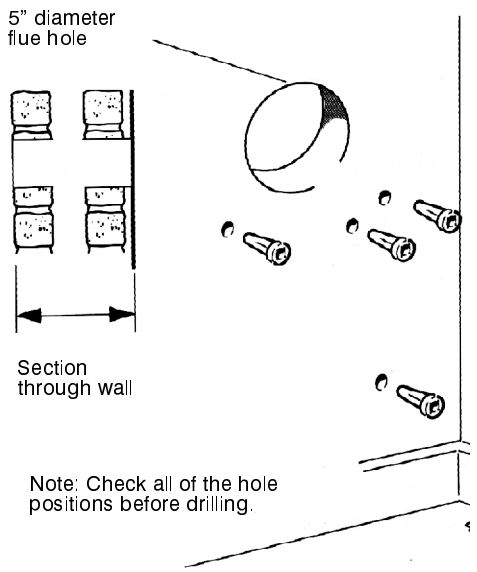

15 FITTING THE WALL MOUNTING PLATE

Refer to frame 25 for service connections.

Fit the wall mounting plate

Directly to the wall

- Offer up wall mounting plate.
- Screw through the fixing holes using 3 off no. 14x2” screws (not provided).
- Check alignment with spirit level.
- Tighten screws.

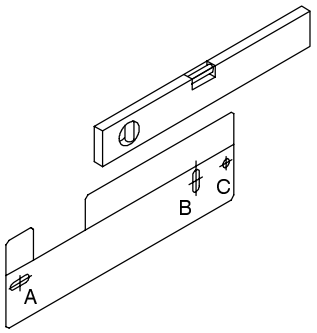

16 CUTTING THE FLUE
Wall thickness up to 600mm (23 5/8”)

1 The flue cut length is calculated as detailed in Frame 10.

2 Measure from the groove and mark the tube.

3 To ensure the tube is cut square, mark the flue all the way round, using, e.g. a long straight strip of paper with its ends overlapped.

4 Cut to length, using the cardboard support aid.

5 Remove the cardboard support and any burrs.

6 Mark around the air duct 10 mm from the cut end

7 Cut air duct only to be 10 mm shorter than the flue duct to allow for the engagement.

8 Clean and de–burr end of air duct

For flue lengths greater than 600 mm (23 5/8”) refer to Frames 21 to 24 – Flue Extension Ducts

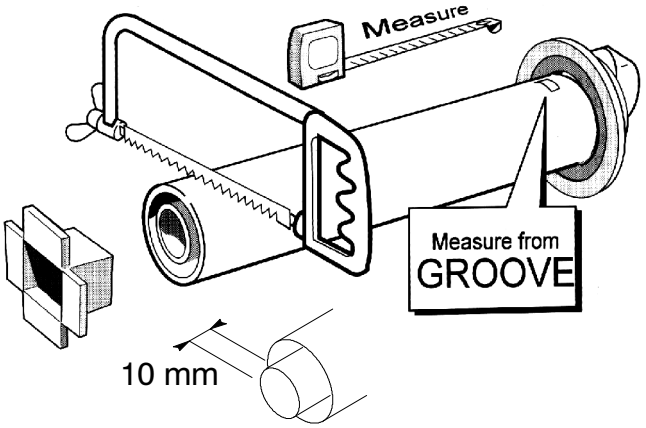

17 FITTING THE FLUE

Pass the cut flue through the prepared hole, ensuring that the groove is uppermost.

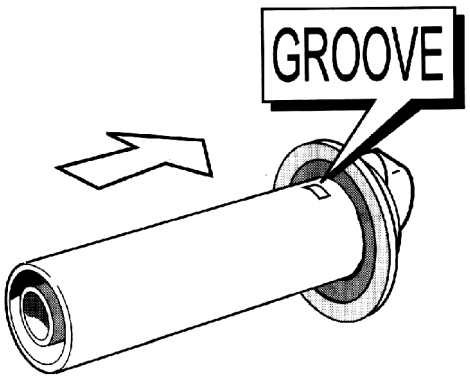

18 MOUNTING THE BOILER

In order to ensure the boiler front panel is not damaged during boiler mounting, remove the bottom panel (2 screws A) and the boiler front panel by opening the door and removing the two fixing screws B.
Push the front panel upwards to disengage and store in a safe place.

Lift the boiler onto the wall mounting plate locating the bar at the rear of the back panel assembly into the bracket

Lower the boiler into position.

Secure the appliance to the wall by fixing a screw through the lower fixing point.

Remove the protective coating from the jacket front, sides and bottom panels.

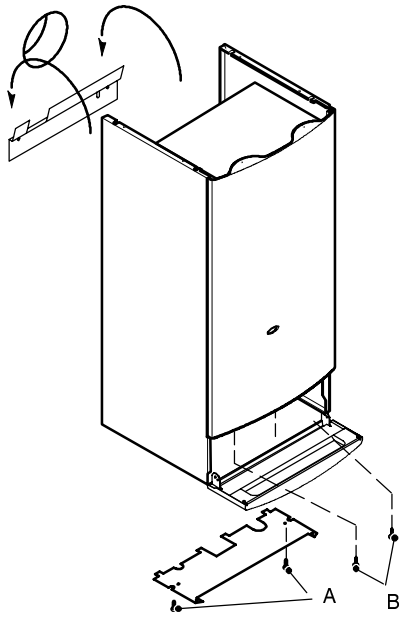

19 CONNECTING THE TURRET TO THE BOILER

1 Fit the Elbow – Boiler gasket on the boiler.

2 Fit internal sealing gasket.

3 Fit the duct – elbow sealing gasket on the turret so that the edge of the gasket coincides with the edge of the duct.

4 Fit the flue duct gaskets on the gasket seats of the flue turret directing the lips of the gaskets as shown.

5 Mate the turret to the flue.

6 Secure the turret on top of the boiler with the 4 screws provided.

7 Drill a 3.2mm hole through the flue and turret. Secure the turret to the flue, using the self tapping screw provided.

Flues over 1 metre long

8 Fix the flue support bracket to the wall, using the wall plug and wood screw.
For standard installations use the short wood screw.

Make good the internal wall surface using the seal provided.

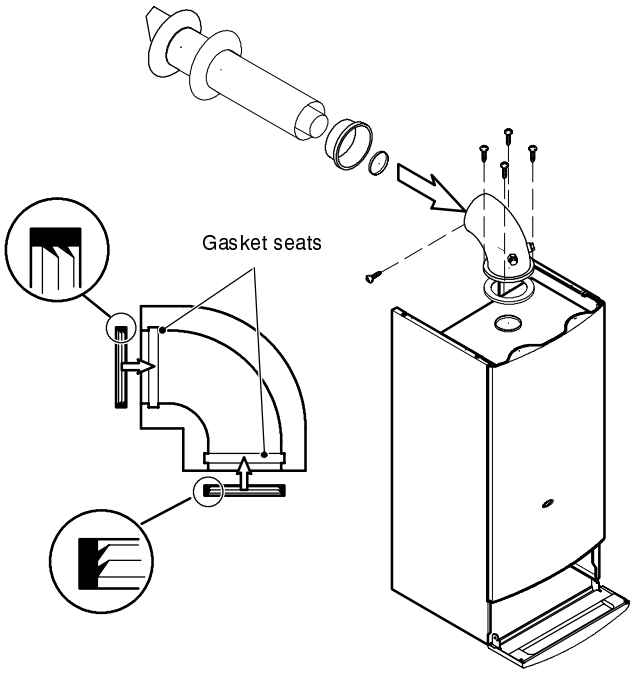

20 TERMINAL WALL PLATE

This plate allows neat concealment and full compression of the rubber seal. It should be used (where practicable):

a. When the wall is more than 24” thick (to support the flue weight and prevent movement).

or

b. When the hole has not broken through neatly.

or

c. When the wall face is rough and the rubber seal on its own would be ineffective.

1 Position the terminal wall plate over the terminal.

2 Drill 4 fixing holes with a 7mm (1/4”) masonry drill.

3 Insert the 4 plastic plugs provided in h/ware pack.

4 Secure the plate with 4 of the No.10 x 2” screws provided in the hardware pack.

Note. If the terminal is less than 2m (6’ 6”) above ground level, an approved terminal guard should be fitted. Refer to ’Flue Installation’,

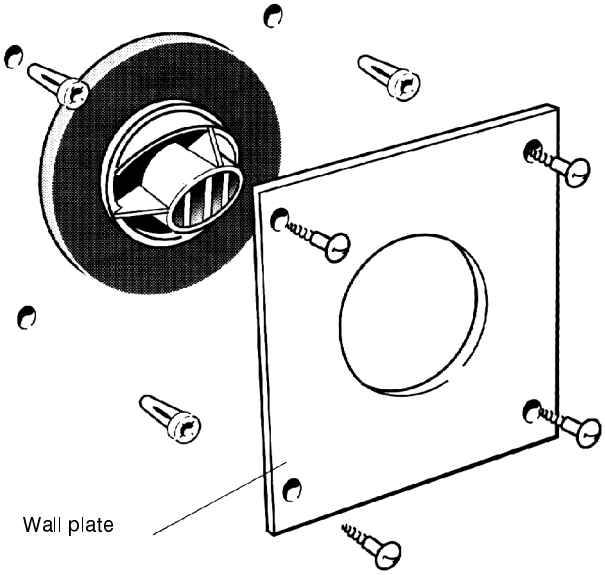

21 FLUE EXTENSION DUCT PACK D CONTENTS

Use a maximum of:
2 extension ducts on model *C95FF*
3 extension ducts on model *C80FF*

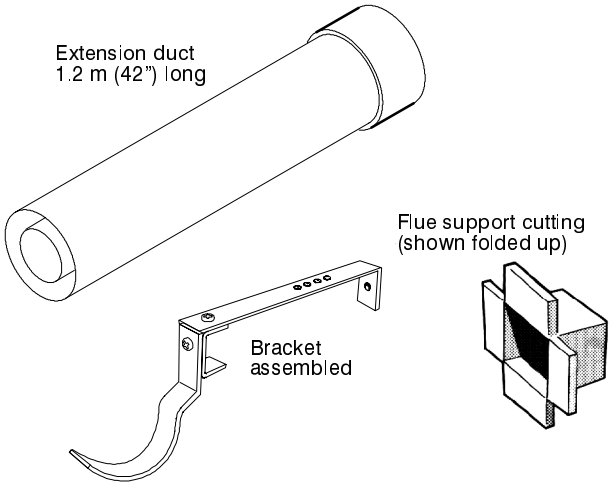

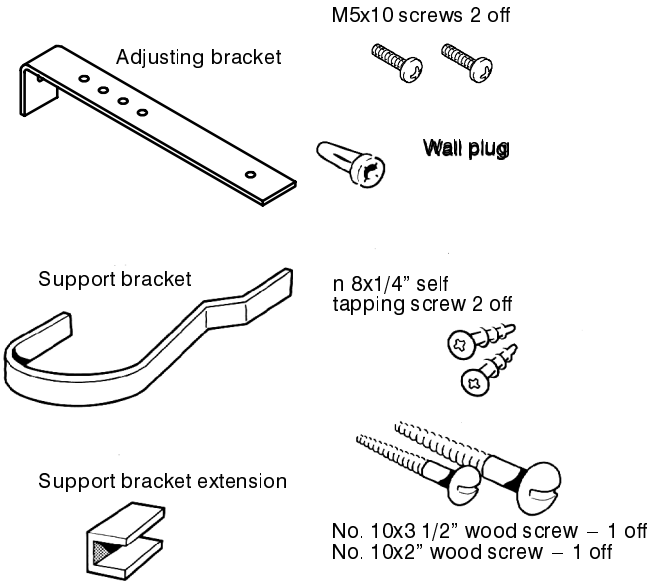

22 ASSEMBLING THE EXTENDED FLUE

1 Remove the cardboard support aid from the flue and place safely to one side.
2 Fit the inner flue extension duct onto the inner flue duct.
3 Fit the outer flue extension duct onto the outer air duct
4 Drill one 3.2 mm (1/8") dia hole through the outer air duct. **Do not drill the inner flue duct.**
5 Insert the self tapping screw provided to fix the air duct in position.
6 Repeat steps 1 – 5 if a second flue extension is required.

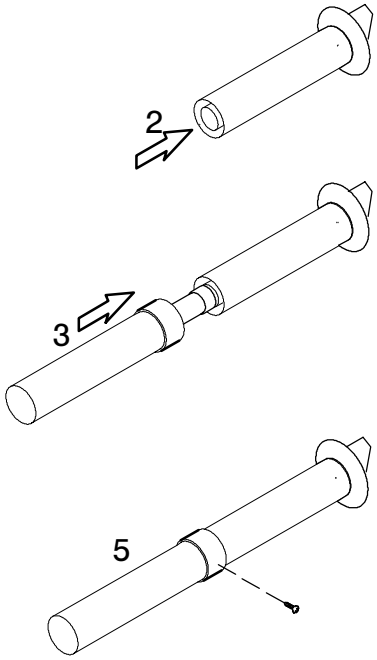

23 CUTTING THE FLUE TO LENGTH

1 Check the flue length measurement made in Frame 10.
2 Use this dimension to mark the flue length, starting from the groove, as illustrated.
3 To ensure a square cut, mark the flue all the way round, using, e.g. a steel tape or paper strip with the ends overlapped.
4 Cut to length, using the cardboard support aid.
5 Remove the cardboard offcuts and deburr the metal edges.
6 Mark around the air duct 10 mm from the cut end
7 Cut air duct only to be 10 mm shorter than the flue duct to allow for the engagement.
8 Clean and de – burr ends of ducts.

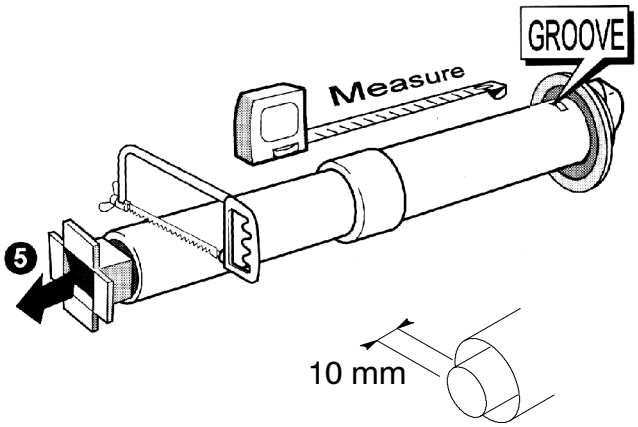

24 FIXING THE FLUE TO THE TURRET

1 Insert the flue into the prepared hole. Refer to Frame 17 for details.

2 Mate the flue to the turret. Refer to Frame 19 for details.

Note. *To facilitate turret fixing or removal do not make good the wall.*

Use the finishing gasket provided.

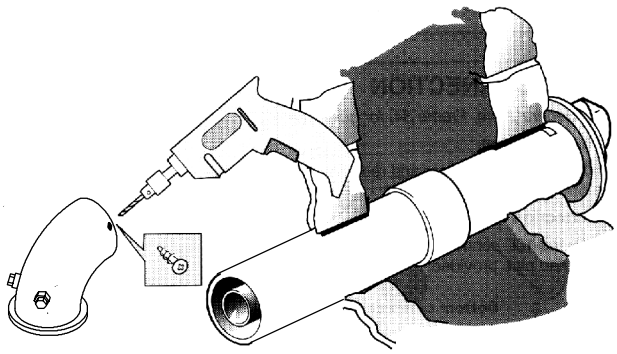

25 CONNECTIONS

Fit the service valves washers and tail pipes as shown.

Connect to the tail pipes by proprietory fittings.

The pipework may be directed up, down or through the rear wall as required.

To allow for any future removal of the boiler it is suggested that union joints be incorporated into the upward pipework.

See additional illustration for upward pipework routing

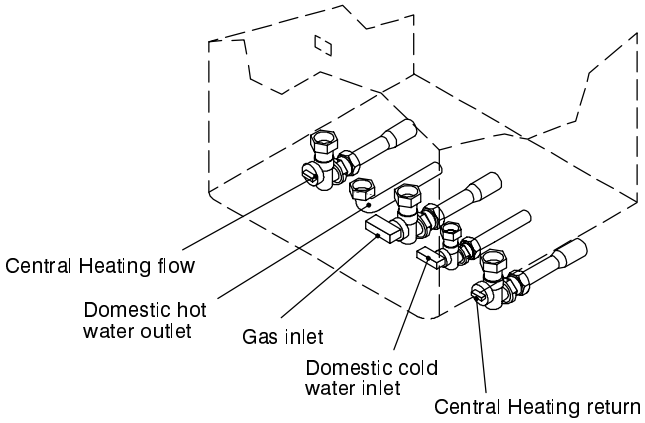

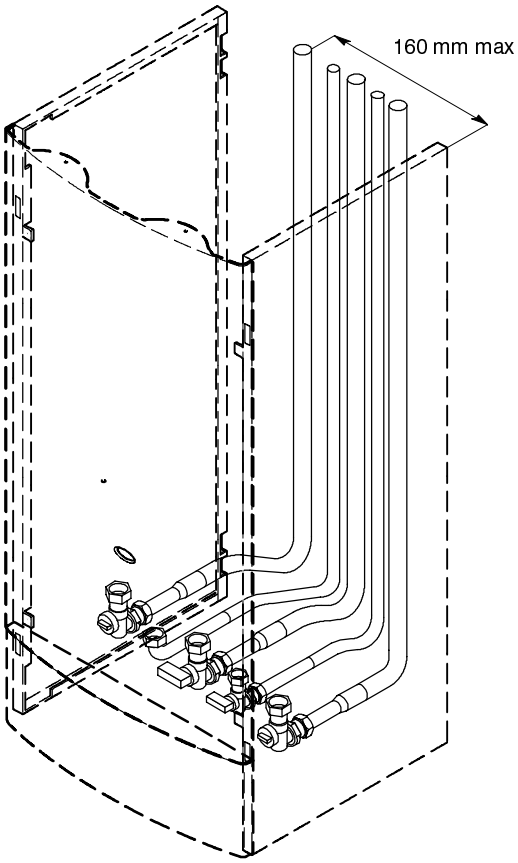

26 SAFETY VALVE DRAIN

The discharge pipe should be positioned so that the discharge of water or steam cannot create a hazard to the occupants of the premises or damage to electrical components and wiring.

The discharge pipe shall be 15 mm copper and connected using the nut and olive in the hardware pack.

The suggested routing of the pipe is shown in the following drawing.

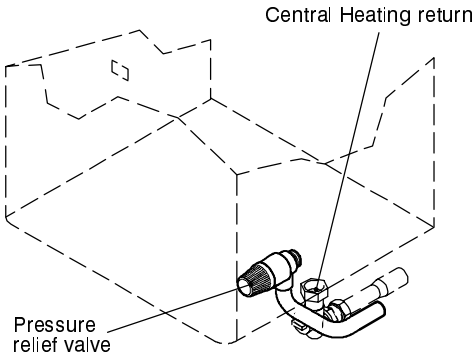

27 ELECTRICAL CONNECTIONS

Warning. This appliance MUST be efficiently earthed

A mains supply of 230 V ~ 50 Hz is required.

All external controls and wiring MUST be suitable for mains voltage. Wiring should be 3 core PVC insulated flexible cord NOT LESS than 0.75 mm^2 (24 x 0.2mm) and to BS. 6500, Table 16. (0.5mm^2 flex is not acceptable – for mechanical, not electrical reasons.)

Wiring external to the boiler MUST be in accordance with the current I.E.E. (BS7671) Wiring Regulations and any local regulations.

The supply connection is intended to be made via a double pole switch having a 3 mm (1/8") contact separation in both poles, serving only the boiler and system controls. A 3 pin UNSWITCHED socket may, alternatively, be used.

The fuse rating should be 3 A.

28 ELECTRICAL CONNECTIONS Incoming mains wiring detail

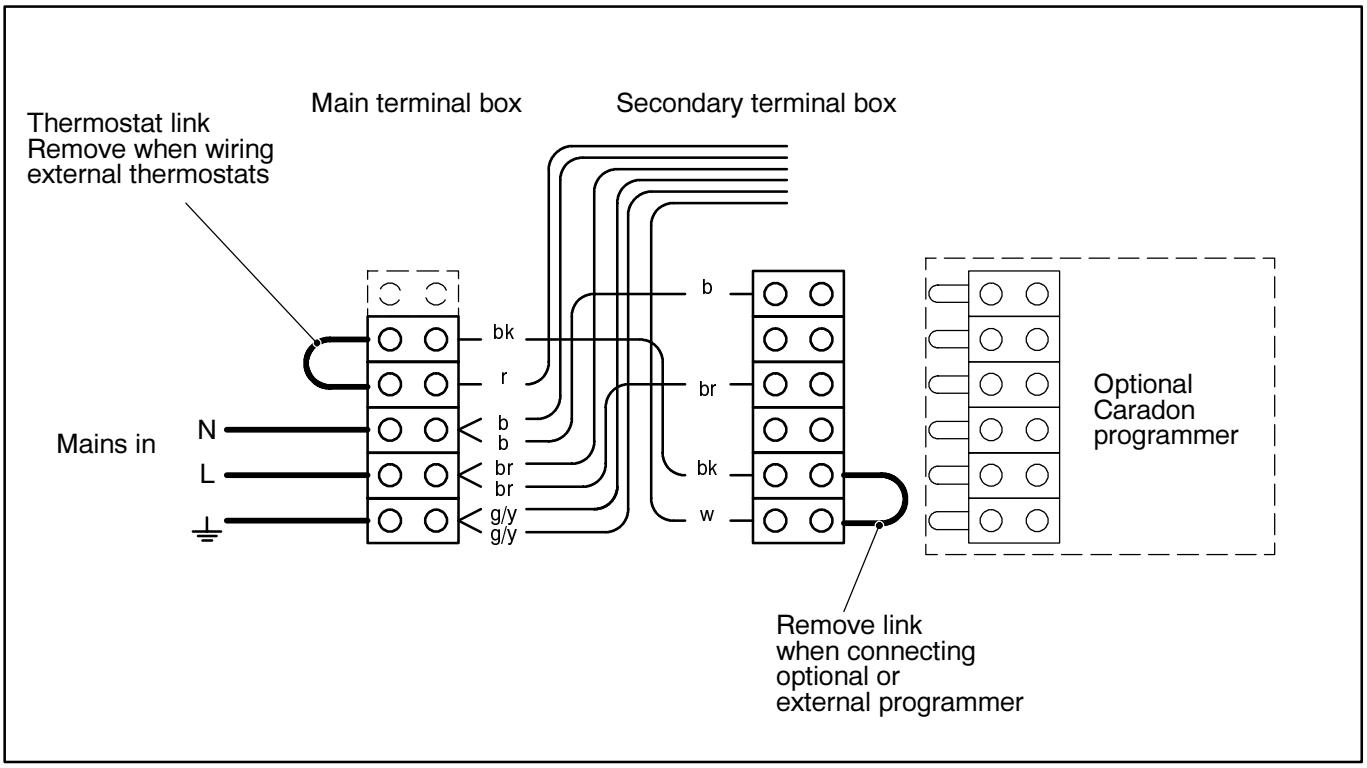

Note: Ensure that the lengths of the current conductors are shorter than the earth conductor so that if the cable slips in its anchorage the current carrying conductors become taut before the earth conductor.

29 PICTORIAL WIRING

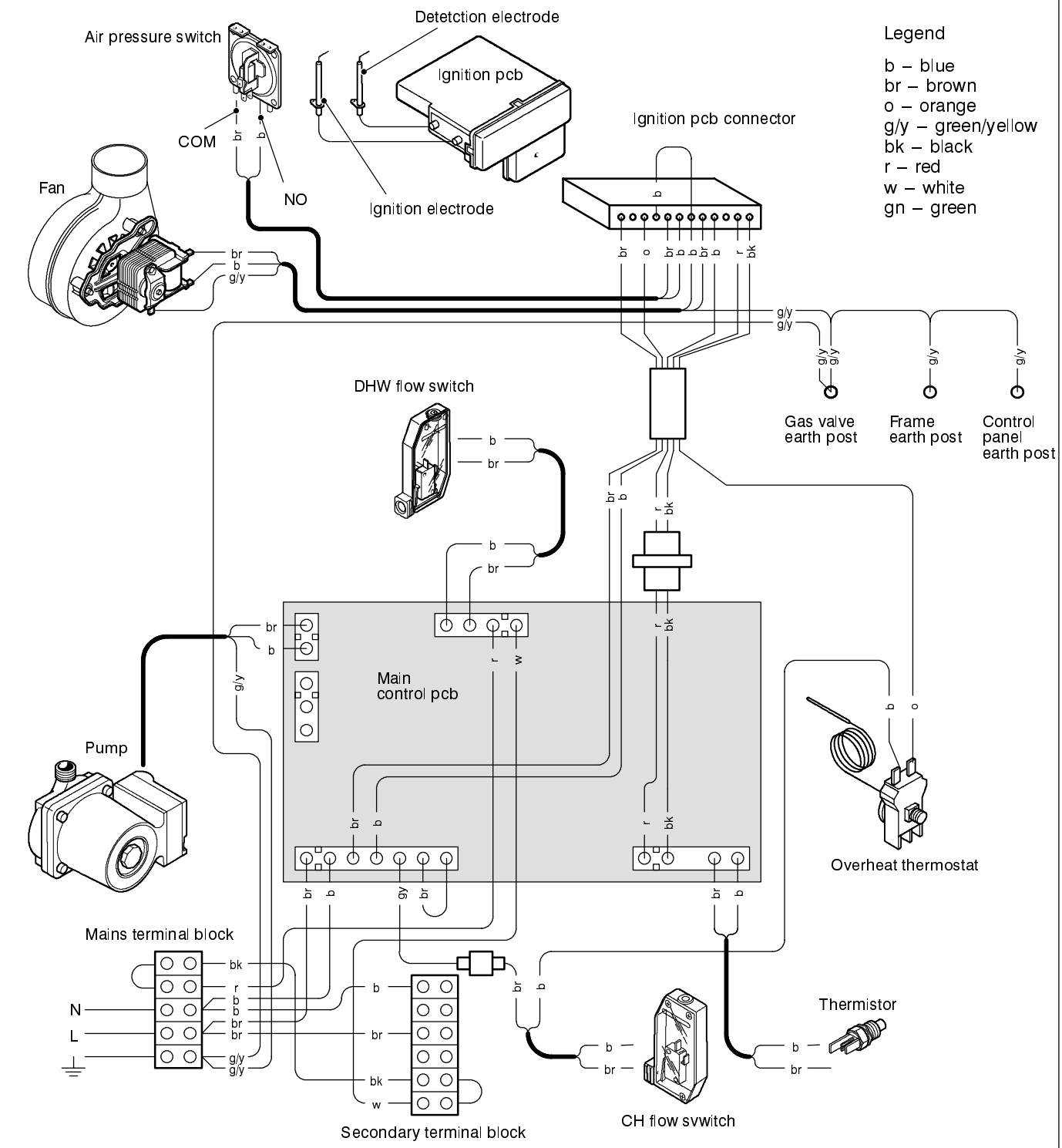

30 FUNCTIONAL FLOW DIAGRAM

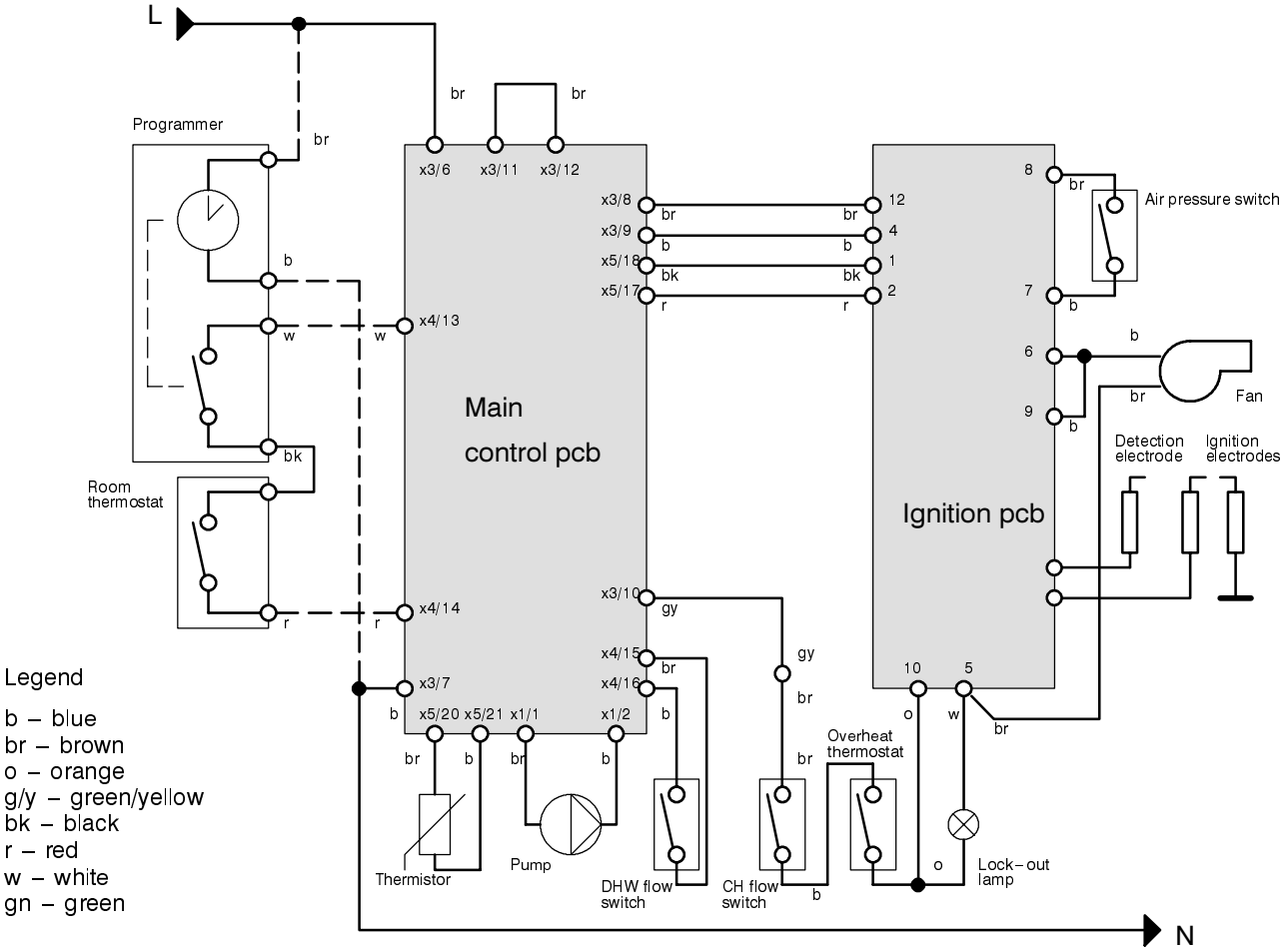

31 EXTERNAL ELECTRICAL CONTROLS

Wiring external to the boiler MUST be in accordance with the current I.E.E. (BS.7671) Wiring Regulations.

The fuse rating should be 3A.

Optional Programmer Kits

These are supplied in either digital or analogue options, each with the relevant instructions.

External Programmers

This should be of the single channel type (as this boiler does not incorporate a pre–heat facility for the istantaneous hot water service).

Programmer only – see diagram A.

Programmers with room thermostat – see diagram C.

Room Thermostat

This should be wired as shown in diagrams B & C. If the thermostat has a neutral connection, use it (it provides for more energy efficient operation by reducing switching temperature differentials).

Frost protection

Central heating systems fitted wholly inside the house do not normally require frost protection as the house acts as a 'storage heater' and can normally be left at least 24 hours without frost damage.

However, if parts of the pipework run outside the house or if the boiler will be left off for more than a day or so then a frost thermostat should be wired into the system.
This is usually done at programmer, in which case the programmer selector switches are set to OFF and all the other controls MUST be left in the running position.

The frost thermostat should be sited in a cold place but where it can sense heat from the system.

Wiring should be as shown, with minimal disturbance to other wiring of the programmer.

Diagram A shows an application to boilers fitted with the **Optional Programmer Kit.**

Diagrams B & C show applications to boilers fitted with alternative time controls.

Designation of the terminals will vary but the programmer and thermostat manufacturers' leaflets will give full details.

Note. If the boiler is installed in a garage it may be necessary to fit a pipe thermostat, preferably on the return pipework.

Earths are not shown for clarity but must never be omitted.

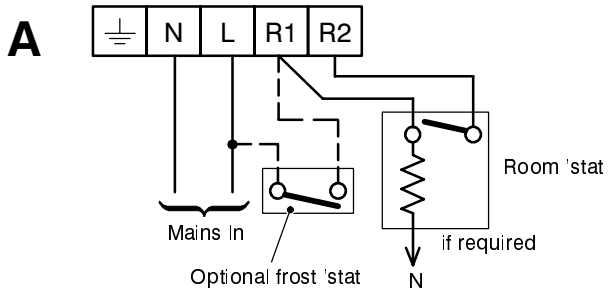

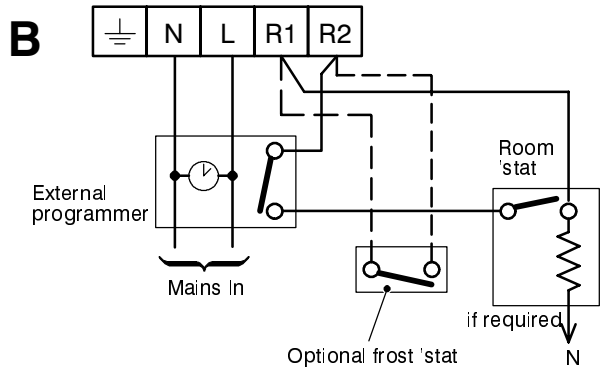

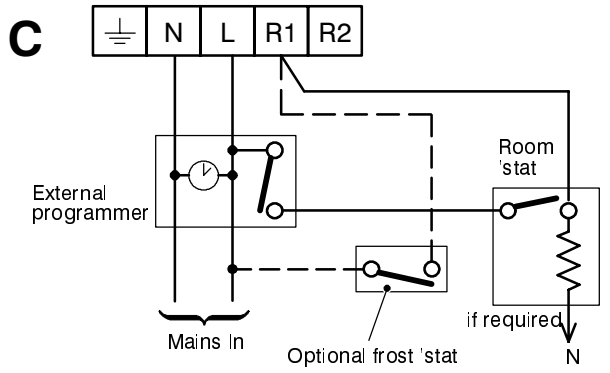

N.B. These diagrams are schematic only and do not show external terminal strips etc.

32 INITIAL LIGHTING

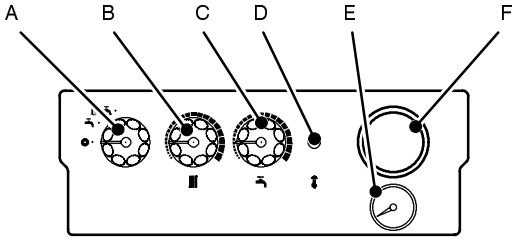

Legend

A Main switch

B Radiator temperature control

C Hot water temperature control

D Overheat thermostat reset button

E System pressure gauge

F Programmer (optional)

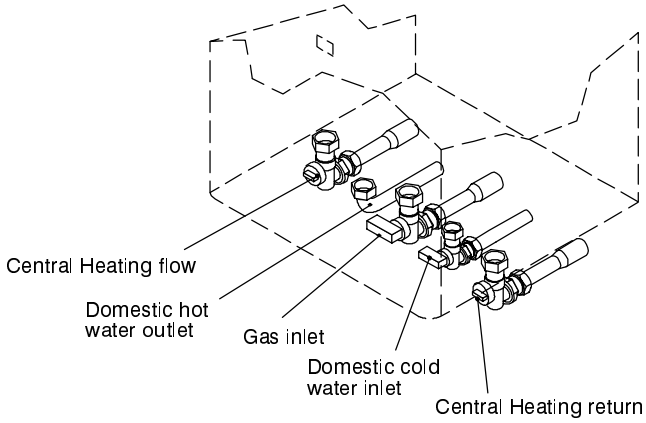

IMPORTANT Before lighting the boiler you should note especially that:

1 Check that all the drain cocks are closed and any valves in the flow and return are open.

2 Check that the system has been filled and pressurised and that the boiler is not air locked.

3 Check that the overheat thermostat (D) is calling for heat – press the reset button.

4 Remove boiler front panel and lower the control panel.

5 Remove the screw in the burner pressure test point indicated on the following picture and connect a gas pressure gauge via a flexible tube.
Be sure to select the correct pressure test point. Refer to Tables for pressures.

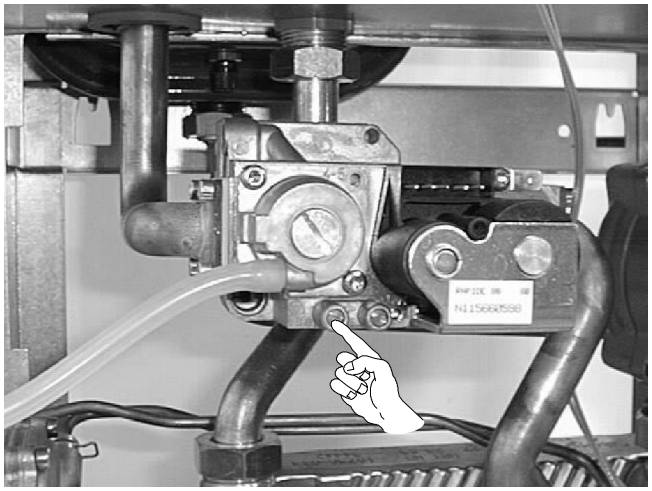

6 Check that the gas service cock is ON.

7 Switch the electricity supply ON and check that all external controls are calling for heat.

8 Set the main switch (A) to 'ON'. Following a pre–purge period the gas control solenoid valve should open and the spark commence, continuing until the burner is established.

9 Check that the burner lights smoothly. If this does not occur within 20 seconds, turn the on/off switch to OFF, wait for 5 seconds then try again. If the burner still does not light, refer to the 'Fault Finding' section.

10 Test for gas soundness around ALL boiler gas components, using leak detection fluid.

11 Operate the boiler for 10 minutes to stabilise the burner temperature.

12 Check that the burner pressures are correct. The boiler is factory pre–set and should not need adjustment. However if adjustment is required refer to frame 33.

13 Set the boiler main switch to 'OFF'.

14 Remove the pressure gauge and tube. Replace the sealing screw in the pressure test point. Ensure a gas tight seal is made.

15 Refit the boiler front panel amd bottom panel, using the screws previously removed.

16 Switch the boiler on again.

33 TO ADJUST PRESSURES

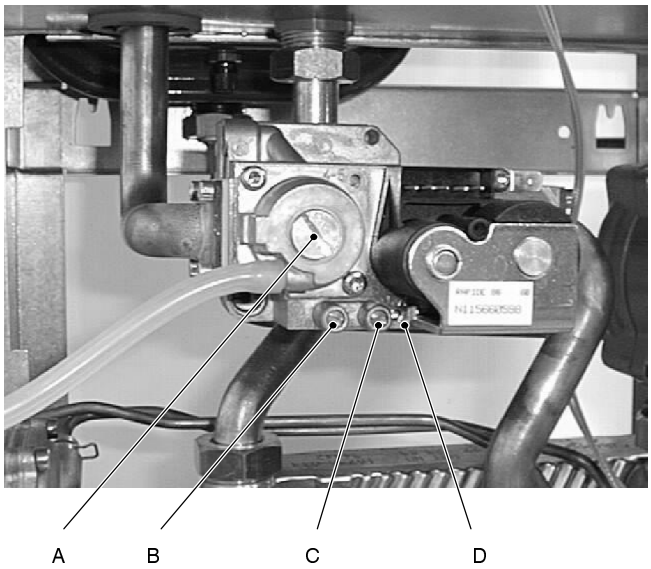

A Burner pressure adjustment, maximum

B Burner pressure test point

C Inlet pressure test point

D Burner pressure adjustment, minimum

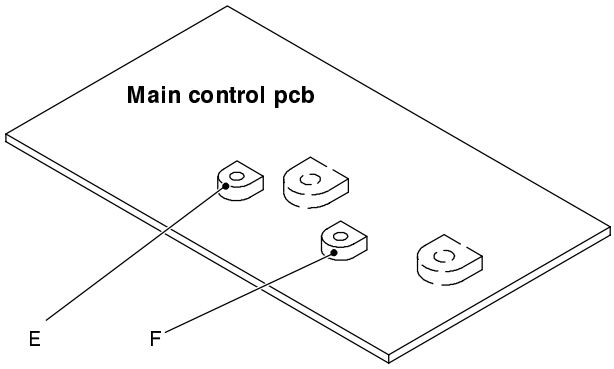

E Minimum burner pressure potentiometer

F Maximum burner pressure potentiometer

Burner pressure adjustment

Ignition rate dajustment

1 Disconnect the detection lead.

2 Open DHW tap.

3 Observe ignition burner pressure during 10 sec. ignition period (4 mbar); adjust the pressure if necessary using the “wheel” on the ignition module indicated in the following drawing. If the burner extinguishes press the reset button and the burner will re–light.

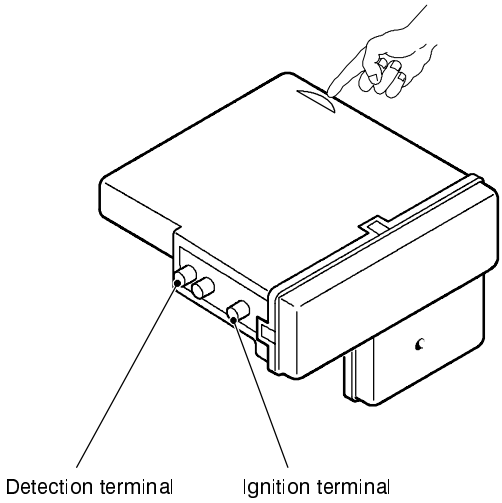

4 Close the DHW tap

5 Re–connect the detection lead

Minimum valve setting

1 Set thermostats for CH demand.

2 Turn both the CH maximum and minimum burner pressure potentiometers E and F fully to minimum (anti–clockwise).

3 Observe the burner pressure.

4 If necessary adjust the minimum valve setting to:
1.4 (0.6) mbar (in w.g.) for ***C80FF*** model
1.8 (0.7) mbar (in w.g.) for ***C95FF*** model
burner pressure using the adjustment screw D.

Minimum central heating setting

1 Slowly turn the potentiometer E clockwise to increase the pressure to geater than:
1.4 (0.6) mbar (in w.g.) for ***C80FF*** model
1.8 (0.7) mbar (in w.g.) for ***C95FF*** model.

2 Slowly turn the potentiometer E anti–clockwise and set to
1.4 (0.6) mbar (in w.g.) for ***C80FF*** model
1.8 (0.7) mbar (in w.g.) for ***C95FF*** model burner pressure.

Maximum domestic hot water setting

1 Open a DHW tap to a high flowrate to ensure maximum demand.

2 Observe burner pressure

3 If adjustment is necessary remove sealing cap A.

4 Adjust the burner pressure to:
9.5 (3.8) mbar (in w.g.) for ***C80FF*** model
11.0 (4.4) mbar (in w.g.) for ***C95FF***
turning the adjustment screw clockwise to increase the pressure.

5 Close the DHW tap and replace the cover A.

Maximum central heating setting

Adjust the CH maximum burner pressure potentiometer F to:
9.5 (3.8) mbar (in w.g.) for ***C80FF*** model
11.0 (4.4) mbar (in w.g.) for ***C95FF***
burner pressure.

Minimum operating pressure

Minimum DHW supply pressure to achieve maximum output is 0.9 bar.

34 COMMISSIONING AND TESTING

A. Electrical Installation

Checks to ensure electrical safety should be carried out by a competent person.

ALWAYS carry out the preliminary electrical system checks, i.e. earth continuity, polarity, resistance to earth and short circuit, using a suitable test meter.

B. Gas Installation

1 The whole of the gas installation, including the meter, should be inspected and tested for soundness and purged in accordance with the recommendations of BS. 6891.

2 Purge air from the gas installation by loosening the gas cock union and purge until gas odour is detected.

3 Retighten the union and test for gas soundness.

WARNING. Whilst effecting the required gas soundness test and purging air from the gas installation, open all windows and doors, extinguish naked lights and DO NOT SMOKE.

35 GENERAL CHECKS

Make the following checks for correct operation:

1 Hot water

a. Fully open all DHW taps in turn and ensure that water flows freely from them.

b. Close all taps except the furthest one from the boiler and check that the boiler is firing at maximum rate.

c. Ensure that DHW temperature of approximately 35 °C rise is obtained at the tap. This corresponds to a flow rate of about
9.5 (2.1) l/min (gpm) ***C80FF***
11.4 (2,52) l/min (gpm) ***C95FF***

d. Turn off the DHW tap.

2 Central heating

Operate each control separately and check that the main burner or circulating pump, as the case may be, responds.

3 Gas rate

Check the boiler gas rate when the boiler is at full DHW output (i.e. serving HW at a flow rate of at least 10 litres per minute, open more than one tap if necessary).

The gas rate will normally be between
44.5 (1.6) litres/min (ft^3/min) for the model ***C80FF***
48.7 (1.9) litres/min (ft^3/min) for the model ***C95FF***
checked at the gas meter, with no other appliance in use. If this check is not possible, ensure that the burner pressure is:
9.5 (3.8) mbar (in. w.g.) for the model ***C80FF***.
11.0 (4.4) mbar (in. w.g.) for the model ***C95FF***.

4 Water circulation system

Note. Fernox Superfloc flushing solution should be used during the flushing procedure.

a. With the system HOT examine all water connections for soundness.

b. With the system still HOT, turn off the gas, water and electricity supplies to the boiler and drain down, to complete the flushing process.

c. Refill the system, adding inhibitor (see 'Water Treatment'), if required.

Vent as necessary to clear all air and, again, check for water soundness. After venting, repressurise as required.

d. Balance the system. It is suggested that, initially, all radiator handwheel valves (or TRVs if fitted) be set fully open, that all lockshield valves be set a half–turn open.

Make minor adjustments to each radiator to achieve the same differential on all.

Finally, set the system controls to the users requirements.

If an optional programmer kit is fitted refer to the instructions supplied

36 HANDING OVER

After completing the installation and commissioning of the system, the installer should hand over to the householder by the following actions:

1 Hand the User's Instructions to the householder and explain his or her responsibilities under the Gas Safety (Installation and Use) Regulations 1994 and amendments 1996 or rules in force.

2 Draw attention to the Lighting Instruction label affixed to the inside of the lower front door.

3 Explain and demonstrate the lighting and shutting down procedures.

4 The operation of the boiler and the use and adjustment of ALL system controls should be fully explained to the householder, to ensure the greatest possible fuel economy consistent with household requirements of both heating and hot water consumption.

5 Advise the user of the precautions necessary to prevent damage to the system and to the building, in the event of the system remaining inoperative during frosty conditions.

6 If a programmer kit is fitted, draw attention to the Programmer Kit User's Instructions and hand them to the householder.

7 After installation, commissioning and customer hand–over instructions please complete the benchmark appliance log book and leave this with the customer.

8 Stress the importance of regular servicing by a CORGI registered installer and that a comprehensive service should be carried out AT LEAST ONCE A YEAR

Emphasise to the user that the boiler may stop working if the system pressure is lowered by draining radiators to decorate behind them. In particular, explain to the user how the domestic hot water temperature varies with flow rate. This is especially important when water is drawn off while the boiler is already running for central heating (refer to 'CAUTION' in User's Instructions page 4).

37 SERVICING SCHEDULE

To ensure the continued safe and efficient operation of the appliance it is recommended that it is checked at regular intervals and serviced as necessary.

The frequency of servicing will depend upon the installation condition and usage but should be carried out at least annually.

It is the law that any service work must be carried out by a registered CORGI installer.

1 Turn the heating controls to maximum so that the boiler lights and remains running. Check that no other gas appliances in the house are in use or likely to be used.
2 When the boiler has settled down check the gas rate at the meter (if the meter is of the pointer type you should time only complete revolutions of the pointer). Check the gas rate against the figures given in Table 2 for CH operation.
3 Fully open a hot water tap. When the boiler has settled down check the gas rate, as in step 2, checking the measured rate against the figures given in Table 3 for HW operation.
4 Check the percentages of CO and CO_2 in the flue gases at the sampling point indicated in the following drawing.

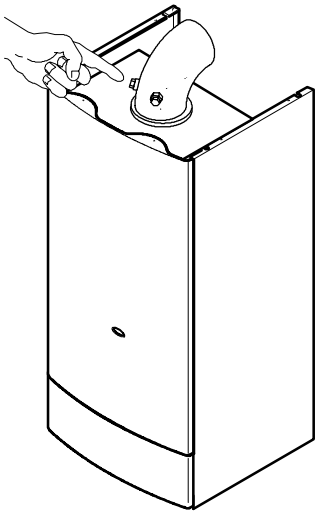

Note. If your meter reads CO in parts per million the figure must be divided by 10,000 to convert it to a percentage.

5 If the ratio of CO/CO_2 is less than ,004 and the gas rates measured in steps 3 and 4 are close to nominal then no further action need be taken. If not, proceed to step 6.
6 Clean the main burner.
7 Clean the heat exchanger.
8 Check the injectors for blockage or damage.
9 Check that the flue terminal is unobstructed.

The servicing procedures are covered more fully in Frames 38 to 43 and MUST be carried out in sequence.

WARNING.

ALWAYS turn off the gas supply at the gas service cock, and switch off and disconnect the electricity supply to the appliance before servicing.

Switching the boiler on/off switch 'off' when a frost thermostat is wired directly from the mains may leave a live feed to the boiler.

ALWAYS test for gas soundness and carry out functional checks on reassembly.

IMPORTANT. When work is complete the boiler inner front sealing panel MUST be correctly refitted, making a good seal.

DO NOT OPERATE THE BOILER IF THE SEALING PANEL IS NOT FITTED.

38 BOILER INNER CASE COVER REMOVAL

1 Turn off the gas supply at the gas service cock and disconnect the electricity supply.
2 Remove the screws A indicated and lift off the boiler front panel.

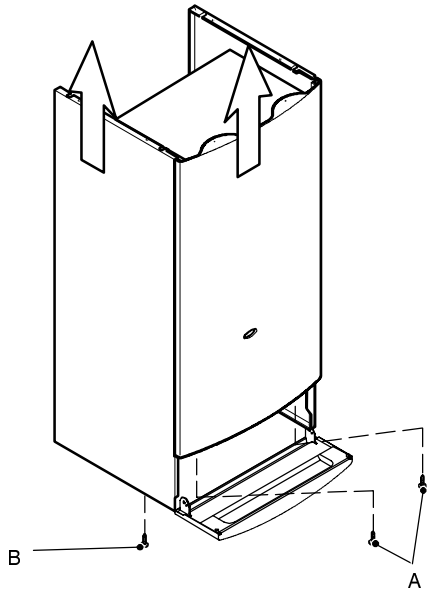

3 Loosen the screws B and lift off the right hand panel.
4 Release the four closing springs indicated and remove the inner case cover.

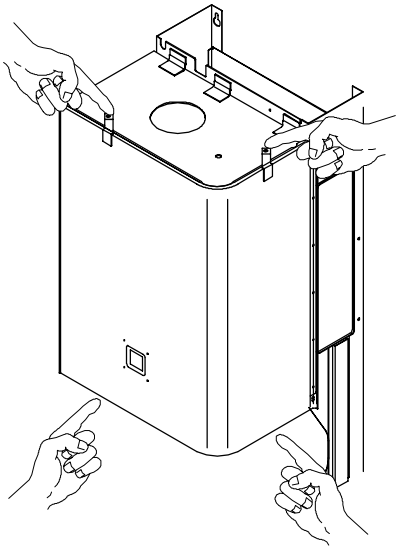

39 FAN REMOVAL AND CLEANING

1 Remove the inner case cover as explained in frame 38.
2 Disconnect the electrical harness from the fan.
3 Disconnect the pressure sensing pipe A from the fan.
4 Undo the fixing screws B and remove the fan.

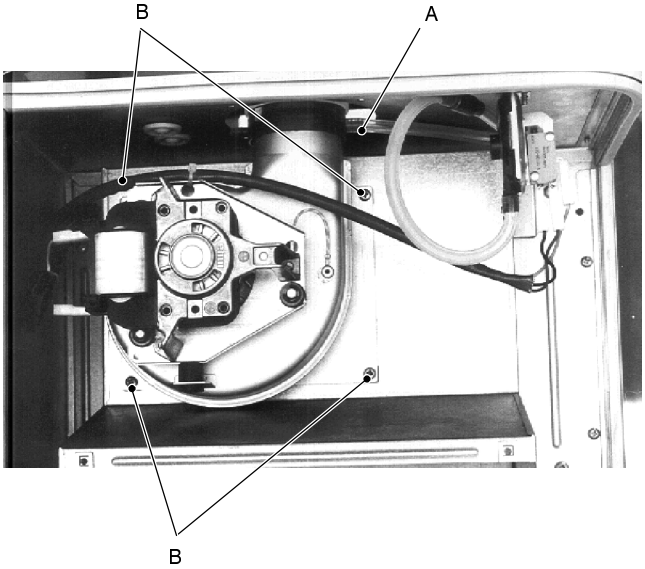

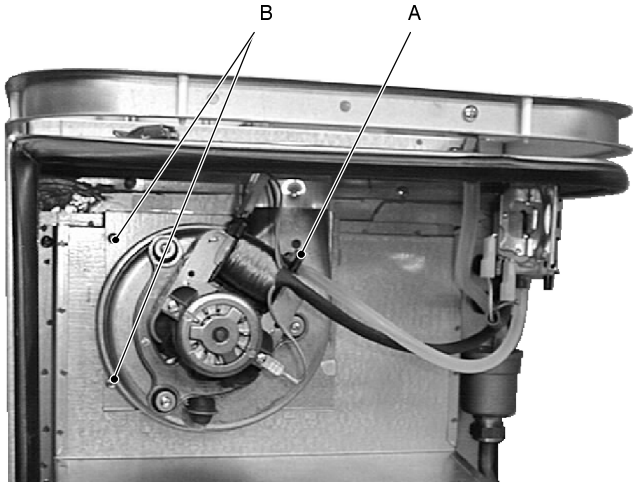

5 Check that the impeller runs freely. Clean with a soft brush or renew as necessary.
Refer to frame 53 for replacement.

Note: Always take care when handling the fan, in order to preserve the balance of the impeller.

40 BURNER REMOVAL AND CLEANING

1 Remove the inner case cover as explained in frame 38.
2 Undo the four screws A and remove the combustion chamber panel B.
3 Disconnect the electrodes leads from the ignition pcb.
4 Undo the four screws placed at the right and left sides of the burner and extract it.
5 Remove the grid C placed under the burner.
6 Brush off any deposits that may have collected on the burner, ensuring that the flame ports are unobstructed.
Note: brushes with metallic bristles MUST NOT be used.

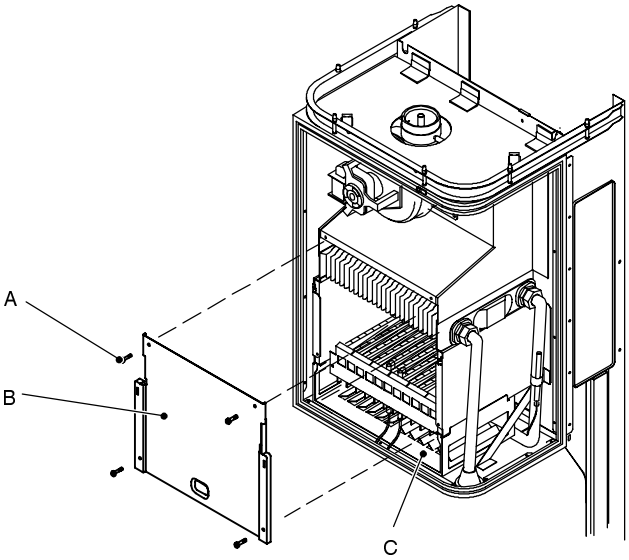

7 Inspect the spark and detection electrodes. Ensure they are clean and in good condition; repalce if necessary.
8 Check the spark electrodes gap is correct.

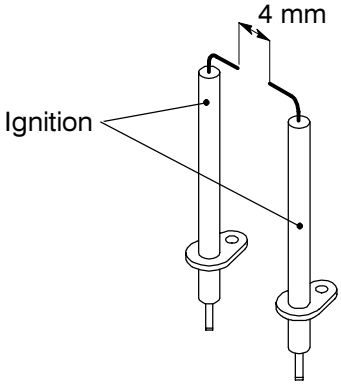

9 Check that the spark and detection electrodes leads are in good condition and renew as necessary.

41 CLEANING THE HEAT EXCHANGER

1 Open the combustion chamber as explained in steps 1 and 2 of frame 40.
2 Place a plastic sheet or similar beneath the boiler and remove all visible loose deposits from the heat exchanger fins, using a suitable brush.

42 RE–ASSEMBLY

Re–assemble the boiler in the following order:

1 Refit the grid.
2 Refit the burner.
3 Reconnect the electrodes to the ignition pcb. See frame 29 for right positioning of connectors.
4 Close the combustion chamber.
5 Reconnect the pressure sensing pipe to the fan.
6 Reconnect the fan electrical harness.
7 refit the inner case cover.
IMPORTANT. Ensure the boiler sealing panel is correctly fitted and that a good seal is made.
8 Refit the boiler right and front panels.
9 Turn on the gas supply at the gas service cock.
10 Reconnect the electrical supply.

43 BURNER PRESSURE CHECK

After any servicing, reference should be made to:

– Table 2 and Table 3 (or the data plate) which quote details of the burner pressures.

If the burner pressures are incorrect ensure the inlet pressure, with the appliance running, is correct (refer Table 1).

If the burner pressures require adjustment refer to frame 33 “To adjust pressures”.

If the appliance still does not operate correctly refer to the appropriate fault finding chart.

REPLACEMENT OF COMPONENTS

44 GENERAL

When replacing any component:

1 Isolate the electricity supply at the switched spur.
N.B. Turning the boiler “ON/OFF” switch does not isolate the permanent live supply to the boiler.
2 Turn off the gas supply.

IMPORTANT. When work is complete the inner case cover must be correctly fitted, ensuring that a good seal is made.

THE BOILER MUST NOT BE OPERATED IF THE INNER CASE COVER IS NOT FITTED.

45 THERMISTOR REPLACEMENT

1 Disconnect the electrical supply.
2 Gain access to the controls area by removing the boiler front panel. (refer to frame 38), remove the boiler bottom panel (held with 2 screws) and lower the control panel.
3 Close off the isolating cocks of the CH circuit at the bottom of the boiler.
4 Release system pressure by opening the main circuit drainage cock.
Do not release CH pressure using the pressure relief valve. It may cause debris within the system to foul the valve.
5 Disconnect the leads from the thermistor and unscrew it .
6 Screw in the new sensor, using a new gasket, reconnect and re–assemble in reverse order.
7 Open CH cocks and refill / re–pressurise pipework.
8 Test fire the boiler
9 Disconnect the filling loop.

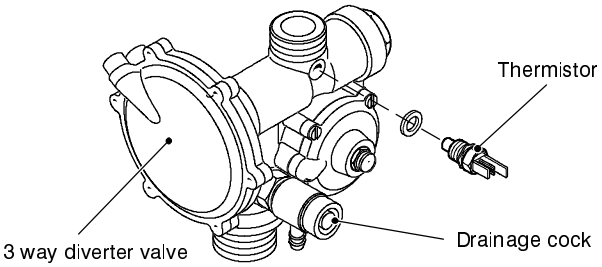

46 OVERHEAT THERMOSTAT REPLACEMENT

1 Disconnect the electrical supply.
2 Gain access to the controls area by removing the boiler front panel, the right hand panel and inner case cover (refer to frame 38), remove the boiler bottom panel (held with 2 screws) and lower the control panel.
3 Remove the springs which holds the temperature probe on the heat exchanger flow pipe and extract the probe from the sealed chamber.
4 Remove the cover of the main control pcb.
5 Disconnect the leads from the overheat thermostat.
6 Remove the protective cap and undo the nut that holds in place the overheat thermostat.
7 Remove the thermostat.
8 Fit the new thermostat, reconnect and re–assemble in reverse order.
9 Reconnect the supply and test fire the boiler.

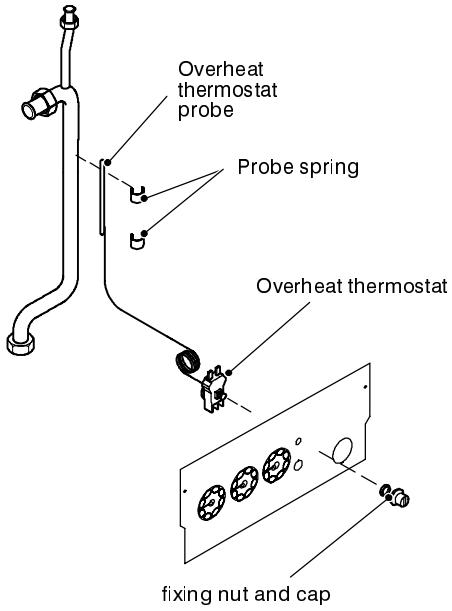

47 SPARK AND DETECTION ELECTRODE REPLACEMENT

1 Disconnect the electrical supply.
2 Remove the boiler front panel, the right hand panel and the inner case cover. Refer to frame 38.
3 Open the combustion chamber and disconnect the electrodes leads from the ignition pcb.
4 Undo the screw that fits the earth terminal of the right ignition electrode to the burner.
5 Remove the burner. Refer to frame 40.
6 Undo the screws that hold the electrodes and remove.
7 Fit new electrodes as necessary following the sequence illustrated.
8 Check the spark gap.
9 Re – assemble in reverse order.
10 Check the ignition and operation of the burner.

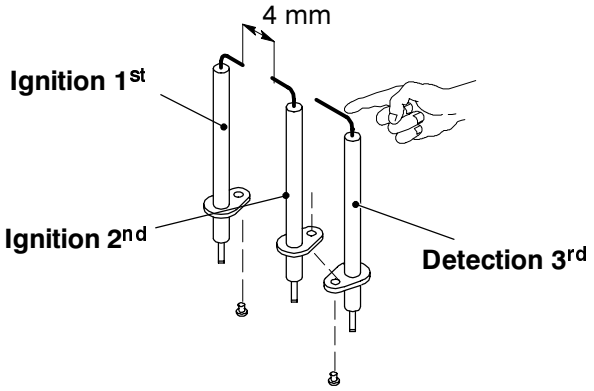

48 IGNITION PCB REPLACEMENT

1 Disconnect the electrical supply.
2 Gain access to the controls area by removing the boiler front panel. (refer to frame 38), remove the boiler bottom panel (held with 2 screws) and lower the control panel.
3 Undo the screw A that fits the ignition pcb on the gas valve.
4 Slide the terminal cover B downwards.
5 Disconnect the connector of the ignition pcb.
6 Remove the ignition pcb.
7 Fit the new ignition pcb and reassemble in reverse order.
8 Check the operation of the boiler.

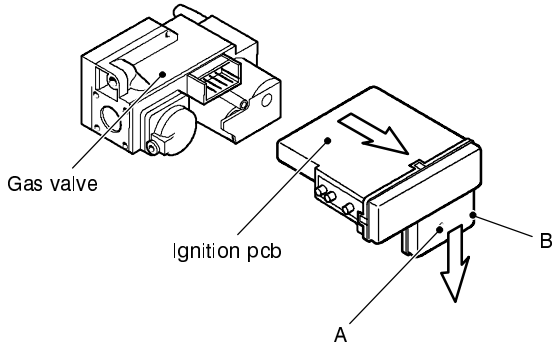

49 BURNER REPLACEMENT

1 Remove the inner case cover as explained in frame 38.
2 Undo the four screws A and remove the combustion chamber panel B.
3 Disconnect the electrodes leads from the ignition pcb.
4 Undo the four screws placed at the right and left sides of the burner and extract it taking care not to damage the electrodes.
5 Remove the spark and detection electrodes. Refer to frame 47.
6 Fit the electrodes on the new burner and check the spark gap.
7 Reassemble in reverse order.
8 Check the operation of the boiler.

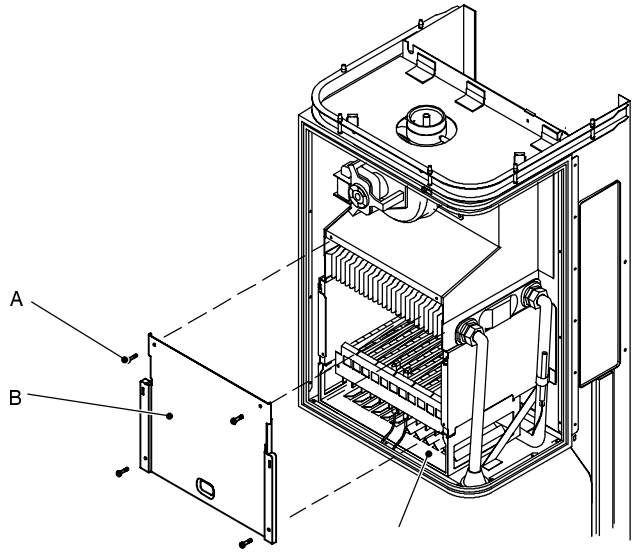

50 BURNER INJECTORS REPLACEMENT

1 Remove the burner. Refer to frame 49, steps 1 to 4.
2 Unscrew the injectors from the gas manifold.
3 Check that the new injectors are of the correct size and fit it using new gaskets.
4 Re – assemble in reverse order.
5 Check the operation of the boiler.

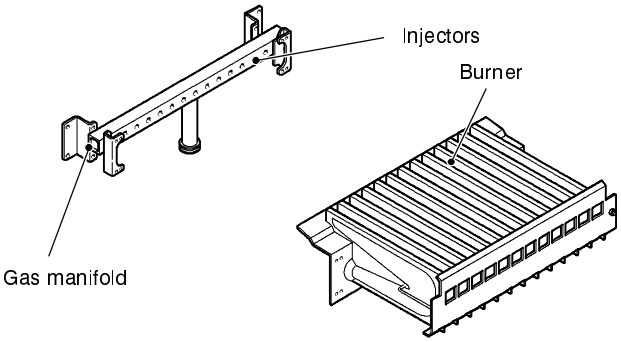

51 GAS VALVE REPLACEMENT

1 Turn off the gas supply at the gas service cock and disconnect the electricity supply.

2 Gain access to the controls area by removing the boiler front panel. (refer to frame 38), remove the boiler bottom panel (held with 2 screws) and lower the control panel.

3 Disconnect the connection of the ignition pcb and remove it. Refer to frame 48.

4 Disconnect the earth wiring from the gas valve.

5 Disconnect the pressure sensing pipe A from the gas valve.

6 Unscrew the eight Allen key screws B and remove the valve.

7 Fit the new gas valve in reverse order ensuring new gaskets are fitted.

8 Check the operation of the boiler.

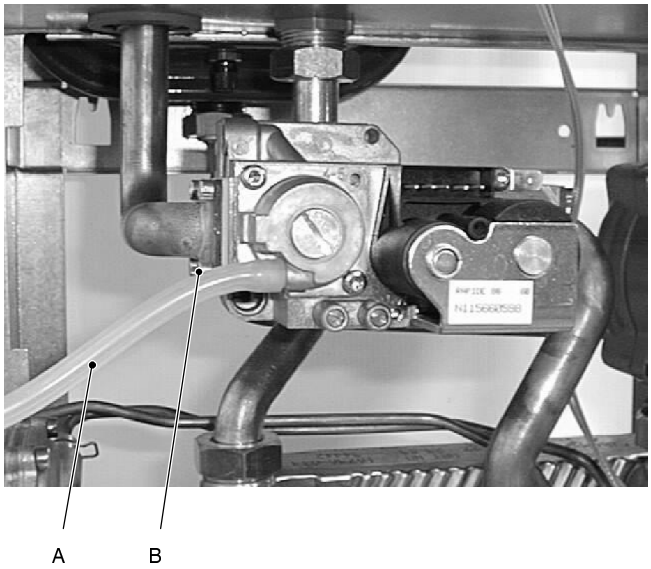

52 WATER PRESSURE GAUGE REPLACEMENT

1 Disconnect the electrical supply.

2 Gain access to the controls area by removing the boiler front panel. (refer to frame 38), remove the boiler bottom panel (held with 2 screws) and lower the control panel.

3 Close off the isolating cocks of the CH circuit at the bottom of the boiler.

4 Release system pressure by opening the main circuit drainage cock.
Do not release CH pressure using the pressure relief valve. It may cause debris within the system to foul the valve.

5 Disconnect the capillary at the return manifold A.

6 Squeeze the tabs B to release the pressure gauge and remove it.

7 Fit the replacement gauge and reassemble in reverse order ensuring the spare coils are close to the gauge.

8 Close all drain cocks and open both isolating valves.

9 Fit the filling loop. Fill the boiler with water and pressure to bar (as appropriate). reconnect services.

10 After satisfactory test firing and removal of air from the system, remove the filling loop.

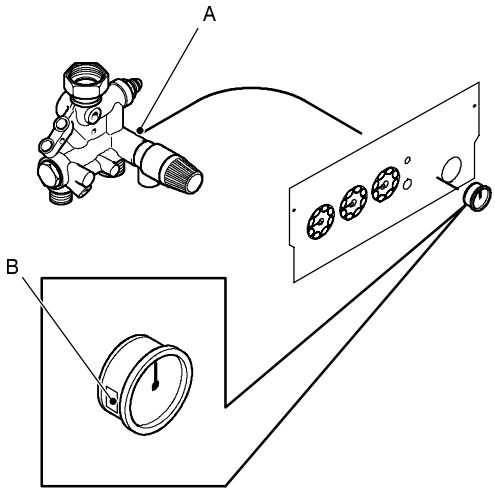

53 FAN REPLACEMENT

1 Disconnect the electrical supply.

2 Remove the inner case cover as explained in frame 38.

3 Disconnect the electrical harness from the fan.

4 Disconnect the pressure sensing pipe A from the fan noting which spigot on the fan venturi it was fitted to.

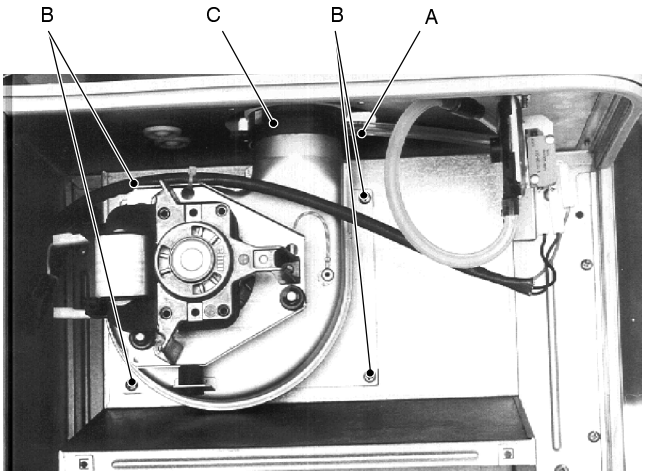

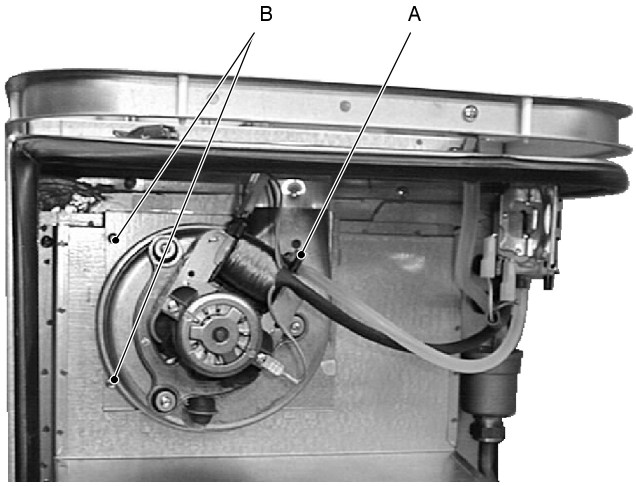

5 Undo the fixing screws B and remove the fan.

6 If the plastic venturi is fitted to the fan in position C, carefully remove it from the old fan and fit it to the replacement in the same position as before.

7 Fit the new fan and reassemble in reverse order.

8 Check the operation of the new fan.

54 AIR PRESSURE SWITCH REPLACEMENT

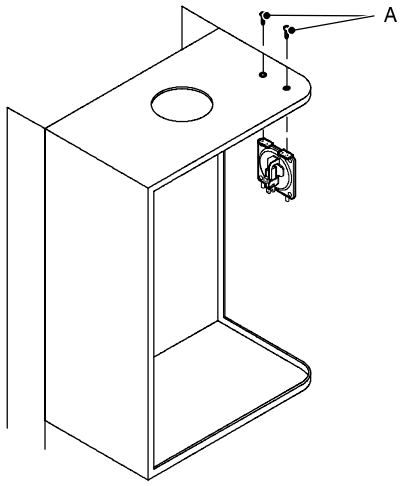

1 Disconnect the electrical supply.

2 Remove the inner case cover as explained in frame 38.

3 Disconnect the pressure sensing pipe from the –ve side of the air pressure switch.

4 Disconnect the electrical harness from the air pressure switch.

5 Undo the two screws A and remove the air pressure switch.

6 Replace the switch.

7 Reassemble in reverse order.

55 MAIN CONTROL PCB REPLACEMENT

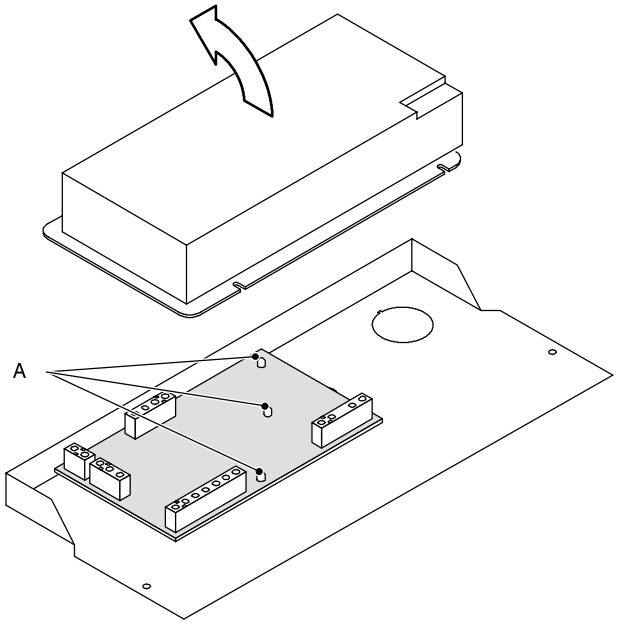

1 Disconnect the electrical supply.

2 Gain access to the controls area by removing the boiler front panel. (refer to frame 38), remove the boiler bottom panel (held with 2 screws) and lower the control panel.

3 Squeeze the protective cover sides to disengage from the front panel and remove it.

4 Disconnect all the connectors feeding the pcb to be changed.

5 Undo the nuts and remove the pcb.

6 Fit the new board on the control panel.

7 Replace all pcb connectors. Note that the connectors are made non–interchangeable due to the number of pins and position of the blanking plug.
If in doubt, refer to Pictorial wiring diagram (frame 29).

8 Replace the protective cover and the panels.

9 Power up and test both DHW and CH modes operation.

10 If gas pressure adjustment is necessary refer to frame 33.

56 PUMP REPLACEMENT

1 Disconnect the electrical supply.

2 Gain access to the controls area by removing the boiler front panel and the right hand panel (refer to frame 38), remove the boiler bottom panel (held with 2 screws) and lower the control panel.

3 Remove the right hand panel (refer to frame 38).

4 Close off the isolating cocks of the CH circuit at the bottom of the boiler.

5 Release system pressure by opening the main circuit drainage cock.
Do not release CH pressure using the pressure relief valve. It may cause debris within the system to foul the valve.

6 Undo the screw A, remove the cover of the terminal box.

7 Loosen the cable holder B and disconnect the power supply wiring from the terminal block C.

8 Completely loosen the inlet and outlet unions of the pump.

9 Remove the pump.

10 Fit in place the new pump replacing the sealing gaskets.

11 Make the electrical connections.

12 Close all drain cocks and open both isolating valves.

13 Fit the filling loop. Fill the boiler with water and pressurise the system (Refer to Table 7). Reconnect services and test the boiler for correct operation.

14 After satisfactory test firing and removal of air from the system, remove the filling loop.

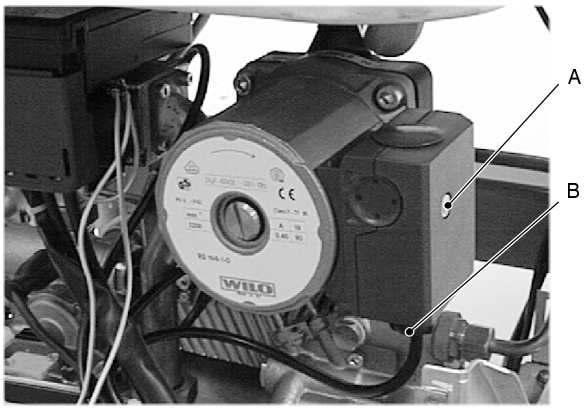

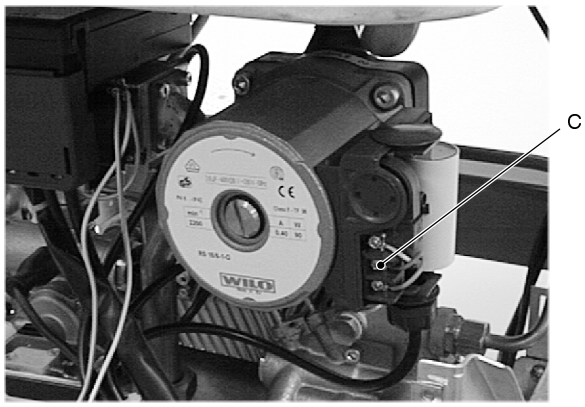

57 DHW FILTER AND FLOW LIMITER REPLACEMENT

1 Disconnect the electrical supply.

2 Gain access to the controls area by removing the boiler front panel. (refer to frame 38), remove the boiler bottom panel (held with 2 screws) and lower the control panel.

3 Close off the isolating cock of the DHW circuit at the bottom of the boiler.

4 Release the pressure of the DHW circuit by opening a hot tap.

5 Unscrew the plug A

6 Unscrew the part B from the plug A and remove the flow limiter C and the filter D.

7 Fit the flow limiter C putting its smaller diameter side towards the part B.

8 Fit the parts in reverse order.

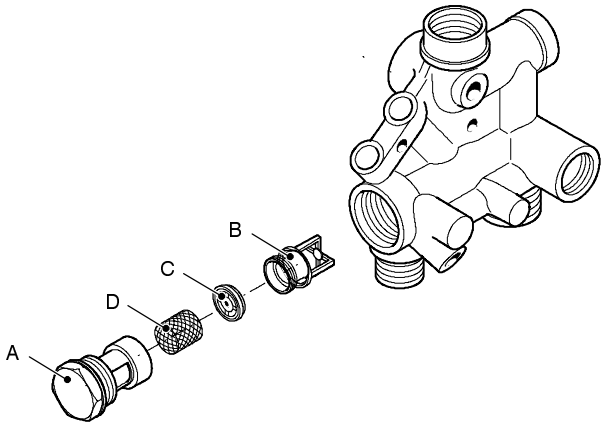

Two different sizes of flow limiter are available.

Table 8

Nominal flow rate (litres/min)	Colour
10	Blue
12	Red

58 PRIMARY HEAT EXCHANGER REPLACEMENT

1 Disconnect the electrical supply.

2 Remove the inner case cover as explained in frame 38.

3 Close off the isolating cocks of the CH circuit at the bottom of the boiler.

4 Release system pressure by opening the main circuit drainage cock.
Do not release CH pressure using the pressure relief valve. It may cause debris within the system to foul the valve.

5 Remove the combustion chamber panel as explained in frame 40 step 2.

6 Completely loosen the inlet and outlet unions A of the exchanger.

7 Extract the heat exchanger from the front.

8 Fit in place the new exchanger and re–connect the pipework using new gaskets and reassemble in reverse order.

9 Close all drain cocks and open both isolating valves.

10 Fit the filling loop. Fill the boiler with water and pressurise the system (Refer to Table 7). Reconnect services and test the boiler for correct operation.

11 After satisfactory test firing and removal of air from the system, remove the filling loop.

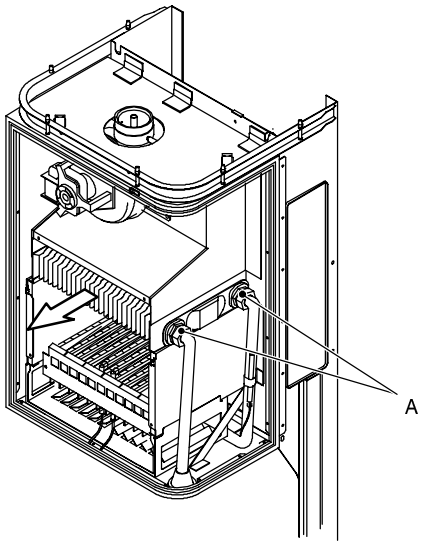

59 DHW HEAT EXCHANGER REPLACEMENT

1 Disconnect the electrical supply.

2 Gain access to the controls area by removing the boiler front panel. (refer to frame 38), remove the boiler bottom panel (held with 2 screws) and lower the control panel.

3 Close off the isolating cocks of the CH and DHW circuits at the bottom of the boiler.

4 Release system pressure by opening the main circuit drainage cock.
Do not release CH pressure using the pressure relief valve. It may cause debris within the system to foul the valve.

5 Release the pressure of the DHW circuit by opening a hot tap.

6 Completely unscrew the two screws A which hold the exchanger to the brass manifolds;

7 Move the exchanger towards the rear side of the boiler and extract it.

8 Fit in place the new heat exchanger replacing the four O–ring gaskets and reassemble in reverse order.

When reassembling the exchanger be sure to put the off centre location/securing pin B towards the left side of the boiler.

9 Open the DHW inlet isolating valve and purge the DHW circuit from air bubbles. Close the hot water tap.

10 Close all drain cocks and open both isolating valves.

11 Fit the filling loop. Fill the boiler with water and pressurise the system (Refer to Table 7). Reconnect services and test the boiler for correct operation.

12 Remove the filling loop.

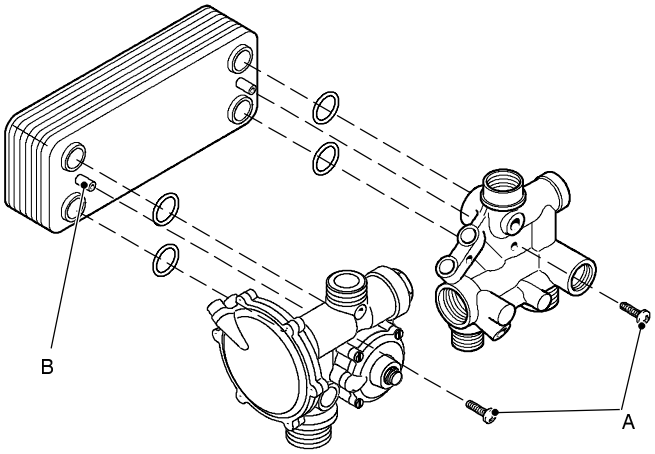

60 DHW / CH FLOW SWITCH REPLACEMENT

1 Disconnect the electrical supply.

2 Gain access to the controls area by removing the boiler front panel. (refer to frame 38), remove the boiler bottom panel (held with 2 screws) and lower the control panel.

3 To replace the DHW flow switch remove the fork A and move the switch box B towards the right.

To replace the CH flow switch remove the fork C and move the switch box D towards the front of the boiler.

4 Undo the three screws that close the switch box and disconnect the switch.

5 Replace with the new switch and reassemble in reverse order.

6 Power up and test DHW or CH modes operation as appropriate.

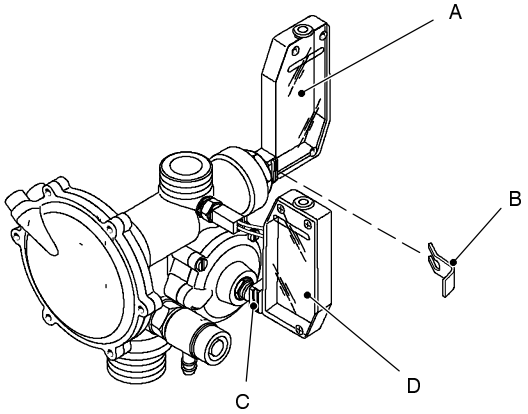

61 DIVERTER VALVE MEMBRANE REPLACEMENT

1 Disconnect the electrical supply.
2 Gain access to the controls area by removing the boiler front panel. (refer to frame 38), remove the boiler bottom panel (held with 2 screws) and lower the control panel.
3 Close off the isolating cock of the DHW circuit at the bottom of the boiler.
4 Release the pressure of the DHW circuit by opening a hot tap.
5 Remove the forks A and move away the pipes B.

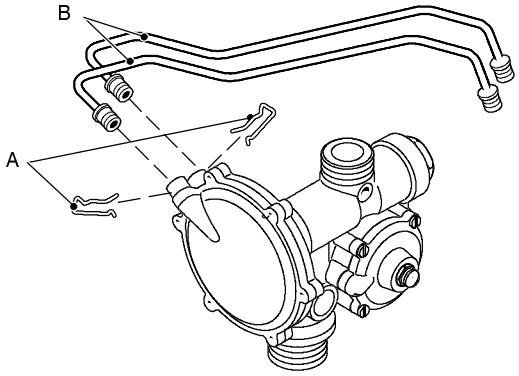

6 Loose the screws C and remove the hydraulic actuator.
7 Unscrew the six screws D, open the hydraulic actuator and remove the membrane E.
8 Fitting the new membrane, ensure to place its concave side towards the actuator plate F.
9 When fixing the actuator to the valve, fit the reference shaft G (indicated in the picture) in the seat of the valve.
10 Reassemble in reverse order.
11 Open the DHW inlet isolating valve and purge the DHW circuit from air bubbles. Close the hot water tap.
12 Test the boiler for proper operation.

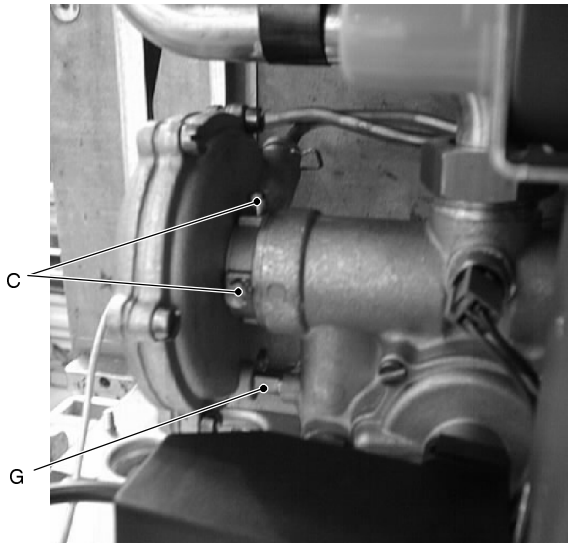

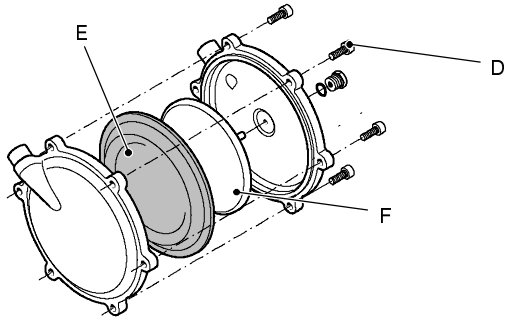

62 CH FLOW SWITCH MEMBRANE REPLACEMENT

1 Disconnect the electrical supply.
2 Gain access to the controls area by removing the boiler front panel. (refer to frame 38), remove the boiler bottom panel (held with 2 screws) and lower the control panel.
3 Close off the isolating cocks of the CH circuit at the bottom of the boiler.
4 Release system pressure by opening the main circuit drainage cock.
Do not release CH pressure using the pressure relief valve. It may cause debris within the system to foul the valve.
5 Remove the fork that holds the main circuit flow switch.
6 Unscrew the four screws A, open the hydraulic operator and remove the membrane B.
7 Assemble the new membrane proceeding in reverse order.
Assembling the membrane, ensure to place the concave side of the membrane towards the actuator plate C and locate the reference hole in the membrane over the pressure transfer nipple D.
8 Close all drain cocks and open both isolating valves.
9 Fit the filling loop. Fill the boiler with water and pressurise the system (Refer to Table 7). Reconnect services and test the boiler for correct operation.
10 Remove the filling loop.

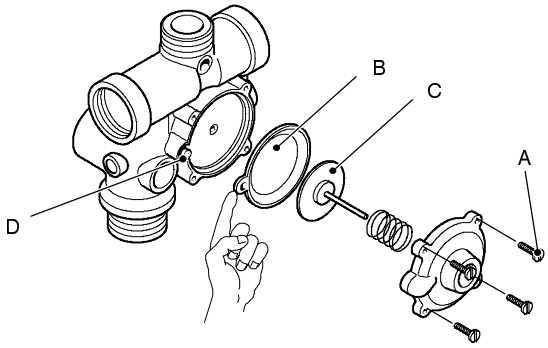

63 PROGRAMMER REPLACEMENT (if fitted)

1 Disconnect the electrical supply.

2 Gain access to the controls area by removing the boiler front panel. (refer to frame 38), remove the boiler bottom panel (held with 2 screws) and lower the control panel.

3 Disconnect the wiring at the programmer.

4 Remove the 3 screws A and spacers holding the programmer to the front fascia and withdraw the faulty programmer from the control panel.

5 Re – assemble in reverse orderusing a new programmer

6 Replace the panels and check the operation of the new programmer.

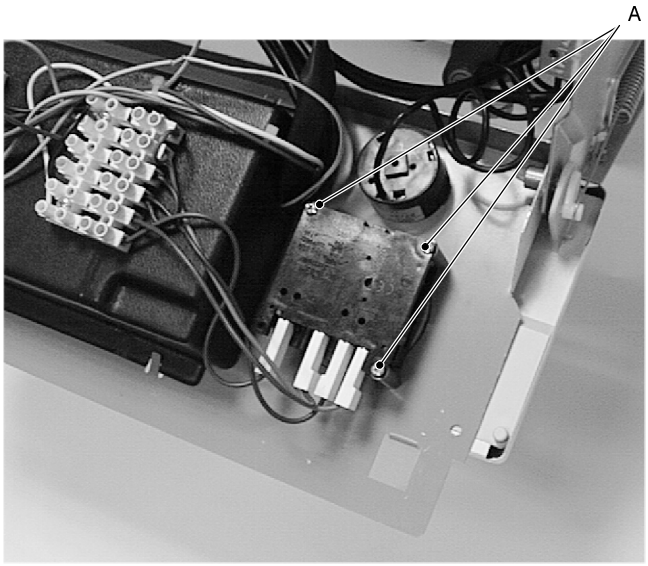

64 EXPANSION VESSEL REPLACEMENT

If the CH expansion vessel is faulty, there are 2 options:

A If it has a punctured diaphragm, but is otherwise leak free, than it can be left in place and a new vessel added to the system, external to the boiler, provided it is of adequate capacity and pre charge pressure.

B If there is at least 300 mm (12 “) clearance above the boiler, the expansion vessel can be changed without removing the boiler (rear exit flues will have to be disturbed). To gain access to the water connection of the expansion vessel it is necessary to remove the pump (see frame 56).

For option B, proceed as follows:

1 Disconnect the electrical supply.

2 Gain access to the controls area by removing the boiler front panel and the right hand panel (refer to frame 38), remove the boiler bottom panel (held with 2 screws) and lower the control panel.

3 Close off the isolating cocks of the CH circuit at the bottom of the boiler.

4 Release system pressure by opening the main circuit drainage cock. **Do not release CH pressure using the pressure relief valve. It may cause debris within the system to foul the valve.**

5 Remove the pump (see frame 56)

6 Undo the water connection of the expansion vessel.

7 Undo the bolt A and remove the expansion vessel

8 Reassemble in reverse order.

9 Close all drain cocks and open both isolating valves.

10 Fit the filling loop. Fill the boiler with water and pressurise the system (Refer to Table 7). Reconnect services and test the boiler for correct operation.

11 Remove the filling loop.

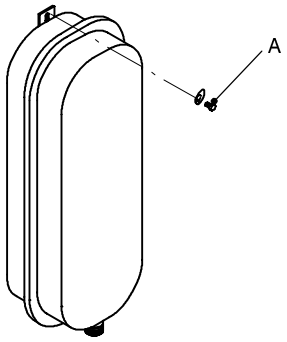

65 CENTRAL HEATING DRAIN COCK REPLACEMENT

1 Disconnect the electrical supply

2 Gain access to the control area by removing the boiler front panel (Refer to frame 38), remove the boiler bottom panel (held with 2 screws) and lower the control panel.

3 Close off the isolating cocks of the CH circuit and DHW circuit at the bottom of the boiler.

4 Release the CH system pressure by opening the main circuit drainage cock. Release the pressure of the DHW circuit by opening a hot tap. **Do not release the CH pressure using the pressure relief valve. It may cause debris within the system to foul the valve.**

5 Disconnect the leads from the thermistor.

6 Remove the CH flow switch (refer to frame 60).

7 Remove the hydraulic actuaor (refer to frame 61).

8 Remove the CH flow switch hydraulic operator assembly (refer to frame 62).

9 Carefully unscrew the pressure transfer nipple (finger tight).

10 Remove the central heating drain cock from the diverter valve body.

11 Assemble in the reverse order taking care to re – fit the transfer nipple.

12 Close all drain cocks and hot taps, open all isolating valves.

13 Fit the filling loop. Fill the boiler with water and pressurise the system (refer to table). Reconnect services and test the boiler for correct operation.

14 Remove the filling loop.

66 IGNITION FAULT FINDING

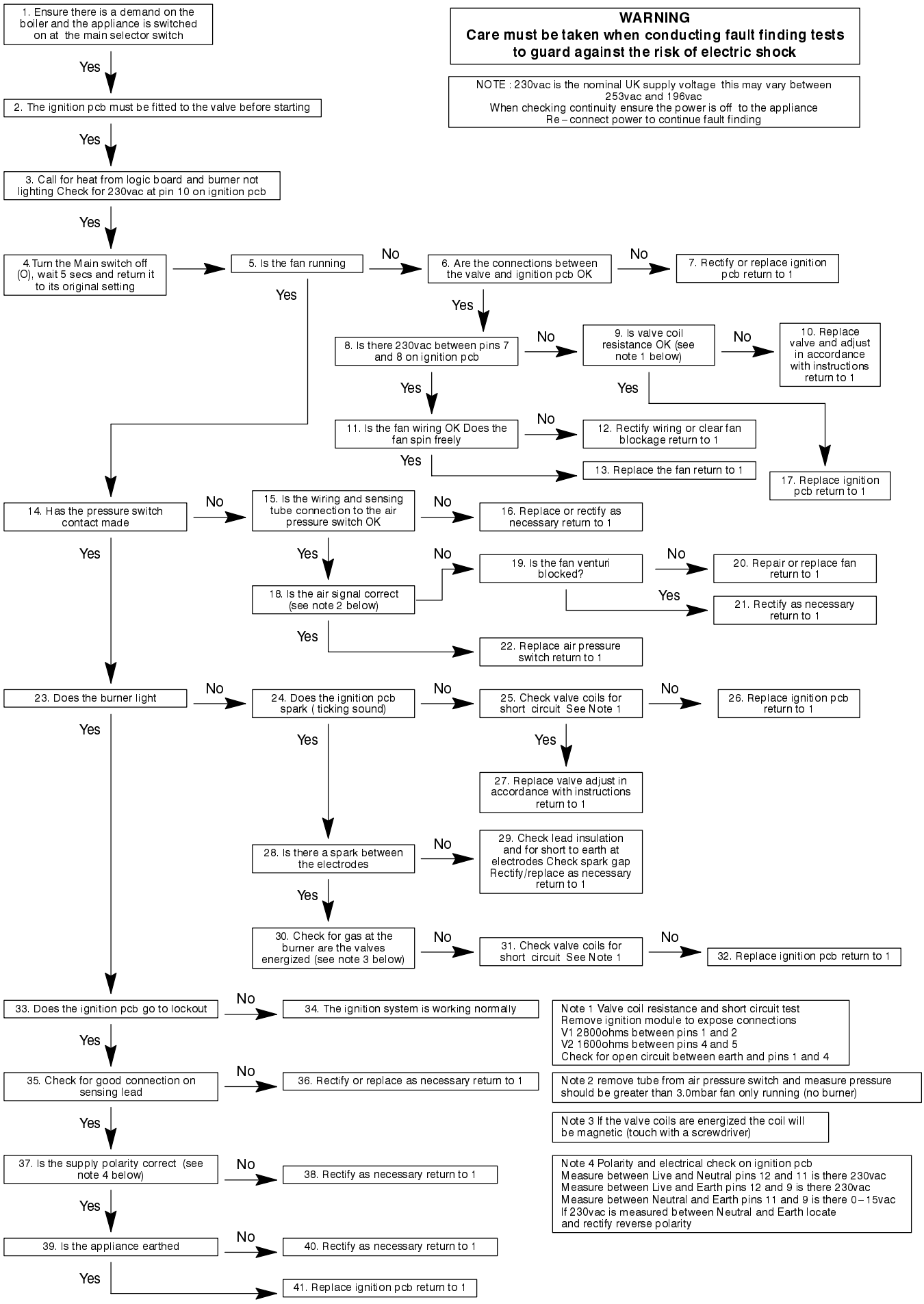

67 HOT WATER MODE FAULT FINDING

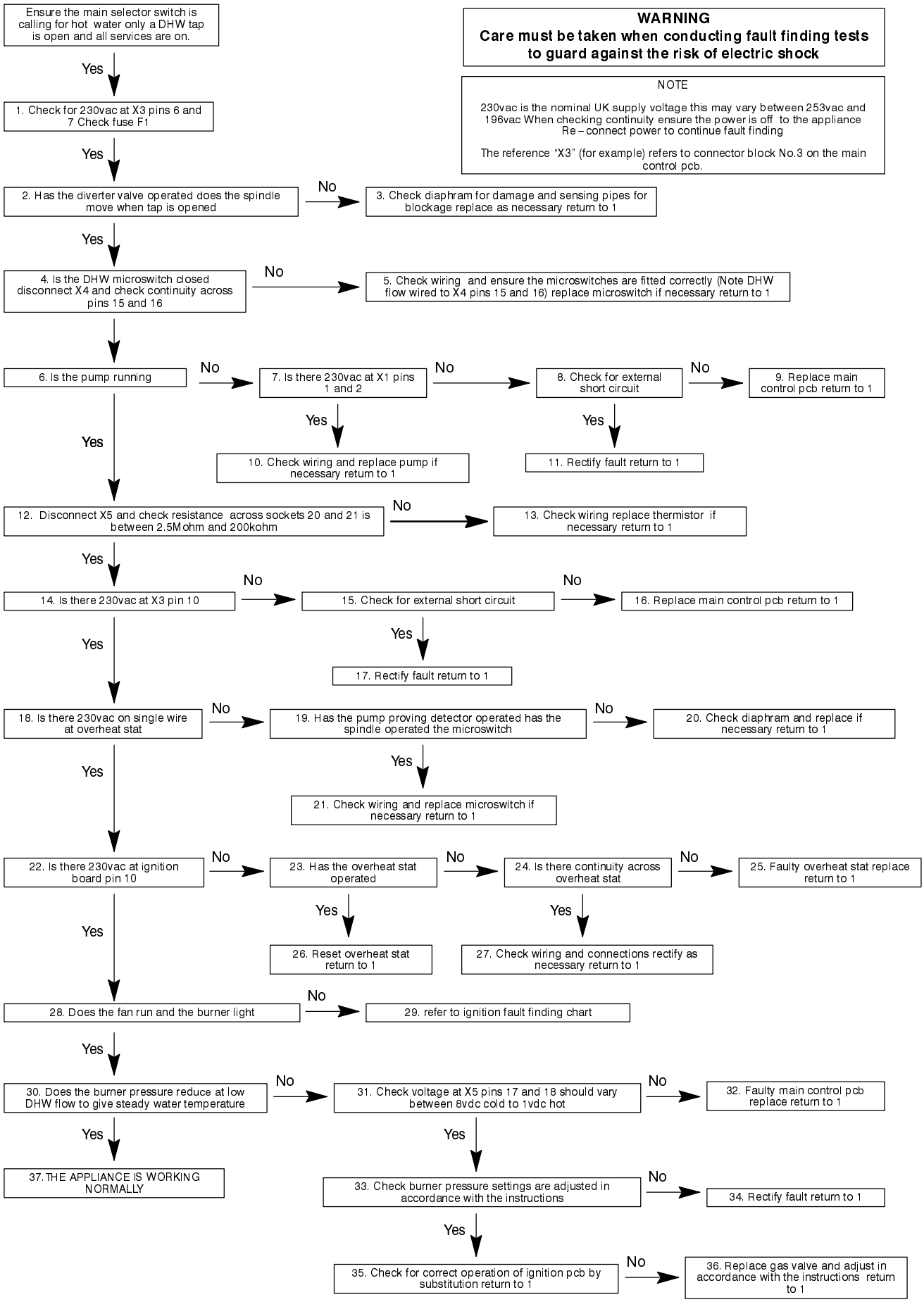

68 HEATING MODE FAULT FINDING

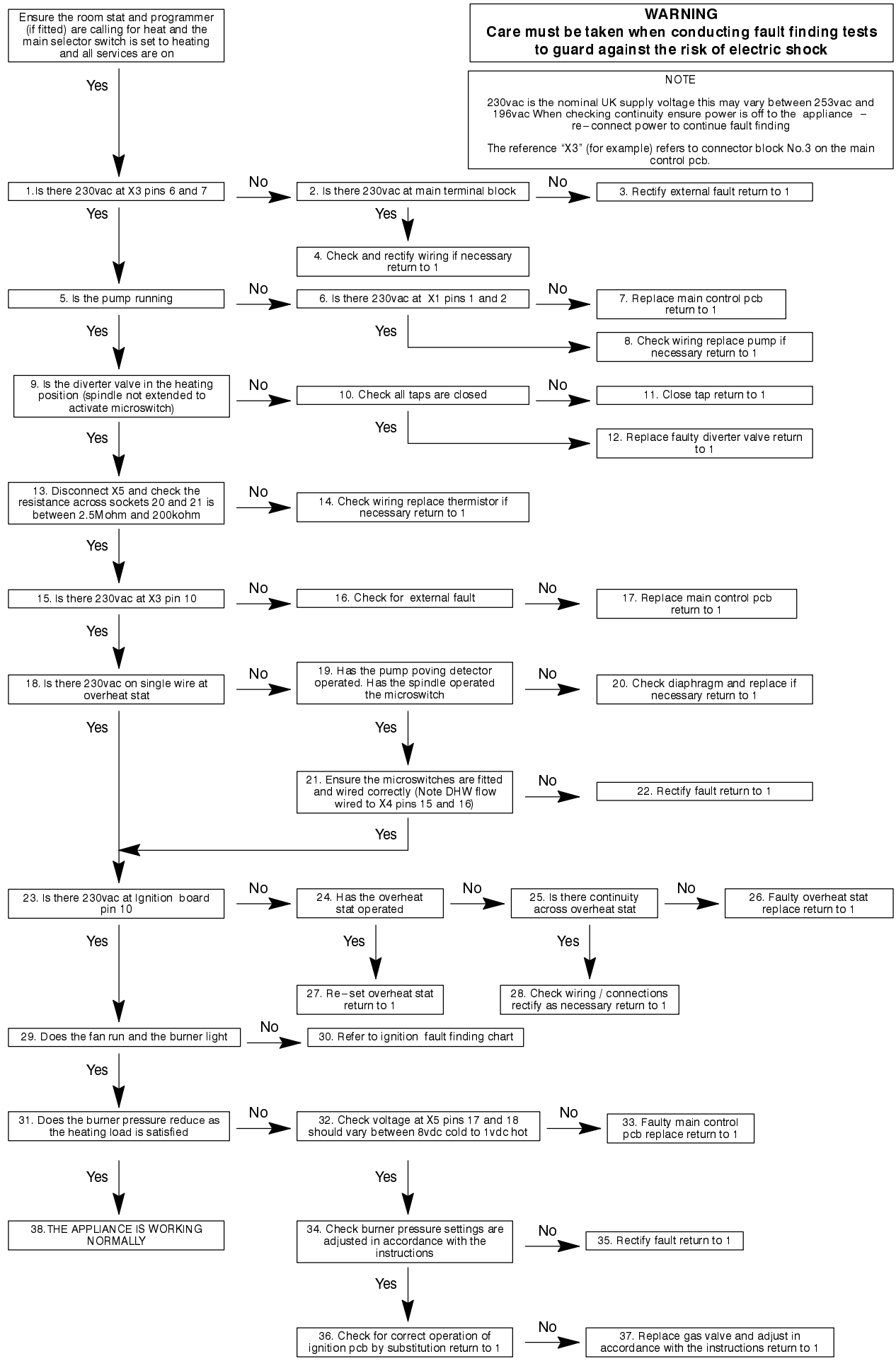

The following are parts commonly required as replacements, due to damage or expendability. The failure or absence is likely to affect the safety and/or performance of this appliance.

The list is estracted from the British Gas List of Parts which contains all available spare parts.

The full list is held by British Gas, **Caradon Plumbing Ltd.** distributors and merchants.

When ordering spares please quote:

1 Boiler model (see Data Plate)
2 Appliance G.C. number (see Data Plate)
3 Description
4 Quantity
5 Product No.

Key No.	G.C. No.	DESCRIPTION	No. Off/Boiler	Product No.
1	E01 – 217	Dhw pressure switch membrane	1	075406
2	E01 – 211	Filter and pressure reducing valve kit	1	075408
3	379 – 085	Safety valve 1/2”	1	075413
4	169 – 141	1/2” flat gasket	5	075414
5	169 – 033	3/4” flat gasket	14	075415
6	169 – 032	1” flat gasket	2	075416
7	E00 – 684	Microswitch kit	2	075419
8	E00 – 688	Ch pressure switch membrane	1	075421
9	173 – 148	Main burner ***C80FF***	1	075427
	173 – 149	Main burner ***C95FF***	1	075535
10	169 – 068	Main burner injector + gasket ***C80FF***	12	075428
	169 – 069	Main burner injector + gasket ***C95FF***	14	075692
11	E23 – 771	Ignition electrode left	1	075429
12	E23 – 773	Detection electrode	1	075430
13	E23 – 772	Ignition electrode right	1	075431
14	E23 – 778	Ignition pcb housed	1	170815
15	E23 – 781	Logic pcb	1	075434
16	379 – 086	Overheat thermostat	1	075435
17	E23 – 798	Fan assembly ***C80FF***	1	075441
		Fan assembly ***C95FF***	1	170813
17A	173 – 142	Fan assembly ***C95FF*** – square outlet	1	075536
18	169 – 127	Air pressure switch	1	075442
19	169 – 106	Sightglass gasket (square)	1	075449
20	169 – 107	Sightglass (square)	1	075448
20A		Sight glass with gasket (round)	1	170977
21		Press sw/air vent/gas valve tubes kit	1 EACH	075450
22	E23 – 804	Jacket LH side panel	1	075458
23		Jacket front panel	1	170824
24	E23 – 808	Jacket RH side panel	1	075459
25	E23 – 799	Inner casing seal kit	1	075446
26	E01 – 204	Dhw heat exchanger ***C80FF*** including O – rings	1	075460
	E01 – 205	Dhw heat exchanger ***C95FF*** including O – rings	1	075540
27	E01 – 201	Dhw pressure switch pipes	1 EACH	075461
28		Controls door including pivot, washers and LIP	1	170823
29	E24 – 564	Pressure gauge with gasket	1	170820
30		By – pass pipe including O – rings	1	075462
31	E23 – 758	Temperature probe (ntc)	1	075417
32		CH pump Wilo NFHUL 15/5 including gaskets	1	170806
33	169 – 061	Main heat exchanger ***C80FF*** including gaskets	1	075465
	169 – 062	Main heat exchanger ***C95FF*** including gaskets	1	079878
34		Gas valve honeywell cvi – m including gaskets	1	075466
35		Automatic air vent 1/2” including gaskets	1	075468

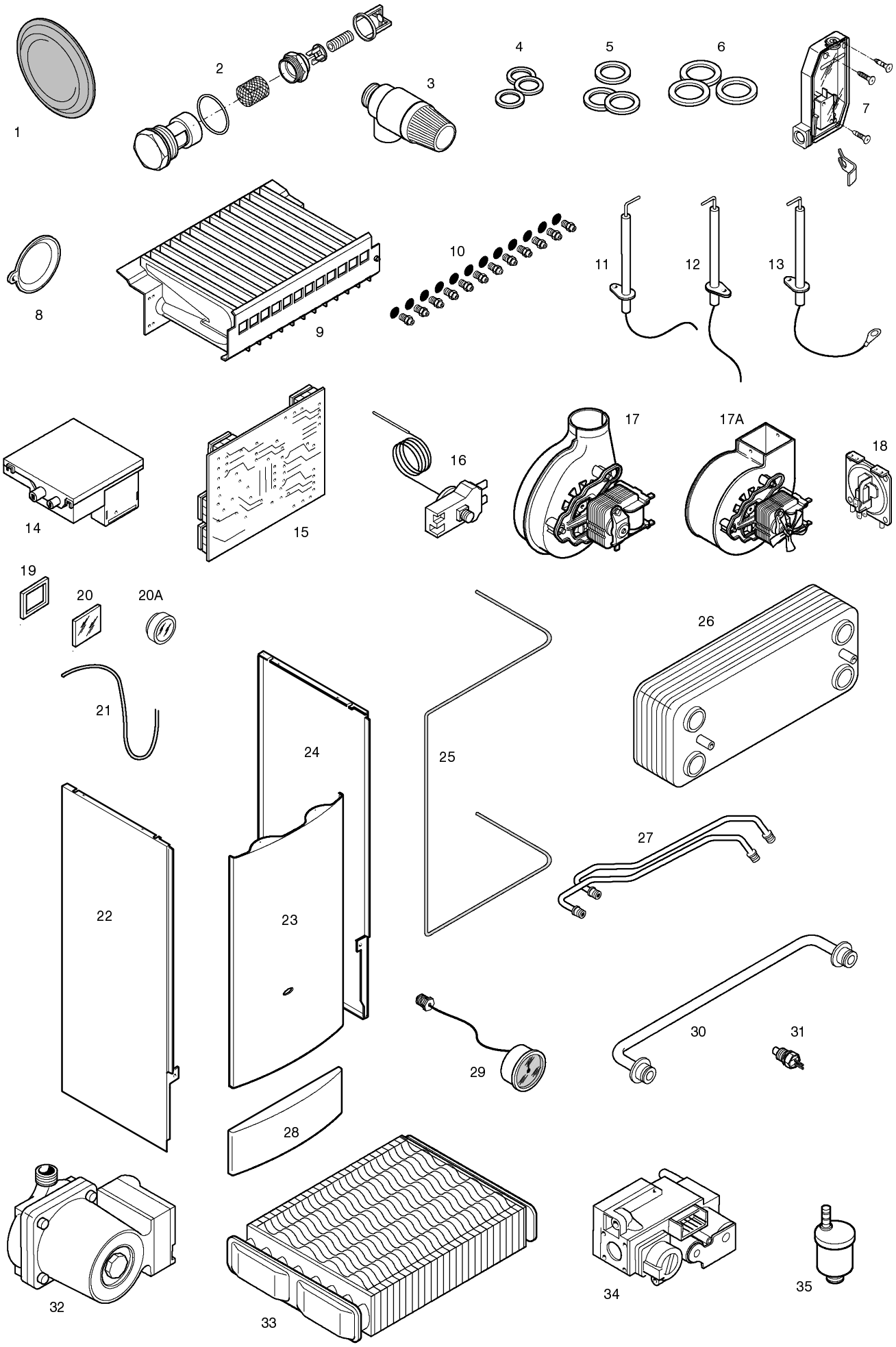
1
2
3
4
5
6
7
8
9
10
11
12
13
14
15
16
17
17A
18
19
20
20A
21
22
23
24
25
26
27
28
29
30
31
32
33
34
35

benchmark™

the code of practoce for the installation commissioning & servicing of central heatsystems

Your feedback

and your chance to win a free boiler

At Ideal we've been leaders in the design and engineering of robust and reliable boilers for over 90 years. We want to continue as leaders by listening to your suggestions for how to improve our boilers and our service.
We'll be giving away a free boiler for the five best ideas every year (to be selected by our Technical Director). please complete this form using extra sheets if required and post it or fax it to us on 01482 498699.

Boiler details

Model / Size *(e.g. Classic RS 230, Mexico CF 3/60 etc. Details on control panel door)*

Date of installation

Installer details

Name

Address

Post Code

Telephone *(Please include STD code)*

How I would improve this boiler:

My general comments for Ideal:

Caradon
Plumbing Solutions

Ideal Care Helpline: 01482 498663

Further information

If you would like information about Ideal Boilers please complete this sheet and fax it to us on 01482 498699 or post it to Caradon Plumbing Solutions PO Box 103, National Avenue, Kingston upon Hull, HU5 4JN.

Name

Address

Post Code

Telephone *(Please include STD code)*

General information required

- ☐ *Please send me details of Ideal training Courses.*
- ☐ *Please arrange for a technical representative to contact me.*
- ☐ *Please arrange for me to join an Ideal factory tour.*

Range guides required

- ☐ *The Ideal Guide: a specifier's and installer's introduction to the Ideal domestic boiler range.*
- ☐ *The Ideal Householders Guide: to assist the installer when presenting to his/her customers (specify products).*

Technical manuals required

- ☐ *The Ideal Classic wall hung boiler*
- ☐ *The Ideal Classic System wall hung boiler*
- ☐ *The Ideal Classic LX Deluxe wall hung boiler*
- ☐ *The Ideal Mexico floor standing boiler*
- ☐ *The Ideal Minimiser heat–saving boiler*
- ☐ *The Ideal* ***C80FF*** *&* ***C95FF*** *boilers*
- ☐ *The Ideal Response combi boiler*
- ☐ *The Ideal Response SE super efficiency combi boiler*
- ☐ *The Ideal Systemiser SE super efficiency system boiler*
- ☐ *The Ideal Concord high output boiler*
- ☐ *The Ideal Buccaneer oil fired boiler*

Caradon Plumbing Solutions

PO Box 103, National Avenue, Kingston upon Hull, HU5 4JN. Telephone: 01482 492251 Fax: 01482 448858

Ideal Care Helpline: 01482 498663

17962.0815.0 0105

155552 A0