Classic Combi FF 280

Installation & Servicing

Wall Mounted, Fanned, Balanced Flue Gas Boilers

Natural Gas Models Only

Classic Combi **G.C. Appliance No.**

FF 280 .....47 415 08

CAUTION.

To avoid the possibility of injury during the installation and servicing of this appliance, care should be taken when handling edges of sheet components.

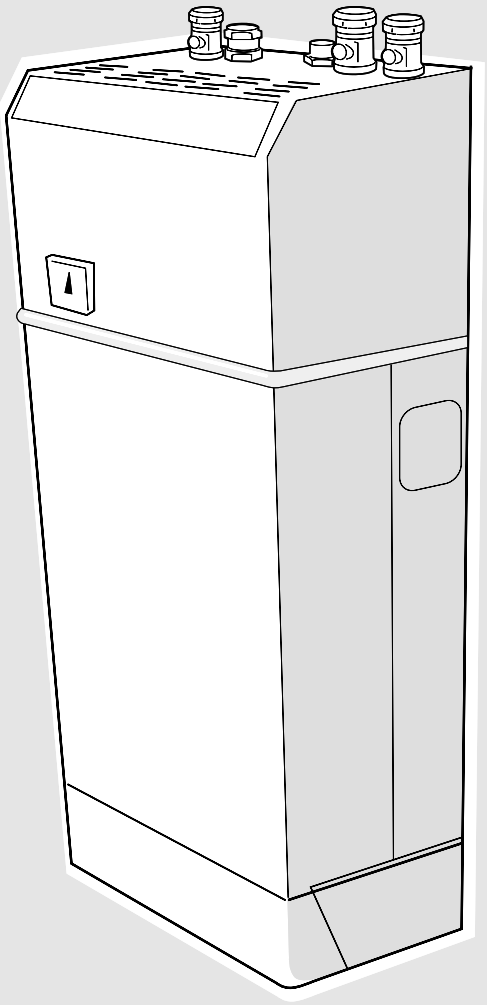

NOTE TO THE INSTALLER: LEAVE THESE INSTRUCTIONS ADJACENT TO THE GAS METER

Ideal BOILERS

CONTENTS

Air Supply 7

Boiler Clearances 6

Boiler Exploded View 46

Burner Exploded View 47

Control Box Exploded View 47

Electrical Connections 25

Electrical Regulations 8

Extension Ducts - Fitting 21

External Control 27

Fault Finding 48

Flueing 7
- **Rear Installation** 13
- **Side Installation** 17

Gas Safety (Installation & Use) Regulations, 1994 5

Gas Supply 5

Health & Safety Document No 635 5

Initial Lighting 29

Installation 11

Mandatory Requirements 5

Pump 24

Servicing 32

Short List of Parts 54

Spares Replacement 35

Terminal Guards 7

Thermostatic Radiator Valves 8

Water Circuit Diagrams 4

Water Connections 24

Water Requirements 7

INTRODUCTION

The new Classic Combi FF280 is a cast iron, balanced flue, fanned gas boiler.

Central heating (CH) output is spot rated at 23.4 kW (80 000 Btu/h) with on/off thermostatic control and is suitable for use with heating loads down to 4.4 kW (15 000 Btu/h).

Maximum instantaneous domestic hot water (DHW) output is also 23.4kW (80 000 Btu/h).

The boiler is designed for use with fully pumped sealed water systems but can also be connected to open water systems if required.

The boiler casing is of white enamelled mild steel with a removable controls pod. A drop-down door gives access to the control box.

Note. *This boiler can only be used on fully pumped systems.*

The boiler is supplied fully assembled, with a domestic hot water calorifier, diverter valve, circulating pump, pressure gauge, safety valve and CH expansion vessel (contained in a module on top of the boiler).

Fixed temperature CH and DHW controls are fitted and the boiler incorporates a DHW 'preheat' facility.

The module also includes a CH thermostatic valve and bypass. *No external bypass is required.*

The domestic hot water and central heating pipe connections may be made at the top or bottom of the boiler as required.

The boiler is supplied with a standard flue kit suitable for rear or side outlet applications up to 600mm (23 1/2"). Optional extra extension ducts up to 3m (118"), rear or side outlet, are available.

Note. *A Vertex Flue Kit with a side outlet may be used - see the Vertex Flue Kit Installation Instructions for details.*

OPERATION

Domestic Hot Water (DHW)

With no call for either DHW or CH the boiler will periodically fire at low gas rate for a few seconds, in order to maintain the DHW calorifier in a preheated condition.

Note. *The DHW 'preheat' operates 24 hours a day unless an external programmer is fitted, when it can be timed.*

When there is demand for DHW the boiler fires at full gas rate, the diverter valve remains de-energised and the full output from the boiler is directed to the DHW calorifier, providing a maximum DHW draw-off of 9.6 l/m (2.1 gpm) at 35° C. temperature rise.

At DHW draw-off rates below approximately 6 l/m (1.3 gpm) the boiler reduces to low gas rate when the DHW temperature reaches about 60°C and maintains the low draw-off temperature between 50°C and 75°C. When the demand for DHW is satisfied the 'preheat' cycle resumes, unless there is a CH demand, which takes priority.

Central Heating (CH)

When there is demand for CH, the boiler fires at full output, to supply the demand. The CH circuit within the module incorporates a thermostatic valve which operates to maintain a high boiler temperature during periods of cold CH start-up, necessary for the instantaneous delivery of DHW , if there is a demand at this time. Water is not released to the system until a temperature of 60°C. is reached within the boiler.

Refer also to 'Boiler Water Circuit Diagrams'.

Table 1 - General Data

Boiler size			**FF 280**
Gas supply connection			Rc 1/2 (1/2" BSP/t)
Inlet connection	Domestic Hot Water		15mm compression union
Outlet connection	Domestic Hot Water		15mm compression union
Flow connection	Central Heating		22mm compression union
Return connection	Central Heating		22mm compression union
Safety valve drain pipe connection			15mm copper (female)
Flue terminal diameter		mm (in.)	100 (4)
Maximum working pressure (sealed systems)		bar (psi)	2.5 (36.3)
Maximum static water head		m (ft.)	25 (82)
Minimum static water head - open water systems		m (ft.)	1.5 (5.0)
Maximum domestic hot water inlet pressure		bar (psi)	10.0 (145.0)
Minimum domestic hot water inlet pressure		bar (psi)	0.9 (13.1)
Electrical supply			230 V ~ 50 Hz
Maximum power consumption			160W
Fuse rating			External; 3A Internal; 2A (F)
Water content	Central Heating	litre (gal.)	4.65 (1.0)
	Domestic Hot Water	litre (gal.)	0.55 (0.12)
Dry weight (total)		kg (lb)	78.7 (173)
Maximum installation weight		kg (lb)	Combi module - 11.4 (25.1) Boiler module - 52.6 (116)
Boiler casing size	Height	mm (in.)	1045 (41 1/4)
	Width	mm (in.)	380 (15.0)
	Depth	mm (in.)	Top water connections - 300 (11 3/4) Bottom water connections - 345 (13 1/2)

Table 2 - Performance Data - Central Heating

Central Heating		**Maximum**
Burner setting pressure (hot)	mbar (in.w.g.)	16.0 (6.4)
Output	kW (Btu/h)	23.4 (80 000)
Input	kW (Btu/h)	29.3 (100 000)
Gas consumption (hot)	l/s (ft^3/h)	0.76 (96.3)

Table 3 - Performance Data - Domestic Hot Water

Domestic Hot Water		**Maximum**
Burner setting pressure (hot)	mbar (in.w.g.)	16.0 (6.4)
DHW output	kW (Btu/h)	23.4 (80 000)
DHW input	kW (Btu/h)	29.3 (100 000)
Gas consumption (hot)	l/s (ft^3/h)	0.76 (96.3)
Domestic hot water flow rate at 35°C. temp. rise	l/m (gpm)	9.6 (2.1)

Note. *Gas consumption is calculated using a calorific value of 38.7 MJ/m^3 (1038 Btu/ft^3)*

1 BOILER WATER CIRCUIT DIAGRAMS

Domestic Hot Water (D.H.W.) Circuit

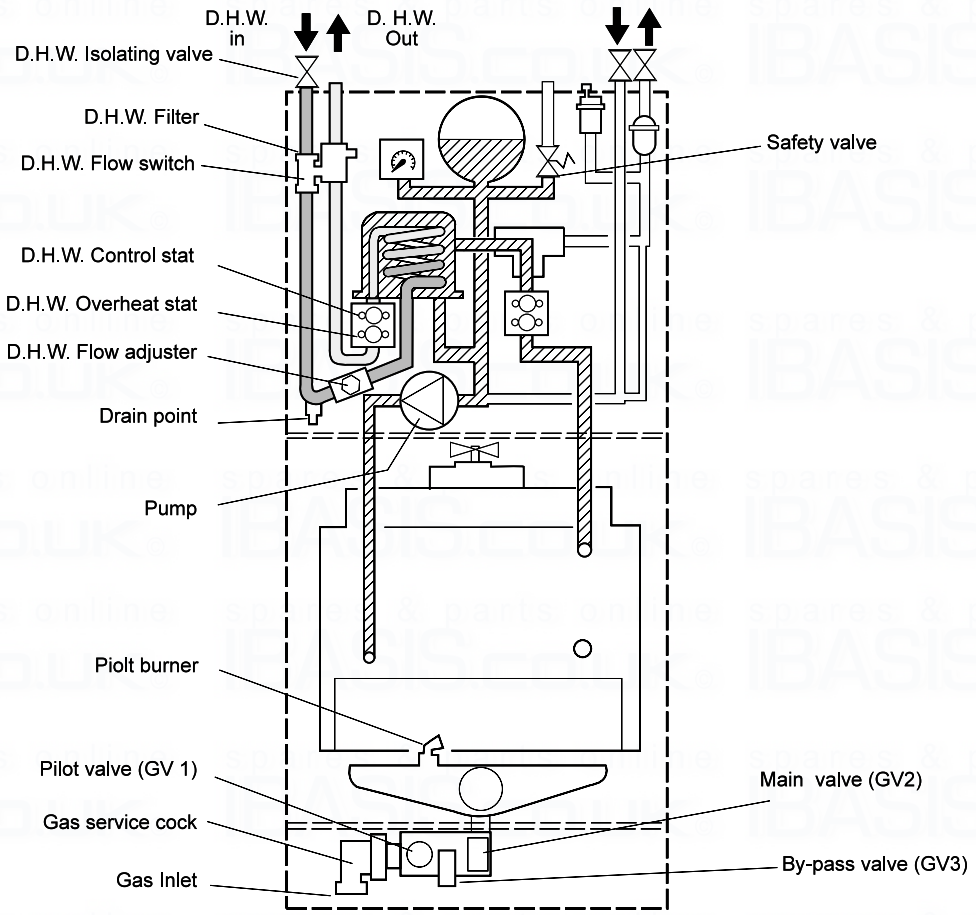

Central Heating (C. H.) Water Circuit

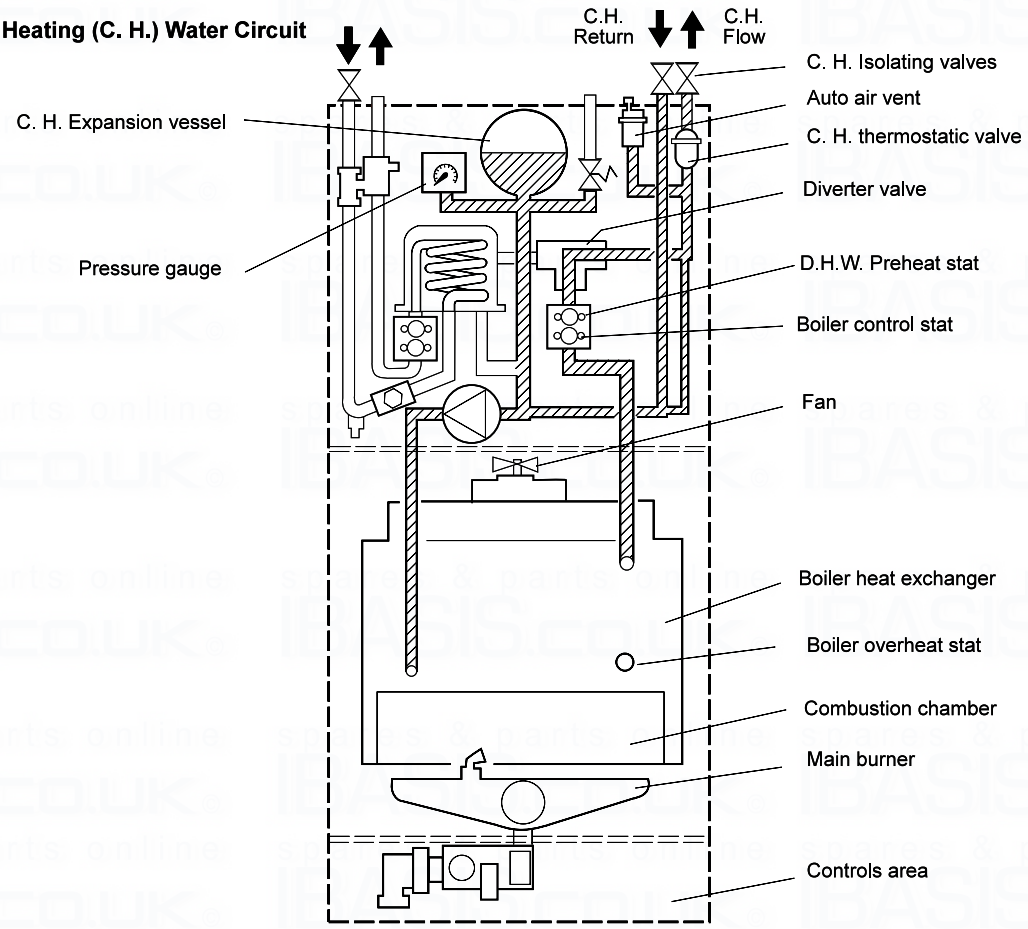

OPTIONAL EXTRA KITS

A Programmer Kit

A 90° Flue Elbow Kit

Extension ducts up to 3 m (118").

GAS SAFETY (INSTALLATION AND USE) REGULATIONS, 1994.

It is law that **all** gas appliances are installed by a CORGI registered installer (identified by ❀) in accordance with the above regulations. Failure to install appliances correctly could lead to prosecution. It is in your own interest, and that of safety, to ensure the law is complied with.

The installation of the boiler MUST also be in accordance with the latest I.E.E Wiring Regulations, local building regulations, bylaws of the local water authority, the Building Regulations and Building Standards (Scotland) and any relevant requirements of the local authority.

Detailed recommendations are contained in the following British Standard Codes of Practice:

BS.6891	Low pressure installation pipes.
BS.6798	Installation of gas fired hot water boilers of rated input not exceeding 60 kW.
BS.5449	Forced circulation hot water systems.
BS.5546	Installation of gas hot water supplies for domestic purposes (2nd Family Gases).
BS.5440:1	Flues for gas appliances of rated input not exceeding 60 kW.
BS.5440:2	Ventilation for gas appliances of rated input not exceeding 60 kW.
BS.7593:1992	Treatment of water in domestic hot water central heating systems

HEALTH & SAFETY DOCUMENT NO 635

The Electricity at Work Regulations, 1989.

Manufacturer's notes must NOT be taken in any way as overriding statutory obligations.

IMPORTANT.

This appliance is certificated by the British Standards Institution for safety and performance. It is, therefore, important that no external control devices, e.g. flue dampers, economisers etc., are directly connected to this appliance - unless covered by these Installation and Servicing Instructions or otherwise recommended by **Caradon Ideal Ltd.** in writing.
If in doubt please enquire.

Any direct connection of a control device not approved by **Caradon Ideal Ltd.**, could invalidate the BSI Certification and the normal appliance warranty. It could also infringe the Gas Safety Regulations and the above regulations.

LOCATION OF BOILER

The boiler must be installed on a flat and vertical wall, capable of adequately supporting the weight of the boiler and any ancillary equipment.

The boiler may be fitted on a combustible wall. Insulation between the wall and the boiler is not necessary, unless required by the local authority. **The boiler must not be fitted outside.**

Timber Framed Buildings
If the boiler is to be fitted in a timber framed building it should be fitted in accordance with the British Gas publication 'Guide for Gas Installations in Timber Frame Housing', reference DM2.

Bathrooms
The boiler may be installed in any room or internal space, although particular attention is drawn to the requirements of the current I.E.E. (BS. 7671) Wiring Regulations and, in Scotland, the electrical provisions of the building regulations applicable in Scotland with respect to the installation of the boiler in a room or internal space containing a bath or shower.

Where a room-sealed appliance is installed in a room containing a bath or shower then the appliance and any electrical switch or appliance control utilising mains electricity should be so situated that it cannot be touched by a person using the bath or shower.

Where installation will be in an unusual location special procedures may be necessary and BS.6798 gives detailed guidance on this aspect.

Compartment Installations
A compartment used to enclose the boiler should be designed and constructed specially for this purpose.
An existing cupboard or compartment may be used, provided that it is modified for the purpose.

In both cases details of essential features of cupboard / compartment design, including airing cupboard installation, are to conform to the following:

- BS. 6798.
- The position selected for installation MUST allow adequate space for servicing in front of the boiler and for air circulation around the boiler - see section on 'Air Supply'.
- For the minimum clearances required for safety and subsequent service see the wall mounting template and Frame 2. In addition, sufficient space may be required to allow lifting access to the wall mounting plate.

GAS SUPPLY

The local gas supplier should be consulted, at the installation planning stage, in order to establish the availability of an adequate supply of gas. An existing service pipe must NOT be used without prior consultation with the local gas supplier.

A gas meter can only be connected by the local gas supplier or by a local regional contractor.

An existing meter should be checked, preferably by the gas supplier, to ensure that the meter is adequate to deal with the rate of gas supply required. A MINIMUM pressure of 20mbar MUST be available at the boiler inlet, with the boiler operating.

Installation pipes MUST be fitted in accordance with BS. 6891. Pipework from the meter to the boiler MUST be of an adequate size.

The complete installation MUST be tested for gas soundness and purged as described in the above code.

2 BOILER DIMENSIONS / SERVICES

LEGEND

1. DHW inlet
2. DHW outlet
3. Safety valve drain
4. CH return
5. CH flow

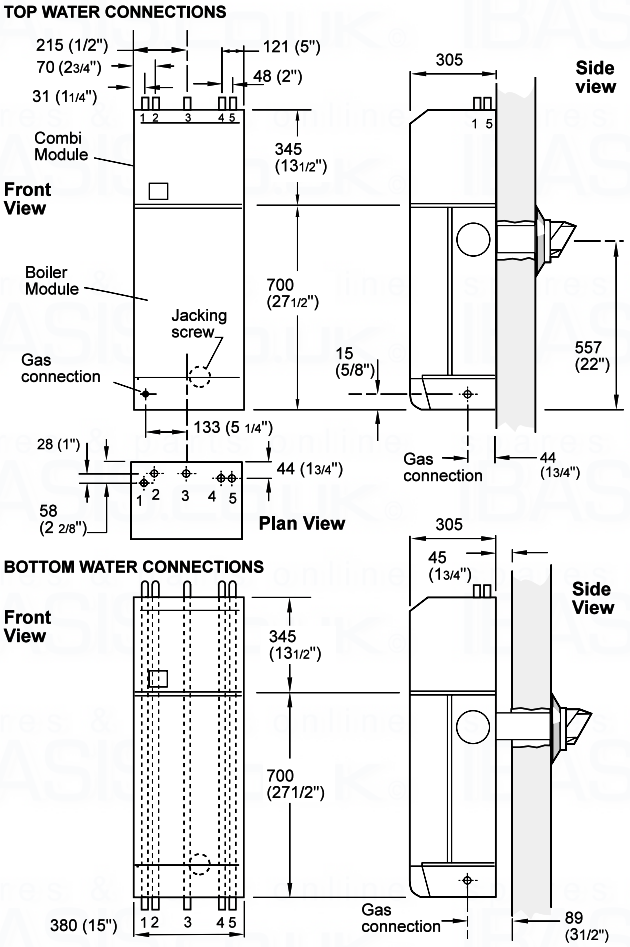

BOILER CLEARANCES

The following minimum clearances must be maintained for operation and servicing (see diagram).

Additional space will be required for installation, depending upon site conditions.

Dimension	Side Flue	Rear Flue
A	425mm	390mm
B	25mm flue side 40mm non-flue side	5mm both sides

Side Flue only

Provided that the flue hole is cut accurately, e.g. with a core drill, the flue can be installed from inside the building, up to 610mm (24") but, with flue lengths greater than the width of the boiler, the space in which the boiler is to be installed must be at least equal to the flue length plus the length of the terminal grille.

Installation from inside ONLY

If a core boring tool is to be used inside the building the space in which the boiler is to be installed must be at least wide enough to accommodate the tool.

All installations

Once the boiler has been installed, the side clearances may be reduced to 5mm.

Front clearance; 450mm (17 3/4") from the front of the boiler casing. Minimum front clearance when built in to cupboard is 75mm (3")

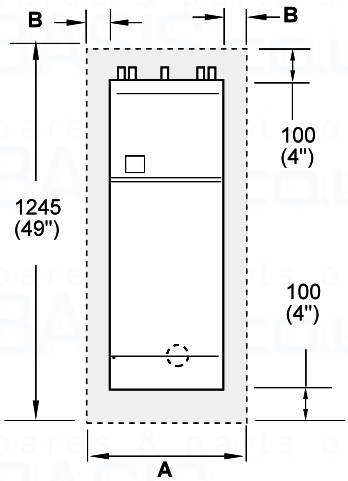

3 DETERMINING THE FLUE LENGTH

It is MOST important that the boiler is installed in a vertical position.

Dimension **X:** Wall thickness (top water connections)
or
X plus 45mm (bottom water connections)

Dimension **Y:** Wall thickness plus boiler spacing

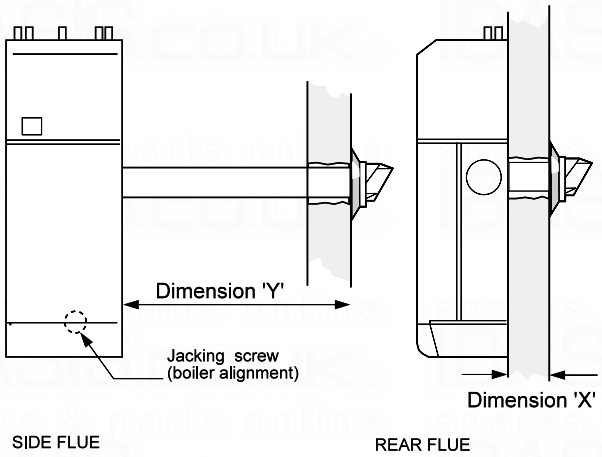

All dimensions in mm (in.)

IMPORTANT. The direction of the water connections, i.e. to the top or bottom of the boiler, must be decided BEFORE determining the flue length and position.

FLUE KITS

Pack B: supplied as standard.

Pack D: optional extension kit for side flue or rear flue outlet. Refer to 'Flue Extension Ducts'

1. A maximum of 2 extension ducts (plus the standard flue duct) may be used together.
2. Flue extensions of greater than 1m (39") should be supported with the bracket provided. If the stand-off brackets have been used it is necessary, in order to keep the flue aligned, to use the spacer bracket with the support bracket.

Flue length	Accessories	Product no.
Up to 600	B pack 1 off	111 492
600 to 1800	B pack 1 off + D pack 1 off	111 492 + 111 493
1800 to 3000	B pack 1 off + D pack 2 off	111 492 + 111 493, 2 off

FLUE INSTALLATION

The flue must be installed in accordance with the recommendations of BS. 5440:1.

The following notes are intended for general guidance:

1. The boiler MUST be installed so that the terminal is exposed to external air.

2. It is important that the position of the terminal allows the free passage of air across it at all times.

3. Minimum acceptable spacing from the terminal to obstructions and ventilation openings are specified in Table 4.

4. Where the lowest part of the terminal is fitted less than 2m (6'6") above a balcony, above ground or above a flat roof to which people have access then the terminal MUST be protected by a purpose designed guard. The minimum spacing in Table 4; Nos. 2, 3, 4, 5 and 6 would be 75mm in order to allow a terminal guard to be fitted.

   Terminals guards are available from:

   Tower Flue Components Ltd.,
   Vale Rise, Tonbridge, Kent TN9 1TB

   Telephone No. 01732 351 555

   Ensure that the guard is fitted centrally.

5. Where the terminal is fitted within 1000mm (39 1/2") of a plastic or painted gutter or 500mm (19 1/2") of painted eaves then an aluminium shield at least 1000mm (39 1/2") long should be fitted to the underside of the gutter or painted surface.

6. The air inlet/products outlet duct and the terminal of the boiler MUST NOT be closer than 25mm (1") to combustible material. Detailed recommendations on the protection of combustible material are given in BS.5440: Part 1.

7. Where it is essential that the terminal wall plate is fitted, i.e. wall thicknesses over 600mm (23 5/8") or with an inaccurately cut hole, the minimum spacing in Table 4, Nos. 2,3, 5 and 6 would be 60mm in order to allow the terminal wall plate to be fitted.

IMPORTANT

It is absolutely ESSENTIAL to ensure, in practice, that products of combustion discharging from the terminal cannot re-enter the building or any other adjacent building through ventilators, windows, doors, other sources of natural air infiltration or forced ventilation/air conditioning.

If this should occur, the appliance MUST be turned OFF immediately, labelled 'unsafe' and corrective action taken.

TERMINAL

The terminal assembly can be adapted to accommodate various wall thicknesses - refer to Frame 6 'Unpacking'.

Table 4 - Balanced flue terminal position

Terminal Position	Minimum Spacing
1. Directly below or alongside an openable window, air vent or other ventilation opening	300 mm (12")
2. Below guttering, drain pipes or soil pipes	25 mm (1")
3. Below eaves	25 mm (1")
4. Below balconies or a car port roof	25 mm (1")
5. From vertical drain pipes or soil pipes	25 mm (1")
6. From internal or external corners	25 mm (1")
7. Above adjacent ground, roof or balcony level	300 mm (12")
8. From a surface facing the terminal	600 mm (24")
9. From a terminal facing a terminal	1200 mm (48")
10. From an opening in a car port (e.g. door or window) into dwelling	1200 mm (48")
11. Vertically from a terminal on the same wall	1500 mm (60")
12. Horizontally from a terminal on the wall	300 mm (12")

AIR SUPPLY

Detailed recommendations for air supply are given in BS.5440:2.

The following notes are for general guidance:

1. It is NOT necessary to have a purpose provided air vent in the room or internal space in which the boiler is installed.
2. If the boiler is to be installed in a cupboard or compartment, permanent air vents are required (for cooling purposes) at both high and low levels. The air vents must either communicate with room/internal space or be direct to outside air. The minimum effective areas of the permanent air vents required in the cupboard/compartment are specified as follows and are related to maximum rated heat input.
3. Both air vents MUST communicate with the same room or internal space or MUST be on the same wall to outside air.
4. In siting the air vents care must be taken to avoid the freezing of pipework.

   Refer to Table 5 for details of air vent position and sizing.

Table 5 - Air supply

Position of air vent	Air from room/ internal space	Air direct from outside
High level cm^2 (in^2)	264 (41)	132 (21)
Low level cm^2 (in^2)	264 (41)	132 (21)

WATER CIRCULATION SYSTEM

The boiler is designed for connection to sealed water central heating systems but connection may be made to open water systems, if required. The domestic hot water (DHW) calorifier is incorporated within the boiler casing and only requires connection to the mains water supply.

Water connections maybe made at the top of, or to the bottom of the boiler.

IMPORTANT

Ensure that the mains water supply pressure is adequate to provide the required DHW flow rate. Refer to Tables 1 and 3 on page 3.

The central heating system should be in accordance with BS. 6798 and, in addition, for smallbore and microbore systems, BS. 5449.

The domestic hot water system should be in accordance with the relevant recommendations of BS. 5546.

Copper tubing to BS. 2871:1 is recommended for water-carrying pipework, and MUST be used for pipework carrying potable water.

Ancillary pipework not forming part of the useful heating surface should be lagged to prevent heat loss and any possible freezing - particularly where pipes run through roof spaces and ventilated underfloor spaces.

IMPORTANT

Draining taps MUST be located in accessible positions, which permit the draining of the whole system. They should be at least 1/2" BSP nominal size and be in accordance with BS. 2879.

Maximum recommended system hydraulic losses are given in Table 6 below:

Table 6 - Water flow rate and pressure loss

System load	kW (Btu/h)	23.4 (80 000)	19.0 (65 000)	4.4 (15 000)
Water flow rate	l/min (gal/h)	22.5 (297)	24.8 (327)	5 (75)
Temperature differential	°C (°F)	15 (27)	11 (20)	11 (20)
Pressure available for system	mbar (in. w.g.)	157 (63)	118 (47)	391 (157)

THERMOSTATIC RADIATOR VALVES

Caradon Ideal Ltd. recommend that heating systems utilising full thermostatic radiator valve control of temperature in individual rooms should also be fitted with a room thermostat controlling the temperature in a space served by radiators not fitted with such a valve, as stated in BS. 5449.

When thermostatic radiator valves are used the space heating temperature control over a living / dining area or hallway having a heating requirement of at least 10% of the boiler heat output should be achieved using a room thermostat, whilst other rooms are individually controlled by thermostatic radiator valves. However, if the system employs thermostatic radiator valves on all radiators or 2 port valves without end switches then a bypass must be fitted to ensure a flow of water, should all valves be in the closed position.

ELECTRICAL SUPPLY

Wiring external to the appliance MUST be in accordance with the current I.E.E. (BS.7671) Wiring Regulations and any local regulations which apply.

The point of connection to the mains should be readily accessible and adjacent to the boiler, except that for bathroom installations; the point of connection to the mains MUST be situated outside of the bathroom.

Note. *Where a room sealed appliance is installed in a room containing a bath or shower then the appliance and any electrical switch or appliance control utilising mains electricity should be so situated that it cannot be touched by a person using the bath or shower.*

spares & parts online IBASIS.COUK

4 SYSTEM REQUIREMENTS - CENTRAL HEATING

Notes.

a. *The method of filling, refilling, topping up or flushing sealed primary hot water circuits from the mains via a temporary hose connection is only allowed if acceptable to the local water authority.*

b. *Antifreeze fluid, corrosion and scale inhibitor fluids suitable for use with boilers having cast iron heat exchangers may be used in the central heating system. For further information contact:*

Fernox Manufacturing Co. Ltd.,
Britannic Works, Clavering, Essex. CB11 4QZ.

Tel: 01799 550 811

or

Grace Service Chemicals
Grace Dearborn Ltd.,
Widnes, Cheshire. WA8 8UD.

Tel: 0151 424 5351

1. General

a. The installation must comply with the requirements of BS.6891:1988 and BS.5449:1.

b. The installation should be designed to work with flow temperatures of up to 82^{0}C.

c. All components of the system must be suitable for a working pressure of 3 bar (45psi) and temperature of 110^{0}C. Care should be taken in making all connections so that the risk of leakage is minimised.

The following components are incorporated within the appliance:

- Circulating pump
- Safety valve, with a non-adjustable pre-set lift pressure of 3bar (45 psi)
- Pressure gauge, covering a range of 0-6 bar.
- 8-litre expansion vessel, with an initial charge pressure of 0.75 bar.

For further details refer to BS. 5449:1 and British Gas publication 'Specifications for Domestic Central Heating and Hot Water'.

2. Make-up Water

Provision must be made for replacing water loss from the system, either:

a. From a manually filled 'make-up' vessel with a readily visible water level.
The vessel should be mounted at least 150mm (6") above the highest point of the system, and be connected through a non-return valve to the system, fitted at least 150mm (6") below the make-up vessel on the return side of the domestic hot water cylinder or radiators.

b. Where access to a make-up vessel would be difficult by pre-pressurisation of the system. Refer to note 4 'Filling'. The maximum cold water capacity of the system should not exceed 127 litres if not pressurized. However, if the system is to be pressurized the efficiency of the expansion vessel will be reduced and a larger vessel (or smaller system volume) may be necessary. If the capacity of the vessel is not considered sufficient for this, or for any other reason, an additional vessel MUST be installed on the return to the boiler. Guidance on vessel sizing is given in the table shown and also in BS.7074:1 and BS.5449:1.

3. Mains Connection

There must be no direct connection to the mains water supply or to the water storage tank supplying domestic water, even through a non-return valve, without the approval of the local water authority.

4. Filling

The system may be filled by one of the following methods:

a. Through a temporary hose connection from a draw-off tap supplied from a service pipe under mains pressure. Where the mains pressure is excessive a pressure reducing valve must be used to facilitate filling.

i. Thoroughly flush out the whole system with cold water.

ii. Fill and vent the system until the pressure gauge registers 1.5 bar (21.5 psi) and examine for leaks.

iii. Check the operation of the safety valve by raising the water pressure until the valve lifts. This should occur within 0.3 bar (4.3psi) of the pre-set lift pressure.

iv. Release water from the system until the minimum system design pressure is reached - 1.0bar (14.5 psi) if the system is to be pre-pressurised.

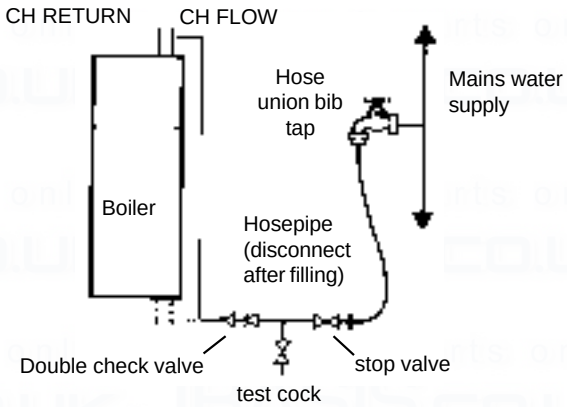

Safety valve setting	bar	3.0	
Vessel charge pressure	bar	0.5 to 0.75	
System pre-charge pressure	bar	None	1.0
System volume (litres)		**Expansion vessel volume (litres)**	
25		1.6	1.8
50		3.1	3.7
75		4.7	5.5
100		6.3	7.4
125		7.8	9.2
150		9.4	11.0
175		10.9	12.9
190		11.9	14.0
200		12.5	14.7
250		15.6	18.4
300		18.8	22.1
Multiplying factors for other system volumes		0.063	0.074

5 SYSTEM REQUIREMENTS - CENTRAL HEATING - *continued*

The following fittings shall form a permanent part of the system and shall be fitted in the order stated:

- A stop valve complying with the requirements of BS. 1010:2 (the hose from the draw-off tap shall be connected to this fitting).
- A test cock.
- A double check valve of an approved type.

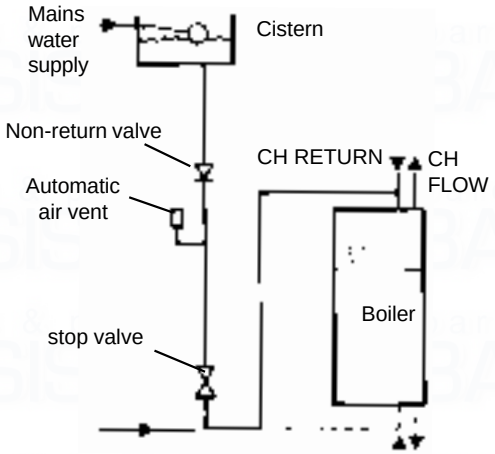

b. Through a cistern, used for no other purposes, via a ball valve permanently connected directly to a service pipe and/or a cold water distributing pipe.
The static head available from the cistern should be adequate to provide the desired initial system design pressure.

Note. *The stop valve may remain open during normal operation of the system if automatic water make-up is required.*

5. The maximum recommended system hydraulic losses are given below:

System load	kW (Btu/h)	23.4 (80 000)	19.0 (65 000)	4.4 (15 000)
Water flow rate	l/min (gal/h)	22.5 (297)	24.8 (327)	5.7 (75)
Temperature differential	°C (°F)	15 (27)	11 (20)	11 (20)
Pressure available for system	mbar (in. w.g.)	157 (63)	118 (47)	391 (157)

6. Thermostatic radiator valves

Caradon Ideal Ltd., support the recommendations made by leading manufacturers of domestic heating controls that heating systems utilising full thermostatic radiator valve control of temperature in individual rooms should also be fitted with a room thermostat controlling the temperature in a space served by radiators not fitted with such a valve. Such an arrangement will provide for a more efficient control of the environment and will also avoid the continuous running of the circulation pump during programmed heating ON periods, saving electrical energy. It is therefore strongly recommended that, when thermostatic radiator valves are used, the space heating temperature control over a living / dining area or a hallway having a heating requirement of at least 10% of the boiler output is achieved using a room thermostat, whilst other rooms are individually controlled by thermostatic radiator valves.

7. Open vented systems

The **Classic Combi FF280** is designed for use with sealed systems but can also be connected to open vented systems if required.

Note. *To comply with the relevant requirements of BS.5449:1 and BS.6798 the positions of the cold feed and vent must be as shown.*

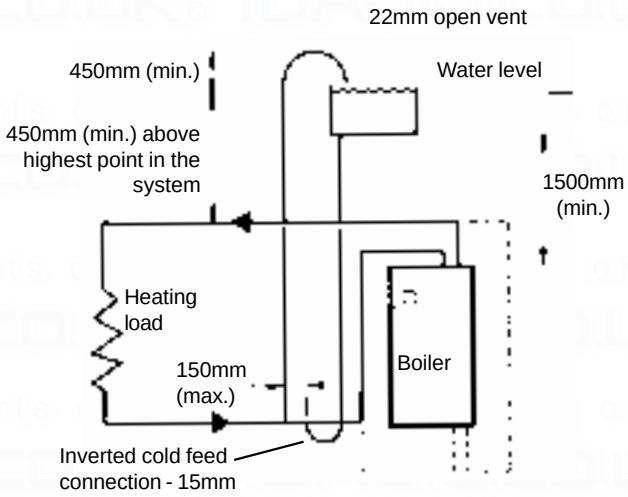

DOMESTIC HOT WATER REQUIREMENTS

The **Classic Combi FF280** is suitable for connection to most types of washing machine and dish washing appliances.

When connecting to suitable showers ensure that:

- The cold inlet to the boiler is fitted with an approved anti-vacuum or syphon non-return valve.
- Hot and cold water supplies to the shower are of equal pressure.

IMPORTANT.

Provision must be made to accommodate the expansion of DHW contained within the appliance if a non-return valve is fitted to the DHW inlet. Refer to Frame 4.

6 UNPACKING

The appliance is supplied as 2 separate modules (i.e. boiler module and Combi module) together with wall mounting plate (**Pack A1**) in one **Pack A.**

Also supplied is a standard flue assembly for lengths up to 600mm (23 1/2"), rear or side flue outlet, in **Pack B**.

Optional extras, if ordered (Extension Duct Kit D, Vertex Flue Kit G, Roof Flue Kit H and 90° Flue Elbow Kit) are available in separate boxes.

Unpack and check the contents.

Pack A Contents

- Combi module
- Boiler
- Pack A1

Pack A1 Contents
(contained within Pack A)

- Installation & Servicing Instructions
- User's Instructions
- Hardware Pack (listed below)
- Wall mounting template
- Wall mounting plate
- Stand-off brackets - 2 off
- Side outlet terminal mounting plate

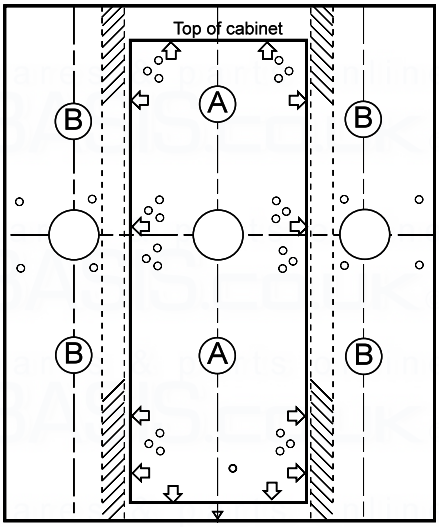

Wall mounting template

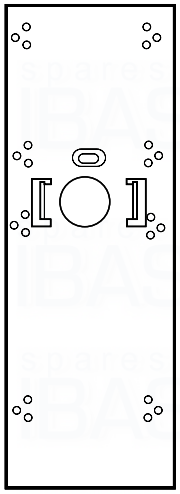

Wall mounting plate

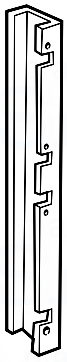

Stand-off brackets - 2 off

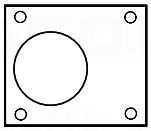

Side outlet terminal mounting plate

207 - 0

Hardware Pack Contents

- No.14 x 50mm wood screws - 8 off (for wall mounting plate)
- No.10 x 50mm wood screws - 8 off (for side outlet plate and terminal wall plate)
- Wall plugs - 16 off
- M6 nuts - 8 off (for stand-off brackets)
- M6 screws - 8 off (for stand-off brackets)
- M6 washers - 8 off (for stand-off brackets)
- Sealing plate - 1 off (for back panel)
- M8 x 12mm screw - 1 off (for sealing plate)
- M8 washer - 1 off (for sealing plate)
- 22mm compression elbow - 1 off (for boiler / combi RETURN)
- 22mm brass elbow - 1 off (for boiler / combi FLOW)
- Plastic elbow extractor - 1 off
- 7/8" sealing washers - 2 off (for CH flow and return)
- 3/4" sealing washer - 1 off
- 1/2" sealing washers - 3 off (for DHW inlet & outlet and CH expansion vessel)
- 2 1/2" pozi-screw - 1 off (for Combi module cover)
- Rubber gasket and screw - 1 off (bypass valve)
- Terminal strip cover - 1 off
- M5 washer - 1 off
- M5 extended nut - 1 off
- Flue extension tube - 1 off
- M5 wing nut - 3 off
- IEC mains plug
- Boiler sealing plate

Pack B Contents:

- Flue cutting support (cardboard) - 1 off
- Terminal wall plate - 1 off
- Terminal grille assembly - 1 off
- Polyurethane foam seal 400 lg - 1 off
- No. 8 x 8 lg. Pozi pan screw hd. screws - 3 off

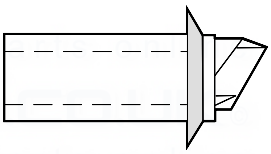

Flue terminal

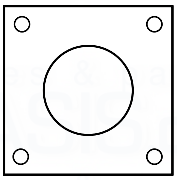

Terminal wall plate

208 - 0

7 PACKAGING AND CASING REMOVAL

1. Unpack the boiler.
2. Remove the casing as follows and place to one side to avoid damage:
   - **a.** Release controls pod fixing screws (a) 3 full turns only. Remove the pod by pulling it forward to disengage from the keyhole slots.
   - **b.** Undo the 4 screws (b) retaining the casing to the back panel.
   - **c.** Remove the casing in the direction of the arrows.
3. Remove the boiler from its packaging base. The boiler may now be stood upright on its controls support protection frame to ease handling and installation.
4. Unpack the flue assembly / extension flue box(es).

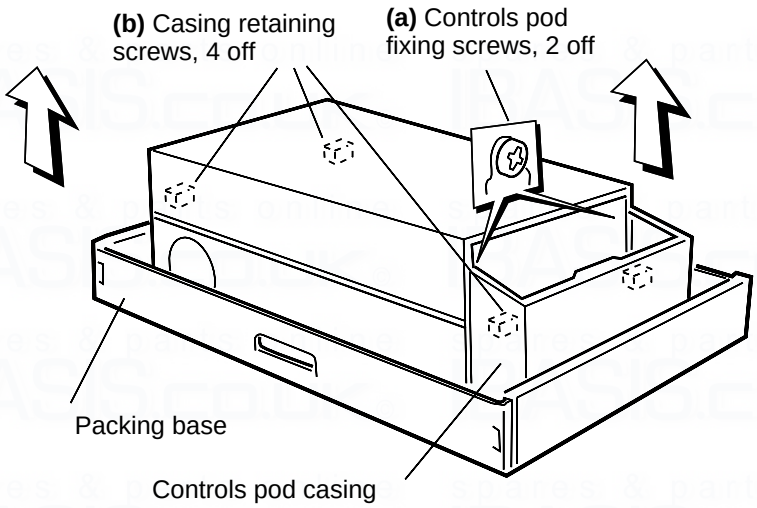

8 FLUE ASSEMBLY - Exploded View

1. An optional flue duct extension kit is required for wall thicknesses greater than 600mm (23 1/2") Refer to Frame 36.

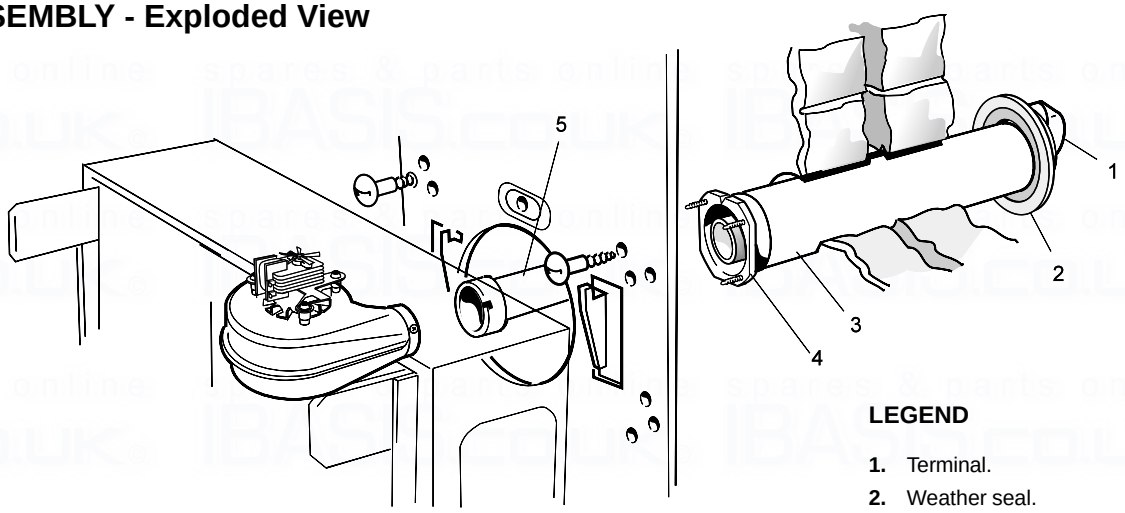

LEGEND

1. Terminal.
2. Weather seal.
3. Flue assembly.
4. Boiler sealing plate.
5. Flue extension tube.

9 WALL MOUNTING TEMPLATE

Note. *The template shows the positions for the fixing holes and the flue hole centres for standard installation. Care must be taken to ensure the correct holes are drilled.*

1. Discard both sections B of the template.
2. Tape the template into the selected position.
3. Ensure squareness by hanging a plumb line as shown.
4. Mark onto the wall (if required) the following:
   - **a.** The 8 wall mounting plate screw positions and the lower fixing screw positions.
   - **b.** The position of the flue duct.

   Note. *Mark the centre of the flue hole as well as the circumference.*
5. Remove the template from the wall.

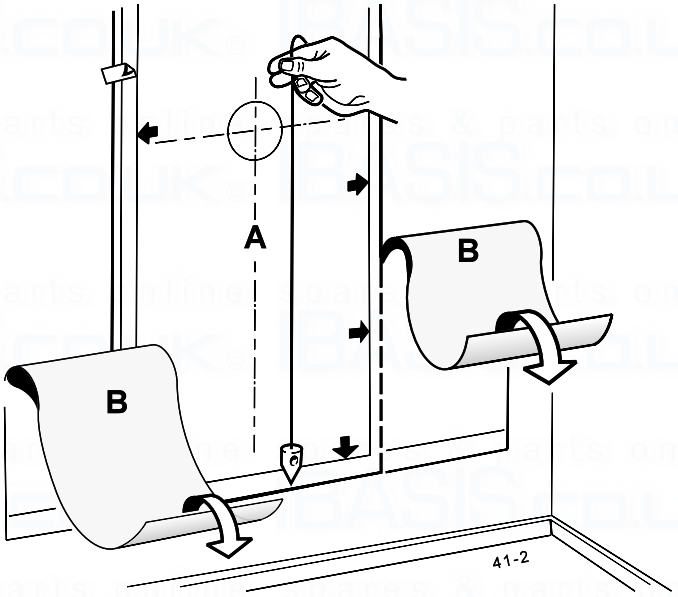

10 PREPARING THE WALL

IMPORTANT.

Ensure that, during the cutting operation, masonry falling outside of the building does not cause damage or personal injury.

1. Cut the flue hole preferably with a 125mm (5") core boring tool, ensuring that the hole is square to the wall. If the hole has been quite accurately cut with a drill, then making good the wall faces is not essential as seals are provided at both ends of the flue. However, both wall faces immediately around the cut hole should be flat; make good if necessary. For less accurate holes make good to approximately 125mm (5") diameter at the 2 wall faces.
2. Drill 9 holes for the wall mounting plate with an 8mm (5/16") masonry drill.
3. Insert the plastic plugs provided.

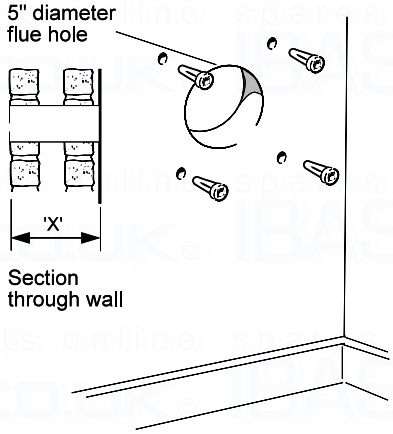

Note. *Check all of the hole positions BEFORE drilling*

Note. *If the terminal is to be sited within 25-40mm of a corner or vertical pipe (refer to Table 4) then the hole MUST be accurately cut and the rubber weather seal trimmed around the groove provided.*
The terminal wall plate need not be fitted.

11 CUTTING THE FLUE - wall thicknesses of 114 to 600mm

Note.
If the stand-off brackets are used it is essential that 45mm is added to the measured wall thickness when marking the flue, to allow for the thickness of the brackets.

1. Measure and note the wall thickness X.
2. Mark the wall thickness onto the flue.
3. To ensure the tube is cut square, mark the flue all the way round.
4. Cut to length X, using the cardboard ring for support.
5. Remove the cardboard ring and remove any burrs.

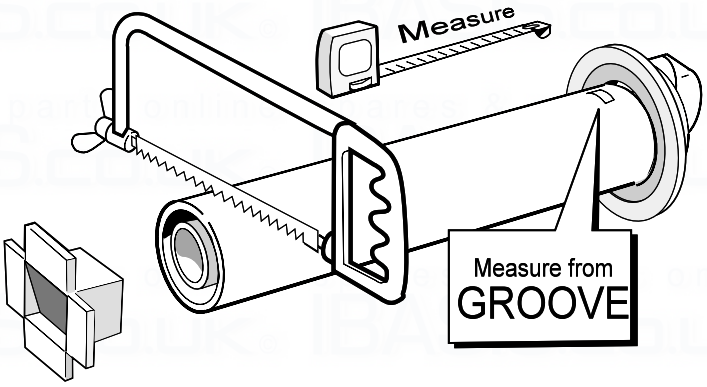

12 FITTING THE BOILER SEALING RING TO THE FLUE

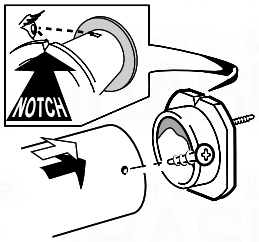

1. Fit the boiler sealing ring inside the outer flue duct. Ensure the boiler sealing ring is fully engaged.
   Ensure the notch aligns with the groove on the outer flue duct. This ensures correct alignment of the flue terminal.
2. Drill 3 holes 3.2mm (1/8") dia. through the outer flue duct and boiler sealing ring. **Do NOT drill the inner flue duct.**
3. Insert the self tapping screws, provided, in order to fix the boiler sealing ring in position.
4. Stick the self adhesive foam strip, provided in the hardware pack, onto the flue immediately behind the boiler sealing ring.

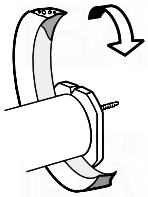

13 FITTING THE STAND-OFF BRACKETS

Installations with bottom water connections

Secure the 2 stand-off brackets to the wall mounting plate, using the eight M6 nuts, screws and shakeproof washers provided so that the plate is located BEHIND the front returns of the brackets, as shown.

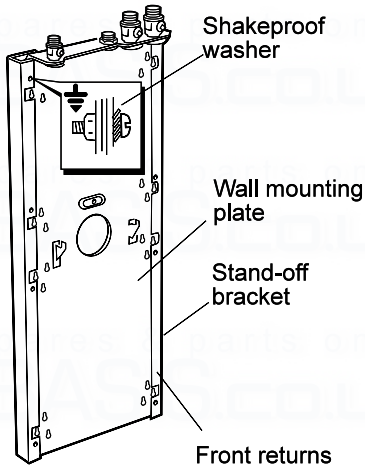

Note. *If the clearances above and below the boiler are less than the length of the pipes to be fitted behind the wall mounting plate, then refer to Frame 16.*

IMPORTANT. To ensure earth continuity, securing screws MUST be fitted in the top holes (marked with the ⏚ symbol) with the shakeproof washers positioned under the screw heads.

14 FITTING THE FLUE ASSEMBLY

1. Insert the flue extension tube into the flue assembly.
2. Insert the flue assembly through the hole far enough to allow the rubber seal to unfold completely and form an adequate seal on the outside wall.
3. Ensure the notch is at the top - this will aid the location of the studs into the boiler back panel.

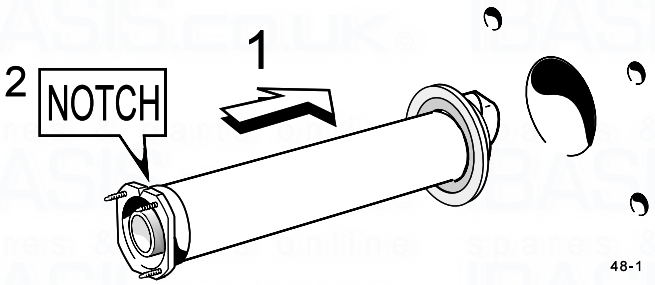

15 WALL MOUNTING PLATE

1. Engage the plate (or plate and stand-off brackets) on the top fixing screws.
2. Locate six No.14 x 2" screws in the lower fixing holes and drive home all screws.
3. Check with a spirit level that the plate is vertical.

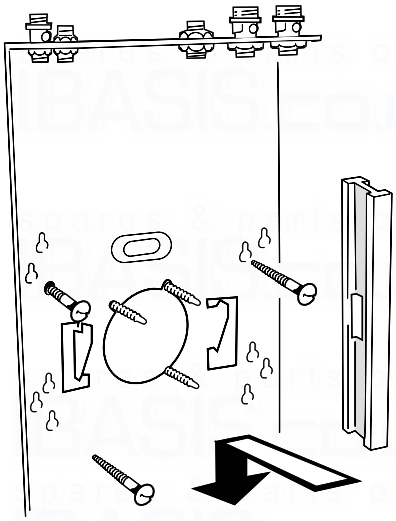

16 PRE-PIPING

IMPORTANT.

For installations with bottom water connections only; the following pipe runs must be made before the boiler is mounted on the wall.

1. Make the connections to the fittings on top of the wall mounting plate, as shown.

Note. *For installations with a minimum top clearance of 100mm (4") the following fittings should be used.*

- 22mm vented elbow (e.g. NIBCO)
- 22mm M & F elbow (e.g. ENDEX)

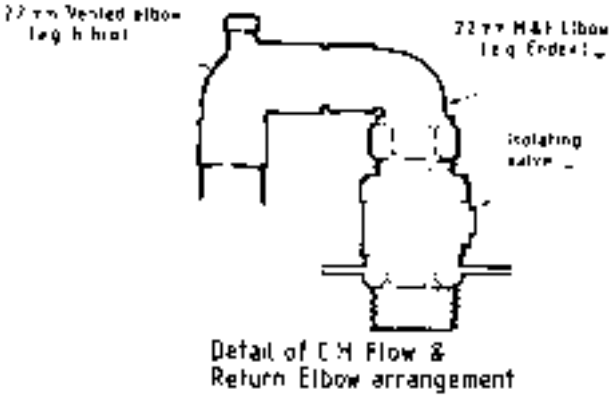

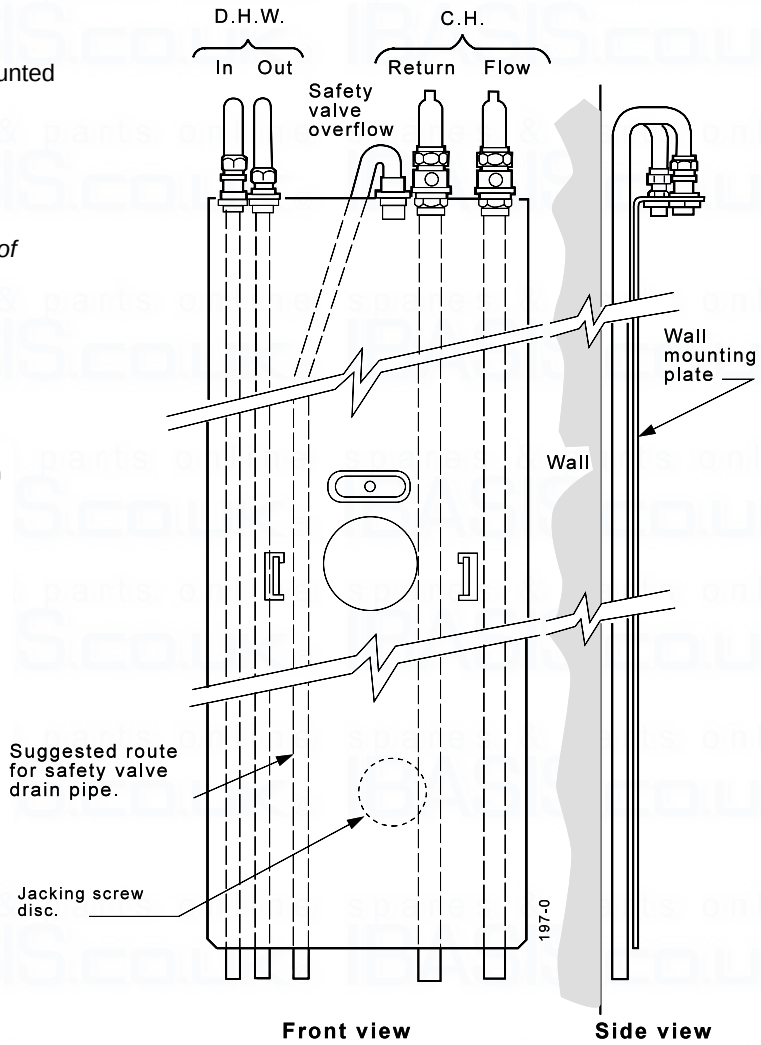

2. Extend the pipes down the wall, as shown, ensuring that:

a. They terminate at least 50mm (2") below the bottom of the wall mounting plate.

b. The CH flow and return pipes are vented to aid filling.

Note. *If the clearances above and below the boiler are less than the length of the pipes it will be necessary to position the pipe runs behind the wall mounting plate BEFORE the plate is screwed to the wall.*

FOR BOTH TOP AND BOTTOM WATER CONNECTIONS

If required, connection to the system pipework may now be made BEFORE the boiler is mounted on the wall.

PROCEED TO FRAME 42

17 PRE-WIRING

The mains supply and other external wiring may now be made, if required, BEFORE the boiler and Combi modules are mounted on the wall - refer to Frames 46 to 49.

REAR FLUE OUTLET

18 MOUNTING THE BOILER

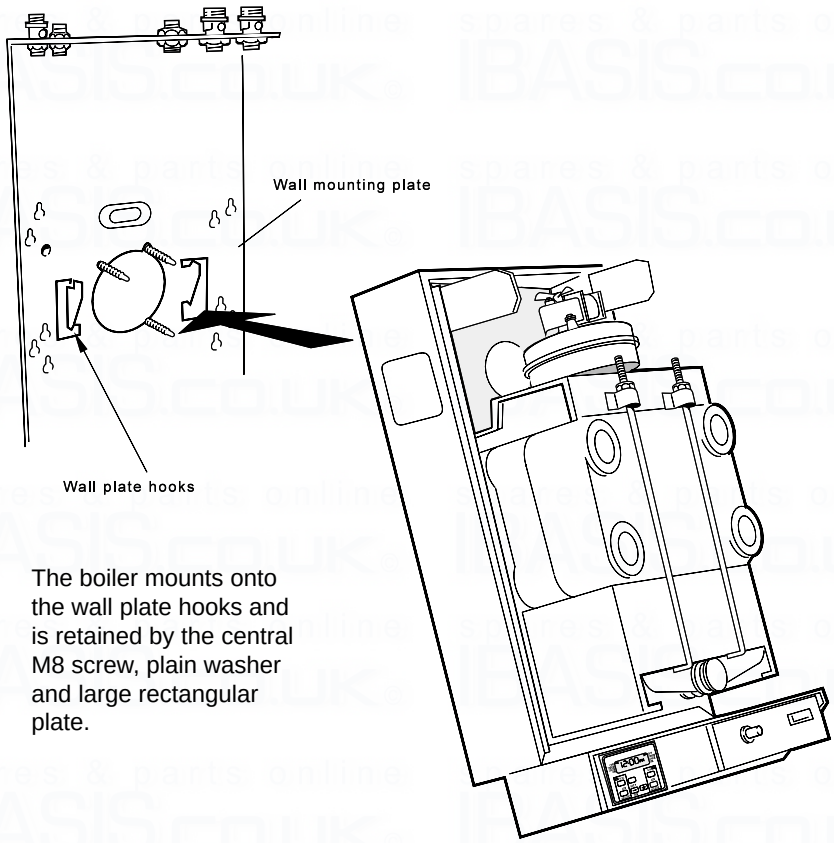

The boiler mounts onto the wall plate hooks and is retained by the central M8 screw, plain washer and large rectangular plate.

Note. *Have ready to hand the M8 screw, plain washer and rectangular plate supplied in the hardware pack.*

1. Lift the boiler onto the wall mounting plate hooks as shown.

DO NOT USE THE BURNER / CONTROLS ASSEMBLY FOR LIFTING

IMPORTANT.

The boiler module MUST be positioned CENTRALLY on the wall mounting plate. Refer to the index mark on the back panel.

2. Fit the M8 screw, washer and rectangular plate to retain the boiler.

Note.

Before fully tightening the M8 screw, check the boiler alignment using a spirit level, and adjust as necessary with the jacking screw - refer to Frame 3.

DO NOT USE THE BURNER / CONTROLS ASSEMBLY FOR LIFTING

19 CONNECTING THE FLUE TO THE BOILER

1. Pull the flue through the wall mounting plate and locate the 3 studs in the holes in the back panel.
2. Secure the flue to the boiler using the three M5 wing nuts provided.
3. Pull the flue extension tube and engage onto the fan, locate and secure with the M4 screw attached to the fan.
4. If a terminal wall plate is to be fitted proceed to Frame 34.

Note.

The sealing plate studs will locate in the back panel one way only. This will ensure that the terminal grille is correctly aligned.

APPLIANCES FITTED WITH A REAR OUTLET FLUE: *PROCEED DIRECTLY TO FRAME 38*

20 FLUE ASSEMBLY - Exploded View

For wall thickness 114mm to 600mm

1. An optional flue duct extension kit is required for lengths (distance from the outside wall to the relevant side of the boiler casing) greater than 600mm (23 1/2") Refer to Frame 3 .

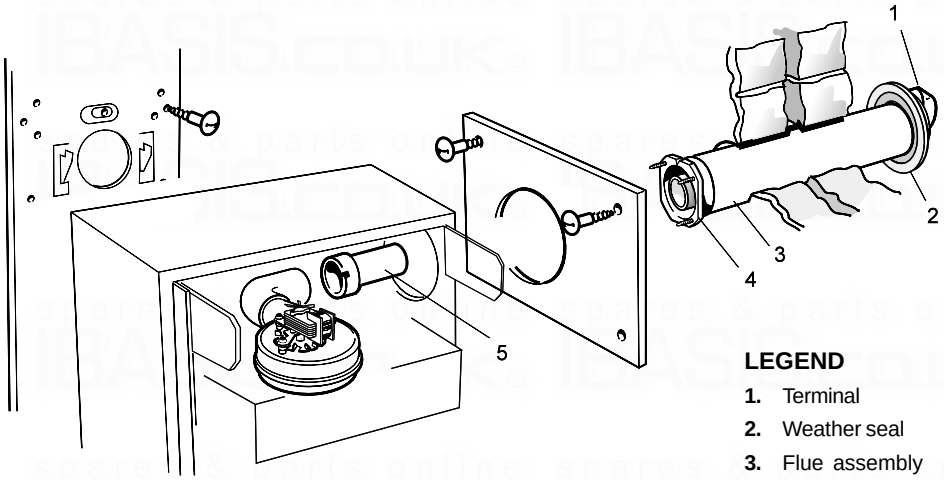

LEGEND

1. Terminal
2. Weather seal
3. Flue assembly
4. Boiler sealing plate
5. Flue extension tube

21 WALL MOUNTING TEMPLATE

Note. *The template shows the positions for the fixing holes and the flue hole centres for standard installation.*

Installations with top water connections only:
Tear off and discard the shaded portion of template B (refer to Frame 6)

Care MUST be taken to ensure the correct holes are drilled.

1. Separate the templates.
2. Tape both templates into the selected position, locating template B through an extended centre line, as shown.
3. Ensure squareness by hanging a plumb line as shown.
4. Mark onto the wall the following:
   - **a.** The wall mounting plate screw positions (choose one from each group).
   - **b.** The 4 screw positions for the side outlet plate.
   - **c.** The position of the flue duct hole. (Ensure that the correct centre is marked, depending upon whether the brackets are used or not)

   Note. *Mark the centre of the hole as well as the circumference.*
   - **d.** The side of the casing nearest the flue outlet.

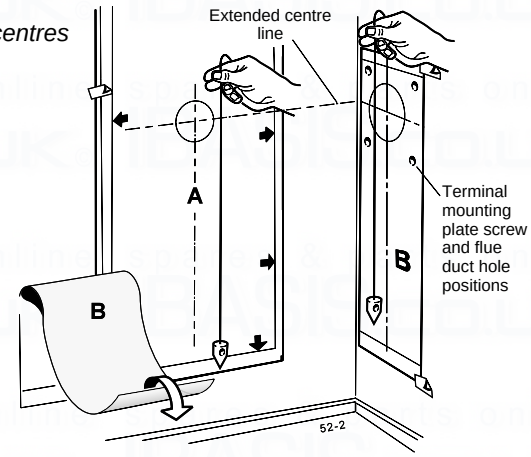

5. Remove both templates from the wall.

22 PREPARING THE WALL

IMPORTANT. Ensure that, during the cutting operation, masonry falling outside of the building does not cause damage or personal injury.

1. Cut the flue hole preferably with a 125mm (5") core boring tool, ensuring that the hole is square to the wall. If the hole has been accurately cut with a drill then making good the wall faces is not essential as seals are provided at both ends of the flue. However, both wall faces immediately around the cut hole should be flat; make good if necessary. For less accurate holes make good to approximately 125mm (5") diameter at the 2 wall faces.
2. Drill 8 holes with an 8mm (5/16") masonry drill and insert the plastic plugs provided, for the side mounting plate and the wall mounting plate.
3. Drill 4 holes with a 7mm (9/32") masonry drill and insert the plastic plugs provided for the side mounting plate.

Note. *If the terminal is to be sited within 25-40mm of a corner or vertical pipe (refer to Table 4) then the hole MUST be accurately cut and the rubber weather seal trimmed around the groove provided. The terminal wall plate need not be fitted.*

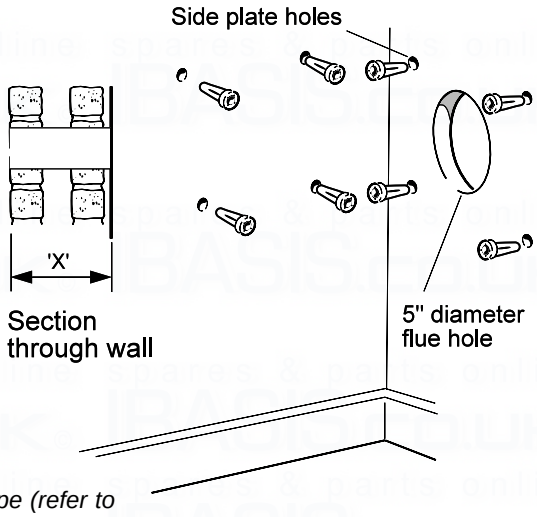

23 CUTTING THE FLUE
For flue lengths 114 to 600mm ONLY

1. Measure the flue length required (i.e. the distance from the side of the boiler to the outside face of the wall) - refer to Frame 3.
2. Mark the flue length required on to the flue, measuring from the groove near the terminal.
3. To ensure the tube is cut square, mark the flue all the way round.
4. Insert the cardboard duct ring for support and cut to length.
5. Remove cardboard duct ring and remove any burrs.

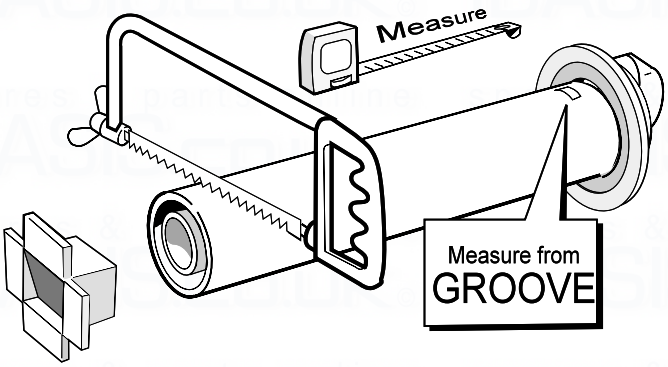

For flue lengths greater than 600mm, refer to Frames 36 and 37- Flue extension ducts.

24 FITTING THE FOAM SEAL

1. To determine the position for the foam seal, measure the wall thickness and mark it onto the flue, measuring from the groove near the terminal.
2. Wrap the self adhesive foam strip round the flue, ensuring that the foam is on the terminal side of the line. This seals the gap between the flue and the wall.

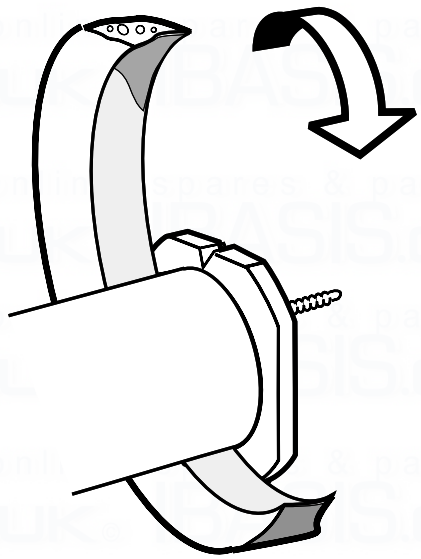

25 FITTING THE BOILER SEALING RING TO THE FLUE

1. Fit the boiler sealing ring inside the outer flue duct. Ensure the boiler sealing ring is fully engaged. Ensure the notch aligns with the groove on the outer flue duct. This ensures correct alignment of the flue terminal.
2. Drill 3 holes 3.2mm (1/8") dia. through the outer flue duct and boiler sealing ring. ***Do not drill the inner flue duct.***
3. Insert the self tapping screws, provided, in order to fix the boiler sealing ring in position.

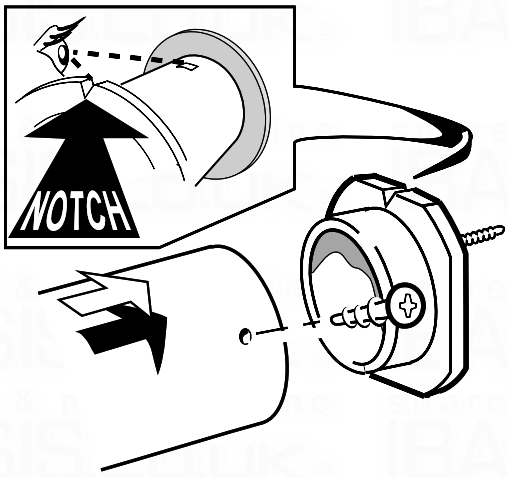

26 FITTING THE FLUE ASSEMBLY

1. Insert the flue assembly through the hole far enough to allow the rubber seal to unfold completely and form an adequate seal on the outside wall. This will also ensure the correct alignment of the flue terminal.
2. Ensure the notch is at the top. This will aid the location of the studs into the boiler back panel.

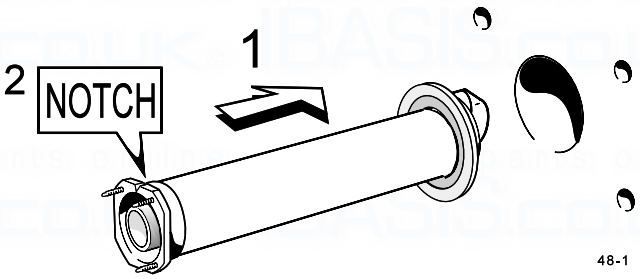

Flue assembly

27 FITTING THE STAND-OFF BRACKETS

Installations with bottom water connections only

Secure the 2 stand-off brackets to the wall mounting plate, using the eight M6 nuts, screws and shakeproof washers provided, so that the plate is located BEHIND the front returns of the brackets, as shown.

Note.
If the clearances above and below the boiler are less than the length of the pipes to be fitted behind the wall mounting plate then refer to Frame 16.

IMPORTANT.

To ensure earth continuity, securing screws MUST be fitted in the top holes (marked with the ⏚ symbol) with the shakeproof washers positioned under the screw heads.

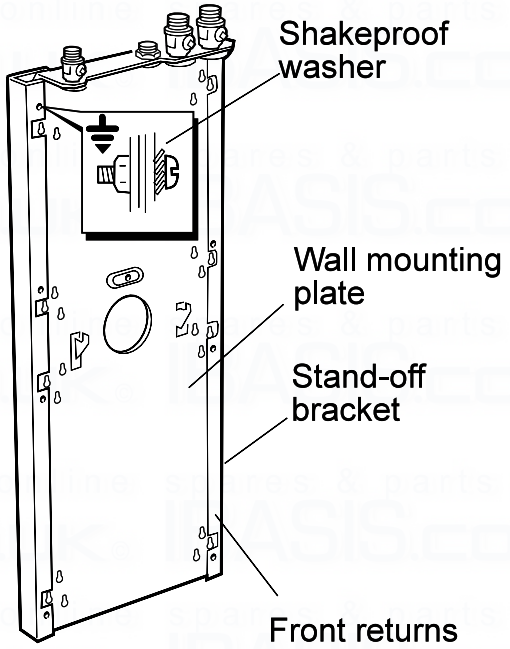

28 WALL MOUNTING PLATE

1. Locate two No.14 x 2" screws in the wall mounting plate top fixing holes and screw home to within 6mm (1/4") of the wall surface.
2. Engage the plate (or plate and stand-off brackets) on the screws.
3. Locate six No.14 x 2" screws in the lower fixing holes and drive home all 8 screws.
4. Check with a spirit level that the plate is vertical.

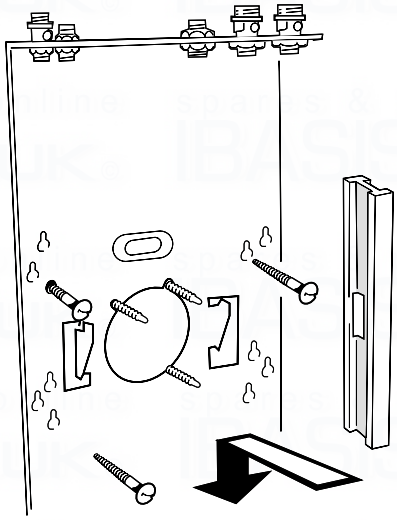

29 FITTING THE SIDE OUTLET PLATES

Note. *If the boiler is fitted closer than 25mm to the side wall the side outlet plate must be fitted now.*

1. Split the side outlet plate into 2 down the split line.
2. Fit the 2 halves of the side outlet plate to the wall, ensuring that they are behind the boiler sealing ring.

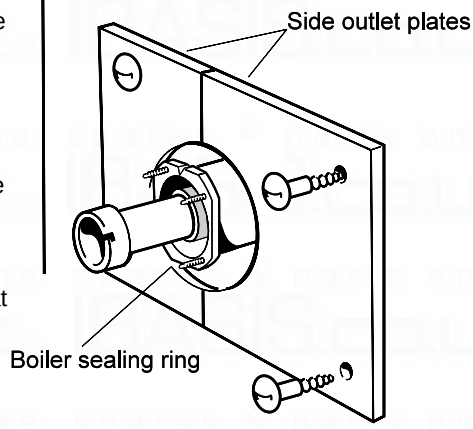

30 PRE-PIPING

IMPORTANT.

For installations with bottom water connections only

The pipe runs shown in Frame 16 must be made before the boiler is mounted on the wall.

For installations with both top and bottom water connections

If required, connection to the system pipework may now be made before the boiler is mounted on the wall - proceed to 'Water Connections', Frame 42.

31 PRE-WIRING

The mains supply and other external wiring may now be made, if required, before the boiler and Combi modules are mounted on the wall.

Refer to Frames 46 to 49.

32 MOUNTING THE BOILER MODULE

Note. *Have ready to hand the M8 screw, plain washer and rectangular plate supplied in the hardware pack.*

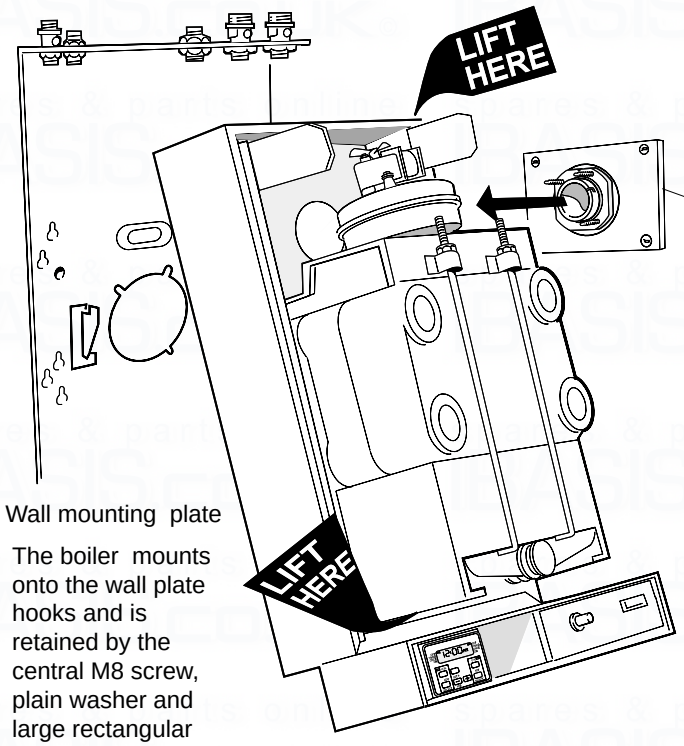

Wall mounting plate

The boiler mounts onto the wall plate hooks and is retained by the central M8 screw, plain washer and large rectangular plate.

1. Lift the boiler onto the wall mounting plate hooks as shown.

   DO NOT USE THE BURNER / CONTROLS ASSEMBLY FOR LIFTING

Terminal mounting plate

The air duct spigot engages in the hole in the side panel.

IMPORTANT.

The boiler module MUST be positioned CENTRALLY on the wall mounting plate. Refer to the index mark on the back panel

2. Fit the M8 screw, plain washer and rectangular plate to retain the boiler.

Note.
Before fully tightening the M8 screw, check the boiler alignment using a spirit level, and adjust as necessary with the jacking screw - refer to Frame 3.

DO NOT USE THE BURNER / CONTROLS ASSEMBLY FOR LIFTING

33 CONNECTING THE FLUE TO THE BOILER

1. Pull the flue through the side outlet plate and locate the 3 studs in the hole in the side of the boiler.
2. Secure the flue to the boiler using the three M5 nuts, provided.
3. Insert the flue extension tube into the flue.
4. First remove the underside screw which is not required then fit the 90^0 flue elbow, supplied with the boiler, onto the fan in the direction required. Secure in position with the screw.
5. Pull the flue extension tube and engage onto the fan elbow and secure with the screw.

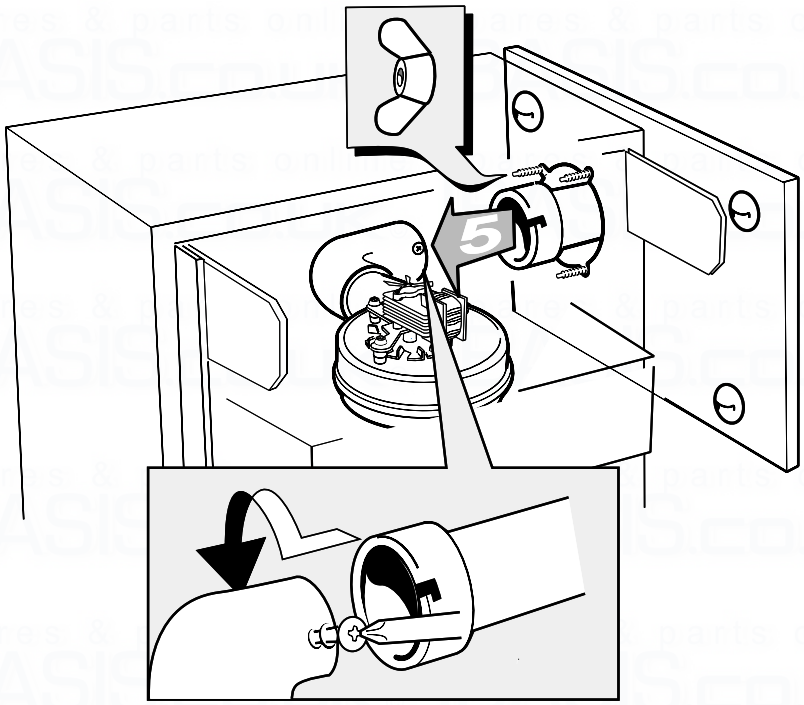

Note.
The sealing plate studs will locate in the back panel one way only. This will ensure that the terminal grille is correctly aligned.

34 TERMINAL WALL PLATE

This plate allows neat concealment and full compression of the rubber seal. Its use is not essential if the flue hole and flue ducts have been accurately cut and the outside wall face is flat.

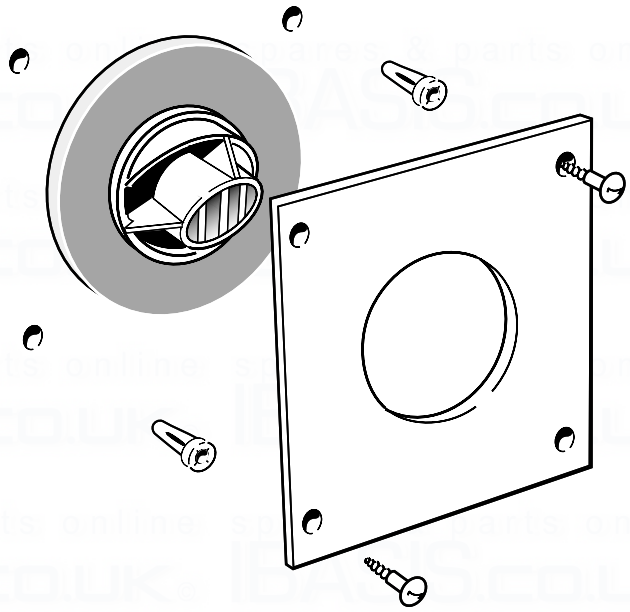

1. Position the terminal wall plate over the terminal.
2. Drill 4 fixing holes with an 7mm (9/32") masonry drill.
3. Insert the 4 plastic plugs provided.
4. Secure the plate with 4 of the No.10 x 2" screws provided.

Note.
If the terminal is less than 2m (6' 6") above ground level, an approved terminal guard should be fitted. Refer to the contents list on Page 2.

35 FLUE EXTENSION DUCTS - For flue lengths greater than 600mm

PACK D Flue Extension Duct Kit contents

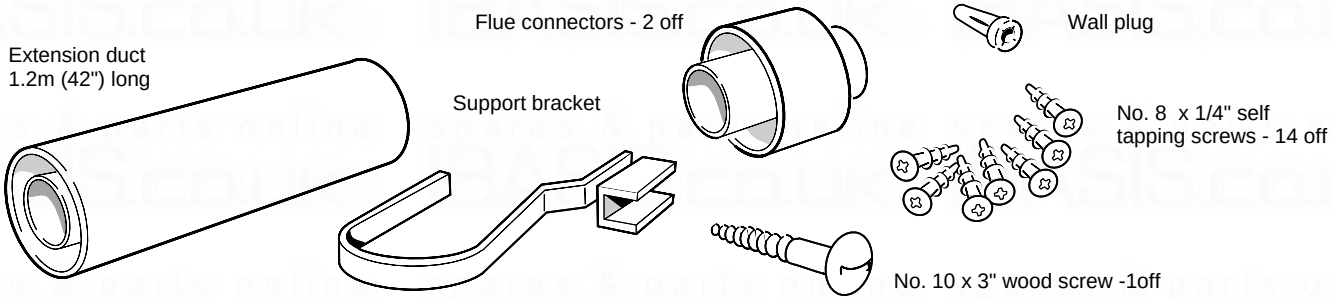

36 FLUE EXTENSION DUCTS - continued

Use a maximum of two extension ducts only

General arrangement

Note. *Side flue shown.*

1. A ***maximum*** of 2 extension ducts (plus the standard flue duct) may be used together.
2. Flue extensions of greater length than 1m (39") should be supported with the bracket provided. If the stand-off brackets have been used it is necessary, in order to keep the flue aligned, to use the spacer bracket with the support bracket.

Flue length	Accessories	Product No.
Up to 600	B Pack 1 off	see Frame 3
600 to 1800	B Pack 1 off + D Pack, 1 off	see Frame 3
1800 to 3000	B Pack 1 off + D Pack, 2 off	see Frame 3

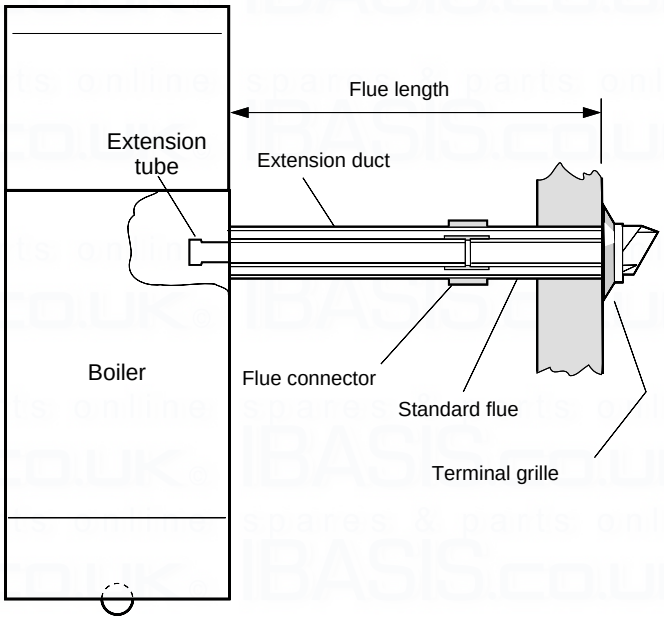

37 FITTING THE KIT

Note. *Remove the cardboard duct ring from the end of the standard flue duct (Pack B).*

1. Remove the flue extension tube from the flue and place safely to one side.
2. Fit the flue connector onto the standard flue duct.
3. Drill three 3.2mm (1/8") dia. equally spaced holes through the flue connector and the outer flue duct. **Do NOT drill the inner flue duct.**
4. Insert the self tapping screws, provided, in order to fix the connector in position.
5. Fit the inner flue duct into the connector.
6. Drill one 3.2mm (1/8") hole through the flue connector and inner flue duct, and secure in position with a self tapping screw.
7. Fit the outer flue duct into the connector.
8. Drill three 3.2mm (1/8") dia equally spaced holes through the flue connector and the outer flue duct. **Do NOT drill the inner flue.**
9. Insert the self tapping screws, provided, in order to fix the connector in position.
10. Repeat steps 5 - 9 if a second flue extension duct is required.
11. Measure and mark the flue length required onto the flue, measuring from the groove near the terminal.
12. To ensure the tube is cut square, mark the flue all the way round.
13. Using the cardboard ring for support, cut to length.
14. Remove cardboard ring and remove any burrs.
15. For rear outlet flue: follow the procedure from Frame 8.
    For side outlet flue: follow the procedure from Frame 20.

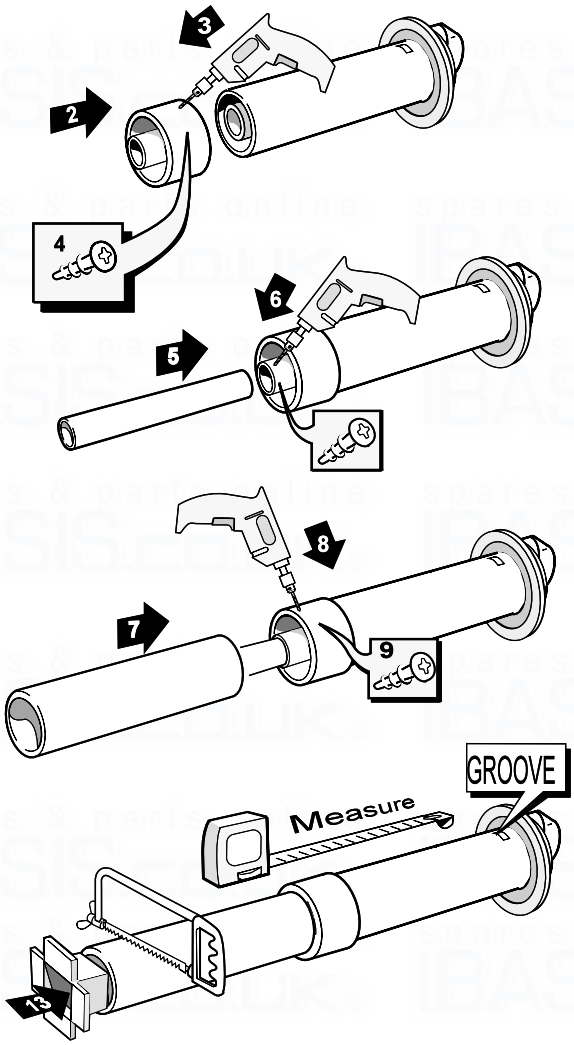

38 MOUNTING THE COMBI MODULE

1. Remove the Combi module from its box.
2. Lift off the Combi module cover, as shown.

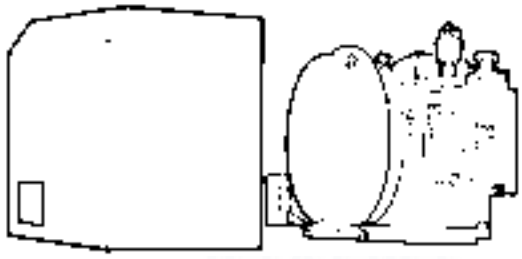

View of Combi module with cover removed

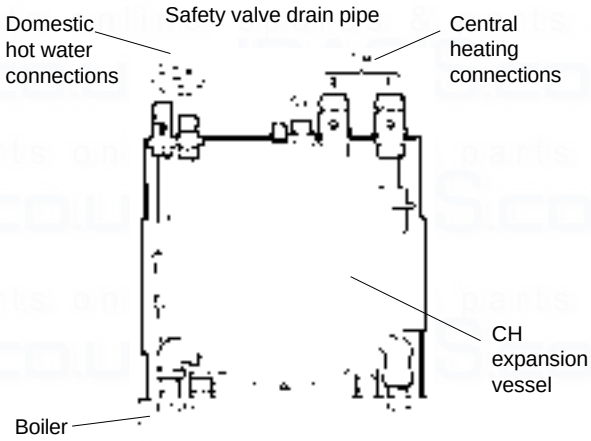

3. Slacken the retaining screw, lift out the CH expansion vessel and place safely to one side.
4. Remove the transit packing
5. Slacken the 2 retaining screws, lift out the CH expansion vessel support bracket (complete with the pressure gauge) and place safely to one side.
6. Fit the brass compression elbow (A), provided, on to the boiler RETURN pipe and angle it approximately 60^0 , as shown in Frame 39 - *do not tighten.*
7. Push-fit the brass elbow (B), provided, on to the boiler FLOW pipe, facing forwards, as shown. Apply soap solution to ease fitting.

   Note. *Ensure that the elbow is pushed fully home onto the pipe.*

8. Offer the Combi module on top of the boiler and engage the Combi module RETURN pipe within the brass compression elbow (A).

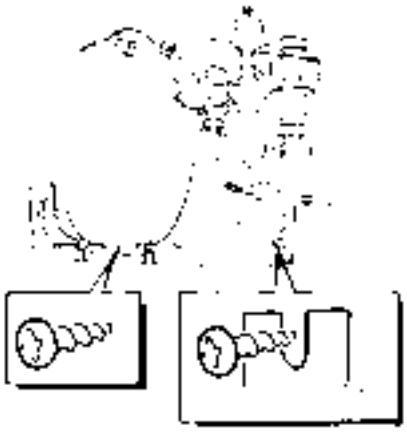

39 MOUNTING THE COMBI MODULE - continued

9. Swing the Combi module into position, as shown, and snap the Combi module FLOW pipe into the brass elbow (B), ensuring that it is pushed fully home to the index mark on the Combi module flow pipe.

Note. *Should it be necessary to realign the brass push-fit elbow on the boiler flow pipe elbow, this can be done using the plastic extractor supplied in the hardware pack.*

DO NOT TIGHTEN THE BRASS COMPRESSION ELBOW UNIONS

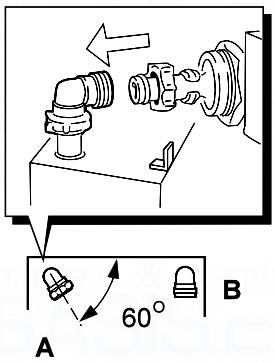

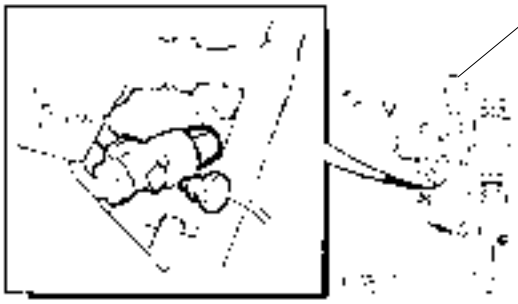

10. Connect the DHW inlet and outlet pipes, safety valve drain pipe and the CH flow and return pipes to the bulkhead fittings on top of the wall mounting plate, using the 5 sealing washers provided. Fully tighten. Refer to the view opposite.

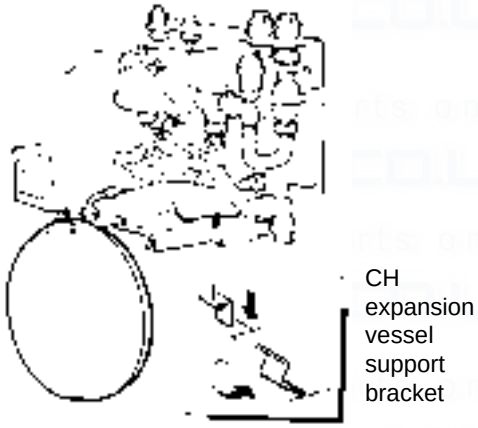

Notes.

a. *Make the 2 outside connections first, i.e. DHW inlet and CH flow. Tighten and draw the assembly up.*

b. *The automatic air vent may be removed, to gain better access to the CH union connections.*

View of boiler module with CH expansion vessel in the servicing position

11. Tighten the union nuts of the brass compression elbow (A).

12. Fit the CH expansion vessel support bracket.

13. Connect the pressure gauge capillary to the safety valve.

14. Hang the CH expansion vessel in the servicing position and connect the flexible pipe, using the sealing washer provided. Ensure that the pipe is positioned at 90° to the vessel, as shown.

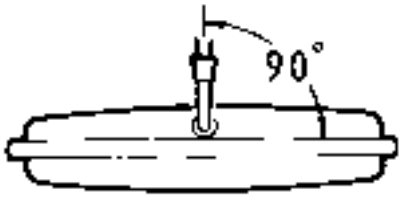

40 PRESSURE GAUGE HEIGHT ADJUSTMENT

It may be found necessary to adjust the position of the pressure gauge in order for it to locate centrally in the aperture provided in the module casing. This can be eased by checking the dimension from the bottom of the pressure gauge bezel and the top of the boiler casing, at the point when the expansion vessel is fitted.

Refer to diagram.

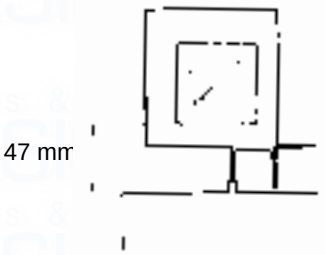

If adjustment is found to be necessary undo the 2 locking nuts provided, adjust the hexagon headed screws until the 47mm dimension is achieved and tighten the locking nuts.

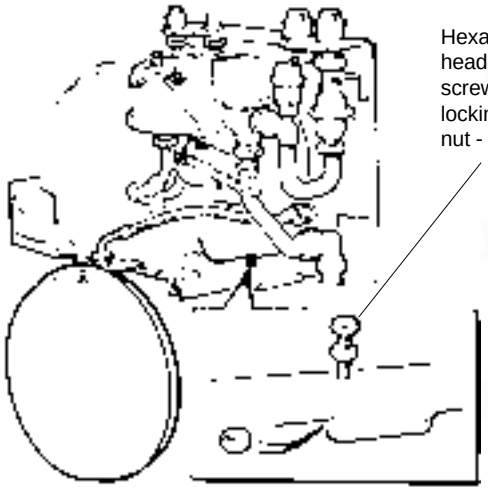

41 GAS CONNECTION

Refer to 'Gas Supply' (page 5), for gas inlet service dimensions (Frame 2).

A **minimum** pressure of 20mbar MUST be available at the boiler inlet, with the boiler operating.

The main gas cock is on the left hand side of the gas control valve.

To facilitate connection the gas cock may be removed from the gas control valve.

42 WATER CONNECTIONS

CENTRAL HEATING

- When the CH load exceeds 20.5 kW (70 000 Btu/h) then 28mm (11/10") pipes should be used, both to and from the boiler, as soon as is practicable after the initial 22mm connection.
- For methods of filling refer to Frame 4.

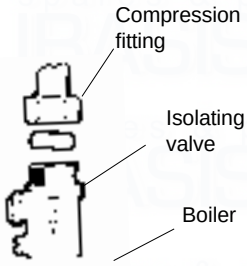

1. Connect the CH flow and return pipes to the boiler, as shown, or to the pipework previously fitted (**Installations with bottom connections only** -refer to Frame 16).
2. Ensure that the CH isolating valves are open.
3. Fill and vent the system. Check for water soundness.

   IMPORTANT. When filling:

   a. Set the diverter valve manual lever to the OPEN position.

Note. *The manual lever is shown in the CLOSED position*

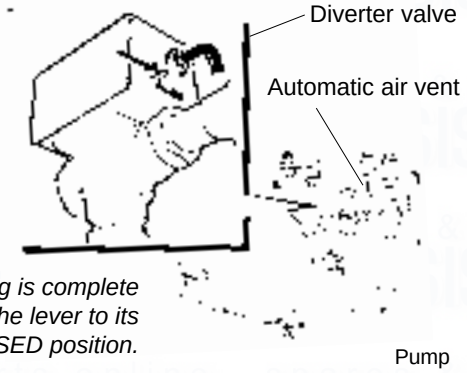

When filling is complete return the lever to its CLOSED position.

   b. The cap on the automatic air vent MUST be loose at all times.
   When filling there may be a slight water leak from the vent therefore electrical connections should be protected.

   c. Vent the DHW calorifier circuit via the manual air vent on top of the calorifier.

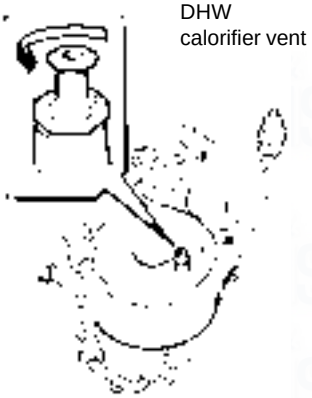

4. Ensure that the pump selector switch is set to No.3 and that the pump is free to rotate.
   a. Remove the vent plug.
   b. Using a screwdriver, rotate the shaft several times.
   c. Replace the vent plug.

   Note. *Some slight water leakage will occur.*

Detail of pump selector switch

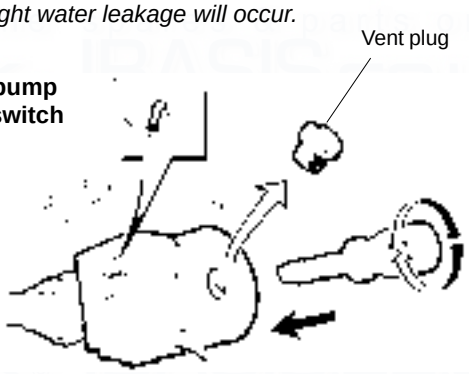

DOMESTIC HOT WATER SUPPLY

- The DHW supply pipe must be thoroughly flushed BEFORE connecting to the boiler.
- The boiler incorporates a DHW filter therefore no external device is necessary.
- It is recommended that a water softening device is fitted on the cold water inlet supply, particularly in hard water areas.
- Ensure that the mains supply pressure is sufficient to provide the maximum delivery of domestic hot water (approximately 0.9 bar, minimum). In areas where the mains water pressure is known to be high (greater than 10 bar) it is recommended that a water governor is fitted on the cold inlet supply to the boiler.

IMPORTANT. Devices incorporating non-return valves MUST NOT be fitted to the DHW inlet, unless provision is made to accommodate the expansion of the DHW contained within the appliance. A suitable expansion vessel of the 'Zilmet' or 'WMP' type should be fitted, externally to the boiler, between the non-return valve and the boiler.

1. Connect the hot and cold water supply pipes to the boiler, as shown, or to the pipework previously fitted (**Installations with bottom connections only** - refer to Frame 16).
2. Open the domestic hot water draw-off taps, clear air locks and check for water soundness.

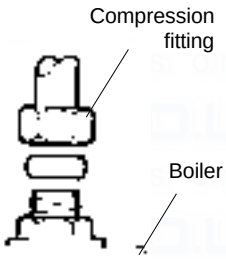

43 WATER CONNECTIONS - continued

3. Domestic hot water flow rate setting:

a. Fully open all DHW taps in turn and ensure that water flows freely from them.

b. Close all taps, except the furthest from the boiler, and check that the boiler is firing at maximum rate.

c. Turn the DHW flow adjuster CLOCKWISE, to reduce the DHW flow rate, until a rate of approximately 9.6 l/min (2.1gpm) is obtained at the tap.

d. Turn off the DHW tap.

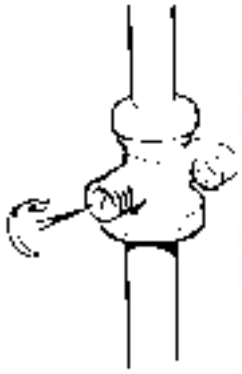

44 SAFETY VALVE OVERFLOW

Route a 15mm pipe from the safety valve overflow connection, on top of the wall mounting plate, to a position outside of the building so that any discharge of water or steam from the valve cannot create a hazard to the occupants or damage to electrical components and wiring.

45 CH EXPANSION VESSEL LOCATION

Fit the CH expansion vessel in its working position and secure with the retaining screw.

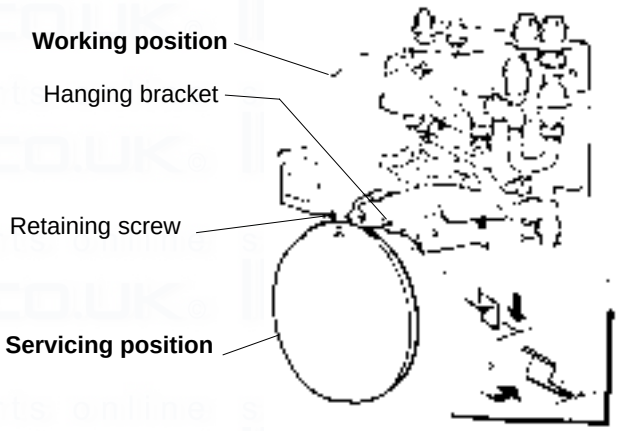

Note.
Ensure that the expansion vessel is orientated as shown, to facilitate the fitting of the Combi module cover.

46 ELECTRICAL CONNECTIONS

WARNING.

The appliance must be efficiently earthed.

A mains supply of 230 V ~ 50 Hz is required.

All external controls and wiring must be suitable for mains voltage.

Wiring should be in 3-core PVC insulating cable, not less than 0.75mm² (24 x 0.2mm) to BS. 6500 Table 16 and 70°C 'T' rating.

The supply connection must be made via a double-pole switch, fused at 3 Amps, having a 3mm contact separation in both poles, serving only the boiler and system controls.

Pictorial and schematic wiring diagrams are shown in Frames 49 and 50.

Note.
If the optional Programmer Kit is to be fitted, refer to the instructions provided with the kit and Frame 48 .

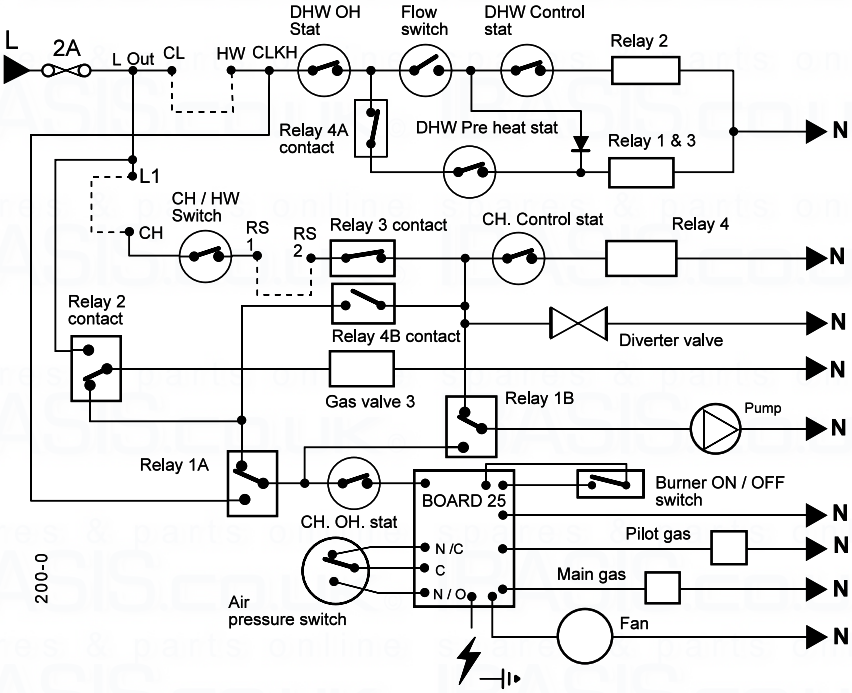

Flow wiring diagram

47 WIRING THE BOILER

1. Plug the wall plate wiring harness lead into the PCB (Board No.27) as shown.

2. Connect the earth lead from the wall plate wiring harness to the earth post on the underside of the boiler control support.

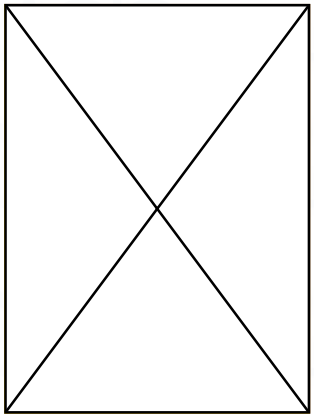

3. Connect the lead from the wiring harness to the flying lead connection outside the control box.

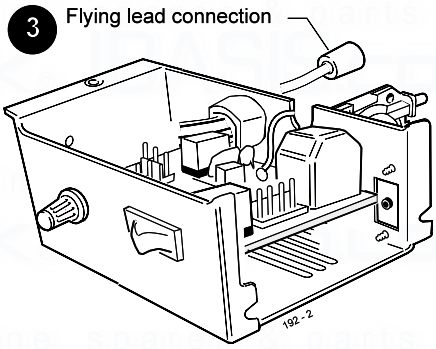

4. Plug in the lead to the gas valve

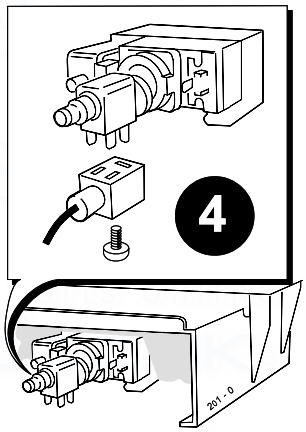

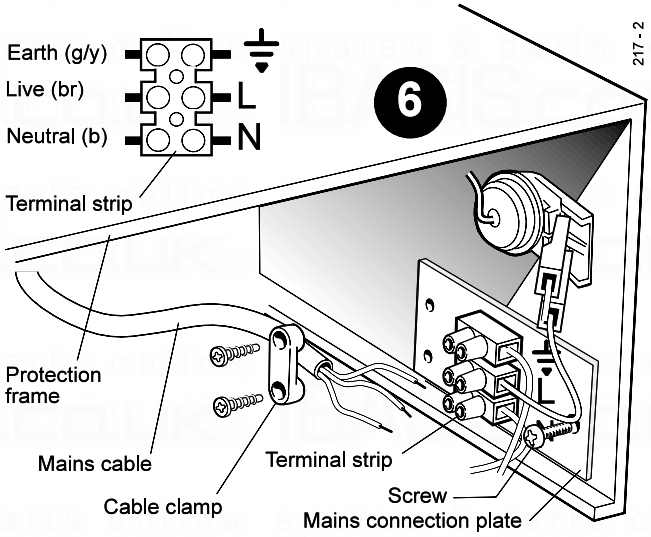

Connecting the mains supply

5. Wire the mains lead into the supply terminals marked L, N and ⏚. Secure with the cable clamp.

6. Wire the control box cable into the terminal at the side of the protection frame.

Notes.

a. *The mains lead connection MUST be made in such a way that, should the lead slip from the anchorage, the current conductors become taut before the earthing conductor.*

b. *The 'T' rating of the mains lead should be 70 °C.*

c. *Ensure that no basic insulation is accessible outside of the terminal box and that the cable is secured into the clamp on its supplementary insulation.*

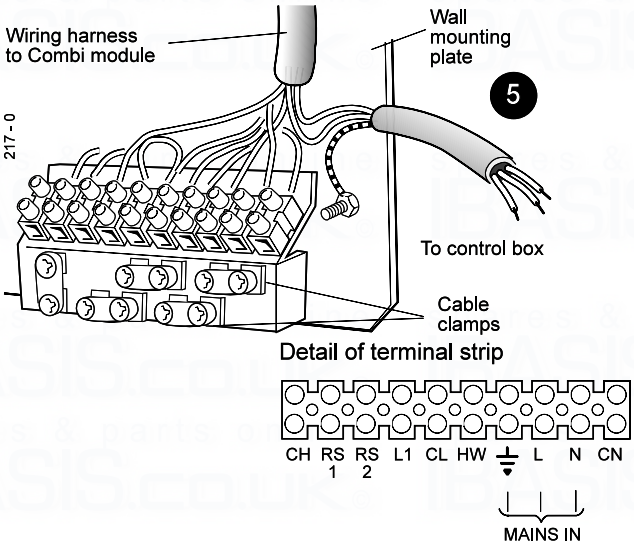

7. Fit the terminal strip cover under the control box and secure it to the wall mounting plate with the extended nut as shown.

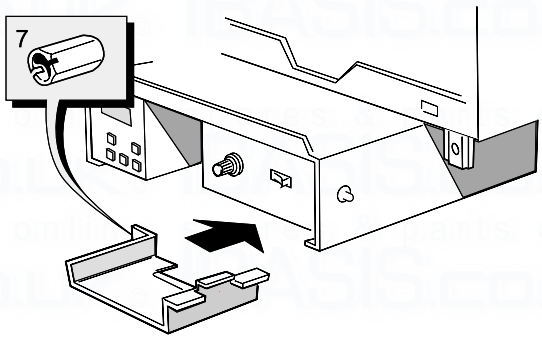

48 EXTERNAL CONTROLS

External wiring must be in accordance with the current I.E.E. (BS.7671) Wiring Regulations. Difficulty in wiring should not arise, providing the following directions are observed. Refer to the Pictorial and Schematic Wiring Diagrams (Frames 49 and 50).

a. Room thermostat
Remove the link between terminals RS1 and RS2. Wire in the room thermostat. (Reference should be made to the manufacturer's instructions).

b. Programmer
Remove the link between terminals CH and L1, and CL and HW. Wire in the time switch according to Diagrams 1 and 2.

Note.
Wire the programmer and the room thermostat neutrals into terminal CN

c. Frost protection

Central heating systems fitted wholly inside the house do not normally require frost protection as the house acts as a 'storage heater' and can normally be left at least 24 hrs. without frost damage.

However, if parts of the pipework run outside the house or if the boiler will be left off for more than a day or so, then a frost thermostat should be wired into the system.

This is usually done at the programmer, in which case the programme selector switches are set to OFF - all other controls MUST be left in the running position. The frost thermostat should be sited in a cold place but where it can sense heat from the system.

Wiring should be as shown, with minimal disturbance to other wiring of the programmer. Designation of the terminals will vary but the programmer and thermostat manufacturer's leaflets will give full details.

Diagram A shows a double pole frost thermostat, which should suffice for all systems which do not use the OFF terminals of the programmer.

Diagram B shows a 'changeover' frost thermostat, which will cover most systems which do use CH OFF. If, however, on such a system the HW pipework is in an isolated part of the house, a second frost thermostat may be used to protect it.

If in doubt, ask your installer for advice.

Note.
Secure any leads with the cable clamps provided.
Refit the terminal box cover.

1. CLOCK CONTROL OF HEATING ONLY

24 hr. DHW Preheat

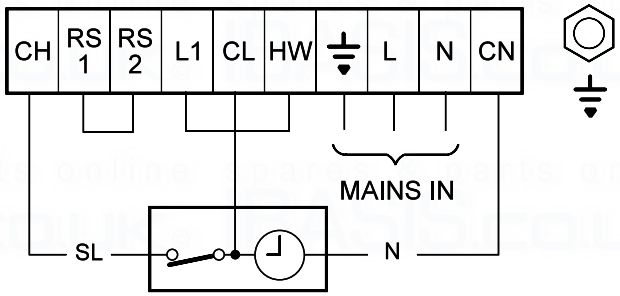

2. FULL CONTROL WITH PROGRAMMER & ROOM THERMOSTAT

Timed DHW Preheat

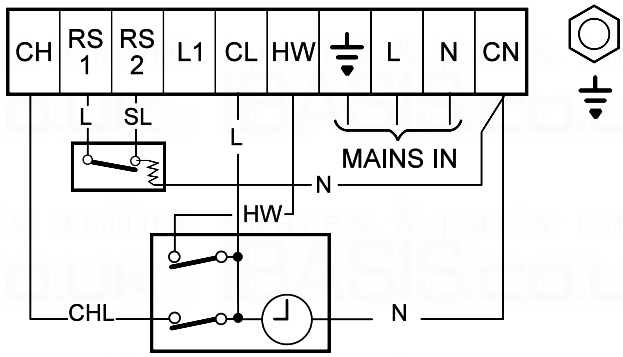

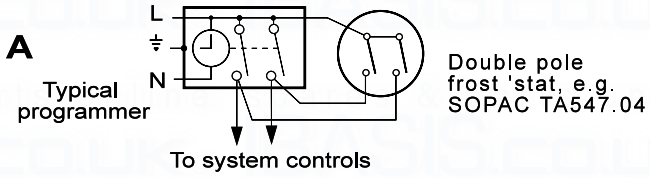

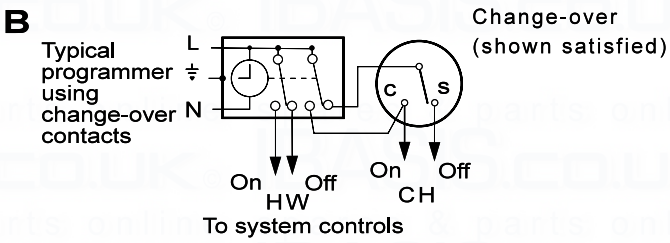

49 PICTORIAL WIRING DIAGRAM

LEGEND

- **b** blue
- **bk** black
- **br** brown
- **r** red
- **y** yellow
- **w** white
- **g/y** green/yellow
- **bk/w** black/white
- **v** violet
- **gy** grey

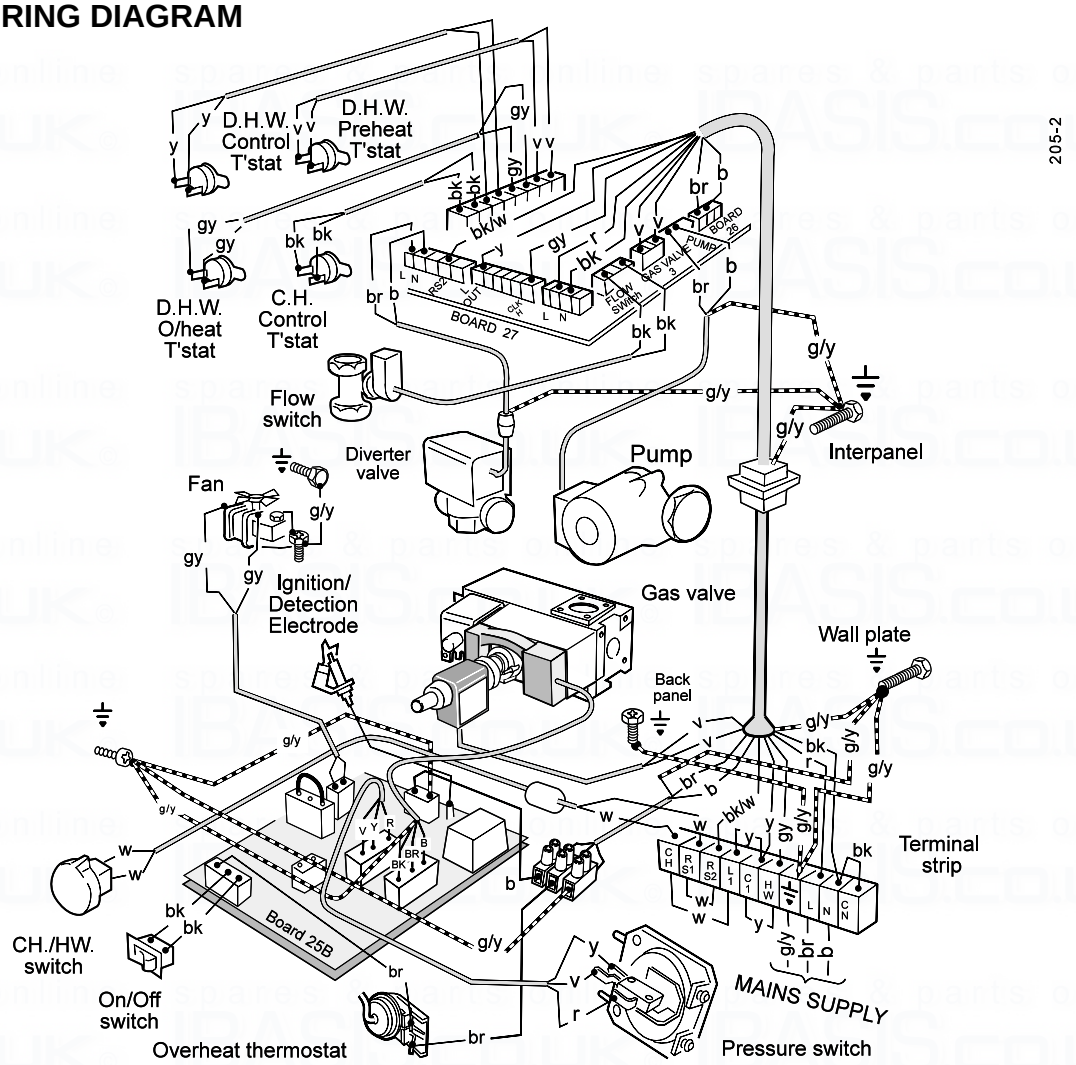

50 SCHEMATIC WIRING DIAGRAM

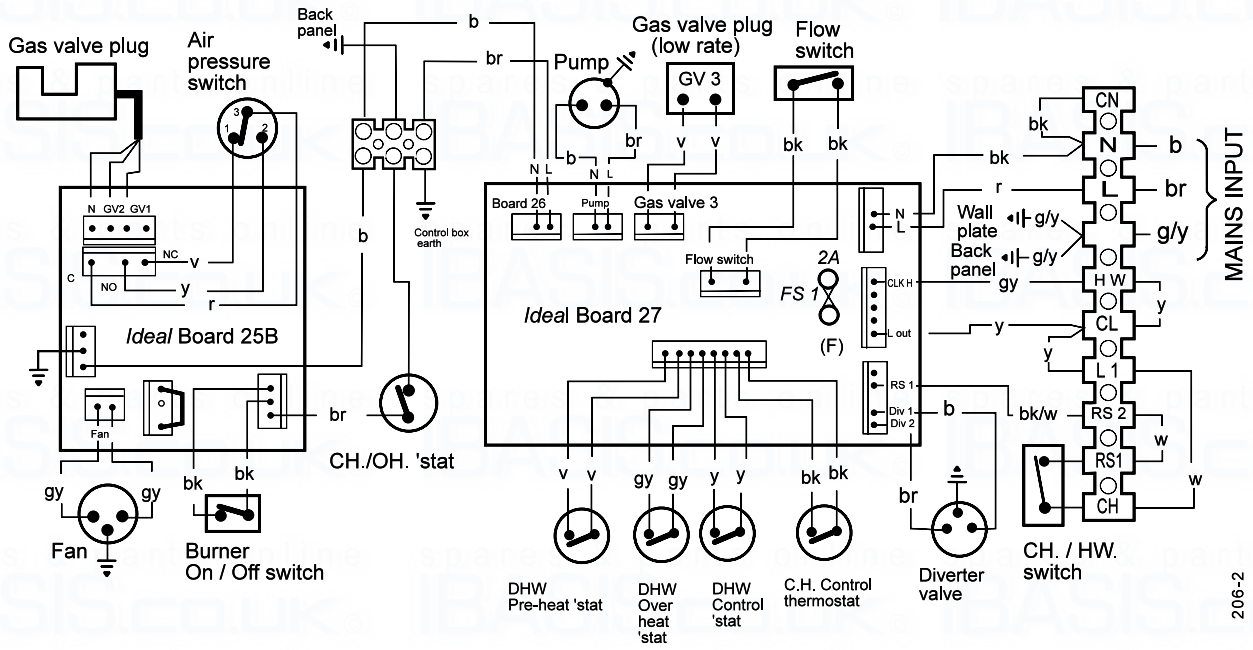

LEGEND

b	blue	**br**	brown	**y**	yellow	**g/y**	green/yellow	**v**	violet
bk	black	**r**	red	**w**	white	**bk/w**	black/white	**gy**	grey

51 COMMISSIONING AND TESTING

(a) Electrical Installation

1. Checks to ensure electrical safety should be carried out by a competent person.
2. ALWAYS carry out preliminary electrical system checks, i.e. earth continuity, polarity, resistance to earth and short circuit using a suitable test meter.

(b) Gas Installation

1. The whole of the gas installation, including the meter, MUST be inspected and tested for soundness and purged in accordance with the recommendations of BS. 6891.
2. Purging air from the gas installation may be expedited by loosening the union on the gas service cock on the boiler and purging until gas is detected.
3. Retighten the union and check for gas soundness.

WARNING. Whilst effecting the required gas soundness test and purging air from the gas installation open all windows and doors, extinguish naked lights and **DO NOT SMOKE.**

52 INITIAL LIGHTING

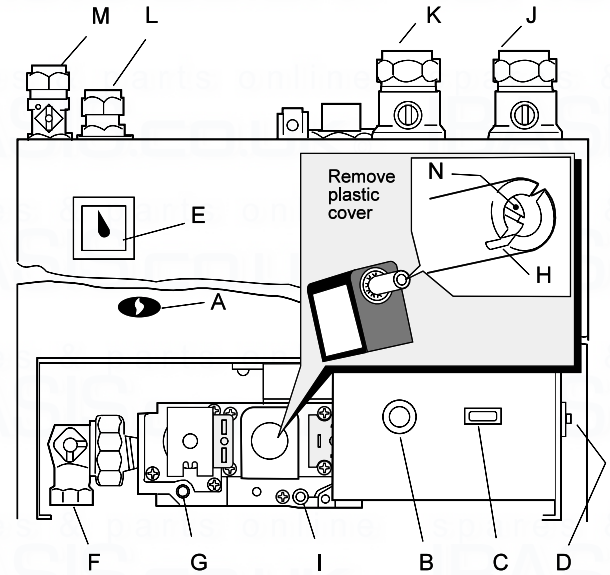

LEGEND

- **A** Sightglass
- **B** CH / HW switch
- **C** Burner on/off switch
- **D** Overheat thermostat reset button
- **E** CH pressure gauge
- **F** Gas service cock.
- **G** Inlet pressure test point
- **H** Main burner pressure adjuster (outer)
- **I** Burner pressure test point
- **J** CH flow isolating valve
- **K** CH return isolating valve
- **L** DHW outlet
- **M** DHW inlet isolating valve.
- **N** Low rate adjusting screw (inner)

1. Check that the electricity supply is OFF.
2. Check that all the drain cocks are closed and the central heating isolating valves (J and K) and the domestic hot water isolating valve (M) are OPEN. Check that the diverter valve manual lever is in the CLOSED position. Refer to Frame 42.
3. Check that the gas service cock (F) is OPEN. Also check that the CH switch (B) and burner on/off switch (C) are OFF.
4. Fit the boiler casing but do not fit the Combi module cover or the controls casing pod.

   WARNING. **Do NOT operate the boiler with the casing removed as damage to the control box may result**

5. Slacken the screw in the burner pressure test point (I) and connect a gas pressure gauge via a flexible tube.
6. Switch the electricity supply ON and check that all external controls are calling for heat: The pump will start.

TO LIGHT THE BOILER

7. Set the burner on/off switch to ON and the fan (and pump) will start. After the fan has run for a few seconds the pilot solenoid valve will open and the intermittent spark commence, continuing until the pilot is established. The main burner will then light at low rate, approximately 6.0mb (2.4 in.w.g.) burner pressure. If this sequence does not occur refer to the Fault Finding section.
8. Check that the pilot flame envelops the ignition / detection electrode. If the pilot flame appears incorrect refer to 'Pilot Burner Replacement' in the Servicing section.
9. Test for gas soundness around ALL boiler gas components, using leak detection fluid. Particularly check gas valve flanges.
10. Set the burner on/off switch to OFF.

FITTING THE BOILER CASING

Boiler module

- Lift the boiler casing up to the boiler assembly and secure with 4 captive screws.
- The casing must seat correctly and compress the sealing strip to make an airtight joint. Visually check the side seals but if side clearances are limited then check that the top and bottom edges of the casing are correctly located.

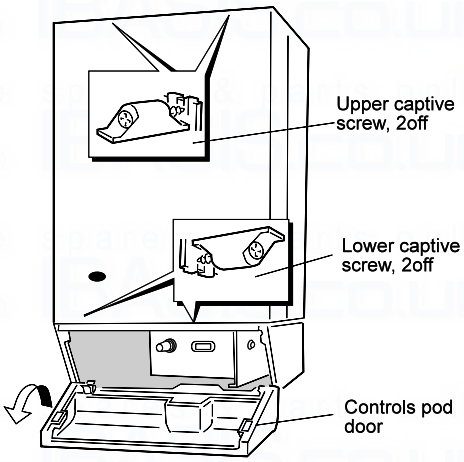

Controls casing pod

- Locate the pod on the 2 fixing screws. Push the pod forward to engage in the keyhole slots and tighten the fixing screws.

Combi module cover

- Lift the cover up to the module and push forward to engage in the keyhole slots. Secure with the 2 1/2" pozi screw provided.

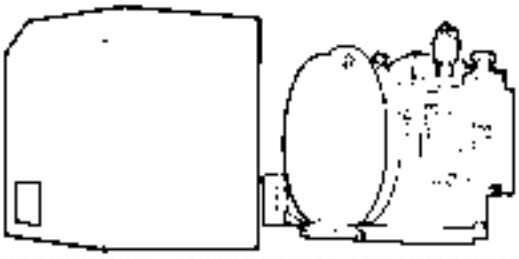

53 INITIAL LIGHTING - continued

CENTRAL HEATING

1. Set the CH/HW switch (B) to CH & HW, and the burner on/off switch (C) to ON. Check that:
   a. The pump is running.
   b. The diverter valve energises - no resistance should be felt when the manual lever is moved by hand.
   c. The fan starts and the main burner cross-lights smoothly at maximum rate.
   Note. *The burner may fire initially at low rate but should increase to maximum rate after 1-2 minutes.*
2. Operate the boiler for 10 minutes to stabilise the burner temperature.
3. The boiler CH control operates at a burner pressure of 16.0mb (6.4 in.w.g.). Should it be necessary to adjust the burner pressure remove the plastic cover (refer to Frame 52) then turn the outer adjusting screw (H) in either direction until the correct pressure is achieved.

Note. *Burner setting pressures and boiler performance details are given in Tables 2 & 3 and on the data plate, located on the control support frame.*

DOMESTIC HOT WATER

1. With the burner firing as above, fully open a DHW tap and set the CH/HW switch (B) to HW ONLY. Check that:
   a. The pump continues to run.
   b. The diverter valve de-energises.
   c. The burner continues to fire at maximum rate.
2. Reduce the DHW draw-off rate to the minimum required to keep the boiler firing. The DHW control operates at a burner pressure of 6.0mb (2.4 in.w.g.). Should it be necessary to adjust the burner pressure turn the inner adjusting screw (N) in either direction until the desired burner pressure is achieved. Refer to Frame 52.

   Note. *Recheck the maximum burner pressure (CH) after setting the minimum burner pressure (HW) and adjust as necessary.*
3. Turn off the DHW tap and set the burner on/off switch to OFF.

54 GENERAL CHECKS

DOMESTIC HOT WATER MODE

1. Set the CH/HW switch (B) to HW ONLY and the burner on/off switch (C) to ON. The pump should start circulating water through the DHW calorifier and the burner should fire at minimum rate for about 3 minutes, preheating the DHW calorifier.
   a. If no DHW is drawn off the boiler will fire periodically for a short time to maintain the calorifier temperature.
   b. The DHW preheat operates 24 hours a day unless a programmer is fitted, when it can be timed.
2. Fully open a DHW tap. Check that the pump starts and the main burner fires at maximum rate. Check that DHW is delivered.
3. Reduce the DHW draw-off rate to the minimum required to keep the boiler firing and check that the burner pressure reduces to low rate in response to DHW temperature rise.
4. Close the DHW tap and check that the main burner extinguishes and the pump stops.

CENTRAL HEATING AND DOMESTIC HOT WATER MODE

1. Set the CH/HW switch (B) to CH & HW. Check that the main burner fires at the maximum rate.
2. Fully open a DHW tap and check that the hot water is delivered.
3. Close the DHW tap and turn off the CH/HW switch (B). Check that the main burner extinguishes and the pump stops.
4. Check the correct operation of the programmer, if fitted, and all other system controls. Operate each control separately and check that the main burner responds.
5. Remove the pressure gauge and tube. Tighten the sealing screw in the pressure test point, ensuring that a gas-tight seal is made.

WATER CIRCULATING SYSTEM

1. With the system COLD, check that the initial pressure is correct to the system design requirements. For pre-pressurised systems this should be 1.0 bar (14.5 psi).
2. Set the RED fill pressure indicator on the pressure gauge (E) to the initial system pressure. Refer to Frame 4 'Filling'.
3. With the system still hot, examine all water connections for soundness. The system pressure will increase with temperature rise but should not exceed 2.5 bar (36.6 psi).
4. With the system still hot, turn off the gas, water and electricity supplies to the boiler and drain down, in order to complete the flushing process.
5. Refill and vent the system, as described in 'Guide to System Requirements', clear all air locks and again check for water soundness.
6. Reset the system initial pressure to the design requirement.
7. Balance the system.

FINALLY

1. Fit the Combi module cover. Refer to Frame 52.
2. Refit the controls casing pod and tighten the 2 front fixing screws.
3. Set the controls to the user's requirements and close the pod door.
   - The design water output temperatures are as follows:

Central Htg	82^{0}C maximum
Domestic Hot Water	70^{0}C approx at 3.5 l/min (nominal) draw-off 35^{0}C temperature rise at 9.6 l/min draw-off

   - If a programmer is fitted refer to the programmer instructions.
4. Check that the casing is seated correctly and is compressing the sealing strip all around the casing.

IMPORTANT.

It is absolutely essential to ensure, in practice, that products of combustion discharging from the terminal cannot re-enter the building, or any other adjacent building, through ventilators, windows, doors, other sources of natural air infiltration or forced ventilation/air conditioning.

If this should occur the appliance must be TURNED OFF IMMEDIATELY and the local gas supplier called to investigate.

WARNING. Do not operate the boiler with the casing removed.

55 HANDING OVER

After completing the installation and commissioning of the system the installer should hand over to the householder by the following actions:

1. Hand the User's Instructions to the Householder and explain his or her responsibilities under the Gas Safety (Installation and Use) Regulations 1994.
2. Draw attention to the Lighting Instruction label affixed to the controls pod door.
3. Explain and demonstrate the lighting and shutting down procedures.
4. The operation of the boiler and the use and adjustment of ALL system controls should be fully explained to the Householder, to ensure the greatest possible fuel economy consistent with household requirements of both heating and hot water consumption.
   Advise the User of the precautions necessary to prevent damage to the system and to the building, in the event of the system remaining inoperative during frosty conditions.
5. Explain the function and the use of the boiler heating and domestic hot water controls.
6. Explain the function of the boiler overheat thermostat and emphasise that if cutout occurs, the boiler should be turned off and a CORGI registered installer consulted.
7. Explain and demonstrate the function of time and temperature controls, radiator valves etc., for the economic use of the system.
8. If any Programmer Kit is fitted, then draw attention to the Programmer Kit User's Instructions and hand them to the Householder.
9. **Loss of system water pressure**

   Explain that the dial on the Combi module indicates the central heating system pressure and that if the normal COLD pressure of the system (indicated by the red arrow in the dial) is seen to decrease over a period of time then a water leak is indicated. In this event a CORGI registered installer should be consulted.

   DO NOT FIRE THE BOILER IF THE PRESSURE HAS REDUCED TO ZERO FROM THE ORIGINAL SETTING
10. Stress the importance of regular servicing by a CORGI registered installer and that a comprehensive service should be carried out AT LEAST ONCE A YEAR.

spares & parts online IBASIS.CO.UK

56 SCHEDULE

To ensure the continued safe and efficient operation of the appliance it is recommended that it is checked at regular intervals and serviced as necessary. The frequency of servicing will depend upon the installation condition and usage, but should be carried out at least annually. It is the law that any service work must be carried out by a CORGI registered installer.

a. Light the boiler and, using the flue sampling point (provided on the top RH side of the back panel), carry out a pre-service check, noting any operational faults.

b. Clean the main burner.

c. Clean the heat exchanger.

d. Clean the main and pilot injectors.

e. Remove any debris from inside the base of the casing.

f. Check that the flue terminal is unobstructed and that the flue system, including the inner cover, is sealed correctly.

g. If the appliance has been installed in a compartment, check that the ventilation areas are clear.

The servicing procedures are covered more fully in Frames 57 to 63 and must be carried out in sequence.

WARNING. Disconnect the electrical supply and turn off the gas supply.

IMPORTANT. After completing the servicing or exchange of components always test for gas soundness and carry out functional checks as appropriate.

When work is complete the casing MUST be correctly refitted, ensuring that a good seal is made.
The boiler must NOT be operated if the casing is not fitted.

Note. *In order to carry out either servicing or replacement of components, the boiler casing must be removed (Frame 57).*

57 BOILER CASING REMOVAL

Combi Module Cover

Release the securing screw and withdraw the cover.

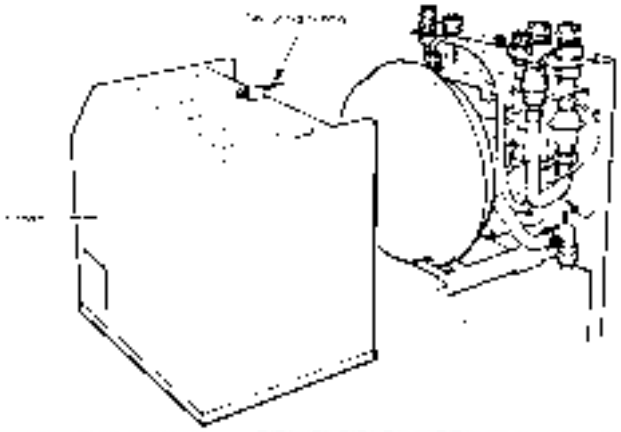

Boiler Casing

1. Open the controls pod door.

2. Release the 4 captive screws at the top and bottom of the casing. Lift the casing off the boiler and retain in a safe place .

3. Isolate the gas supply at the service cock fitted to the boiler. Refer to Frame 64.

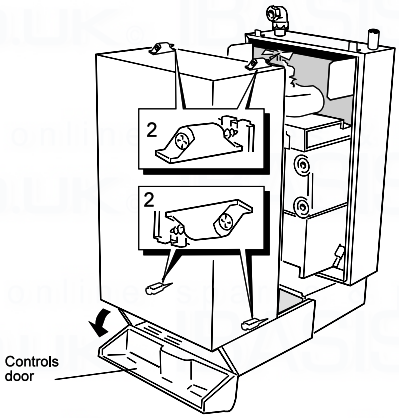

58 BURNER AND AIR BOX REMOVAL

1. Remove the screw retaining the front burner support bracket to the combustion chamber. Remove the M5 pozi-screw situated at the LH bottom rear of the burner and pull the burner downward to disengage the retention tab. Remove burner to a safe place for inspection and cleaning.

2. Remove the control box fixing screw. Pull the box forward and downward to disengage.

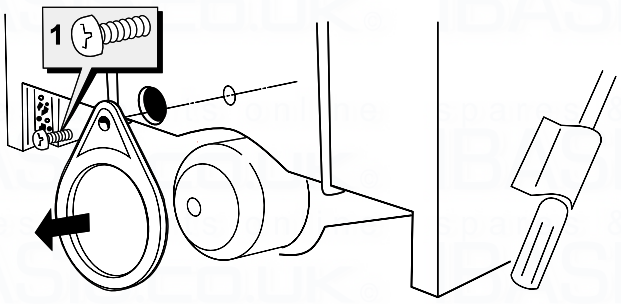

3. Pull the HT lead connection off the printed circuit board and pull the lead upwards through the bottom panel grommet.

4. Remove the 4 screws retaining the air box /pilot assembly to the vertical manifold and carefully remove the assembly.

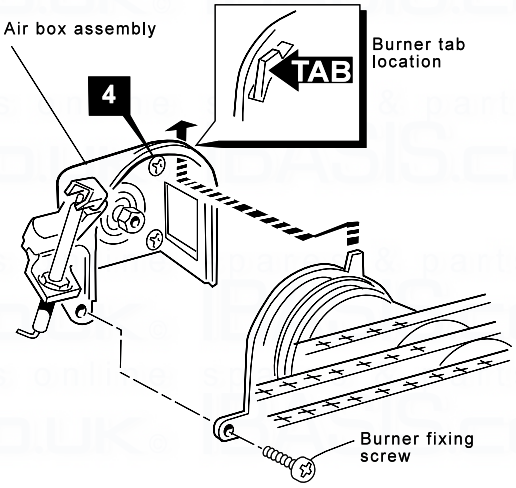

59 CLEANING THE FAN ASSEMBLY / THE FLUEWAYS

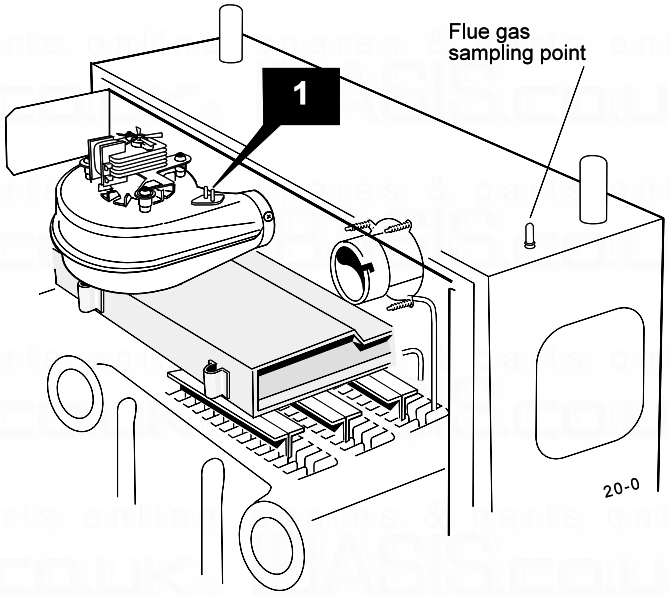

1. Remove the 2 silicon rubber tubes from the fan sensing points.
2. Disconnect the fan leads and the fan earth connection.

3a. **Rear flue**
Slacken the M4 screw securing the flue connector to the fan. Disconnect the connector from the fan and slide into the flue.

3b. **Side flue**
Slacken off two M4 screws securing the flue elbow and flue connector. Disconnect the flue connector from the elbow and slide into the flue. Remove the flue elbow.

4. Disconnect the silicon rubber tube from the rear of the collector hood.
5. Slacken the two M5 nuts on the front tie rods, releasing the tie rods from the combustion chamber.
6. Remove the M5 central fixing screw at the rear of the collector hood and remove collector hood/fan assembly.
7. Check that the fan impeller runs freely. Remove any debris from the impeller with a soft brush.
8. Remove the flue baffle clips and remove the flue baffles.
9. Remove all loose deposits from the heat exchanger, particularly between the fins, using a suitable brush.
10. Reassemble in reverse order, ensuring that the fan leads, fan earth connection and 3 sensing tubes are reconnected.

60 CLEANING THE BURNER AND PILOT ASSEMBLY

1. Brush off any deposits that may have fallen on to the burner head, ensuring the flame ports are unobstructed, and remove any debris that may have collected.
   Note. *Brushes with metallic bristles must not be used.*
2. Remove the main burner injector and ensure there is no blockage or damage. Clean or renew as necessary.
3. Refit the injector, using an approved jointing compound sparingly.
4. Inspect the pilot burner and ignition / detection electrode. Ensure that they are clean and in good condition. Check that:
   - **a.** The pilot burner injector is not blocked or damaged. Refer to Frame 68 for removal details.
   - **b.** The pilot burner is clean and unobstructed.
   - **c.** The ignition / detection electrode is clean and undamaged.
   - **e.** The ignition / detection lead is in good condition.
   - **f.** The spark gap is correct (Frame 68). Clean or renew as necessary.

Note. *The pilot shield is located around the pilot assembly bracket and is located by the electrode retaining nut.*

61 RE-ASSEMBLY

Reassemble the boiler in the following order:

1. Refit the flue baffles.
2. Inspect the collector hood rope gasket and replace, if necessary, ensuring that the self adhesive rope is fitted centrally onto the lip of the collector hood /fan assembly.

   The boiler efficiency will be adversely affected if incorrectly fitted.

   Refit the collector hood and retain with the 2 front tie rods and the rear central fixing screws. Tighten the nuts and screw. Ensure that the sealing gasket is compressed.
3. Refit the 3 sensing tubes and reconnect the electrical leads.
4. Refit the air box assembly and burner. Ensure that the burner front fixing is refitted.
5. Refit the control box.
6. Reconnect the gas supply and the electrical wiring. Refer to Frames 41 and 46.
7. Check the sightglass in the boiler casing. Clean or renew as necessary. Refer to Frame 65.
8. Check for gas soundness. Check the gas service cock and pressure test point.
9. Refit the boiler casing and tighten the 4 captive screws.

   IMPORTANT.

   When work is complete the casing must be correctly refitted. Ensure that a good seal is made.
10. Close the controls pod door.

62 CLEANING THE DOMESTIC HOT WATER (DHW) FILTER

1. Remove the DHW flow switch. Refer to Frame 79.

2. Prise the filter from the housing in the flow switch inlet and clean or renew as necessary.

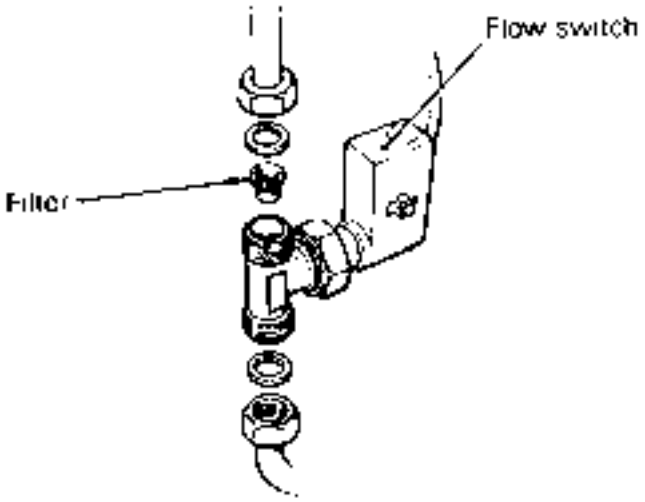

63 GAS PRESSURE ADJUSTMENT

PILOT

Light the boiler and check that the pilot flame envelops the ignition / detection electrode.

The pilot is factory set to maximum and no further adjustment is possible. If, however, the pilot flame length is incorrect then remove and inspect the pilot injector. Refer to Frame 68.
Relight in accordance with 'Initial lighting', Frames 52 and 53.

MAIN BURNER

After any servicing, reference should be made to Table 2, which quotes details of the rated output with the related burner setting pressure and the heat input.

Any required adjustments should be made by using the pressure adjustment screw.

Refer to 'Initial Lighting', Frame 52.

64 GENERAL

When replacing any component:

1. Isolate the electricity supply.
2. Turn OFF the gas supply.
3. Remove the boiler casings. Refer to Frame 57.

IMPORTANT. When work is complete the casing must be correctly refitted, ensuring that a good seal is made.

Note. *In order to assist fault finding, the control box printed circuit board is fitted with 4 indicator lights which represent the following boiler conditions:*

Neon I_1	Air pressure switch made.
Neon I_2	Fan voltage indication
Neon I_3	Main supply to PCB 25B.
Neon SGI	Flashes to indicate spark operation (stops after detection).

THE BOILER MUST NOT BE OPERATED IF THE CASING IS NOT FITTED

65 SIGHTGLASS REPLACEMENT

1. Refer to Frame 64.
2. Unfasten the 2 nuts and washers holding the sightglass assembly to the casing front panel.
3. When fixing the new assembly ensure that the parts are in the correct order. The frame must have the return edge at the bottom.
4. Retighten the 2 nuts to ensure an airtight seal. DO NOT OVERTIGHTEN.
5. Replace the boiler casing. Refer to Frame 52.

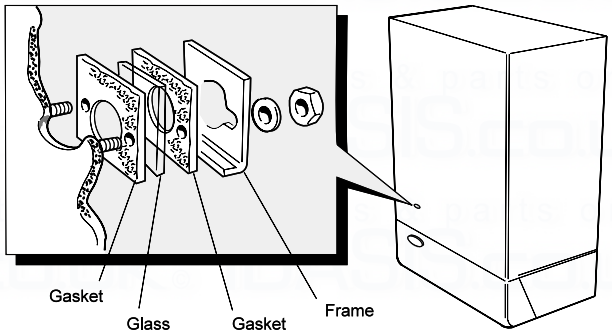

66 DHW PREHEAT, CONTROL, OVERHEAT AND CH CONTROL THERMOSTAT REPLACEMENT

1. Refer to Frame 64.
2. Release the retaining screw and hang the CH expansion vessel in the servicing position. Refer to Frame 45.
3. Remove the 2 securing screws and withdraw the faulty thermostat.
4. Pull off the 2 electrical leads from the thermostat.
5. Fit the new thermostat and re-assemble in reverse order (polarity is immaterial).

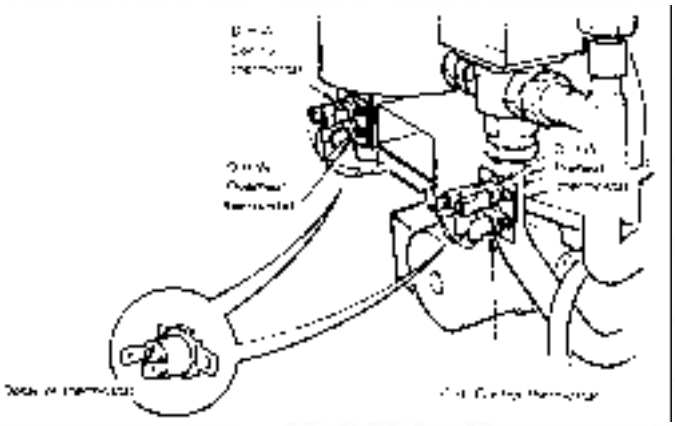

67 CH OVERHEAT THERMOSTAT REPLACEMENT

Refer also to Frame 64

1. Remove the control box fixing screw.

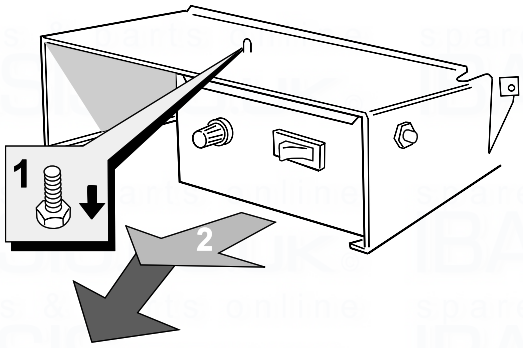

2. Pull the box forward and downward to disengage.
3. To remove the overheat thermostat pull off the electrical connections at the thermostat. Remove the backnut retaining the thermostat to the bracket. Remove the thermostat from the heat exchanger pocket.
4. Reassemble in reverse order.

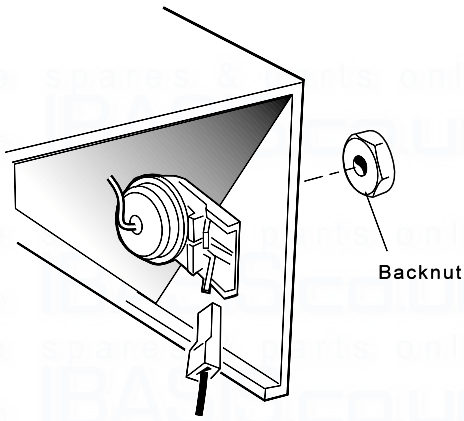

68 PILOT BURNER REPLACEMENT

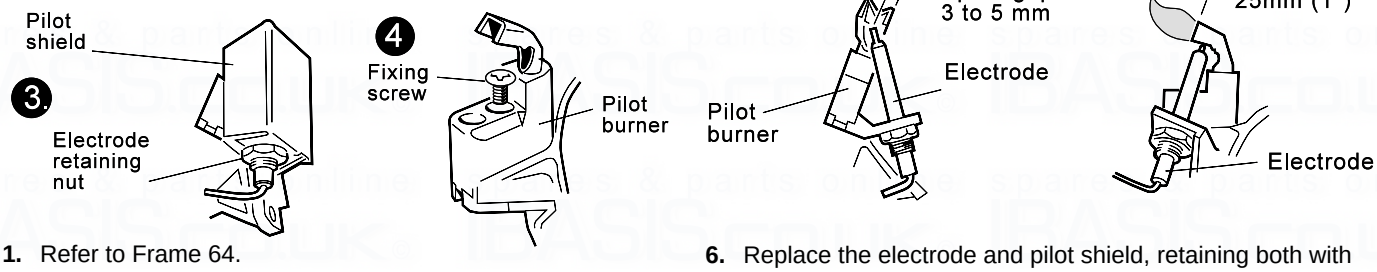

1. Refer to Frame 64.
2. Remove the burner and air box assembly. Refer to Frame 58.
3. Remove the electrode retaining nut and remove the pilot shield and electrode.
4. Unscrew the central pilot fixing screw and lift the pilot clear of the pilot injector. The pilot injector may now be unscrewed if required.
5. Replace the pilot burner and retain with the M4 screw previously removed. Ensure that the copper sealing washer is replaced when refitting the pilot injector.
6. Replace the electrode and pilot shield, retaining both with the electrode nut. Check the spark gap.
7. Replace the box assembly.
8. Replace the burner.
9. Replace the boiler casing.
10. The pilot is factory set to maximum and no further adjustment is possible. Ensure that there is an inlet pressure of 20 mbar available. Also check burner ignition and cross-lighting.

69 SPARK ELECTRODE AND LEAD REPLACEMENT

1. Refer to Frame 64.
2. Remove the burner and air box assembly. Refer to Frame 58.
3. Remove the electrode retaining nut.
4. Remove the pilot shield.
5. Remove the spark electrode and integral lead.
6. Fit the new electrode and lead in reverse order. Ensure that the pilot shield is replaced.
7. Check the spark gap. Refer to Frame 68.
8. Replace the boiler casing.
9. Check the pilot ignition.

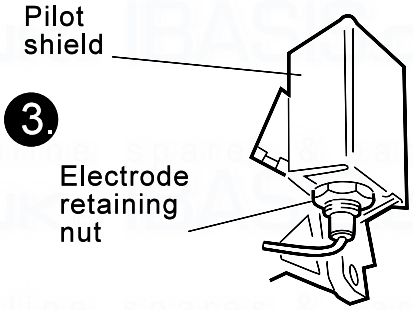

70 MAIN BURNER & MAIN BURNER INJECTOR REPLACEMENT

1. Refer to Frame 64
2. Remove the screw retaining the front burner support bracket to the combustion chamber.
3. Remove the M5 pozi screw and washer, situated at the left hand bottom rear of the burner. Pull the burner downward to disengage the retention tab and remove the burner.
4. At this stage the main burner injector can be removed, checked, cleaned or replaced as required. Ensure that an approved jointing compound is used sparingly.
5. Fit the new burner, ensuring that the retention tab is correctly located in the air box slot.
6. Refit the M5 retaining screw and washer.
7. Refit the boiler casing.
8. Check the burner for cross-lighting and flame stability.

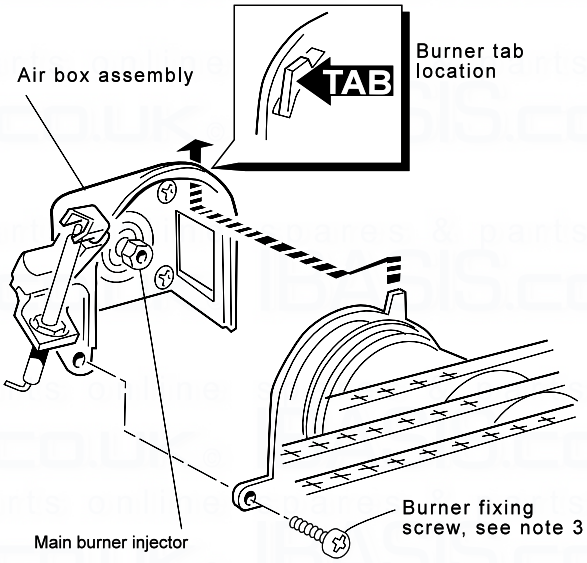

71 COMBUSTION CHAMBER INSULATION REPLACEMENT

1. Refer to Frame 64
2. Remove the burner and air box assembly. Refer to Frame 58.
3. Remove the tie rods and combustion chamber.
4. Remove the 2 side panel retaining brackets.
5. Remove the side insulation panels.
6. Remove the front and rear insulation panels.
7. Fit the new front and rear insulation panels.
8. Fit the new side panels and retain with the brackets and screws previously removed.
9. Refit the combustion chamber and tie rods.
10. Re-assemble the rest of the appliance in reverse order.

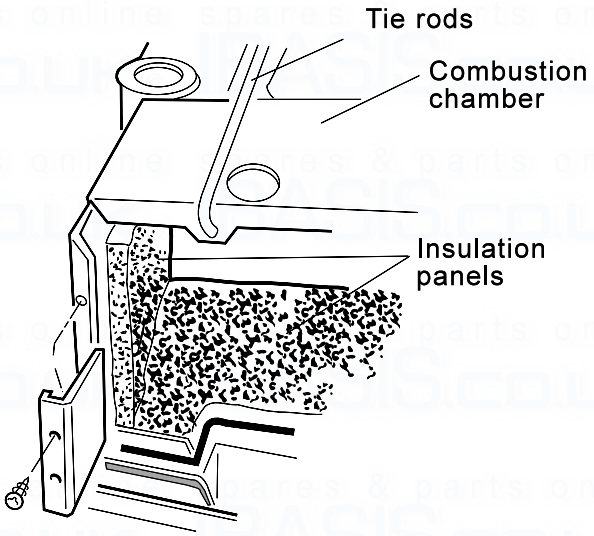

72 GAS CONTROL VALVE REPLACEMENT

Note. *Also refer to Frames 93 & 94, 'Exploded Views' , for illustration of the procedure detailed below.*

1. Refer to Frame 64.
2. Remove the burner support bracket, burner and air box assembly. Refer to Frame 58.
3. Remove the control box fixing screw. Pull the box forward and downward to disengage.
4. Remove the gas control valve electrical connections.
5. Disconnect and remove the gas union from the gas control valve.
6. Whilst supporting the gas control valve, remove the 2 screws retaining the manifold to the back panel.
7. Remove the gas control / manifold assembly.
8. Remove the 4 screws retaining the manifold to the gas control valve and fit the manifold to the new gas control valve. Ensure that the new control is fitted the correct way round (an arrow engraved on the back indicates the direction of flow).

   Note. *Remove the gas cock stub and refit into the new gas control valve. Use an approved jointing compound on the pipe stub.*
9. Reassemble in reverse order.
10. Replace the boiler casing.
11. Check the gas valve operation / gas soundness.

73 FAN REPLACEMENT

1. Remove the 2 silicon rubber tubes from the fan sensing points.
2. Disconnect the fan leads and the fan earth connection.

3a. **Rear flue:** Slacken the M4 screw securing the flue connector to the fan. Disconnect the connector from the fan and slide into the flue.

3b. **Side flue:** Slacken off two M4 screws securing the flue elbow and flue connector. Disconnect the flue connector from the elbow and slide into the flue. Remove the flue elbow.

4. Disconnect the silicon rubber tube from the rear of the collector hood.
5. Slacken the two M5 nuts on the front tie rods, releasing the tie rods from the combustion chamber.
6. Remove the M5 central fixing screw at the rear of the collector hood and remove collector hood/fan assembly.
7. Remove the three M4 screws retaining the fan to the collector hood.
8. Reassemble in reverse order, ensuring the fan leads, fan earth connection and 3 sensing tubes are reconnected.
9. Refit the boiler casing.
10. Check the boiler operation.

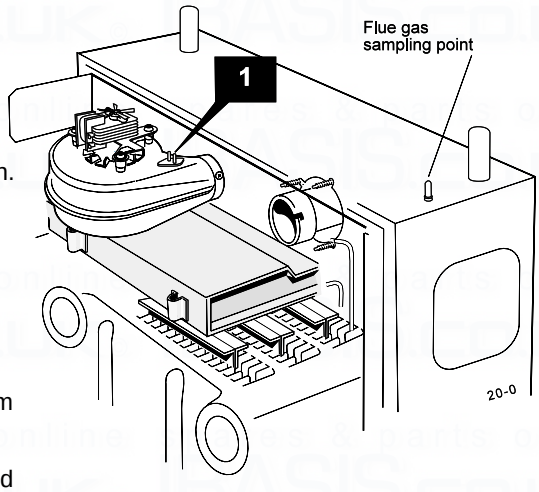

74 AIR PRESSURE SWITCH (APS) REPLACEMENT

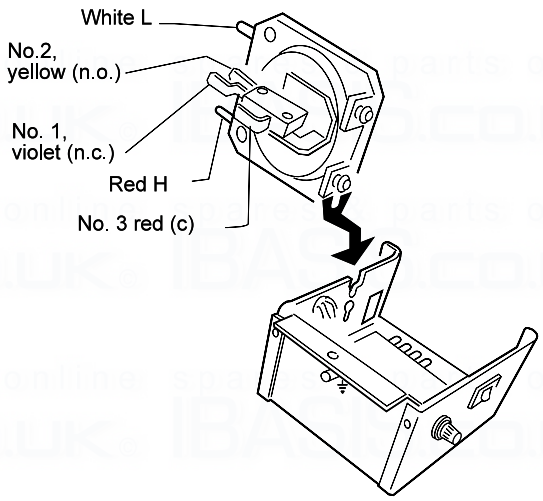

1. Refer to Frame 64.
2. Remove the control box fixing screw. Pull the box forward and downward to disengage.
3. Pull off both sensing tubes from the APS and remove the cover.
4. Remove the 3 electrical connections from the APS.
5. Remove the switch from the controls box.
6. Connect the new switch in reverse order.
7. Refit the control box.
8. Refit the boiler casing.
9. Check the boiler operation.

75 BURNER ON/OFF AND CH/HW SWITCH REPLACEMENT

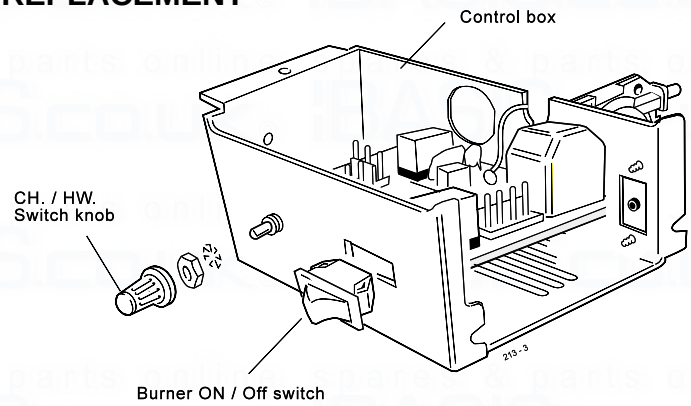

1. Refer to Frame 64.
2. Remove the control box fixing screw, pull the box forward and downward to disengage.
3. Disconnect the 2 electrical leads from the switch.
4. **BURNER ON/OFF SWITCH ONLY**
   Compress the retaining clips and prise the defective switch out of the front panel.
   CH / HW SWITCH ONLY
   a. Pull off the knob.
   b. Remove the backnut and withdraw the switch.
5. Connect the new switch in reverse order. Ensure that the switch is the correct way round, i.e. with the terminals towards the right, as shown (burner on/off switch) or that the switch is correctly orientated (CH/HW switch). Polarity is immaterial
6. Refit the boiler casing.
7. Check the switch operation.

76 PRINTED CIRCUIT BOARD (PCB) REPLACEMENT

Note. *Refer to Frames 93 and 94, 'Exploded Views' for illustration of the procedure detailed below.*

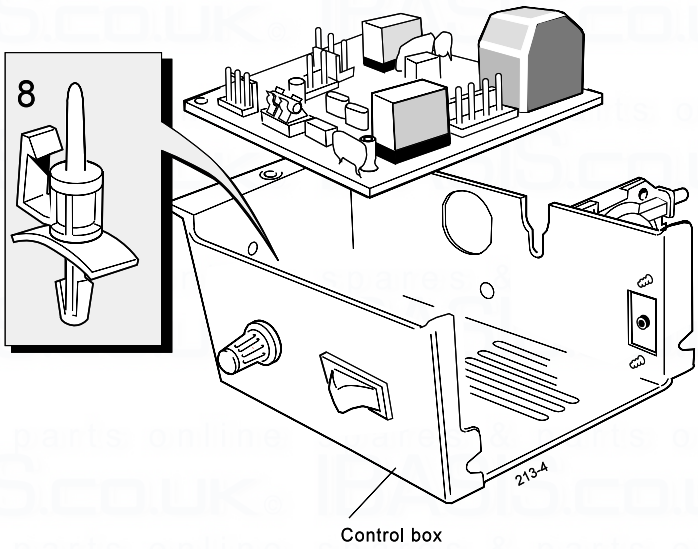

1. Refer to Frame 64.
2. Remove the control box fixing screw. Pull the box forward and downward to disengage.
3. Remove the HT lead from the PCB
4. Remove the 4 push-in electrical connectors from the PCB.
5. Remove the neutral wire on the PCB from its connection to the back of the socket inside the control box.
6. Remove the earth wire on the PCB from its connection to the earth stud inside the control box.
7. Remove the 2 connections from the on/off switch and remove the switch.
8. Compress the barbs on the PCB stand-offs to release the PCB from the box.
9. Fit the new PCB and reassemble in reverse order.
10. Refit the boiler jacket.
11. Check the operation of the boiler.
12. Check the ignition operation.

77 LOGIC PCB 27 REPLACEMENT

1. Refer to Frame 64 (The Combi module cover only need be removed.)
2. Release the retaining screw and hang the CH expansion vessel in the servicing position. Refer to Frame 45.
3. Withdraw the PCB and unplug the 8 electrical leads (A to H).
4. Fit the new PCB 27 and re-assemble in reverse order.

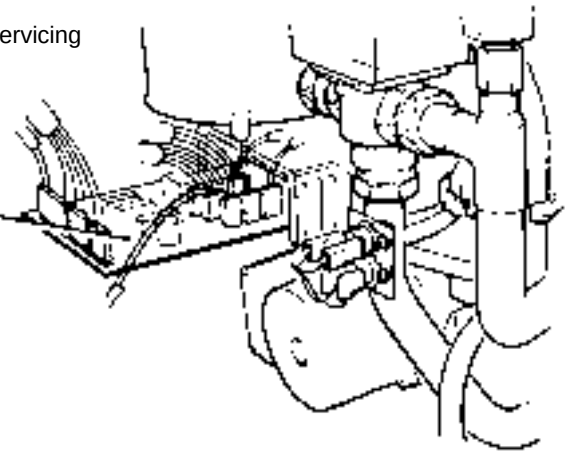

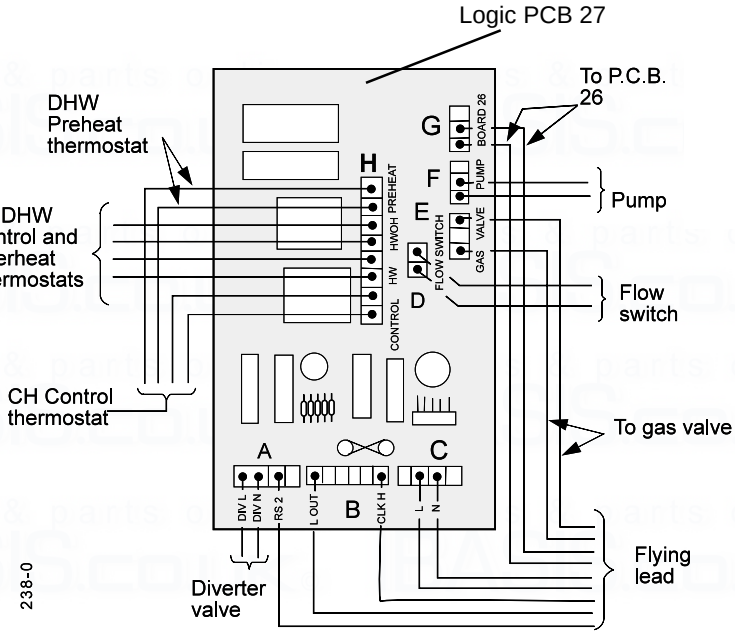

78 DIVERTER VALVE ACTUATOR REPLACEMENT

1. Refer to Frame 64 (The Combi module cover only need be removed.)
2. Release the retaining screw and hang the CH expansion vessel in the servicing position. Refer to Frame 45.
3. Disconnect the diverter valve at the inline connector.
4. Release the captive screw (A) and lift off the valve cover.
5. SET THE MANUALLY OPERATED VALVE LEVER TO *OPEN.*
6. Release the 2 captive screws (B) and lift the actuator off the valve body.

   Note. *At this stage, if required, the Syncron motor may be replaced. Refer to the instructions supplied with the replacement motor.*
7. Fit the new actuator. PRESET TO THE OPEN POSITION and reassemble in reverse order.

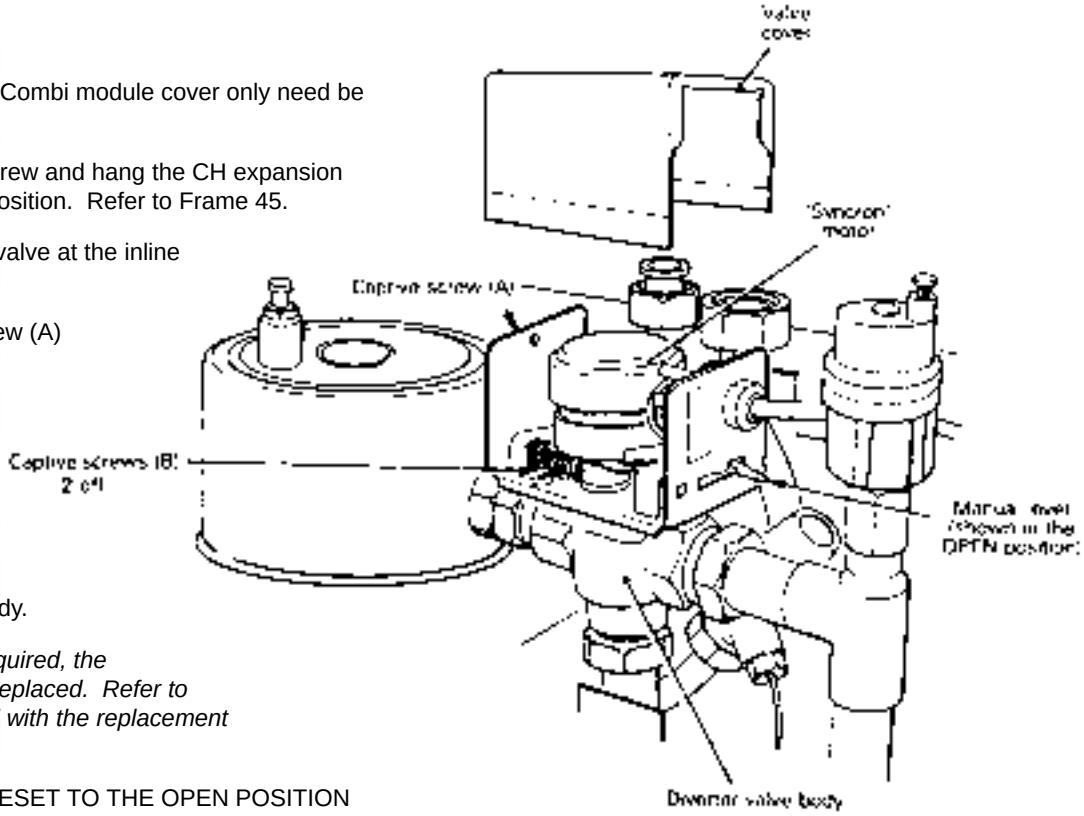

79 DHW FLOW SWITCH REPLACEMENT

1. Refer to Frame 64 (the Combi module cover only need be removed).
2. Release the retaining screw and hang the CH expansion vessel in the servicing position. Refer to Frame 45.
3. Disconnect the flow switch lead from the Logic PCB 27.
4. Remove the 2 securing screws and withdraw the pipe support bracket.
5. Close the DHW isolating valve.
6. Open the lowest DHW draw-off tap.
7. Drain any residual water into a receptacle via the DHW drain point.
8. Undo the DHW outlet pipe union nuts A & B and move the pipe aside.
9. Undo the DHW inlet pipe union nuts C & D and withdraw the switch assembly.
10. Transfer the pipes and DHW filter. Refer to Frame 80.
11. Fit the new flow switch complete with new sealing washers, ensuring that the switch is fitted the right way round. An arrow on the switch head indicates the direction of flow (downward).
12. Re-assemble in reverse order.

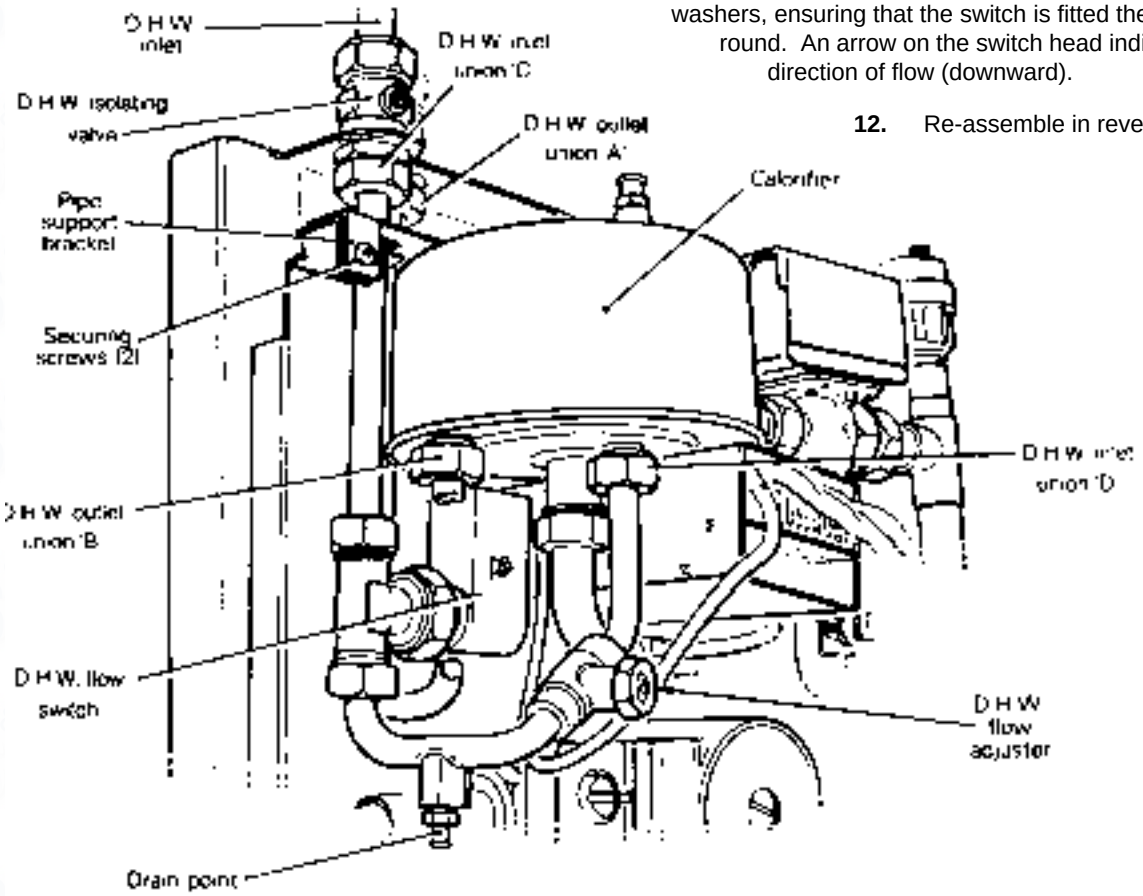

80 DHW FILTER REPLACEMENT

1. Refer to Frame 64 (The Combi module cover only need be removed).
2. Remove the DHW flow switch. Refer to Frame 79.
3. Prise the filter from the housing in the flow switch inlet, and clean or renew as necessary.
4. Re-assemble in reverse order.

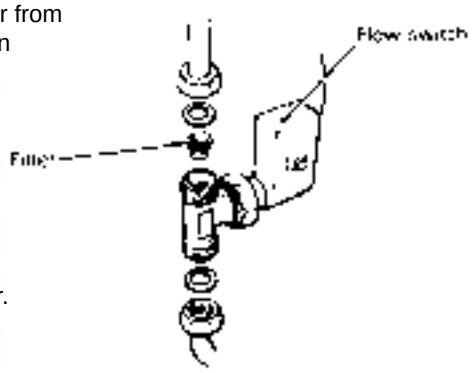

81 DRAINING THE BOILER

IMPORTANT.
In order to replace the components in Frames 82 to 90 it is necessary to drain the boiler.

Note. *Refer to Frames 92 and 93 (Boiler and Combi modules - exploded views) for illustration of the procedure detailed below:*

1. Refer to Frame 64.
2. Close the CH isolating valves.
3. Remove the heat exchanger drain plug, using a 3/16" Allen key, and drain the water into a suitable receptacle.
4. Refit the drain plug, using a suitable jointing compound.
5. In order to refill the boiler refer to Frame 4.

82 PRESSURE GAUGE REPLACEMENT

1. Refer to Frame 64.
2. Drain the boiler. Refer to Frame 81.
3. Release the retaining screw and hang the CH expansion vessel in the servicing position. Refer to Frame 45.
4. Disconnect the pressure gauge capillary from the safety valve.
5. Compress the 2 retaining lugs and withdraw the gauge from the bracket.

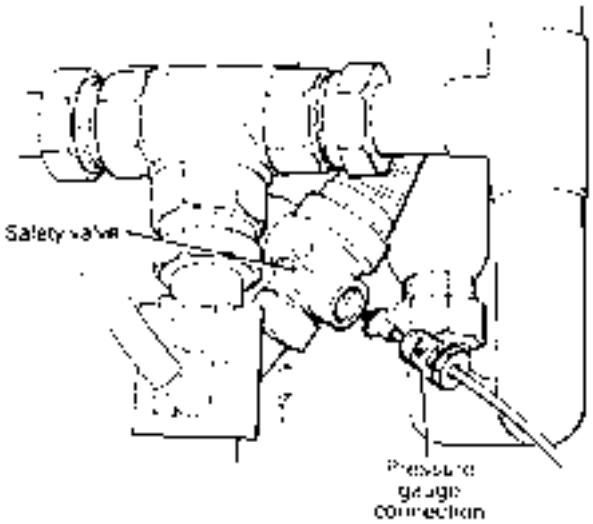

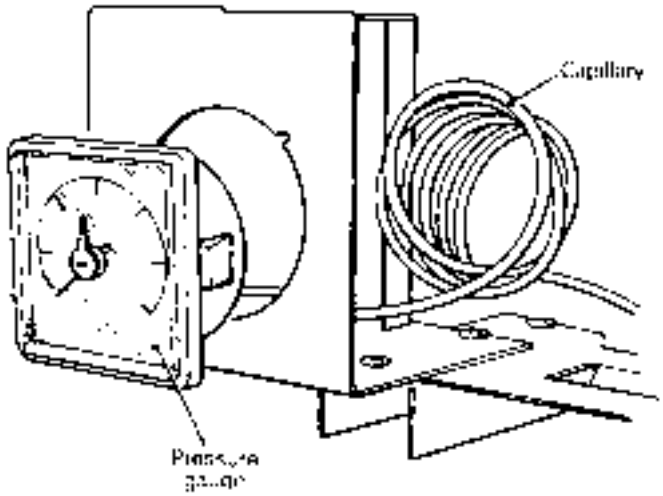

6. Fit the new gauge and re-assemble in reverse order, ensuring that:
   a. The capillary is carefully and neatly routed, as previously.
   b. The gauge is correctly orientated within the housing.

83 CH EXPANSION VESSEL REPLACEMENT

1. Refer to Frame 64.
2. Drain the boiler. Refer to Frame 81.
3. Disconnect the flexible pipe from the vessel.
4. Release the retaining screw and withdraw the expansion vessel.
5. Fit the new expansion vessel, complete with the new sealing washer, and re-assemble in reverse order.

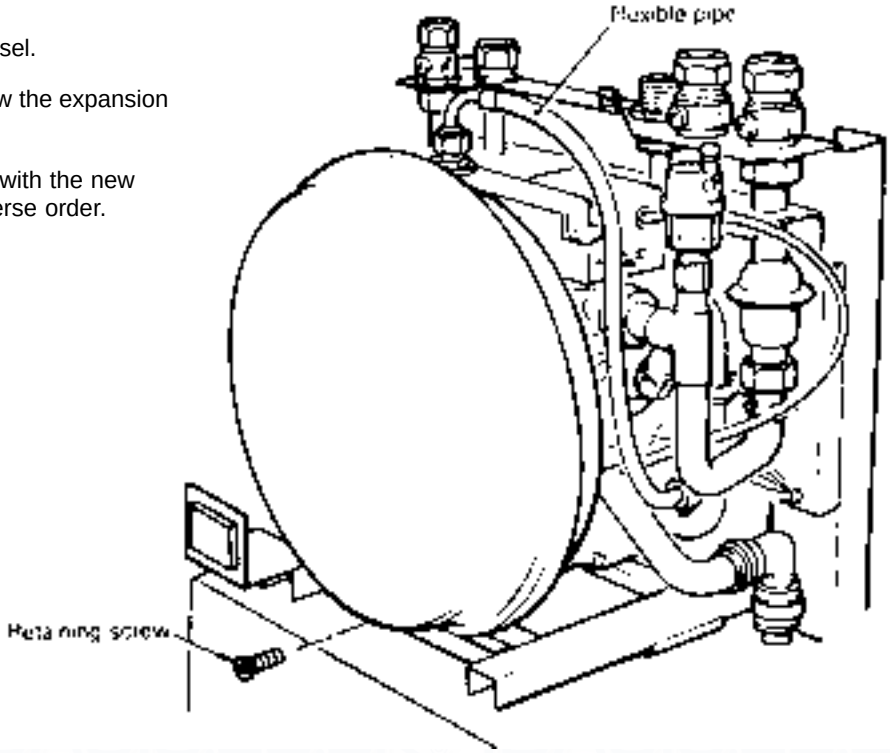

84 DHW CALORIFIER REPLACEMENT

1. Refer to Frame 64.
2. Drain the boiler. Refer to Frame 81.
3. Remove the CH expansion vessel. Refer to Frame 45.
4. Remove the 2 securing screws and withdraw the pipe support bracket.
5. Close the DHW inlet isolating valve.
6. Open the lowest DHW draw-off tap.
7. Drain any residual water into a receptacle via the DHW drain point.
8. Undo the unions on the DHW inlet pipe and move the pipe aside.
9. Slacken diverter valve union nut C.
10. Undo calorifier union nut D.
11. Undo calorifier unions A and B and withdraw the calorifier from the boiler.
12. Fit the new calorifier, complete with the new sealing washers provided, and re-assemble in reverse order.

TO DESCALE THE CALORIFIER:

a. Remove the calorifier from the boiler as described above.

b. Descale the domestic hot water coil, using a proprietary descaling agent.

c. Rinse thoroughly with clean water.

d. Re-assemble in reverse order.

WARNING. The agents are highly corrosive - ingestion or contact with skin, eyes and clothing MUST be avoided. Protective clothing should be worn and the descaling operation conducted out of doors in a well ventilated area.

Note. *The names and addresses of suppliers of suitable descaling agents are given in Frame 4.*

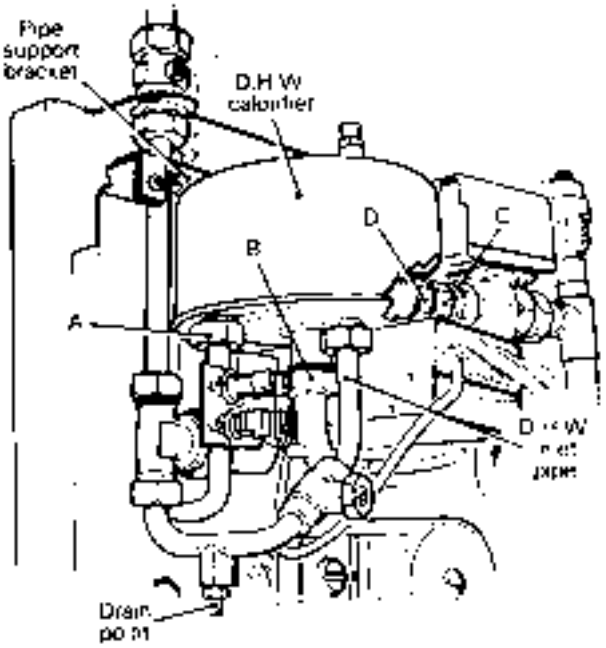

85 DIVERTER VALVE (COMPLETE) REPLACEMENT

1. Refer to Frame 64.
2. Drain the boiler. Refer to Frame 81.
3. Remove the CH expansion vessel. Refer to Frame 45.
4. Remove the automatic air vent. Refer to Frame 88.
5. Disconnect the diverter valve lead at the inline connector.
6. Undo diverter valve union A and the bypass union.
7. Slacken the CH flow pipe union.
8. Undo diverter valve union B.
9. Slacken diverter valve union nut C as far back as possible.
10. Prevent union nut C from turning and undo calorifier union nut D. This will jack the diverter valve towards the right and permit its withdrawal from the boiler, complete with stub pipe.
11. Transfer the stub pipe to the new valve.
12. Fit the new diverter valve and re-assemble in reverse order.

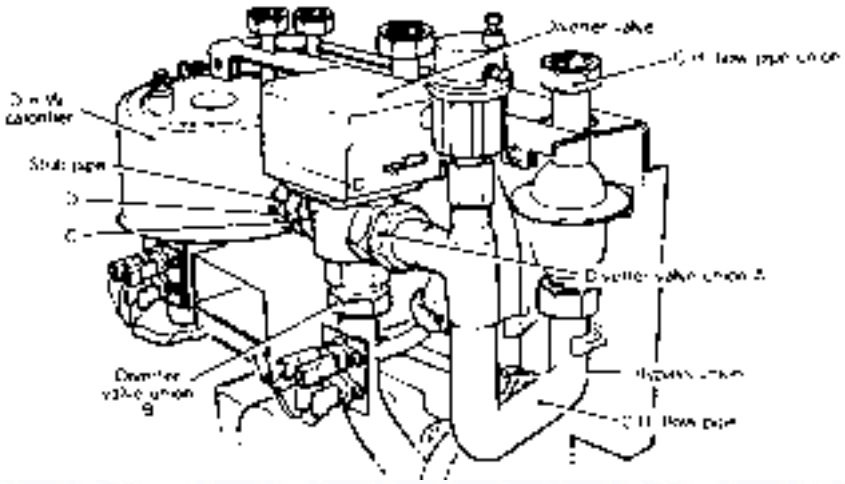

86 PUMP REPLACEMENT

1. Refer to Frame 64.
2. Drain the boiler. Refer to Frame 81.
3. Remove the CH expansion vessel. Refer to Frame 45.
4. Disconnect the pressure gauge capillary from the safety valve. Refer to Frame 82.
5. Slacken the 2 securing screws and remove the CH expansion vessel support bracket. Refer to Frame 45.
6. Remove the pump terminal box cover and disconnect the electrical leads.
7. Slide the cable entry out and withdraw the cable from the terminal box.

Note. ***If required, the PUMP HEAD ONLY may now be replaced*.**

a. Remove the 4 socket screws and withdraw the pump head.

b. Fit the new head and re-assemble in reverse order.

To remove the COMPLETE pump, proceed as follows:

8. Undo the boiler return elbow unions.
9. Undo the pump return union.
10. Swing the pump to disengage the boiler return pipe from the clip and withdraw the pump, complete with return pipe.
11. Undo the pump flow union and, using one of the new gaskets provided, transfer the boiler return pipe to the new pump.
12. Fit the new pump and re-assemble in reverse order, ensuring that:

    a. The new sealing gasket provided is fitted at the pump return union.

    b. The electrical connections are correctly remade. (Refer to the diagram inside the terminal box cover).

    c. The pump selector switch cover is correctly fitted and that the switch is set at position 3.

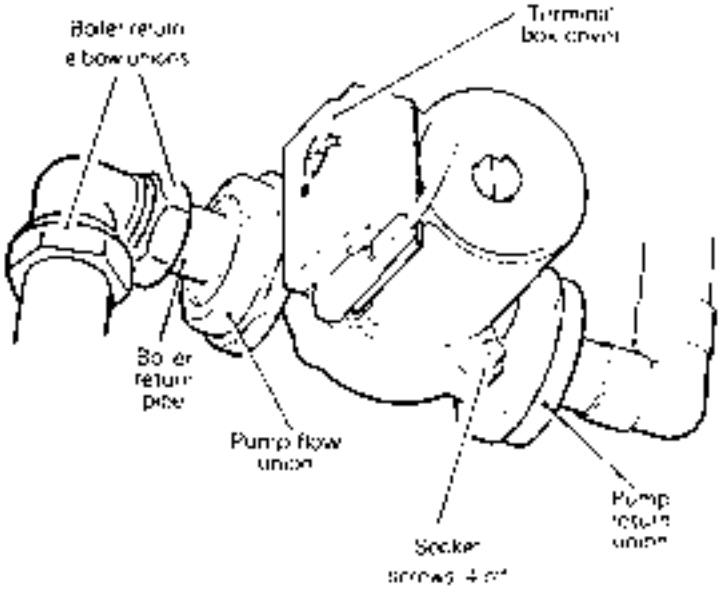

87 SAFETY VALVE REPLACEMENT

1. Refer to Frame 64.
2. Drain the boiler. Refer to Frame 81.
3. Remove the CH expansion vessel. Refer to Frame 45.
4. Remove the 2 securing screws and withdraw the pipe support bracket. Refer to Frame 45.
5. Disconnect the pressure gauge capillary from the safety valve.
6. Disconnect the overflow pipe at the bulkhead fitting on top of the wall mounting plate.
7. Undo the safety valve union and withdraw the valve, complete with the overflow pipe.
8. Transfer the overflow pipe to the new valve, ensuring that its orientation is the same as that of the previous assembly (use the arrow engraved on the side of the valve to aid realignment).
9. Fit the new safety valve, complete with the new sealing washers provided, and re-assemble in reverse order.

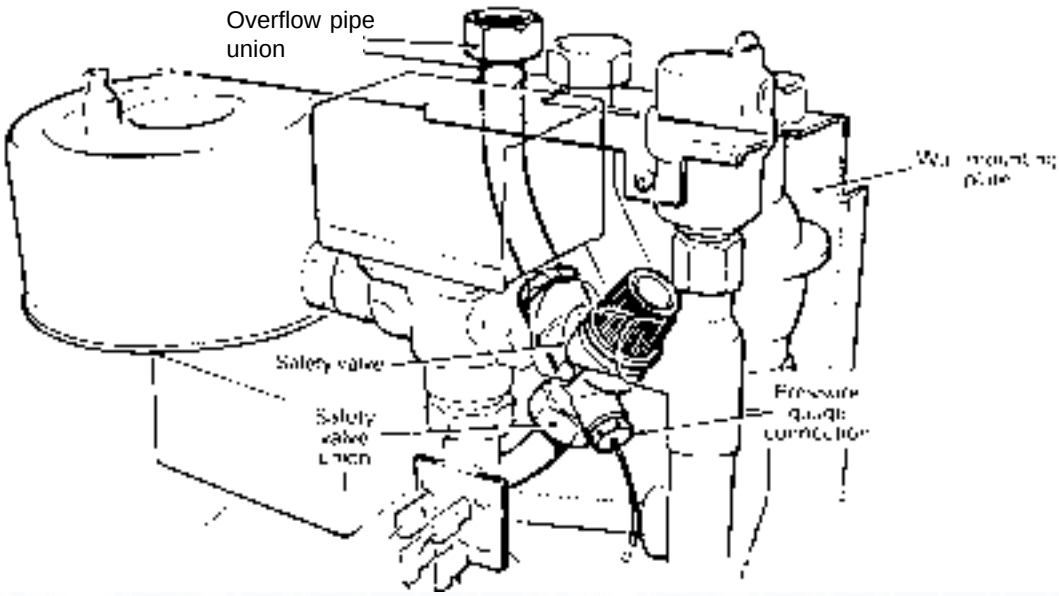

88 AUTOMATIC AIR VENT REPLACEMENT

1. Refer to Frame 64.
2. Drain the boiler. Refer to Frame 81.
3. Unscrew the automatic air vent from the boiler flow header, applying an appropriate counter-force to the boss, in order to prevent damage.
4. Fit the new air vent, using the 'O' ring provided, and re-assemble in reverse order.

IMPORTANT. Ensure that the vent cap is loose.

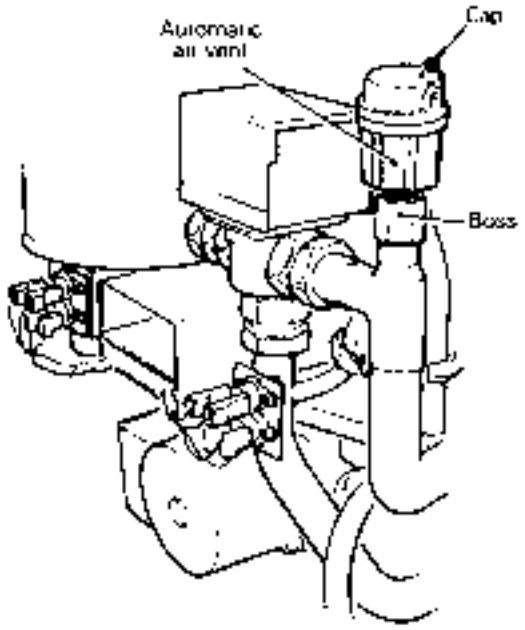

89 CH THERMOSTATIC VALVE REPLACEMENT

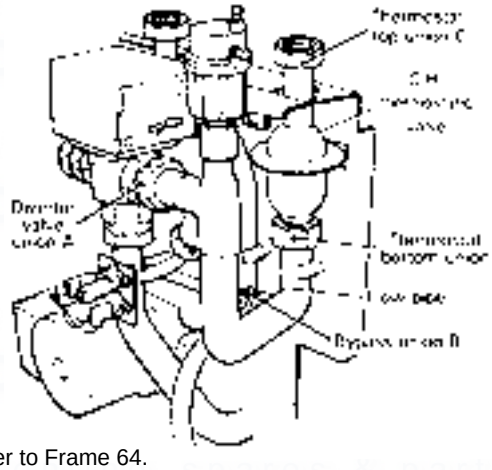

1. Refer to Frame 64.
2. Drain the boiler. Refer to Frame 81.
3. Remove the CH expansion vessel. Refer to Frame 45.
4. Remove the automatic air vent. Refer to Frame 88.
5. Remove the 2 securing screws and withdraw the pipe support bracket. Refer to Frame 79.
6. Undo the diverter valve union A, the bypass union B and the thermostat top union C.
7. Swing the flow pipe to the right to clear the diverter valve union, unclip and withdraw the pipe, complete with thermostat.
8. Transfer the flow pipe to the new thermostat and re-assemble in reverse order, using the new sealing washers provided.

90 BOILER HEAT EXCHANGER REPLACEMENT

IMPORTANT.
Before starting the removal procedure, protect the gas and electrical controls with a waterproof sheet or similar.

Note. *Refer to Frame 93 'Boiler Assembly - Exploded View' for illustration of the procedure detailed below.*

1. Drain the boiler.
2. Remove the CH expansion vessel. Refer to Frame 83.
3. Disconnect the electrical lead.
   Remove the Combi module - following the procedure (in reverse order) described in Frame 38.

   Note. An extraction tool is provided (in the Hardware Pack) to remove the push-fit brass elbow from the boiler and Combi module.
4. Remove the burner / air box assembly. Refer to Frame 58.
5. Remove the fan assembly. Refer to Frame 73.
6. Remove the combustion chamber by unscrewing the 4 tie rods.
7. Remove the thermostat sensors from the pockets on the heat exchanger.
8. Slacken 3 turns only the 4 heat exchanger / inter-panel retaining screws.
9. Lift the heat exchanger / inter-panel assembly upward and forward to disengage key hole fixings. Pull the assembly downward to clear the water pipes from the back panel.
10. Remove the 2 rubber sealing grommets from the top of the back panel to facilitate fitting the new assembly.
11. Fit the new heat exchanger assembly, complete with water pipes, and hang it on the key hole slots and screws.
12. Retighten the screws.
13. Replace the 2 rubber sealing grommets.
14. Re-assemble in reverse order.
15. Remake all water connections, ensuring that the compression fittings (if used) are correctly refitted.
16. Fully test all functions, including water and gas soundness.

91 BOILER CASING SEAL REPLACEMENT

1. Refer to Frame 64.
2. Remove the old seal from the bottom edge of the casing and also from the edges of the boiler back panel.
3. Fit the new self-adhesive seals.

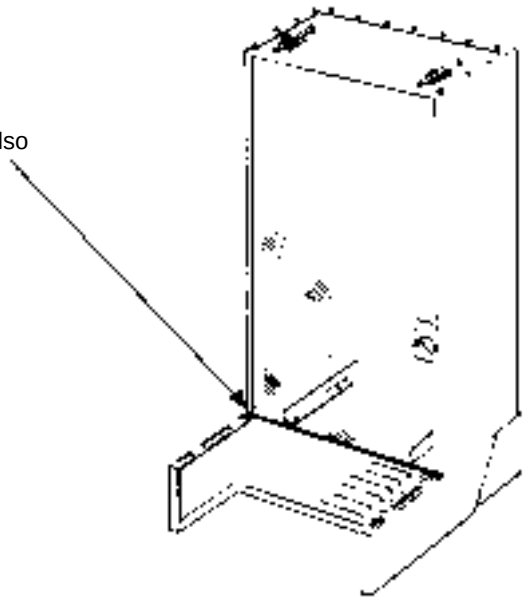

INNER VIEW OF BOILER CASING

92 COMBI MODULE - Exploded View

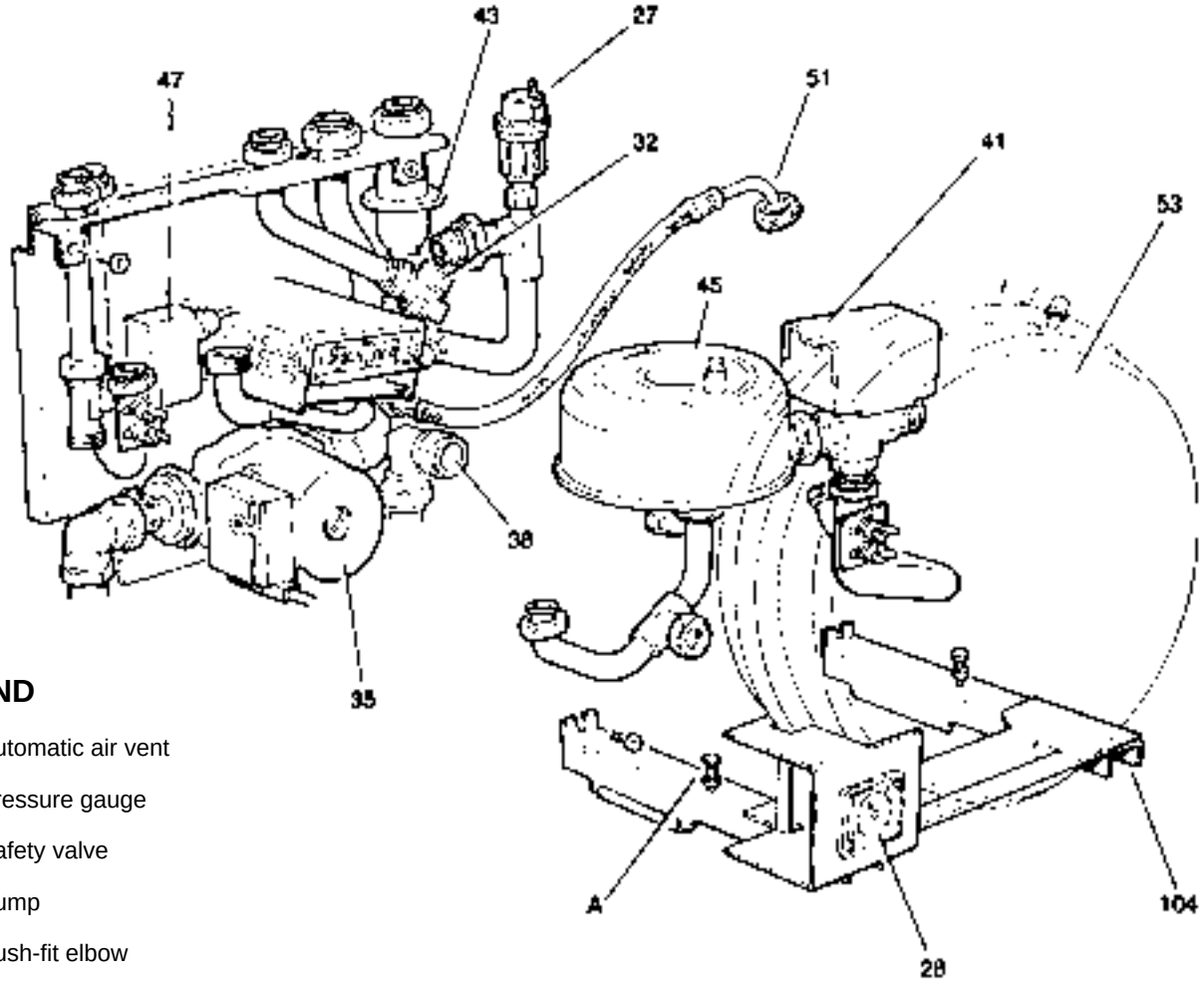

LEGEND

27. Automatic air vent

28. Pressure gauge

32. Safety valve

35. Pump

38. Push-fit elbow

41. Diverter valve

43. CH thermostatic valve

45. Calorifier

47. DHW flow switch

51. Flexible hose

53. CH expansion vessel

104. CH expansion vessel support bracket

A. Pressure gauge height adjustment screws and locking nuts - 2 off.

93 BOILER ASSEMBLY - Exploded View

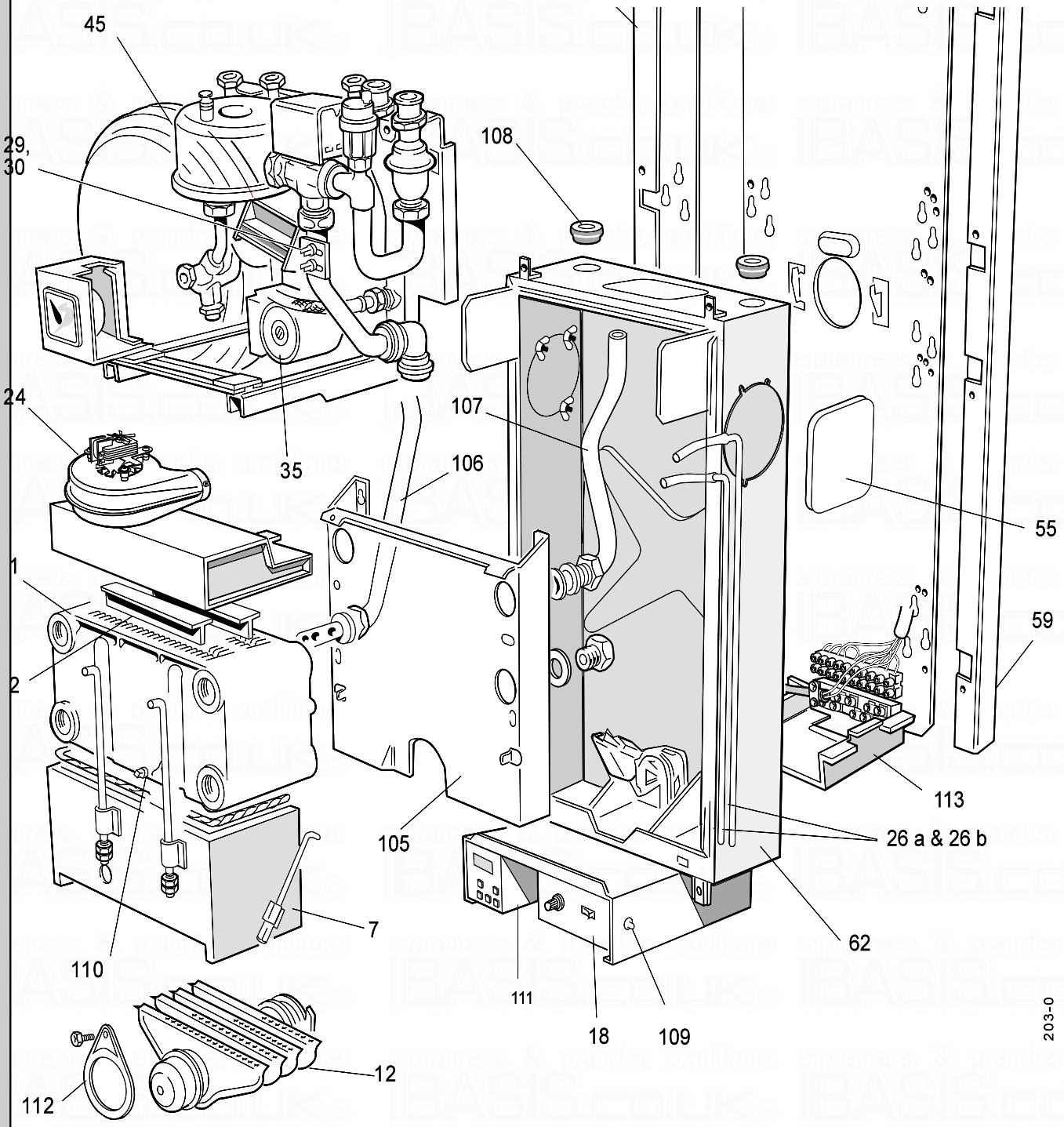

LEGEND

1. Heat exchanger
2. Flue baffles
7. Combustion chamber
12. Main burner
18. Control box
24. Fan / collector hood assembly
26a & 26b. Pressure sensing pipes
29. CH control thermostat
30. DHW preheat thermostat
35. Pump
45. Calorifier
55. Sealing plates, 2 off
58. Wall mounting plate
59. Stand-off brackets (LH & RH side)
62. Back panel
100. DHW inlet isolating valve
101. DHW outlet connection
102. Safety valve drain connection
103. CH flow and return isolating valves
105. Inter-panel
106. Pumped return pipe
107. Pumped flow pipe
108. Rubber sealing grommets
109. Overheat thermostat
110. Boiler drain point
111. Programmer (if fitted)
112. Burner support bracket
113. Terminal strip cover

94 BURNER ASSEMBLY - Exploded View

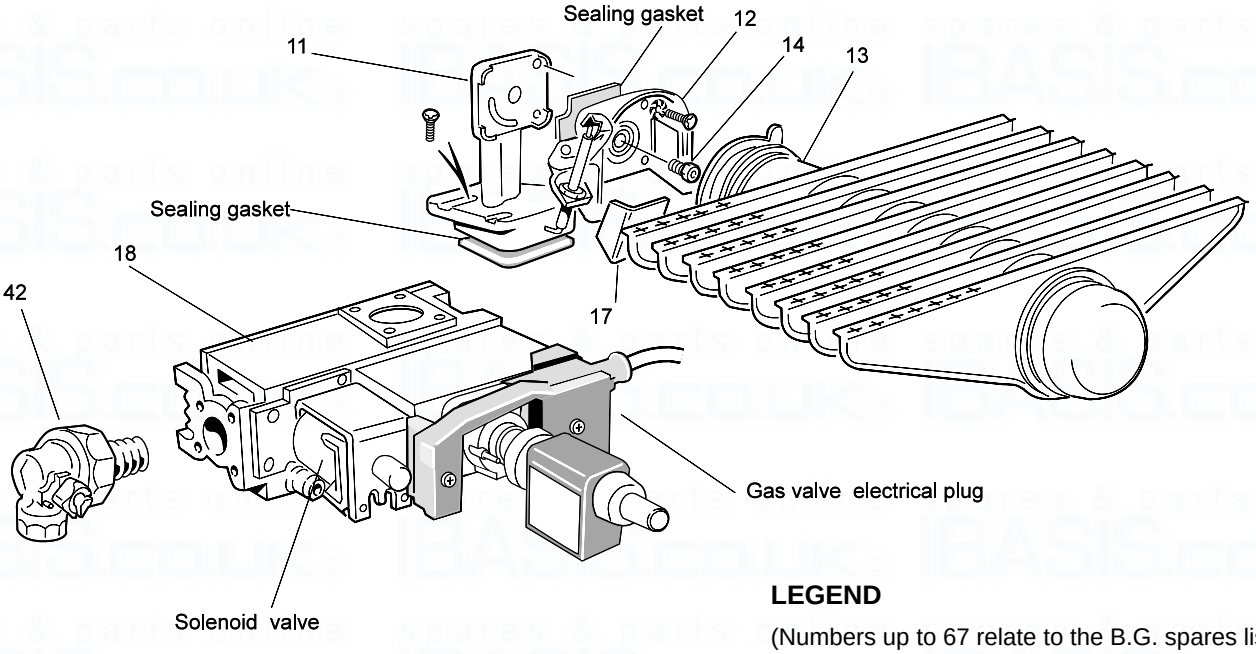

LEGEND

(Numbers up to 67 relate to the B.G. spares list)

11. Burner manifold

12. Air box and pilot assembly

13. Main burner

14. Main burner injector

17. Pilot shield

18. Gas control valve

42. Gas service cock

95 CONTROL BOX - Exploded View

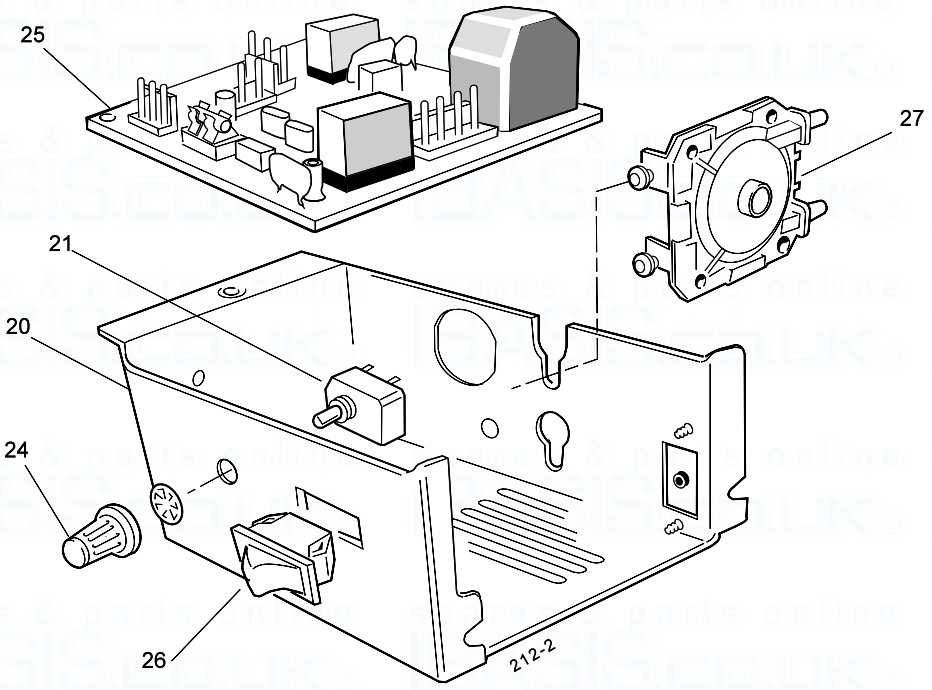

LEGEND

(Numbers up to 67 relate to the B.G. spares list)

20. Control box

21. CH/HW switch

24. CH/HW switch knob

25. Printed circuit board

26. Mains on/off switch

27. Air pressure switch

Before attempting to rectify any electrical fault ALWAYS carry out the preliminary electrical system checks, using a suitable test meter. Detailed instructions on the replacement of faulty parts are contained within the 'Servicing' section of this publication.

Notes.

1. *Ensure that the boiler and system is full of water, free from air locks and that the pump is running.*
2. *Press the overheat thermostat reset button and continue with the fault finding procedure. Replace the thermostat if it operates before the normal working temperature is reached.*
3. *In order to assist fault finding, the control box printed circuit board is fitted with 4 indicator lights:*

Neon I_1	*Air pressure switch made*
Neon I_2	*Fan voltage indication*
Neon I_3	*Mains supply to PCB 25B.*
Neon SGI	*Flashes to indicate spark operation (stops after detection)*

96 DOMESTIC HOT WATER MODE

Start from cold. Turn the CH / HW switch to HW ONLY and the burner ON/OFF switch to ON. Also turn any time clock ON and switch ON the mains electricity supply.

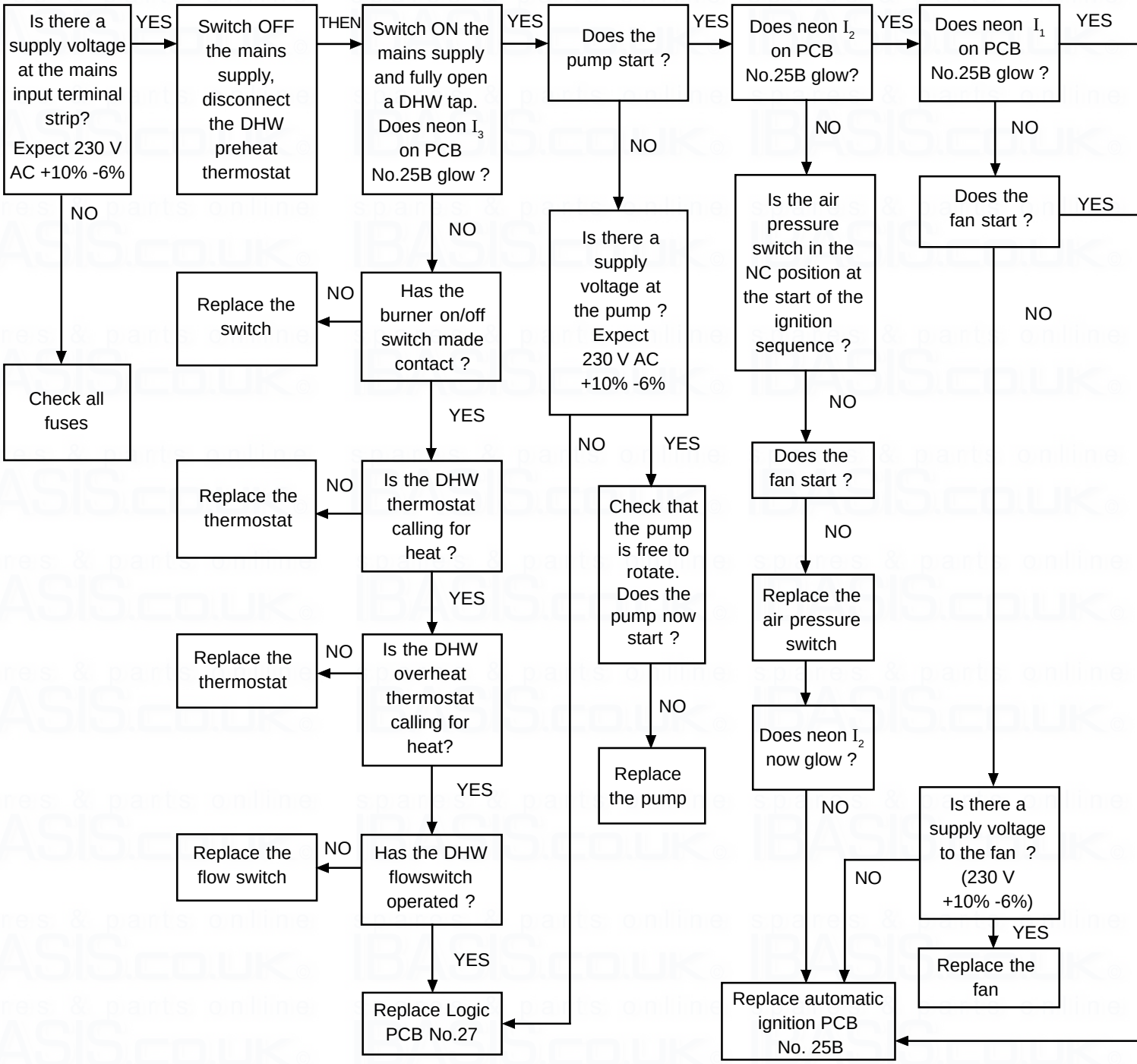

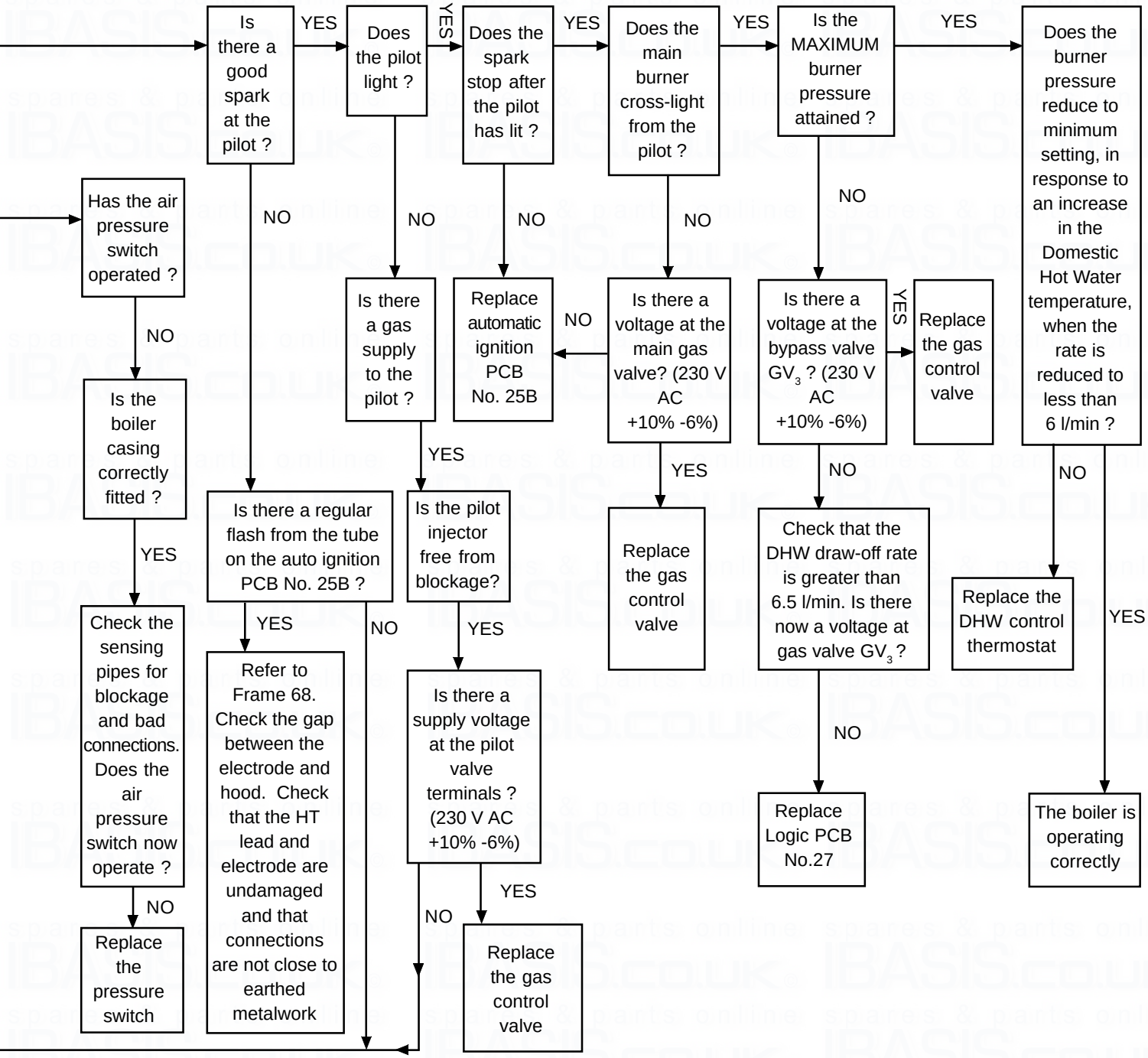
Is there a good spark at the pilot ?
YES
Does the pilot light ?
YES
Does the spark stop after the pilot has lit ?
YES
Does the main burner cross-light from the pilot ?
YES
Is the MAXIMUM burner pressure attained ?
YES
Does the burner pressure reduce to minimum setting, in response to an increase in the Domestic Hot Water temperature, when the rate is reduced to less than 6 l/min ?
NO
Has the air pressure switch operated ?
NO
Is the boiler casing correctly fitted ?
YES
Check the sensing pipes for blockage and bad connections. Does the air pressure switch now operate ?
NO
Replace the pressure switch
NO
Is there a gas supply to the pilot ?
YES
Is the pilot injector free from blockage?
YES
Is there a supply voltage at the pilot valve terminals ? (230 V AC +10% -6%)
YES
Replace the gas control valve
NO
Replace automatic ignition PCB No. 25B
NO
Is there a voltage at the main gas valve? (230 V AC +10% -6%)
YES
Replace the gas control valve
NO
Is there a voltage at the bypass valve GV3 ? (230 V AC +10% -6%)
YES
Replace the gas control valve
NO
Check that the DHW draw-off rate is greater than 6.5 l/min. Is there now a voltage at gas valve GV3 ?
NO
Replace Logic PCB No.27
NO
Replace the DHW control thermostat
YES
The boiler is operating correctly
Is there a regular flash from the tube on the auto ignition PCB No. 25B ?
YES
Refer to Frame 68. Check the gap between the electrode and hood. Check that the HT lead and electrode are undamaged and that connections are not close to earthed metalwork
NO

97 PREHEAT MODE

Start from cold. Turn the CH/HW switch to HW ONLY and any time clock ON. Ensure that all DHW taps are OFF. Turn the burner on/off switch ON. Switch ON the mains supply.

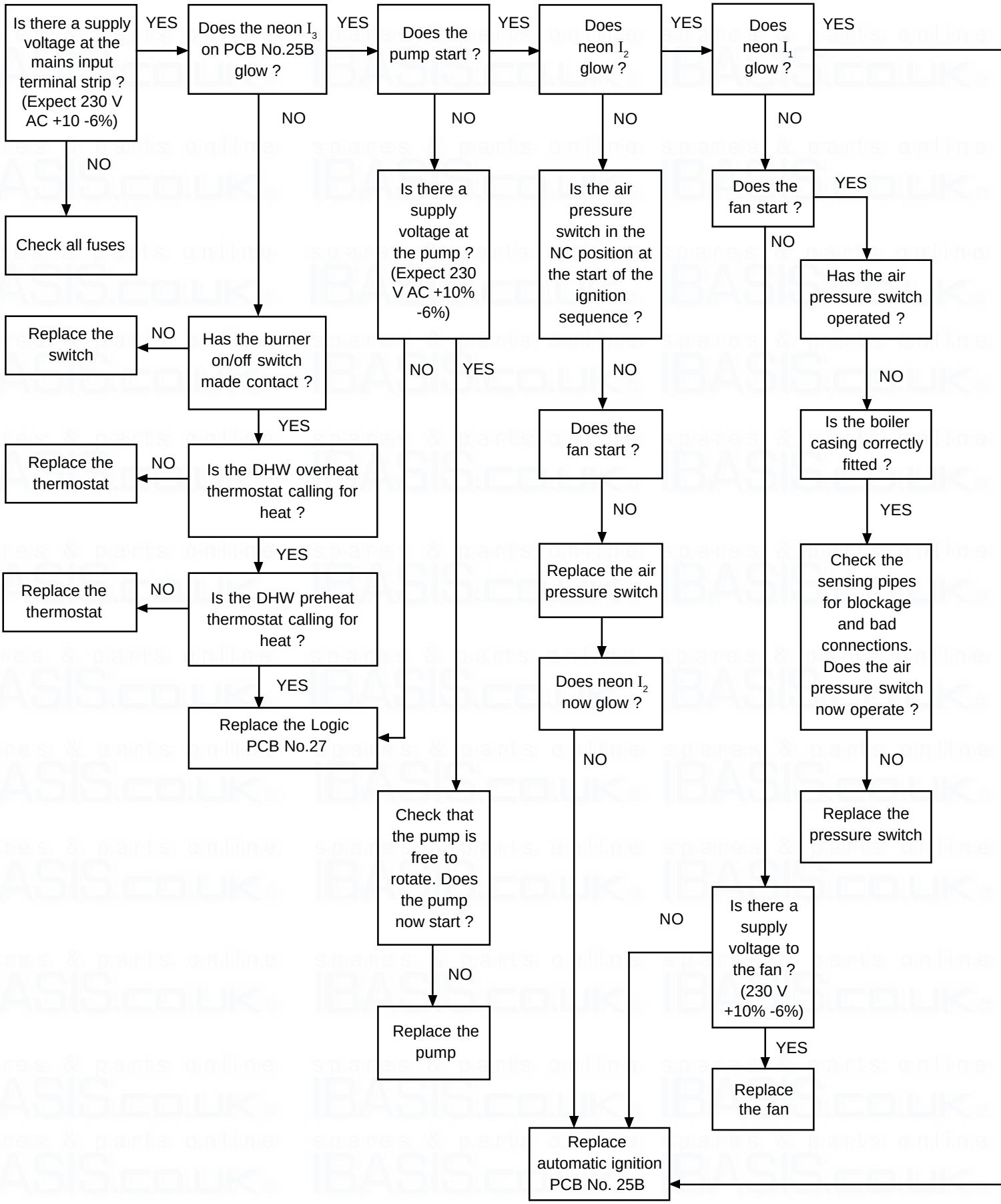

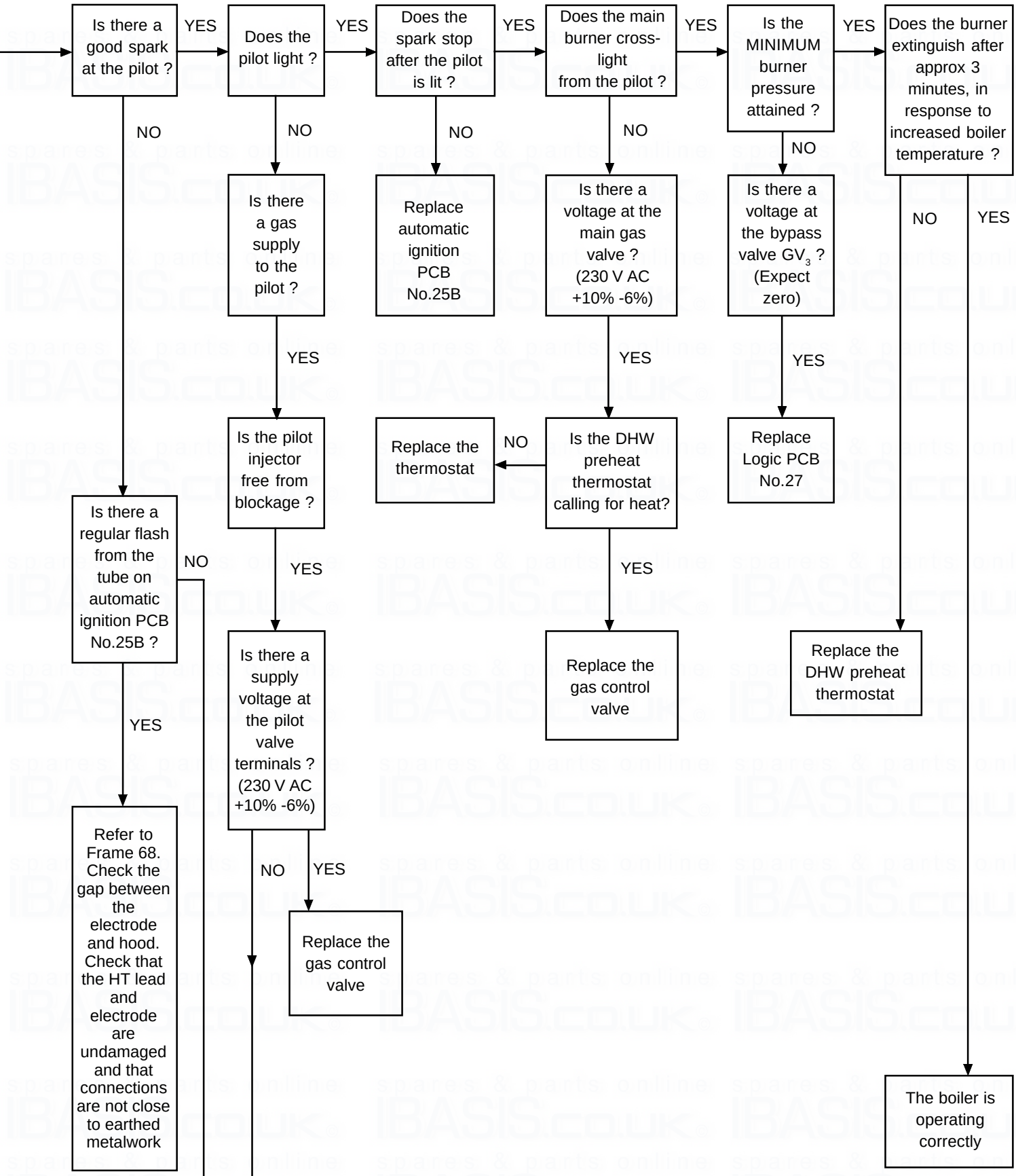
Is there a good spark at the pilot ?
YES
Does the pilot light ?
YES
Does the spark stop after the pilot is lit ?
YES
Does the main burner cross-light from the pilot ?
YES
Is the MINIMUM burner pressure attained ?
YES
Does the burner extinguish after approx 3 minutes, in response to increased boiler temperature ?
NO
YES
The boiler is operating correctly
NO
Is there a gas supply to the pilot ?
NO
Replace automatic ignition PCB No.25B
NO
Is there a voltage at the main gas valve ? (230 V AC +10% -6%)
NO
Is there a voltage at the bypass valve GV3 ? (Expect zero)
NO
Replace the DHW preheat thermostat
YES
Is the pilot injector free from blockage ?
YES
Is the DHW preheat thermostat calling for heat?
NO
Replace the thermostat
YES
Replace Logic PCB No.27
YES
Replace the gas control valve
NO
Is there a regular flash from the tube on automatic ignition PCB No.25B ?
YES
Refer to Frame 68. Check the gap between the electrode and hood. Check that the HT lead and electrode are undamaged and that connections are not close to earthed metalwork
YES
Is there a supply voltage at the pilot valve terminals ? (230 V AC +10% -6%)
NO
YES
Replace the gas control valve

98 CENTRAL HEATING MODE

Start from cold. Turn the CH/HW switch to CH & HW, and any time clock and room thermostat ON. Ensure that all DHW taps remain OFF. Turn the burner ON/OFF switch ON. Switch ON the mains supply.

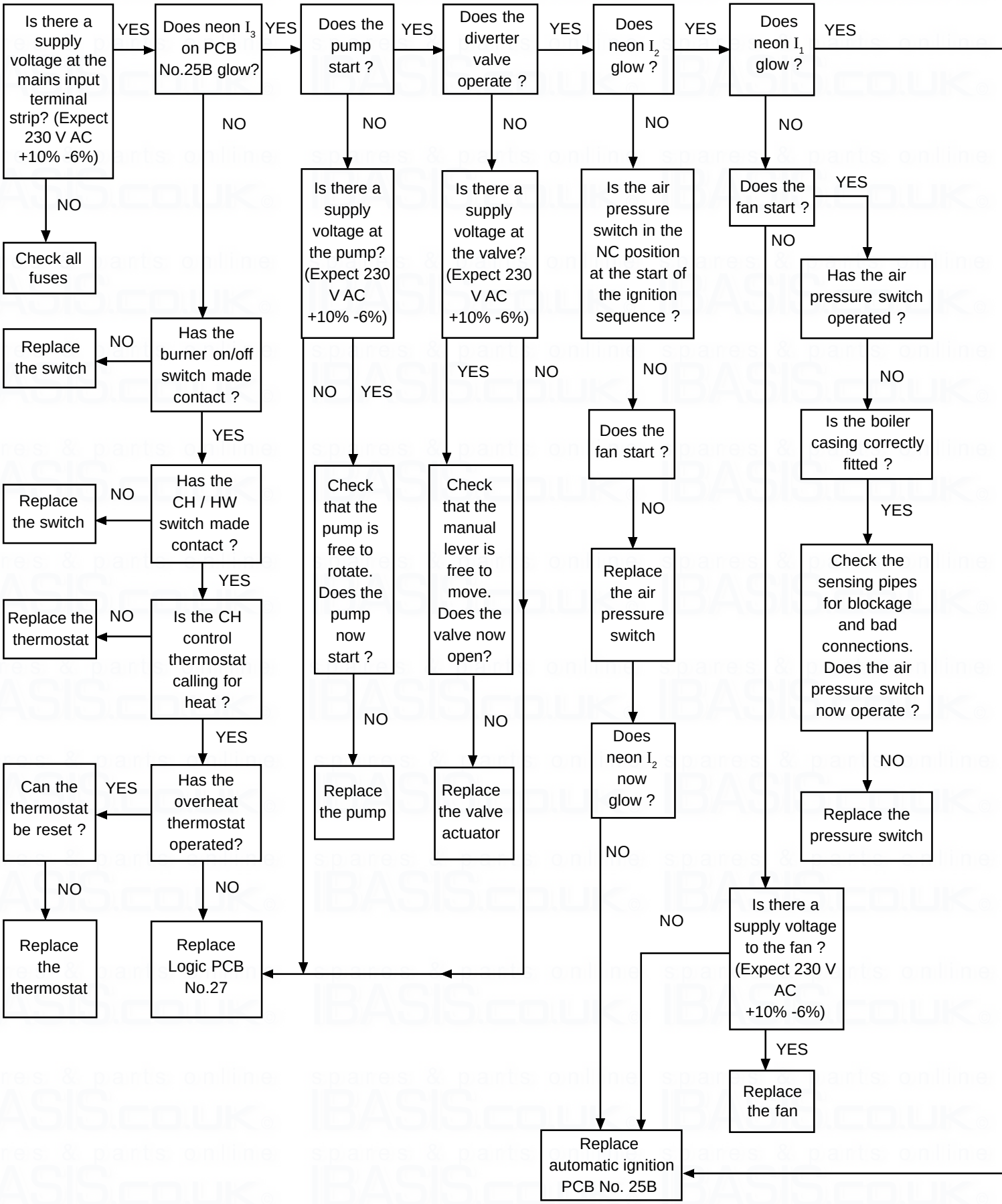

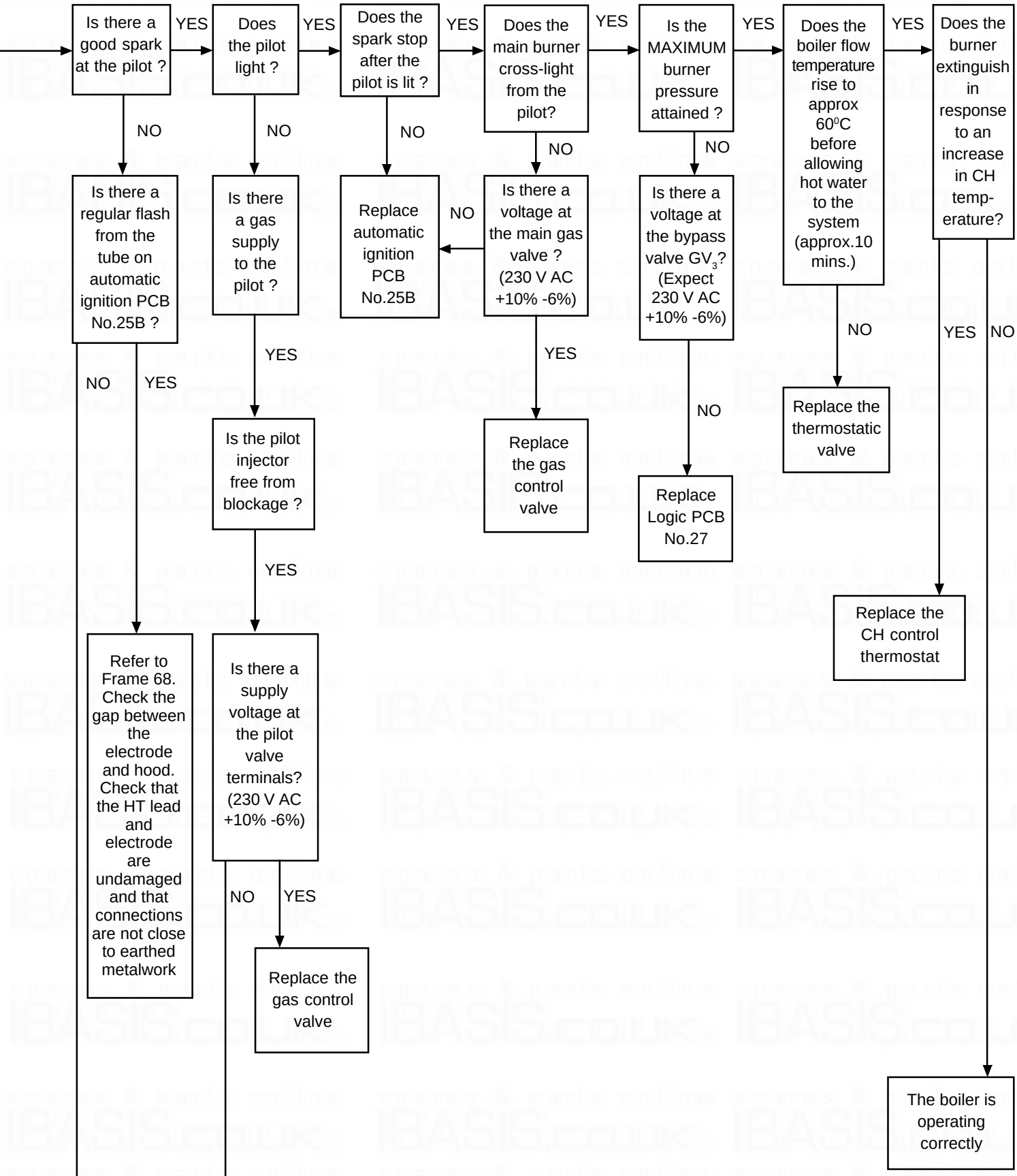
Is there a good spark at the pilot ?
YES
Does the pilot light ?
YES
Does the spark stop after the pilot is lit ?
YES
Does the main burner cross-light from the pilot?
YES
Is the MAXIMUM burner pressure attained ?
YES
Does the boiler flow temperature rise to approx 60°C before allowing hot water to the system (approx.10 mins.)
YES
Does the burner extinguish in response to an increase in CH temp-erature?
NO
Is there a regular flash from the tube on automatic ignition PCB No.25B ?
NO
YES
Refer to Frame 68. Check the gap between the electrode and hood. Check that the HT lead and electrode are undamaged and that connections are not close to earthed metalwork
NO
Is there a gas supply to the pilot ?
YES
Is the pilot injector free from blockage ?
YES
Is there a supply voltage at the pilot valve terminals? (230 V AC +10% -6%)
NO
YES
Replace the gas control valve
NO
Replace automatic ignition PCB No.25B
NO
Is there a voltage at the main gas valve ? (230 V AC +10% -6%)
YES
Replace the gas control valve
NO
Is there a voltage at the bypass valve GV3? (Expect 230 V AC +10% -6%)
NO
Replace Logic PCB No.27
NO
Replace the thermostatic valve
YES
Replace the CH control thermostat
NO
The boiler is operating correctly

SHORT LIST OF PARTS

The following are parts commonly required due to damage or expendability. Their failure or absence is likely to affect safety or performance of this appliance.

The list is extracted from the British Gas List of Parts, which contains all available spare parts.

The full list is held by British Gas, **Caradon Ideal** distributors and merchants.

Classic Combi FF 280
Gas Boilers

When ordering spares please quote:

1. Boiler Model
2. Appliance G.C. Number
3. Description
4. Quantity
5. Product Number

Key No.	GC Part No.	Description	Qty.	Product No.
8	308 365	Sightglass assembly kit	1	079 602
12	379 919	Main burner: AEROMATIC No. AC 19/123 292	1	111 709
13	398 065	Main burner injector: BRAY Cat. 10 - size 2300;	1	004 444
14	397 943	Pilot burner injector: HONEYWELL 4580	1	004 982
14A	308 358	Pilot burner: HONEYWELL Q359 A 1124	1	079 599
16	--	Gas control valve: HONEYWELL VR 4601 PA 2020	1	111 075
17	308 536	Ignition electrode complete with lead and backnut	1	111 881
18	--	Control box assembly	1	150 615
19	374 073	Rotary on/off switch	1	005 823
21	386 149	Automatic ignition printed circuit board - PACTROL PCB No. 25B	1	079 716
22	386 802	Burner on/off switch: ARROW HART Cygnet Series No. 100 0 11 E (A)	1	004 882
23	--	Pressure switch: HONEYWELL YAMATAKE C6065 A 1010	1	137 990
24	308 536	Fan assembly	1	111 947
27	386 830	Automatic air vent: CALEFFI 5030	1	113 116
28	374 088	Pressure gauge	1	113 089
29	392 921	Thermostat - high setting	1	079 634
30	378 074	DHW preheat thermostat: ELMWOOD 2455 R - 192 / 940 (green dot)	1	079 635
31	378 075	DHW control thermostat ELMWOOD 2455 R - 192 / 941 (yellow dot)	1	079 636
32	374 045	Safety valve: CALEFFI 3141	1	113 026
33	374 074	Combi module cover (with fixing screw)	1	079 637
35	374 076	Pump: GRUNDFOS 15 - 50	1	005 595
41	374 081	Diverter valve assy: HONEYWELL 4044 C 1536	1	005 871
43	374 083	CH thermostatic valve	1	005 803
47	374 086	DHW flow switch assy: HONSBERG Fluvatest UM 15 MA	1	005 856
48	378 085	DHW filter: GASCON G - C 901	1	005 810
52	378 076	Logic PCB No.27, PACTROL	1	005 632
53	374 100	CH 8 -litre expansion vessel	1	113 205
54	--	Boiler casing assembly	1	079 947
56	--	Controls casing door	1	079 948
57	308 331	Boiler sealing pack	1	079 605
67	378 087	CH overheat thermostat, RANCO LM7 - P 8508	1	005 900

99 SHORT PARTS LIST

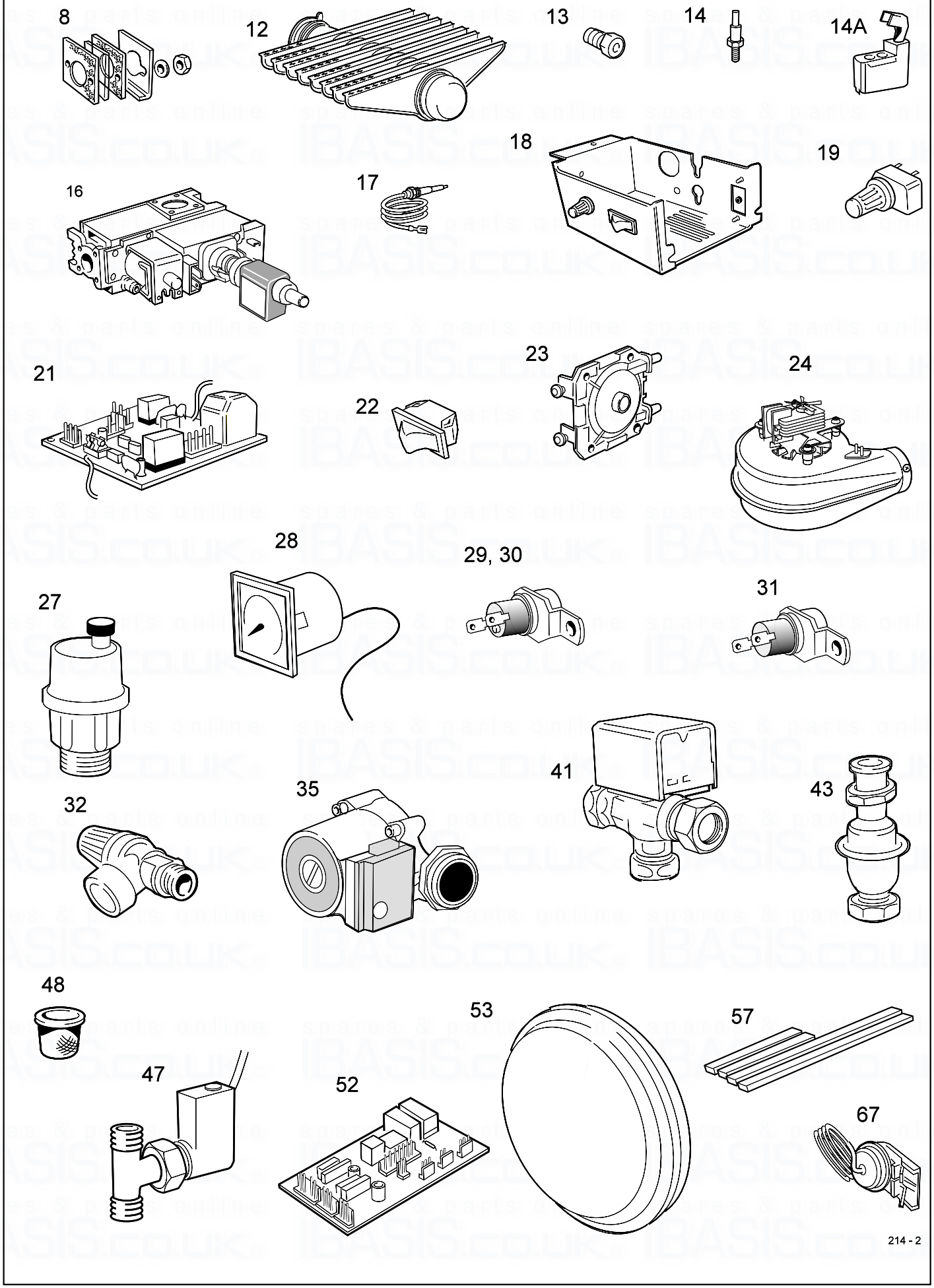

100 BOILER CASING ASSEMBLY

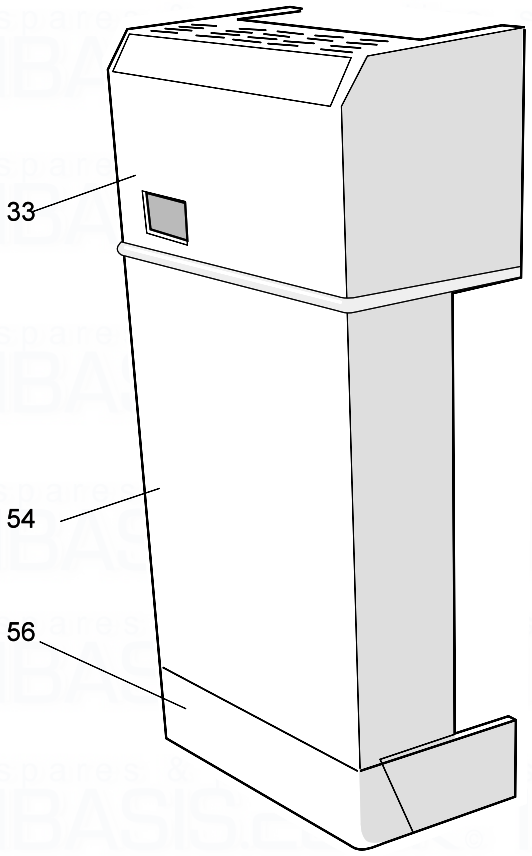

THIS SYMBOL IS YOUR ASSURANCE OF QUALITY

These appliances are designed for use with Natural Gas only. They have been tested and conform with the provisions of BS. 6332 and BS. 5258.

CERTIFIED PRODUCT
Manufactured under a BS EN ISO 9001:1994 Quality System accepted by BSI.

Technical Training

The Caradon Ideal Technical Training Centre offers a series of first class training courses for domestic, commercial and industrial heating installers, engineers and system specifiers. For details of courses please ring:

..... *Alexa Beadle on 01482 498 432*

CARADON IDEAL Ltd. pursues a policy of continuing improvement in the design and performance of its products. The right is therefore reserved to vary specification without notice.

CE NO. FF.87/AQ/41

Customer Care & Technical Support

Please use the following numbers for speedy assistance.

Ideal Parts ..... *Tel: 01482 498 665*

..... *Fax: 01482 498 489*

Customer Care & Technical Support.

Scotland/N. England/Midlands ..... Tel: 01482 498 636

Southern England/S. Wales ..... Tel: 01482 498 660

..... *Fax: 01482 498 666*

Publications/literature..... *Tel: 01482 498 467*

CARADON IDEAL Ltd.,
P.O. Box 103, National Avenue,
Kingston upon Hull, HU5 4JN.
Telephone: 01482 492 251 Fax: 01482 448 858.
Registration No. London 322 137.
Registered Office; National Avenue,
Kingston upon Hull, HU5 4JN.
A subsidiary of Caradon p.l.c

March 1997 112 228 A05

Ideal BOILERS

Printed in England

Classic Combi FF 280

User's Instructions

Wall Mounted, Fanned, Balanced Flue Gas Boiler

Natural Gas Model

Classic	**G.C. Appliance No.**
FF 280	47 415 08

CAUTION

To avoid the possibility of injury during the cleaning of this appliance care should be taken when handling the edges of sheet steel components.

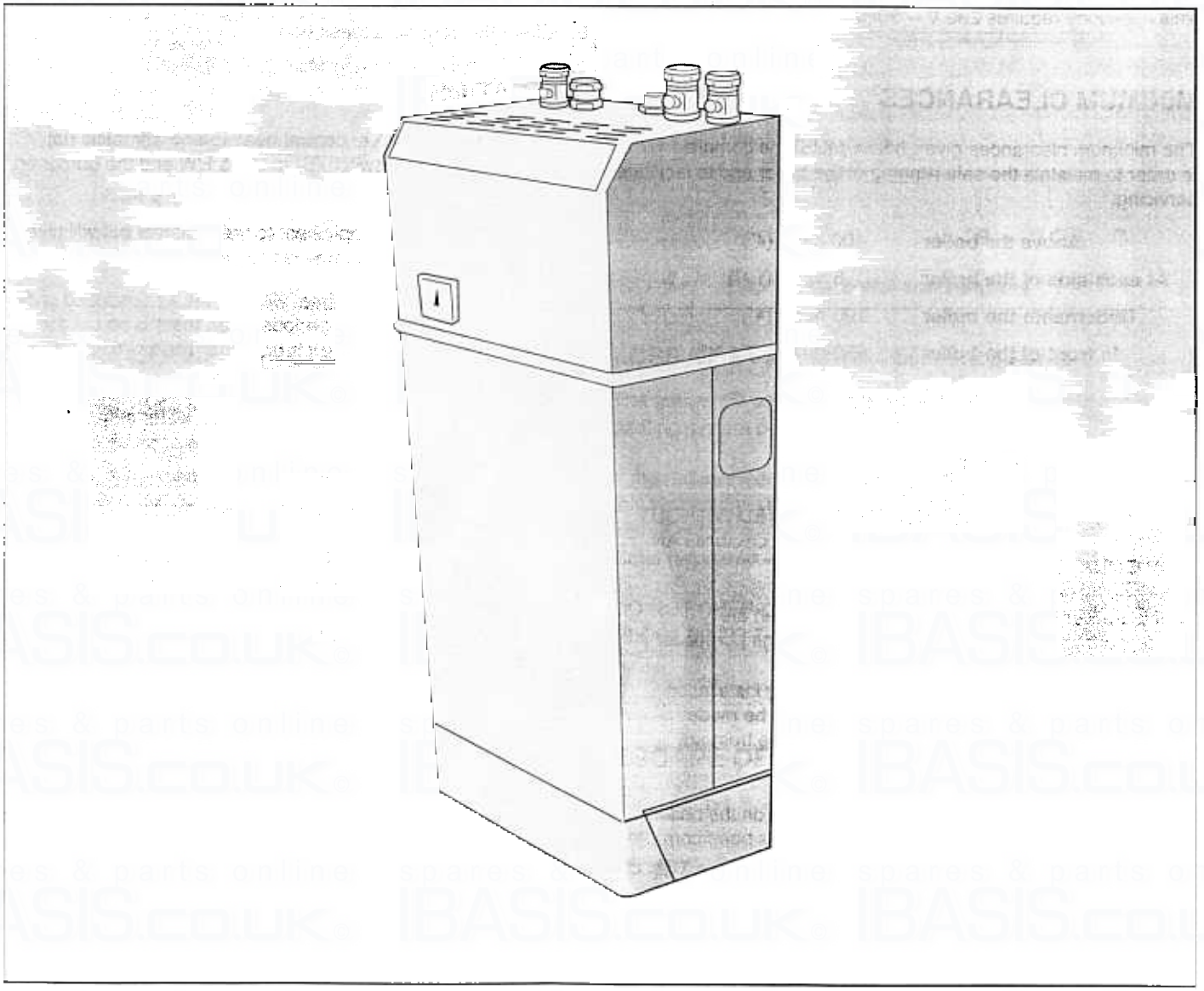

NOTE TO THE INSTALLER: LEAVE THESE INSTRUCTIONS ADJACENT TO THE GAS METER

Ideal BOILERS

GAS SAFETY (INSTALLATION AND USE) REGULATIONS, 1994.

It is law that **all** gas appliances are installed by a CORGI registered installer (identified by ❀) in accordance with the above regulations.

Failure to install appliances correctly could lead to prosecution. It is in your own interest, and that of safety, to ensure the law is complied with.

ELECTRICITY SUPPLY

This appliance must be connected to the supply via a double pole switch fused at 3 Amps, having a 3mm (1/8") contact separation in both poles, serving only the boiler and system controls.

This appliance must be efficiently earthed

This appliance requires 230 V ~ 50Hz.

MINIMUM CLEARANCES

The minimum clearances given below MUST be complied with, in order to maintain the safe running of the boiler and to facilitate servicing.

Above the boiler	100 mm	(4")
At each side of the boiler	5 mm	(1/4")
Underneath the boiler	100 mm	(4")
In front of the boiler	450 mm	(17 3 /4")

IMPORTANT NOTES

a. THIS APPLIANCE MUST NOT BE OPERATED WITHOUT THE CASING CORRECTLY FITTED AND FORMING AN ADEQUATE SEAL.

b. If the boiler is installed in a compartment then the compartment MUST NOT be used for storage purposes.

c. The ventilation provided for the boiler during installation MUST NOT be blocked and a check should be made periodically that the ventilation areas are free from any obstruction.

d. If it is known or suspected that a fault exists on the boiler then it MUST NOT be used until the fault has been corrected by a CORGI registered installer.

It is essential that the instructions in this booklet are strictly followed, for safe and economical operation of the boiler.

The **Classic Combi FF 280** is a combination boiler providing both central heating and instantaneous domestic hot water.

TO LIGHT THE BOILER.
Refer to the illustration on page 3

1. CHECK THAT THE ELECTRICITY SUPPLY TO THE BOILER IS OFF.
2. Open the controls access door by hinging downwards.
3. Ensure that the burner on/off switch (C) is OFF and the CH/HW switch (B) is set to HW ONLY. Also ensure that all hot water taps are turned OFF.
4. Switch ON the electricity supply to the boiler and check that all external controls, e.g. programmer, room thermostat, etc. are ON.
   If a programmer is fitted then refer to the instructions provided.
5. Set the burner on/off switch (C) to ON and the CH/HW switch (B) to the desired position. After about 15 seconds the boiler will light automatically - this can be viewed through the sight glass (A).
6. Close the controls access door.

OPERATION

In **winter conditions**, i.e. central heating and domestic hot water, set the CH/HW switch (B) to CH & HW and the burner on/off switch (C) to ON.

The boiler will fire and supply heat to the radiators but will give priority to domestic hot water when required.

The domestic hot water pre-heat will operate as described under ' summer conditions', during periods when there is no call for central heating, i.e. when the programmer and/or room thermostat is OFF - unless it is also timed.

For **summer conditions**, i.e. domestic hot water only, set the CH/HW switch (B) to HW ONLY and the burner on/off switch (C) to ON.

The boiler will fire for approximately 3 minutes at low rate, to pre-heat the domestic hot water calorifier. Thereafter it will fire periodically for a few seconds in order to maintain the temperature. This will occur 24 hours a day unless a programmer is fitted, allowing the pre-heat to be timed - refer to the separate Programmer Instructions.

Note.
With timed domestic hot water pre-heat, the domestic hot water may take longer to attain maximum temperature at the beginning of the ON periods.

CONTROL OF WATER TEMPERATURE

DOMESTIC HOT WATER

The domestic hot water draw-off temperature is limited by the low rate gas control to approximately 70°C at the minimum water draw-off rate of about 3.5 litre/min. (0.8 gpm).

Additionally, the draw-off temperature is controlled by adjusting the flow rate at the tap - the lower the draw-off rate, the higher the temperature, and vice versa.

At higher domestic hot water draw-off rates (greater than 6.0 litre/min. - 1.3 gpm) the boiler will fire at full gas rate.

CENTRAL HEATING

The boiler control, firing at full gas rate, automatically maintains the central heating radiator temperature at approximately 80°C.

BOILER CONTROLS

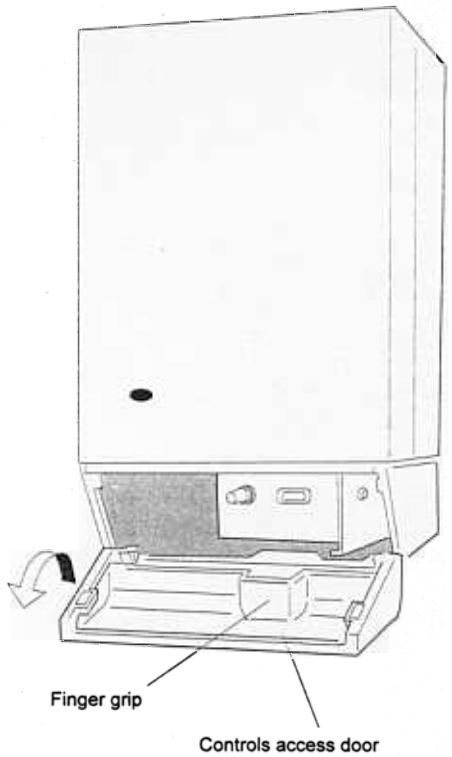

LEGEND

A Sightglass

B CH. /HW. Switch

C Burner On / Off switch

D Overheat thermostat reset button

E Central heating pressure gauge

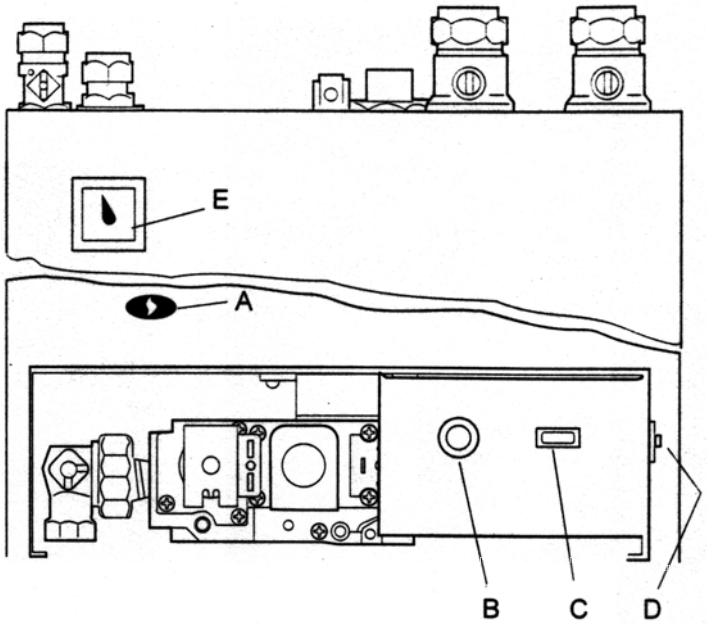

View inside boiler controls area

TO SHUT DOWN THE BOILER

1. **For short periods**

   Set the burner on/off switch (C) to OFF.
   When heating is again required, reset the switch to ON.

2. **For longer periods**

   Set the burner on/off switch (C) to OFF.
   Switch the electricity supply to OFF.

WARNING.

If no frost protection is provided and frost is likely during a short absence from home, leave the heating controls (if fitted) at a reduced temperature setting.

For longer periods, the entire system should be drained - including the domestic water supply. If the system includes a frost thermostat then, during cold weather, the boiler should be turned OFF at the time switch(es) ONLY. The mains supply should be left switched ON, with the boiler thermostat left in the normal running position.

BOILER OVERHEAT THERMOSTAT

The boiler is fitted with a safety 'cutout' thermostat. This will shut down the boiler in the event of overheating. Should this occur allow the boiler to cool, press the overheat reset button (D) then relight as detailed in steps 1-5 in 'To light the boiler'.

If the cutout condition still persists turn off the boiler and consult a Corgi registered installer.

LOSS OF SYSTEM WATER PRESSURE

The gauge (E) on the Combi module indicates the central heating system pressure.

If the red arrow on the pressure gauge (E) is set above zero and the system pressure is seen to fall below this value over a period of time then a water leak is indicated. In this event a Corgi registered installer should be consulted.

DO NOT OPERATE THE BOILER IF THE PRESSURE HAS REDUCED TO ZERO FROM THE ORIGINAL SETTING.

ESCAPE OF GAS

Should a gas leak be suspected, contact your local gas supplier without delay.

Do NOT search for gas leaks with a naked flame.

CLEANING

For normal cleaning simply dust with a dry cloth.
To remove stubborn marks and stains, wipe with a damp cloth and finish off with a dry cloth.

Do NOT use abrasive cleaning materials.

MAINTENANCE

The appliance should be serviced at least once a year by a Corgi registered installer.

spares & parts online IBASIS.CO.UK®

THIS SYMBOL IS YOUR ASSURANCE OF QUALITY

These appliances are designed for use with Natural Gas only. They have been tested and conform with the provisions of BS. 6332 and BS. 5258.

CERTIFIED PRODUCT
Manufactured under a BS EN ISO 9001: 1994
Quality System accepted by BSI

Customer Care & Technical Support

Please use the following numbers for speedy assistance.

Ideal Parts.... ..... *Tel: 01482 498 665*

..... *Fax: 01482 498 489*

Customer Care & Technical Support.

Scotland/N. England/Midlands ..... *Tel: 01482 498 636*

Southern England/S. Wales ..... *Tel: 01482 498 660*

..... *Fax: 01482 498 666*

Publications/literature..... *Tel: 01482 498 467*

CARADON IDEAL Ltd. pursues a policy of continuing improvement in the design and performance of its products. The right is therefore reserved to vary specification without notice.

CARADON IDEAL Ltd.,
P.O. Box 103, National Avenue,
Kingston upon Hull,
North Humberside. HU5 4JN.
Telephone: 01482 492 251 Fax: 01482 448 858.
Registration No. London 322 137.
Registered Office; National Avenue, Kingston upon Hull,
North Humberside, HU5 4JN.
A subsidiary of Caradon p.l.c

September 1995 112 226 A02

BOILERS Ideal

Printed in England