installation and servicing

Classic Slimline

Your Ideal installation and servicing guide

FF 330 - 360

When replacing any part on this appliance, use only spare parts that you can be assured conform to the safety and performance specification that we require. Do not use reconditioned or copy parts that have not been clearly authorised by Ideal Boilers.

Ideal BOILERS

ENGINEERED FOR PEACE OF MIND

GENERAL

Table 1 - General Data

Boiler Size			FF 330	FF 340	FF 350	FF 360
Gas supply connection		(in. BSP)	Rc 1/2 (1/2) 1/2" (BSP Female)			
Flow connection			22mm copper			
Return connection			22mm copper			
Maximum static water head		m (ft.)	30.5 (100)			
Minimum static water head		m (ft.)	0.45 (1.5)			
Electrical supply			230 V 50 Hz Boiler power consumption; 100W			
Fuse rating			External; 3A Internal; F1A to BS.4265			
Water content		litre (gal.)	2.7 (0.6)		3.65 (0.8)	
Dry Weight		kg (lb)	40.9 (90.3)		46.6 (102.8)	
Maximum installation weight		kg (lb)	31.4 (69.3)		37.4 (82.5)	
Boiler size	Height	mm (in.)	700 (27.5)			
	Width	mm (in.)	380 (15.0)			
	Depth	mm (in.)	280 (11.0)			
Flue duct diameter		mm (in.)	100 (4.0)			
Flue duct length (max)		m (ft)	1.0 (3.3)			

Table 2 - Performance Data

Boiler Size			FF 330	FF 340	FF 350	FF 360
Boiler input		kW	10.8	14.5	17.85	21.9
		Btu/h x 1000	36.8	49.3	61.0	74.7
	Gas consumption	l/s	0.275	0.375	0.458	0.567
		ft^3/h	35.4	47.5	58.7	72.0
Boiler output		kW	8.8	11.7	14.7	17.6
		Btu/h x 1000	30	40	50	60
Burner Setting pressure (HOT)		mbar (in.w.g.)	12.6 (5.0)	11.0 (4.4)	12.7 (5.0)	14.0 (5.6)
Seasonal Efficiency (SEDBUK) *		Band D	[80.4]%	[79.2]%	[80.6]%	[79.9]%

* The value is used in the UK Government's Standard Assessment Procedure (SAP) for energy rating of dwellings. The test data from which it has been calculated have been certified by a notified body.

Note. *Gas consumption is calculated using a calorific value of 38.7 MJ/m³ (1038 Btu/ft³) gross or 34.9 MJ/m³ (935 Btu/ft³) nett*

To obtain the gas consumption at a different calorific value:-

a. FOR L/S *- divide the gross heat input (kW) by the gross C.V. of the gas (MJ/m³)*

b. FOR FT³/H *- divide the gross heat input (Btu/h) by the gross C.V. of the gas (Btu/ft³)*

CAUTION. To avoid the possibility of injury during the installation, servicing or cleaning of this appliance, care should be taken when handling edges of sheet steel components

Classic Slimline FF

Natural Gas only

Data Badge: on top of the controls support
B.G. Certified - P.I. No. 87AP107
Destination Countries: GB & IE Appliance type: C_{12}

Slimline models	G.C. Appliance No.
Classic FF 330	41 392 02
Classic FF 340	41 392 03
Classic FF 350	41 392 04
Classic FF 360	41 392 05

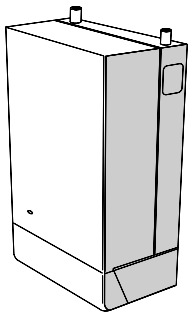

Key to symbols

IE = Ireland

GB = United Kingdom

PMS = Maximum operating pressure of water

C_{12} = A room sealed appliance designed for connection via ducts to a horizontal terminal, which admits fresh air to the burner and discharges the products of combustion to the outside through orifices which, in this case, are concentric. The fan is down stream of the combustion chamber.

I_{2H} = An appliance designed for use on 2nd Family gas, Group H only.

CONTENTS

Air Supply 6
Boiler Clearances 5
Boiler Exploded View 11
Burner Exploded View 38
Control Box Exploded View 38
Electrical Connections 22
Electrical Regulations 7
Extension Ducts - Fitting 20
External Control 22
Fault Finding 35
Flue Installation 6
  Rear installation 14
  Side installation 17
Gas Safety 4
Gas Supply 6
Initial Lighting 25
Installation 11
Mandatory Requirements 4
Pump 8
Servicing 27
Short List of Parts 36
Spares Replacement 29
System Diagrams 23
Terminal Guards 6
Water and Systems 7
Water Treatment 7

For GB, to comply with Building Regulations Part L1 (Part J in Scotland) the boiler should be fitted in accordance with the manufacturer's instructions. Self-certification that the boiler has been installed to comply with Building Regulations can be demonstrated by completing and signing the Benchmark log book.

BENCHMARK LOG BOOK DETAILS

Boiler	**Page**
Make and model	3
Appliance serial no. on data badge	11
SEDBUK No. %	2
Controls	
Time and temperature control to heating	23/24
Time and temperature control to hot water	23/24
Heating zone valves	23/24
TRV's	7
Auto bypass	7
Boiler interlock	7
For all boilers	
Flushing to BS.7593	7
Inhibitor	7
Central heating mode	
Heat input	to be calculated

	Page
Burner operating pressure	measure and record
Central heating flow temp.	measure and record
Central heating return temp.	measure and record
For combination boilers only	
Scale reducer	n/a
Hot water mode	
Heat input	n/a
Max. operating burner pressure	n/a
Max. operating water pressure	n/a
Cold water inlet temp	n/a
Hot water outlet temp.	n/a
Water flow rate at max. setting	n/a
For condensing boilers only	
Condensate drain	n/a

For all boilers: *complete, sign & hand over to customer*

For assistance see Technical Helpline on the back page

INTRODUCTION

The Classic Slimline FF330-360 is a range of automatically fully controlled, wall mounted, balanced flue, fanned gas boilers.

The heat exchanger is cast iron. The boiler casing is of white enamelled mild steel.

The boiler casing has a removable controls pod containing a drop-down door. The boiler thermostat is located behind the drop- down door.

Note. *These boilers cannot be used on systems which include gravity circulation.* If gravity circulation is required the **Classic RS** range of boilers is suitable.

See Frame 1 for details of the correct boiler tappings to use.

The boilers are supplied with a standard flue kit suitable for rear or side outlet applications from 114 mm (4 1/2") to 600 mm (23 1/2").

The boilers are suitable for connection to the following open vented or sealed systems:

- Fully pumped CH and indirect DHW
- Pumped heating only.
- Pumped indirect DHW only.

OPTIONAL EXTRA KITS

Extension duct - up to 1m (39").

CURRENT GAS SAFETY (INSTALLATION AND USE) REGULATIONS OR RULES IN FORCE.

The appliance is suitable only for installation in GB and IE and should be installed in accordance with the rules in force.

In GB, the installation must be carried out by a CORGI Registered Installer. It must be carried out in accordance with the relevant requirements of the:

- Gas Safety (Installation and Use) Regulations
- The appropriate Building Regulations either The Building Regulations, The Building Regulations (Scotland), Building Regulations (northern Ireland).
- The Water Fittings Regulations or Water byelaws in Scotland.
- The Current I.E.E. Wiring Regulations.

Where no specific instructions are given, reference should be made to the relevant British Standard Code of Practice.

In IE, the installation must be carried out by a Competent Person and installed in accordance with the current edition of I.S.813 "Domestic Gas Installations", the current Building Regulations and reference should be made to the current ETCI rules for electrical installation.

Detailed recommendations are contained in the following British Standard Codes of Practice:

BS.6891 Low pressure installation pipes.

BS.6798 Installation of gas fired hot water boilers of rated input not exceeding 60 kW.

BS.5449 Forced circulation hot water systems.

BS.5546 Installation of gas hot water supplies for domestic purposes (2nd Family Gases).

BS.7593 Treatment of water in domestic hot water central heating systems.

BS.5440.1 Flues for gas appliances of rated input not exceeding 70 kW.

BS.5440.2 Ventilation for gas appliances of rated input not exceeding 70 kW.

Health & Safety Document No. 635

The Electricity at Work Regulations, 1989.

Manufacturer's notes must NOT be taken in any way as overriding statutory obligations.

IMPORTANT. These appliances are certificated by the BG Technology Certification Services for safety and performance. It is, therefore, important that no external control devices, e.g. flue dampers, economisers etc., are directly connected to these appliances -unless covered by these Installation and Servicing instructions or otherwise recommended by **Caradon Ideal Limited** in writing. If in doubt please enquire.

Any direct reconnection of a control device not approved by **Caradon Ideal Limited** could invalidate the certification and the normal appliance warranty. It could also infringe the Gas Safety Regulations and the above regulations.

SAFE HANDLING OF SUBSTANCES

Care should be taken when handling the boiler insulation panels, which can cause irritation to the skin. No asbestos, mercury or CFCs are included in any part of the boiler.

LOCATION OF BOILER

The boiler must be installed on a flat and vertical wall, capable of adequately supporting the weight of the boiler and any ancillary equipment.

The boiler may be fitted on a combustible wall and insulation between the wall and the boiler is not necessary - unless required by the local authority. **The boiler must not be fitted outside.**

Timber Framed Buildings

If the boiler is to be fitted in a timber framed building it should be fitted in accordance with the Institute of Gas Engineering document IGE/UP/7:1998.

Bathrooms

The boiler may be installed in any room or internal space, although particular attention is drawn to the requirements of the current I.E.E. (BS.7671) Wiring Regulations and, in Scotland, the electrical provisions of the building regulations applicable in Scotland with respect to the installation of the boiler in a room or internal space containing a bath or shower. For Ireland reference should be made to the current ETCI rules for electrical installations and I.S. 813: 2002.

.....continued on page 6.

NOTE TO THE INSTALLER: LEAVE THESE INSTRUCTIONS ADJACENT TO THE GAS METER. ALSO COMPLETE THE BENCHMARK LOG BOOK AND GIVE THIS TO THE CUSTOMER.

benchmark™

1 BOILER WATER CONNECTIONS

This appliance in NOT suitable for use in a direct hot water system or for gravity circulation.

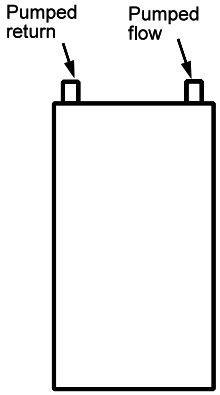

2 BOILER CLEARANCES

The following minimum clearances must be maintained for operation and servicing.

Additional space will be required for installation, depending upon site conditions.

Side and Rear Flue

a. Provided that the flue hole is cut accurately, e.g. with a core drill, the flue can be installed from inside the building.

Installation from inside ONLY

b. If a core boring tool is to be used inside the building; the space in which the boiler is to be installed must be at least wide enough to accommodate the tool.

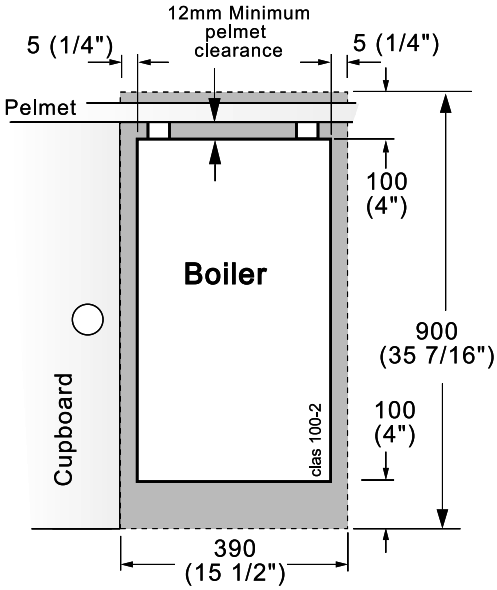

Front clearance: 533mm (21") from the front of the boiler casing.

Minimum front clearance when built behind a concealing panel is 5mm (1/4") provided that the top and bottom of the casing are *NOT* enclosed.

Pelmet restrictions.

If the ability to fit or remove the casing during installation and subsequent servicing is impaired by pelmets etc. this operation can be made easier by first removing the controls pod casing in line with the following instructions:

a. Release the controls pod casing fixing screws (a) 3 full turns only. Remove the pod by pulling it forward to disengage from the keyhole slots.

b. Undo the 2 screws (b) retaining casing to the back panel.

c. The casing can now be removed in the direction of the arrow, first lifting the casing slightly to disengage the casing top return from the back panel. (For this purpose a minimum clearance of 12mm is required between the top of the boiler and pelmet or other similar obstruction.

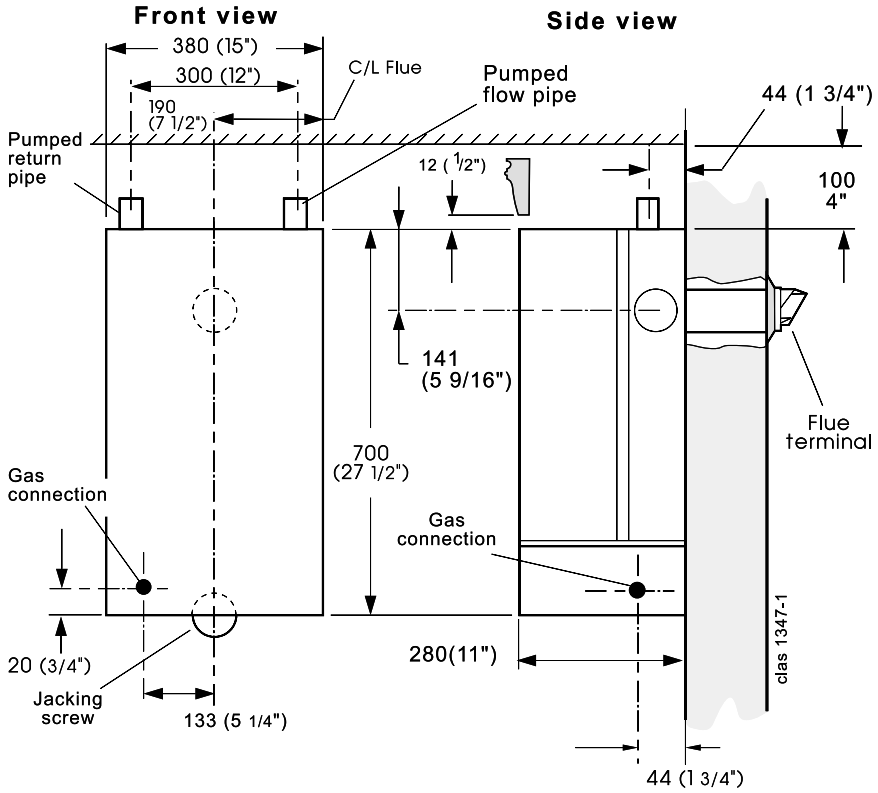

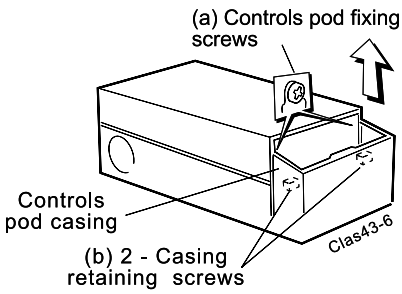

Where a room-sealed appliance is installed in a room containing a bath or shower then the appliance and any electrical switch or appliance control utilising mains electricity should be so situated that it cannot be touched by a person using the bath or shower.

Where installation will be in an unusual location, special procedures may be necessary and BS.6798 gives detailed guidance on this aspect.

Compartment Installations

A compartment used to enclose the boiler MUST be designed and constructed specially for this purpose.
An existing cupboard or compartment may be used, provided it is modified for the purpose.

In both cases details of essential features of cupboards/ compartment design, including airing cupboard installation, are to conform to the following :

- BS. 6798.
- The position selected for installation MUST allow adequate space for servicing in front of the boiler and for air circulation around the boiler. Refer to 'Air Supply'.
- For the minimum clearances required for safety and subsequent service refer to Frame 2. In addition, sufficient space may be required to allow lifting access to the wall mounting plate.

GAS SUPPLY

The local gas supplier should be consulted, at the installation planning stage, in order to establish the availability of an adequate supply of gas. An existing service pipe must NOT be used without prior consultation with the local gas supplier.

The boiler is to be installed only on gas supply with a governed meter.

A gas meter can only be connected by the local gas supplier or by a local regional contractor.

An existing meter should be checked, preferably by the gas supplier, to ensure that the meter is adequate to deal with the rate of gas supply required. A MINIMUM pressure of 20 mbar MUST be available at the boiler inlet with the boiler operating.

Installation pipes MUST be fitted in accordance with BS. 6891. In IE refer to I.S. 813:2002. Pipework from the meter to the boiler MUST be of an adequate size.

The complete installation MUST be tested for gas soundness and purged as described in the above code.

FLUE INSTALLATION

Pluming may occur at the terminal so terminal positions which would cause a nuisance should be avoided.

The flue must be installed in accordance with the recommendations of BS.5440-1:2000. In IE refer to I.S. 813:2002.

The following notes are intended for general guidance:-

1. The boiler MUST be installed so that the terminal is exposed to external air.
2. It is important that the position of the terminal allows the free passage of air across it at all times.
3. Minimum acceptable spacing from the terminal to obstructions and ventilation openings are specified in Table 3.
4. Where the lowest part of the terminal is fitted less than 2m (6'6") above a balcony, above ground or above a flat roof to which people have access then the terminal MUST be protected by a purpose designed guard.

Table 3 - Balanced flue terminal position Approved Manufacturer's Clearances

Terminal Position	Minimum Spacing
1a. Directly BELOW an opening, air brick, opening window, etc.	300 mm (12")
1b. Directly ABOVE an opening, air brick, opening window, etc.	300 mm (12")
1c. HORIZONTALLY to an opening, air brick, opening window, etc.	300 mm (12")
2. Below guttering, drain pipes or soil pipes	25 mm (1")
3. Below eaves	25 mm (1")
4. Below balconies or a car port roof	25 mm (1")
5. From vertical drain pipes or soil pipes	25 mm (1")
6. From an internal or external corner or to a boundary alongside the terminal	25 mm (1")
7. Above adjacent ground, roof or balcony level	300 mm (12")
8. From a surface or a boundary facing the terminal	600 mm (24")
9. From a terminal facing a terminal	1200 mm (48")
10. From an opening in a car port (e.g. door or window) into dwelling	1200 mm (48")
11. Vertically from a terminal on the same wall	1500 mm (60")
12. Horizontally from a terminal on the wall	300 mm (12")

Terminals guards are available from boiler suppliers - ask for TFC Flue Guard, Model K1. In case of difficulty seek advice from:

Grasslin (UK) Ltd., Tower House, Vale Rise, Tonbridge, Kent TN9 1TB.
Tel: +44 (0) 1732 359 888. Fax: +44 (0) 1732 354 445
www.tfc-group.co.uk

Ensure that the guard is fitted centrally.

5. The flue assembly shall be so placed or shielded as to prevent ignition or damage to any part of any building.
6. The air inlet/products outlet duct and the terminal of the boiler MUST NOT be closer than 25mm (1") to combustible material. Detailed recommendations on the protection of combustible material are given in BS.5440-1:2000. In IE refer to I.S. 813:2002.

IMPORTANT. It is absolutely ESSENTIAL to ensure, in practice, that products of combustion discharging from the terminal cannot re-enter the building or any other adjacent building through ventilators, windows, doors, other sources of natural air infiltration, or forced ventilation/air conditioning.

If this should occur, the appliance MUST be turned OFF, labelled 'unsafe' and corrective action taken.

TERMINAL

The terminal assembly can be adapted to accommodate various wall thicknesses. Refer to Frame 10.

AIR SUPPLY

Detailed recommendations for air supply are given in BS.5440:2. In IE refer to I.S. 813:2002.

The following notes are for general guidance:

1. It is NOT necessary to have a purpose provided air vent in the room or internal space in which the boiler is installed.
2. If the boiler is to be installed in a cupboard or compartment, permanent air vents are required (for cooling purposes) in the cupboard/compartment, at both high and low levels. The air vents must either communicate with room/internal space, or be direct to outside air. The minimum effective areas of the permanent air vents, required in the cupboard/compartment, are specified in Table 4 and are related to maximum rated heat input.

Table 4 - High and low vent areas

Boiler	Air from room/internal space, cm (in^2)	Air direct from outside, cm (in^2)
FF 330	102 (16)	51 (8)
FF 340	135 (21)	68 (11)
FF 350	170 (26)	83 (13)
FF 360	198 (31)	102 (16)

3. Both air vents MUST communicate with the same room or internal space or MUST be on the same wall to outside air.
4. In siting the air vents care must be taken to avoid the freezing of pipework.

WATER CIRCULATION SYSTEM

The boiler must NOT be used for direct hot water supply. For the types of system and correct piping procedure refer to 'Introduction' and Frame 1.

The central heating system should be in accordance with BS.6798 and, in addition, for Smallbore and Microbore systems, BS. 5449.

The domestic hot water system, if applicable, should be in accordance with the relevant recommendations of BS. 5546. Copper tubing to BS. 2871:1 is recommended for water carrying pipework.

The hot water storage cylinder MUST be of the indirect type and should preferably be manufactured of copper.

Single feed, indirect cylinders are not recommended and MUST NOT be used on sealed systems.

The appliances are NOT suitable for gravity central heating, nor are they suitable for the provision of gravity domestic hot water.

The hot water cylinder and ancillary pipework, not forming part of the useful heating surface, should be lagged to prevent heat loss and any possible freezing - particularly where pipes run through roof spaces and ventilated under floor spaces.

Boilers not fitted to a sealed system must be vented.

IMPORTANT

A minimum length of 1m of copper pipe MUST be fitted to both flow and return connections from the boiler before connection to any plastic piping. **This applies to ALL types of installation.**

Draining taps MUST be located in accessible positions, which permit the draining of the whole system - including the boiler and hot water storage vessel. They should be at least 1/2" BSP nominal size and be in accordance with BS. 2879.

The boiler is fitted with a special drain plug, which is provided, to drain the BOILER ONLY, in the event of the system drain plug being unable to do so. The hydraulic resistance of the boilers, at MAXIMUM OUTPUT with an 11°C (20°F) temperature differential, are shown in Table 5.

Maximum boiler operating temperature should be 82°C (180°F).

Table 5 - Water flow rate and pressure loss

Boiler Size	FF	330	340	350	360
Boiler Output	kW	8.8	11.7	14.6	17.6
	Btu/h x 1000	30	40	50	60
Water Flow Rate	l/min	11.4	15.2	19.0	22.8
	gal/h	150	200	250	300
Pressure Loss	mbar	22.0	20.4	31.5	41.7
	in wg	8.9	8.3	12.6	16.7

WATER TREATMENT

These boilers incorporate a cast iron heat exchanger.

IMPORTANT. The application of any other treatment to this product may render the guarantee of **Caradon Ideal Limited** INVALID.

Caradon Ideal Limited recommend Water Treatment in accordance with the *Benchmark* Guidance Notes on Water Treatment in Central Heating Systems.

Caradon Ideal Limited recommend the use of Fernox, GE Betz Sentinel or Salamander water treatment products, which must be used on accordance with the manufacturers instructions.

For further information contact:

Fernox Manufacturing Co. Ltd, Cookson Electronics, Forsyth Road, Sheerwater, Woking, Surrey. GU21 5RZ. Tel. +44 (0) 1799 521133

or

G E Betz Ltd, Sentinel Division, Foundry Lane, Widnes, Cheshire, WA8 8UD. Tel. +44 (0) 151 424 5351

or

Salamander Engineering Ltd, Unit 24, Reddicap Trading Estate, Sutton Coldfield, West Midlands B75 7BU. Tel. +44 (0) 121 378 0952

Notes.

1. *It is most important that the correct concentration of the water treatment products is maintained in accordance with the manufacturers' instructions.*
2. *If the boiler is installed in an existing system any unsuitable additives MUST be removed by thorough cleansing. BS7593:1992 details the steps necessary to clean a domestic heating system.*
3. *In hard water areas, treatment to prevent limescale may be necessary - however the use of artificially softened water is NOT permitted.*
4. *Under no circumstances should the boiler be fired before the system has been thoroughly flushed.*

BOILER CONTROL INTERLOCKS

Caradon Ideal Limited recommend that heating systems utilising full thermostatic radiator valve control of temperature in individual rooms should also be fitted with a room thermostat controlling the temperature in a space served by radiators not fitted with such a valve as stated in BS. 5449.

Central heating systems controls should be installed to ensure the boiler is switched off when there is no demand for heating or hot water.

When thermostatic radiator valves are used, the space heating temperature control over a living / dining area or hallway having a heating requirement of at least 10% of the boiler heat output should be achieved using a room thermostat, whilst other rooms are individually controlled by thermostatic radiator valves. However, if the system employs thermostatic radiator valves on all radiators, or two port valves without end switches, then a bypass circuit must be fitted with an automatic bypass valve to ensure a flow of water should all valves be in the closed position.

ELECTRICAL SUPPLY

This appliance must be efficiently earthed.

Wiring external to the appliance MUST be in accordance with the current I.E.E. (BS.7671) Wiring Regulations and any local regulations which apply. For Ireland reference should be made to the current ETCI rules for electrical installations.

The point of connection to the mains should be readily accessible and adjacent to the boiler, except that for bathroom installations; the point of connection to the mains MUST be situated outside of the bathroom.

Note.

Where a room sealed appliance is installed in a room containing a bath or shower then the appliance and any electrical switch or appliance control utilising mains electricity should be so situated that it cannot be touched by a person using the bath or shower. See Frame 38 for details.

3 OPEN VENT SYSTEM REQUIREMENTS - FULLY PUMPED

The system should be vented directly off the boiler flow pipe, as close to the boiler as possible. The cold feed entry should be inverted and MUST be positioned between the pump and the vent, and not more than 150mm (6") away from the vent connection.

There should be a minimum height - 450mm (18") - of open vent above cistern water level. If this is impossible refer below.

The vertical distance between the highest point of the system and the feed/expansion cistern water level MUST not be less than 450mm (18").

The pump MUST be fitted on the flow side of the boiler.

A suitable pump is a domestic circulator capable of providing an 11°C (20°F) temperature differential (e.g. Grundfos UPS 15/50 or equivalent). The vertical distance between the pump and feed/ expansion cistern MUST comply with the pump manufacturers minimum requirements to avoid cavitation. Should these conditions not apply, either lower the pump position or raise the cistern above the minimum requirement specified by **Caradon Ideal Limited.**

Note. *A cold water feed must be available back to the boiler, when all automatic valves are in the closed position (refer to BS. 6798) and when close coupled the feed must not be in a vertical leg.*

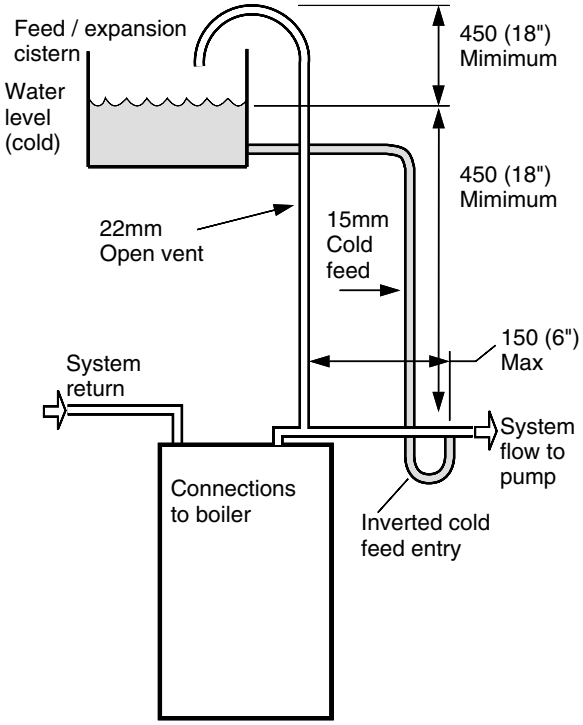

4 LOW HEAD INSTALLATIONS

The **Classic** range of boilers can be installed in low head situations by fitting a 'surge arrester' in the expansion pipe as shown.

The following conditions MUST be observed:

1. The surge arrester must be at least 42mm in diameter x 150mm long, thus ensuring a MINIMUM air gap and a MINIMUM depth of water below the static water level (cold) of 75mm.
2. The static water level (cold) must be at least 200mm above the top of the horizontal flow pipe, fitted as shown. The vent connection MUST NOT be made immediately off the top of the boiler, as venting is made less efficient.
3. The maximum practical length of 15mm cold feed pipe should be used in order to reduce the effective volume of system water expanding into the feed/expansion cistern to a minimum.

Note. *The pump manufacturers minimum requirements must be complied with*

Minimum Requirements

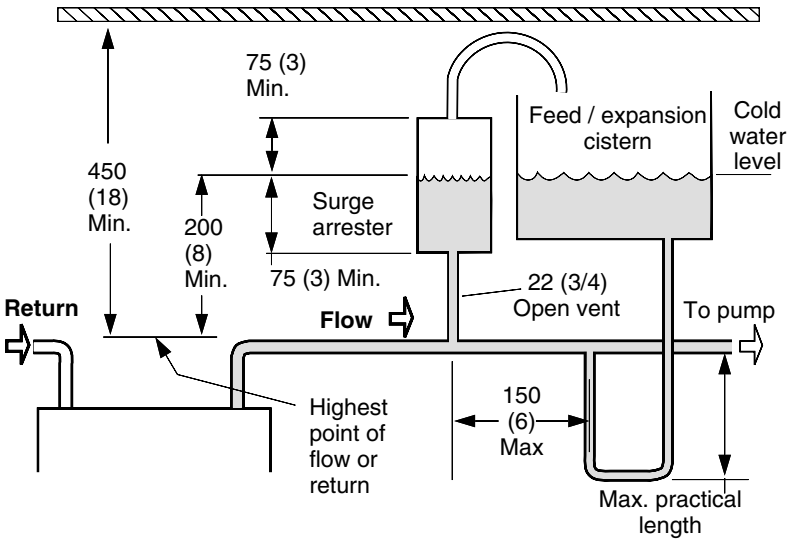

All dimensions in mm (in.). **N.B.** Imperial dimensions are approximate

5 SEALED SYSTEM REQUIREMENTS

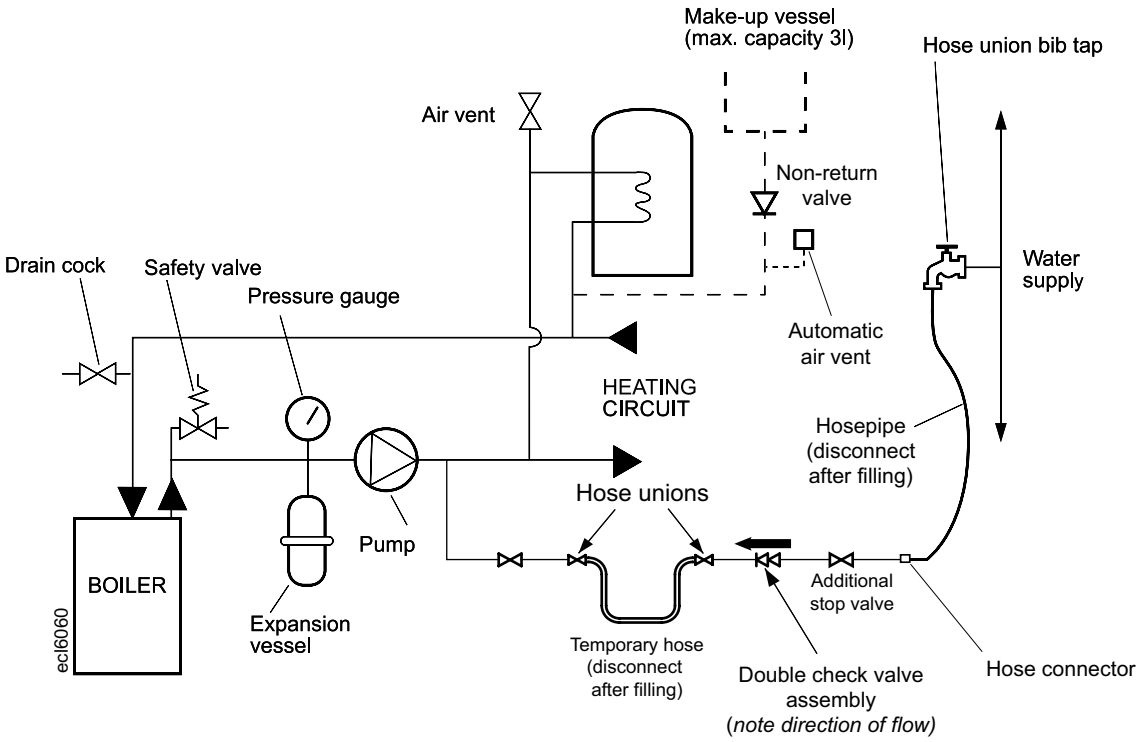

Note.

The method of filling, refilling, topping up or flushing sealed primary hot water circuits from the mains via a temporary hose connection is only allowed if acceptable to the local water authority.

1. General

a. The installation must comply with the requirements of BS.6798 and BS.5449.

b. The installation should be designed to work with flow temperatures of up to 82°C.

c. All components of the system, including the heat exchanger of the indirect cylinder, must be suitable for a working pressure of 3 bar (45 lb/in²) and temperature of 110°C. Care should be taken in making all connections so that the risk of leakage is minimised.

2. Safety Valve

A spring loaded safety valve complying with the relevant requirements of BS.6759 must be fitted in the flow pipe, as close to the boiler as possible and with no intervening valve or restriction. The valve should have the following features:

a. A non-adjustable pre-set lift pressure not exceeding 3 bar (45 lb./in²)

b. A manual testing device.

c. Provision for connection of a discharge pipe. *The valve or discharge pipe should be positioned so that the discharge of water or steam cannot create a hazard to the occupants of the premises or cause damage to electrical components and wiring.*

3. Pressure Gauge

A pressure gauge covering at least the range 0-4 bar (0-60 lb./in²) must be fitted to the system. The gauge should be easily seen from the filling point and should preferably be connected at the same point as the expansion vessel.

4. Expansion Vessel

a. A diaphragm type expansion vessel must be connected at a point close to the inlet side of the pump, the connecting pipe being not less than 15mm (1/2" nominal) size and not incorporating valves of any sort.

b. The vessel capacity must be adequate to accept the expansion of the system water when heated to 110°C (230°F)

c. The charge pressure must not be less than the static water head above the vessel The pressure attained in the system when heated to 110°C (230°F) should be at least 0.35 bar (5lb/in²) less than the lift pressure of the safety valve.

For guidance on vessel sizing refer to Table 6 in Frame 6. For further details refer to BS.5449. For IE refer to the current edition of I.S. 813.

5. Cylinder

The cylinder must be either of the indirect coil type or a direct cylinder fitted with an immersion calorifier which is suitable for operating on a gauge pressure of 0.35 bar (5lb./in²) in excess of the safety valve setting. *Single feed indirect cylinders are not suitable for sealed systems.*

6. Make-up Water

Provision must be made for replacing water loss from the system, either:

a. From a manually fitted make-up vessel with a readily visible water level. The vessel should be mounted at least 150mm (6") above the highest point of the system and be connected through a non-return valve to the system, fitted at least 300mm (12") below the make-up vessel on the return side of the domestic hot water cylinder or radiators.

b. Where access to a make-up vessel would be difficult by pre-pressurisation of the system. Refer to 'Filling.'

6 SEALED SYSTEM REQUIREMENTS - continued

7. Mains Connection

There must be no direct connection to the mains water supply or to the water storage tank supplying domestic water, even through a non-return valve, without the approval of the local water authority.

8. Filling

The system may be filled by one of the following methods:

a. Through a cistern, used for no other purposes, via a ball valve permanently connected directly to a service pipe and / or a cold water distributing pipe.

The static head available from the cistern should be adequate to provide the desired initial system design pressure. The cold feed pipe from the cistern should include a non-return valve and a stop valve with an automatic air vent connected between them, the stop valve being located between the system and the automatic air vent. The stop valve may remain open during normal operation of the system if automatic water make-up is required.

b. Through a self-contained unit comprising a cistern, pressure booster pump (if required) and, if necessary, an automatic pressure reducing valve and flow restrictor. The cistern should be supplied through a temporary connection from a service pipe or cold water distributing pipe.

This unit may remain permanently connected to the heating system to provide limited automatic water make-up. Where the temporary connection is supplied from a service pipe or distributing pipe which also supplies other draw-off points at a lower level then a double check valve shall be installed upstream of the draw-off point.

c. Through a temporary hose connection from a draw-off tap supplied from a service pipe under mains pressure. Where the mains pressure is excessive a pressure-reducing valve shall be used to facilitate filling.

The following fittings shall form a permanent part of the system and shall be fitted in the order stated:

A stop valve complying with the requirements of BS. 1010, Part 2 (the hose from the draw-off tap shall be connected to this fitting).

A test cock.

A double check valve of an approved type.

- Thoroughly flush out the whole of the system with cold water, without the pump in position.
- With the pump fitted, fill and vent the system until the pressure gauge registers 1.5 bar (21.5lb/in^2).

  Examine for leaks.
- Check the operation of the safety valve by manually raising the water pressure until the valve lifts. This should occur within ± 0.3 bar (± 4.3lb/in^2) of the pre-set lift pressure.
- Release water from the system until the initial system design pressure is reached.
- Light the boiler and heat the system to the maximum working temperature. Examine for leaks.
- Turn off the boiler and drain the system while still hot.
- Refill and vent the system.

Sizing procedure for expansion vessels: The volume of the expansion vessel (litres) fitted to a sealed system shall not be less than that given by Table 6, multiplied by a factor of 0.8 (for flow temperatures of less than 88 °C).

Table 6

Safety valve setting	3.0 bar			2.5 bar			2.0 bar	
Vessel charge and initial system pressure	0.5 bar	1.0 bar	1.5 bar	0.5 bar	1.0 bar	1.5 bar	0.5 bar	1.0 bar
Total water content of system (litres)	Expansion vessel volume (litres)							
25	2.1	2.7	3.9	2.3	3.3	5.9	2.8	5.0
50	4.2	5.4	7.8	4.7	6.7	11.8	5.6	10.0
75	6.3	8.2	11.7	7.0	10.0	17.7	8.4	15.0
100	8.3	10.9	15.6	9.4	13.4	23.7	11.3	20.0
125	10.4	13.6	19.5	11.7	16.7	29.6	14.1	25.0
150	12.5	16.3	23.4	14.1	20.1	35.5	16.9	30.0
175	14.6	19.1	27.3	16.4	23.4	41.4	19.7	35.0
200	16.7	21.8	31.2	18.8	26.8	47.4	22.6	40.0
225	18.7	24.5	35.1	21.1	30.1	53.3	25.4	45.0
250	20.8	27.2	39.0	23.5	33.5	59.2	28.2	50.0
275	22.9	30.0	42.9	25.8	36.8	65.1	31.0	55.0
300	25.0	32.7	46.8	28.2	40.2	71.1	33.9	60.0
Multiplying factors for other system volumes	0.0833	0.109	0.156	0.094	0.134	0.237	0.113	0.20

7 BOILER ASSEMBLY - Exploded view

Classic Slimline FF 330 shown

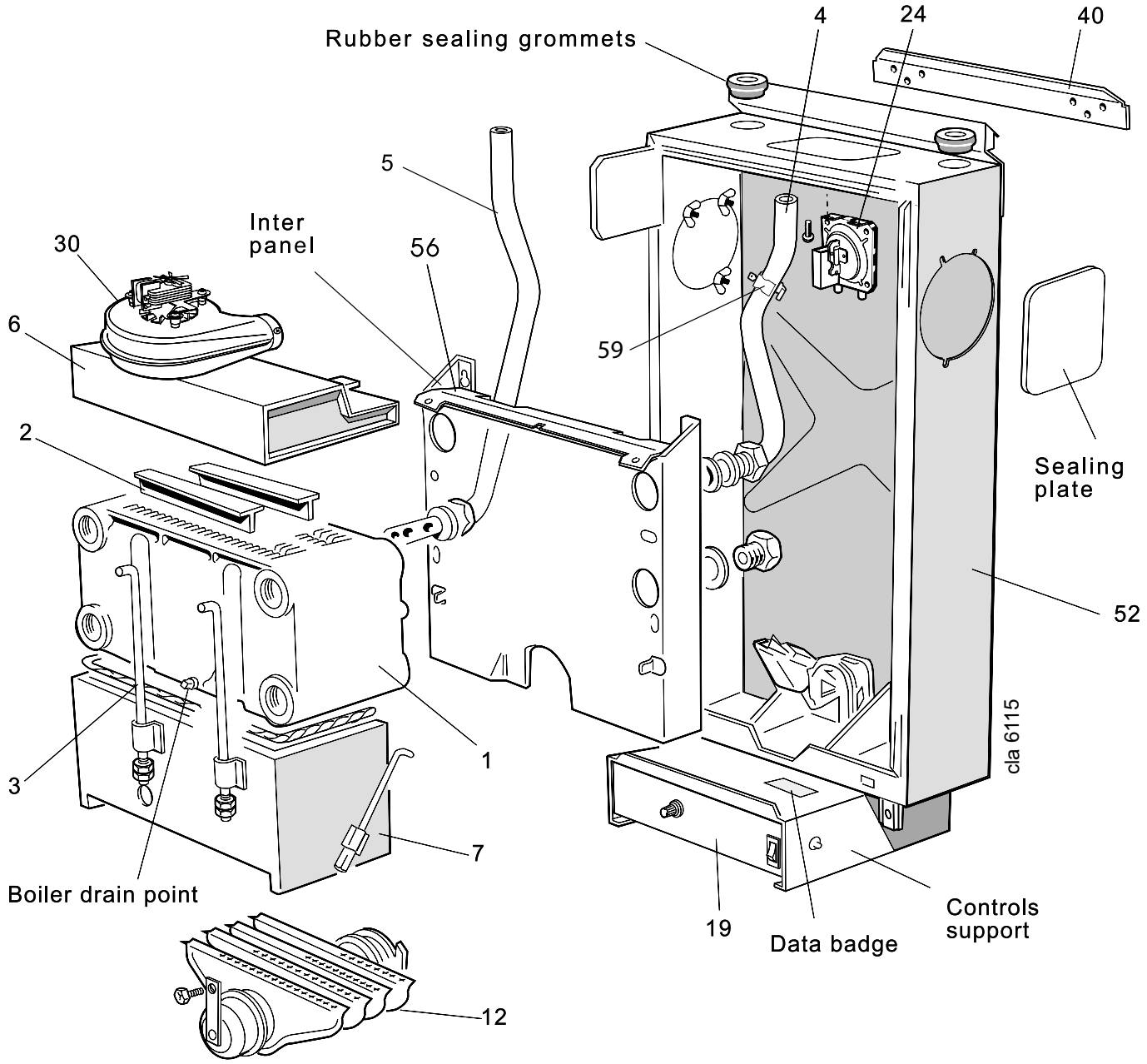

LEGEND

1. Heat exchanger.
2. Flue baffles.
3. Hook bolts
4. Flow pipe assy.
5. Return pipe assy.
6. Collector hood assembly.
7. Combustion chamber.
12. Main burner.
19. Control box .
24. Pressure switch.
30. Fan.
40. Wall mounting plate.
52. Back panel.
56. Baffle plate (350/360 only).
59. Limit thermostat

8 UNPACKING

The boiler is supplied fully assembled in **Pack A,** together with a standard flue assembly for lengths up to 600mm (23 1/2"), rear or side flue outlet, in **Pack B.**

Unpack and check the contents.

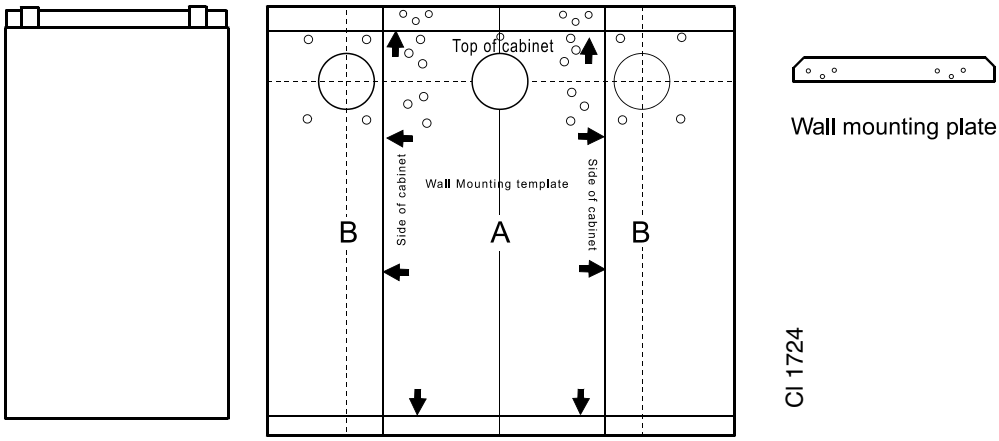

Complete boiler

Wall mounting template

Pack A Contents

- The complete boiler
- Installation & Servicing Instructions
- User's Instructions
- Hardware Pack (listed below)
- Wall mounting template
- Wall mounting plate
- Side outlet terminal mounting plate
- Flue extension tube - 1 off
- Boiler sealing ring - 1 off
- Flue elbow (for side outlet only)
- Cupboard installation kit

Hardware Pack Contents

- 50mm x No. 14 wood screw .... 4 off
- 50mm x No. 10 wood screw .... 8 off
- Wall plug ..... 12 off
- M8 washer ..... 1 off
- M5 wing nut ..... 3 off
- Sealing plate ..... 1 off
- M8 x 12 Hx. Hd. screw ..... 1 off

Pack B Contents

- Duct cutting support ..... 2 off (cardboard)
- Terminal wall plate ..... 1 off
- Terminal grille assy. ..... 1 off
- Polyurethane foam seal 400 lg. ..... 1 off
- No. 8 x 8 lg. Pozi pan hd. screws ..... 3 off

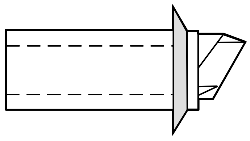

Flue terminal

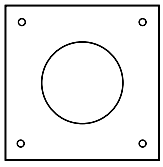

Terminal wall plate

9 PACKAGING AND CASING REMOVAL

1. Unpack the boiler.
2. Remove the casing as follows and place to one side to avoid damage.
   a. Undo the 2 casing retaining screws (a) retaining the casing to the back panel.
   b. Swing the bottom of the boiler casing up until the controls pod casing has cleared the controls then unhook the top from the back panel.
3. Remove the boiler from its packaging base. The boiler may now be stood upright on its controls support protection frame to ease handling and installation.
4. Unpack the boiler terminal box and, if applicable, the extension flue box(es).

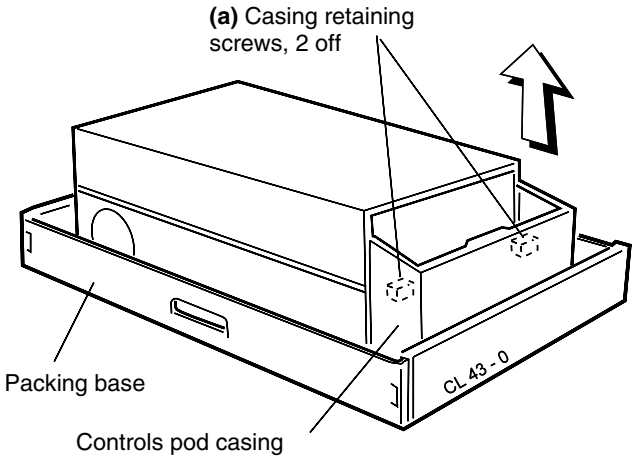

10 DETERMINING THE FLUE LENGTH

It is MOST IMPORTANT that the boiler is installed in a vertical position.

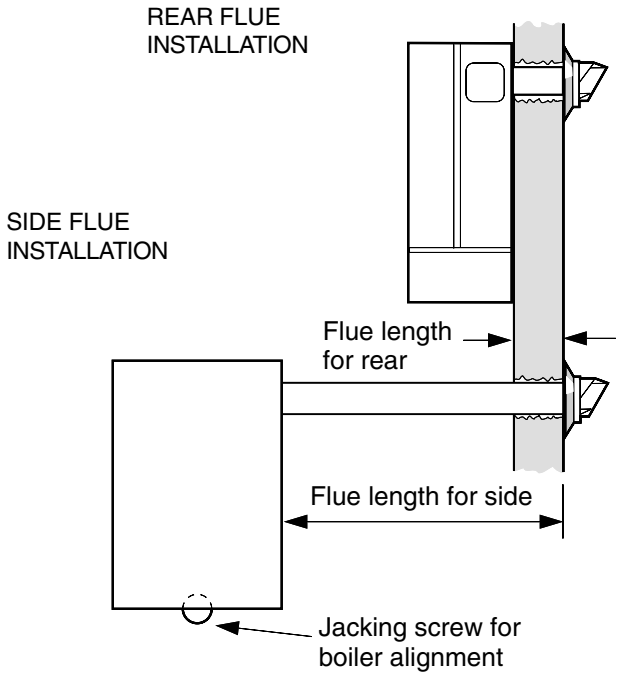

FLUE KITS

Pack B: supplied as standard.

Pack D: optional extension kit for side flue or rear flue outlet. Refer to 'Flue Extension Ducts'

A maximum of 1 extension duct (plus the standard flue duct) may be used together.

Note: *The total length must not exceed 1 metre.*

Flue length mm	Accessories	Product No.
Up to 600	B Pack 1 off	150308
600 to 1000	B Pack 1 off + D Pack 1 off	150308 + 153883

11 FLUE ASSEMBLY - Exploded View

1. An optional flue duct extension kit is required for wall thicknesses greater than 600mm (23 1/2") Refer to Frame 10.
2. When cutting the ducts, always use the cardboard support rings provided.

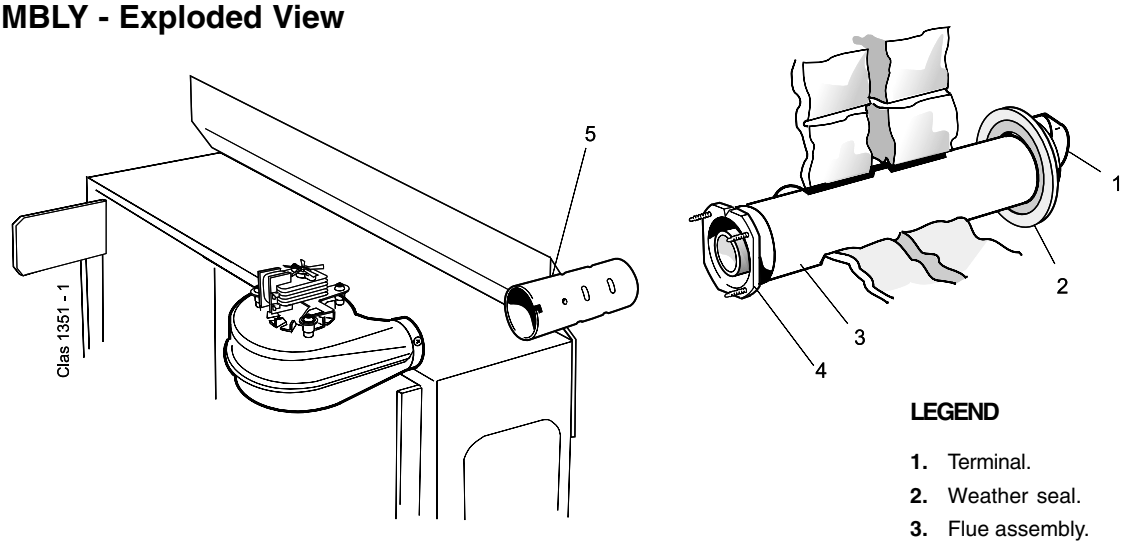

LEGEND

1. Terminal.
2. Weather seal.
3. Flue assembly.
4. Boiler sealing ring.
5. Flue extension tube.

12 WALL MOUNTING TEMPLATE

1. Separate the templates.
2. Tape the templates into the selected position.
3. Ensure squareness by hanging a plumb line as shown.
4. Mark onto the wall (if required) the following:
   - **a.** The wall mounting plate screw positions (choose one from each group). **Note.** *Mark the centre of the flue hole as well as the circumference.*
   - **b.** The position of the flue duct hole.
5. Remove the templates from the wall.

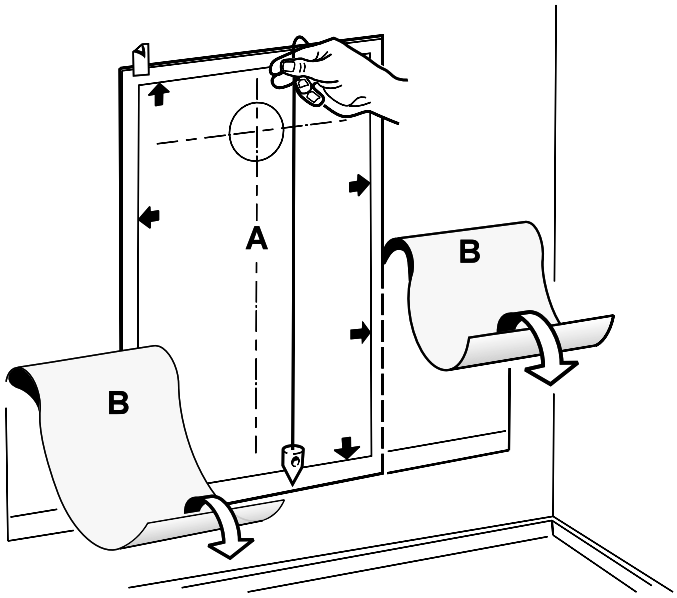

13 PREPARING THE WALL

IMPORTANT. Ensure that, during the cutting operation, masonry falling outside of the building does not cause damage or personal injury.

1. Cut the flue hole, preferably with a 125mm (5") core boring tool, ensuring that the hole is square to the wall. If the hole has been quite accurately cut with a drill then making good the wall faces is not essential as seals are provided at both ends of the flue. However, both wall faces immediately around the cut hole should be flat; make good if necessary. For less accurate holes make good to approximately 125mm (5") diameter at the 2 wall faces.
2. Drill 2 holes for the wall mounting plate with an 8mm (5/16") masonry drill.
3. Drill 1 further hole above the flue hole for boiler fixing with the same 8mm (5/16") drill.
4. Insert the plastic plugs provided.

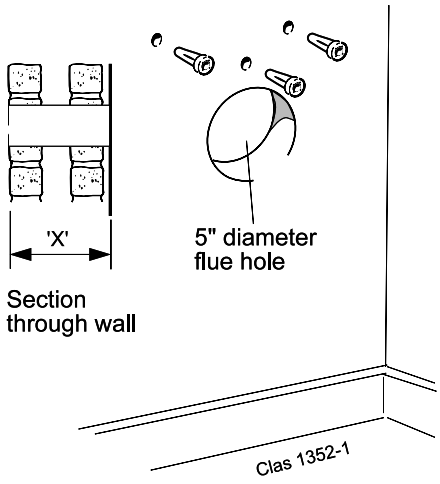

Note. *If the terminal is to be sited within 25-40mm of a corner or vertical pipe (refer to Table 3) then the hole MUST be accurately cut and the rubber weather seal trimmed around the groove provided. The terminal wall plate need not be fitted.*

Note. *Check all of the hole positions BEFORE drilling*

14 CUTTING THE FLUE - wall thicknesses of 114 to 600mm

1. Measure and note the wall thickness X.
2. Mark the wall thickness onto the flue.
3. To ensure the tube is cut square, mark the flue all the way round.
4. Cut to length X, using the cardboard ring for support.
5. Remove cardboard ring and remove any burrs.

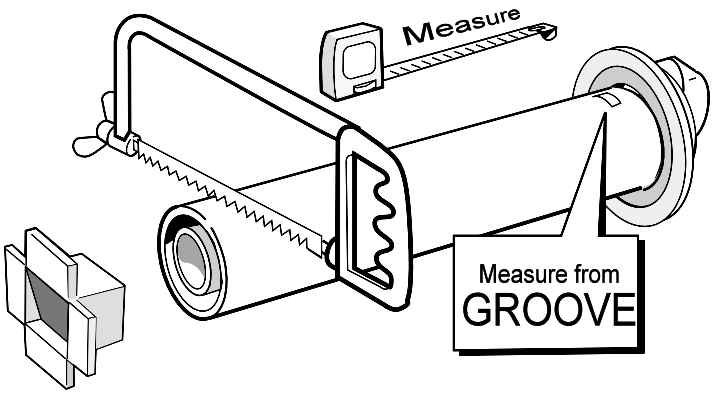

15 FITTING THE BOILER SEALING RING TO THE FLUE

1. Fit the boiler sealing ring inside the outer flue duct. Ensure the boiler sealing ring is fully engaged.

   Ensure the notch aligns with the groove on the outer flue duct. This ensures correct alignment of the flue terminal.

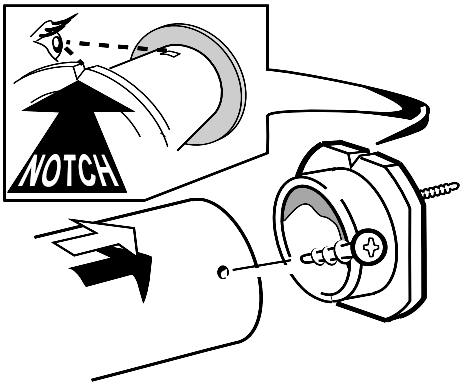

2. Drill 3 holes 3.2mm (1/8") dia. through the outer flue duct and boiler sealing ring. **Do NOT drill the inner flue duct.**
3. Insert the self-tapping screws, provided, in order to fix the boiler sealing ring in position.
4. Stick the self-adhesive foam strip, provided in the hardware pack, onto the flue immediately behind the boiler sealing ring.

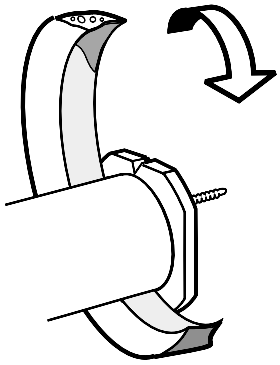

16 FITTING THE FLUE ASSEMBLY

1. Insert the flue extension tube into the flue assembly.
2. Insert the flue assembly through the hole far enough to allow the rubber seal to unfold completely and form an adequate seal on the outside wall.
3. Ensure the notch is at the top. This will aid the location of the studs into the boiler back panel.

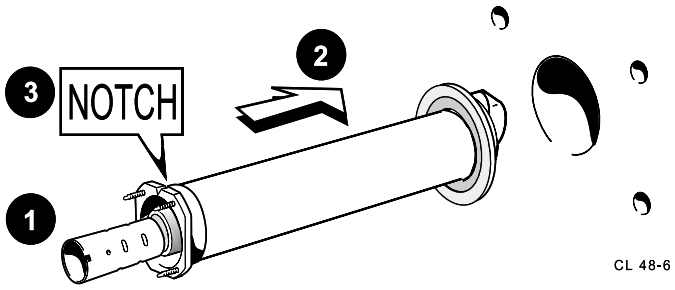

17 WALL MOUNTING PLATE

1. Fix the mounting plate to the wall with the No.14 x 50mm wood screws.
2. Check with a spirit level that the plate is horizontal.
3. **Cupboard Supports**
   In some applications existing wooden supports my hinder the removal of the casing. Two cupboard supports are provided for the top and bottom of the opening. These should be positioned to allow the casing to be removed in servicing.

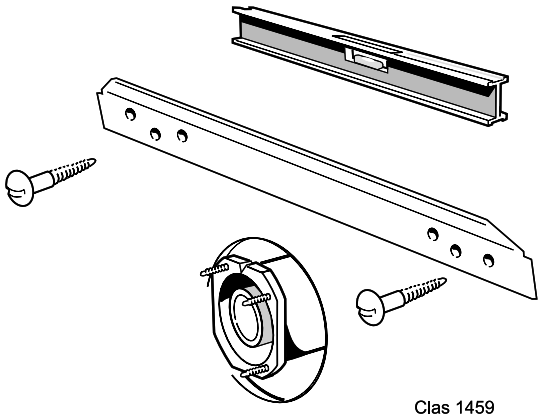

18 MOUNTING THE BOILER

1. Lift the boiler onto the wall mounting plate as shown.

   Do not use the burner / controls for lifting

2. Fit an additional No.14 x 50mm woodscrew through the slot in the boiler back panel above the flue into the wall plug. Use the washer and rectangular sealing plate to seal the slot and retain the boiler.

Note.

Before fully tightening the retaining screw check the boiler alignment, using a spirit level, and adjust as necessary with the jacking screw.

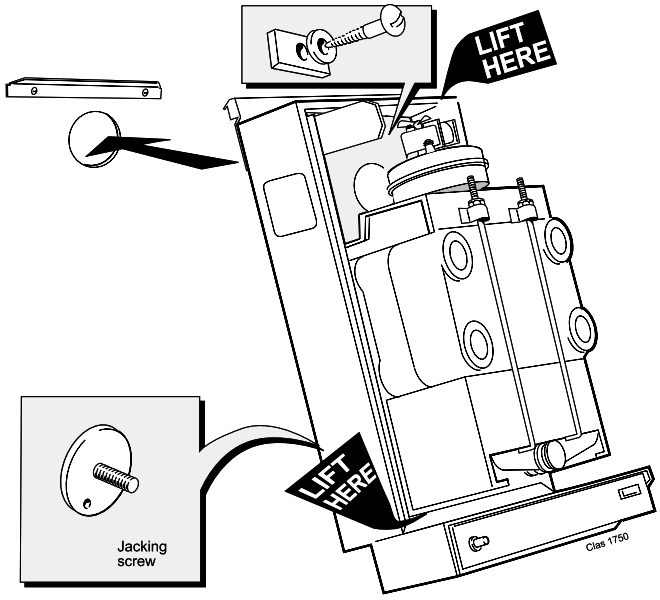

19 CONNECTING THE FLUE TO THE BOILER

1. Pull the flue through and locate the 3 studs in the holes in the back panel.
2. Secure the flue to the boiler using the three M5 wing nuts provided.
3. Pull the flue extension tube and engage onto the fan. Locate and secure with the M4 screw attached to the fan.

Note.

The sealing ring studs will locate in the back panel one way only. This will ensure that the terminal grille is correctly aligned.

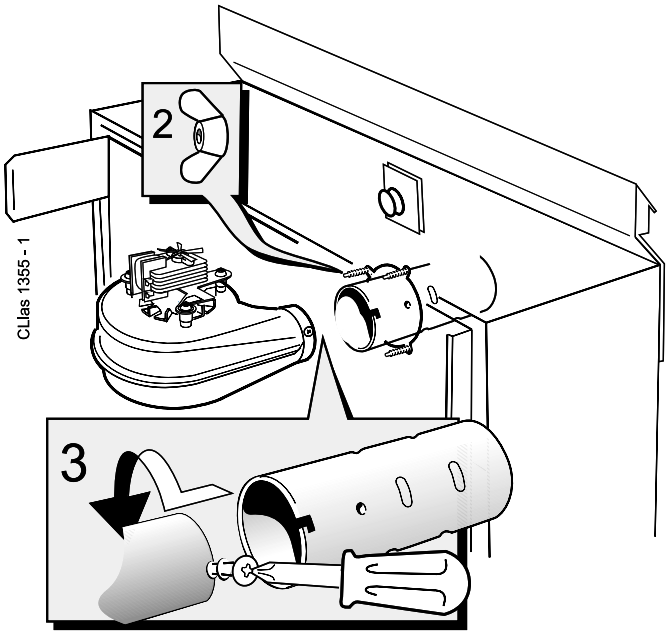

20 TERMINAL WALL PLATE

This plate allows neat concealment and full compression of the rubber seal. Its use is not essential if the flue hole and flue ducts have been accurately cut and the outside wall face is flat.

1. Position the terminal wall plate over the terminal.
2. Mark and drill 4 fixing holes with an 7mm (9/32") masonry drill.
3. Insert the 4 plastic plugs provided.
4. Secure the plate with 4 of the No.10 x 2" screws provided.

Note. *If the terminal is less than 2m (6' 6") above ground level, an approved terminal guard should be fitted. Refer to the Contents List on Page 3.*

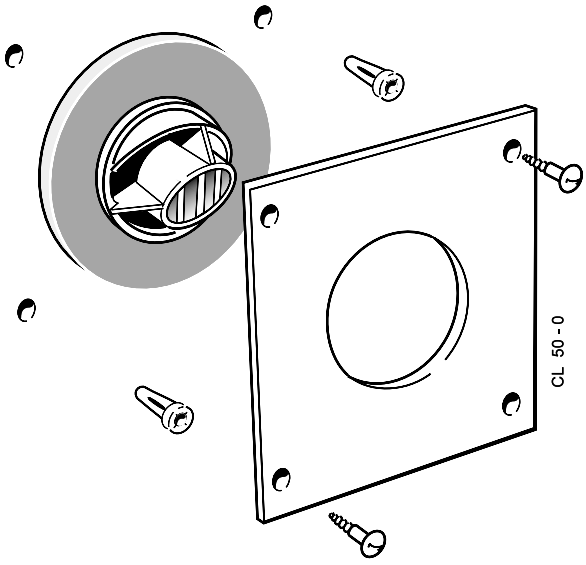

21 FLUE ASSEMBLY - Exploded view

For wall thickness 114mm to 600mm

1. An optional flue duct extension kit is required for lengths (distance from the outside wall to the relevant side of the boiler casing) greater than 600mm (23 1/2") Refer to Frame 10.
2. When cutting the ducts always use the cardboard support provided.

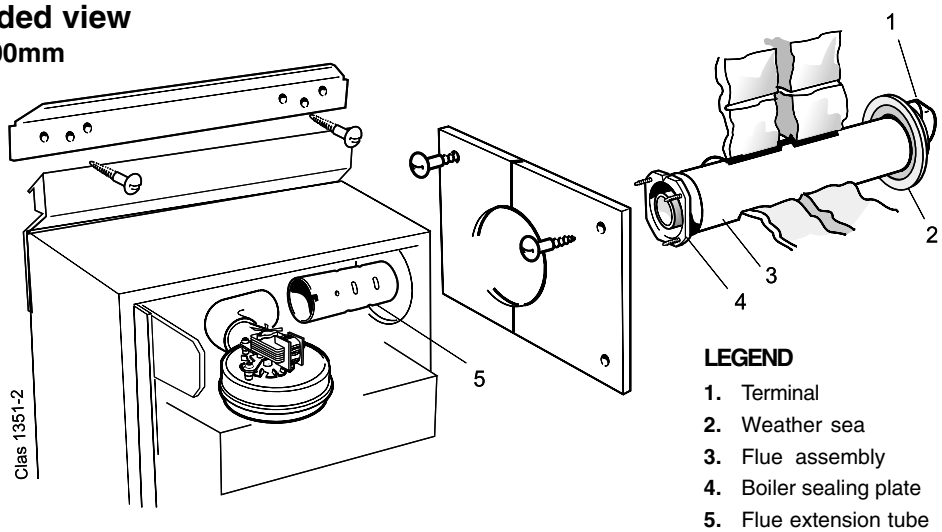

LEGEND

1. Terminal
2. Weather sea
3. Flue assembly
4. Boiler sealing plate
5. Flue extension tube

22 WALL MOUNTING TEMPLATE

1. Separate the templates.
2. Tape both templates into the selected position locating template B through an extended centre line as shown.
3. Ensure squareness by hanging a plumb line as shown.
4. Mark onto the wall (if required) the following:
   - **a.** The 4 wall mounting plate screw positions (choose one from each group).
   - **b.** The 4 screw positions for the side outlet plate.
   - **c.** The position of the flue duct hole. **Note.** *Mark the centre of the hole as well as the circumference.*
   - **d.** The side of the casing nearest the flue outlet.
5. Remove both templates from the wall.

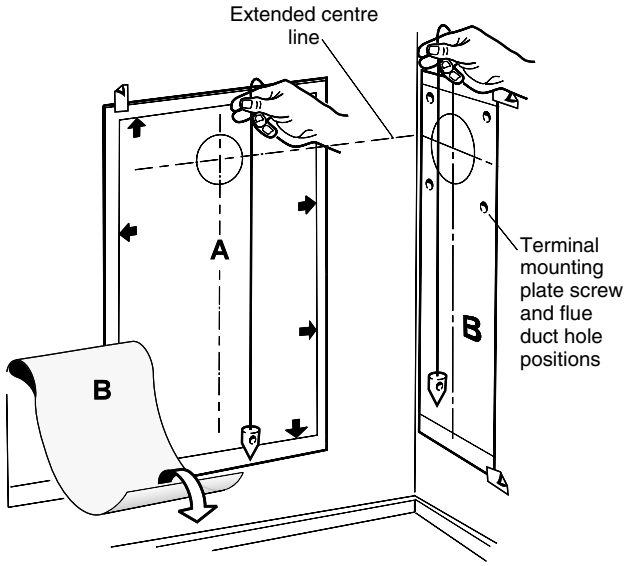

23 PREPARING THE WALL

IMPORTANT. Ensure that, during the cutting operation, masonry falling outside of the building does not cause damage or personal injury.

1. Cut the flue hole, preferably with a 125mm (5") core boring tool, ensuring that the hole is square to the wall. If the hole has been accurately cut with a drill then making good the wall faces is not essential as seals are provided at both ends of the flue. However, both wall faces immediately around the cut hole should be flat; make good if necessary. For less accurate holes make good to approximately 125mm (5") diameter at the 2 wall faces.
2. Drill 2 holes with an 8mm (5/16") masonry drill and insert the plastic plugs provided, for the wall mounting plate.
3. Drill 1 further hole below the wall plate fixing screws, in the position shown on the template, for boiler fixing with the same 8mm (5/16") masonry drill and insert the plastic plug provided.
4. Drill 4 holes with a 7mm (9/32") masonry drill and insert the plastic plugs provided, for the side mounting plate.

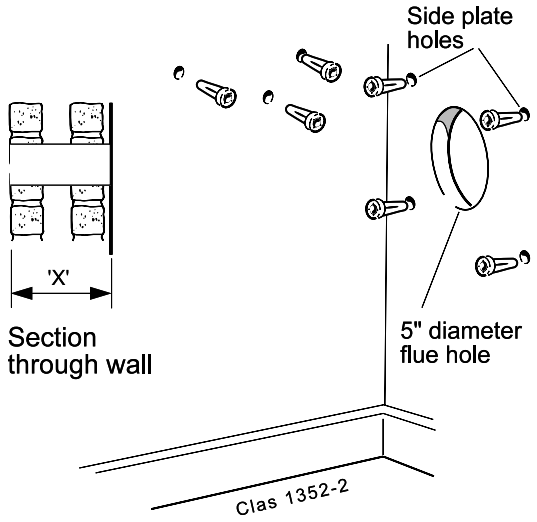

Note. *If the terminal is to be sited within 25-40mm of a corner or vertical pipe (refer to Table 3) then the hole MUST be accurately cut and the rubber weather seal trimmed around the groove provided. The terminal wall plate need not be fitted.*

24 CUTTING THE FLUE
For flue lengths 114 to 600mm ONLY

1. Measure the flue length required (i.e. the distance from the side of the boiler to the outside face of the wall). Refer to Frame 10.
2. Mark the flue length required onto the flue, measuring from the groove near the terminal.
3. To ensure the tube is cut square, mark the flue all the way round.
4. Insert the cardboard duct ring for support and cut to length.
5. Remove cardboard duct ring and remove any burrs.

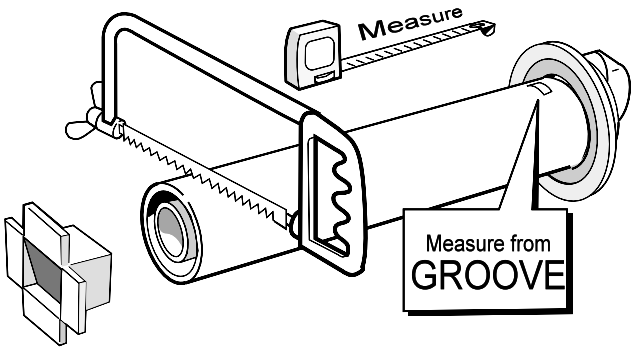

For flue lengths greater than 600mm refer to Frames 34 & 35 - Flue extension ducts.

25 FITTING THE FOAM SEAL

1. To determine the position for the foam seal measure the wall thickness and mark it onto the flue, measuring from the groove near the terminal.
2. Wrap the self-adhesive foam strip round the flue, ensuring that the foam is on the terminal side of the line. This seals the gap between the flue and the wall.

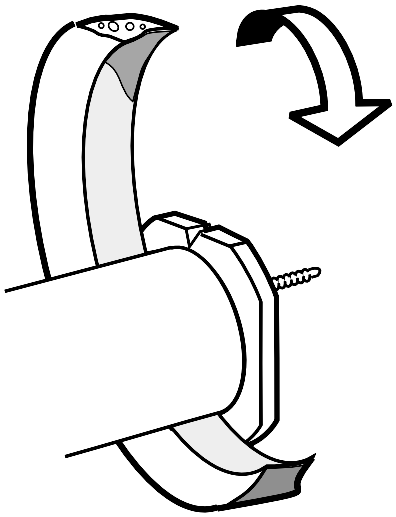

26 FITTING BOILER SEALING RING TO THE FLUE

1. Fit the boiler sealing ring inside the outer flue duct. Ensure the boiler sealing ring is fully engaged. Ensure the notch aligns with the groove on the outer flue duct. This ensures correct alignment of the flue terminal.
2. Drill 3 holes 3.2mm (1/8") dia. through the outer flue duct and boiler sealing ring. ***Do not drill the inner flue duct.***
3. Insert the self tapping screws, provided, in order to fix the boiler sealing ring in position.

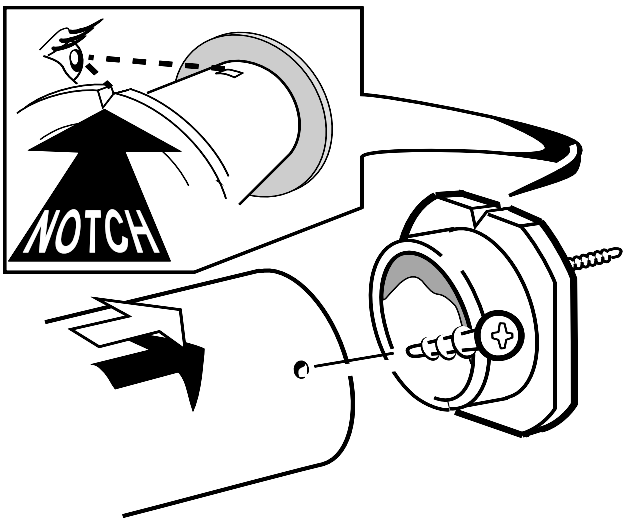

27 FITTING THE FLUE ASSEMBLY

1. Insert the flue assembly through the hole far enough to allow the rubber seal to unfold completely and form an adequate seal on the outside wall. This will also ensure the correct alignment of the flue terminal.
2. Ensure the notch is at the top. This will aid the location of the studs into the boiler back panel.

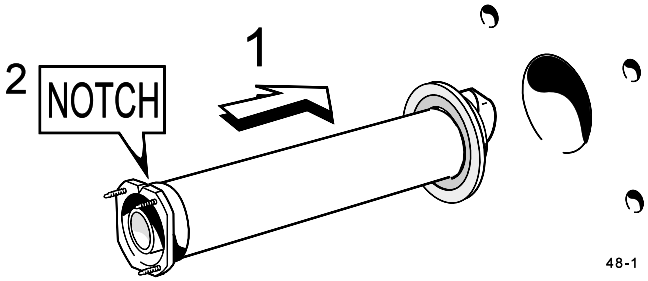

28 FITTING THE SIDE OUTLET PLATES

Note. *If the boiler is fitted closer than 25mm to the side wall the side outlet plate must be fitted now.*

1. Split the side outlet plate into 2 down the split line.
2. Fit the 2 halves of the side outlet plate to the wall, ensuring they are behind the boiler sealing ring.

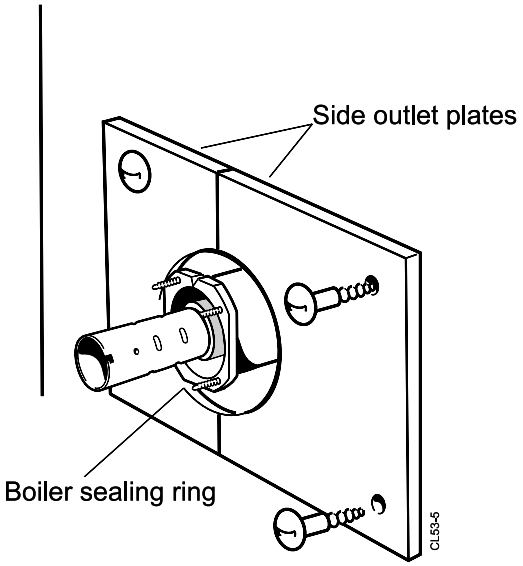

29 WALL MOUNTING PLATE

1. Fix the mounting plate to the wall with the No.14 x 50mm wood screws.
2. Check with a spirit level that the plate is horizontal.
3. **Cupboard Supports**
   In some applications existing wooden supports may hinder the removal of the casing. 2 cupboard supports are provided for the top and bottom of the opening. These should be positioned to allow the casing to be removed in servicing.

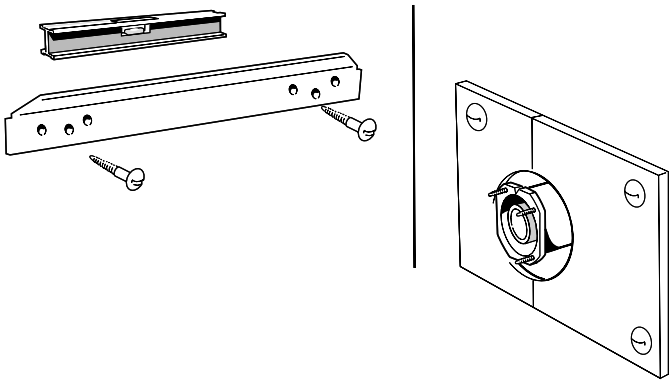

30 MOUNTING THE BOILER

1. The boiler is supplied for rear outlet installation. Remove the blanking plate from the direction required and use this to blank off the rear outlet.
2. Lift the boiler onto the wall mounting plate, as shown. ***Do not use the burner/ controls for lifting.***
3. Fit the No. 14 x 50mm wood screw, washer and rectangular plate to retain the boiler.

Note. *Before fully tightening the retaining screw check the boiler alignment, using a spirit level, and adjust as necessary with the jacking screw.*

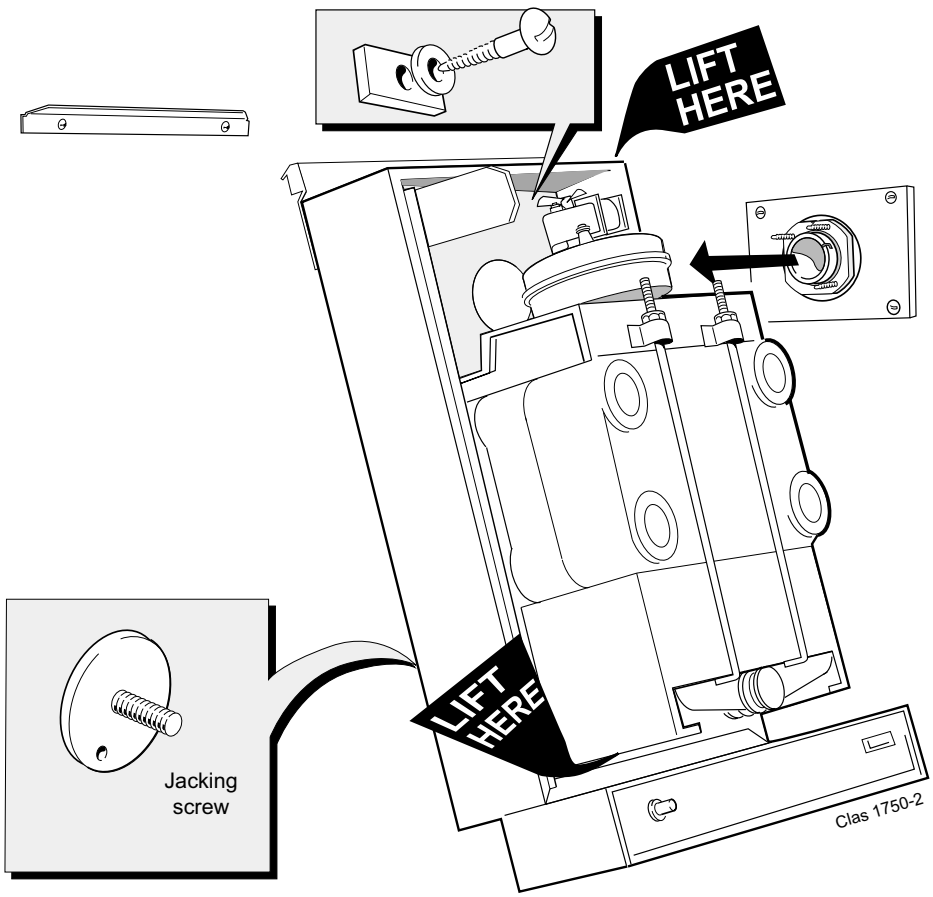

31 CONNECTING THE FLUE TO THE BOILER

1. Pull the flue through the side outlet plate and locate the 3 studs in the hole in the side of the boiler.
2. Secure the flue to the boiler using the three M5 nuts provided.
3. Insert the flue extension tube into the flue.
4. Fit the 90° flue elbow, supplied with the boiler, onto the fan in the direction required, after first removing the underside screw, which is not required. Secure in position with the screw attached to the fan.
5. Pull the flue extension tube and engage onto the fan elbow and secure with the screw attached to the elbow.

Note. *The sealing ring studs will locate in the back panel one way only. This will ensure that the terminal grille is correctly aligned.*

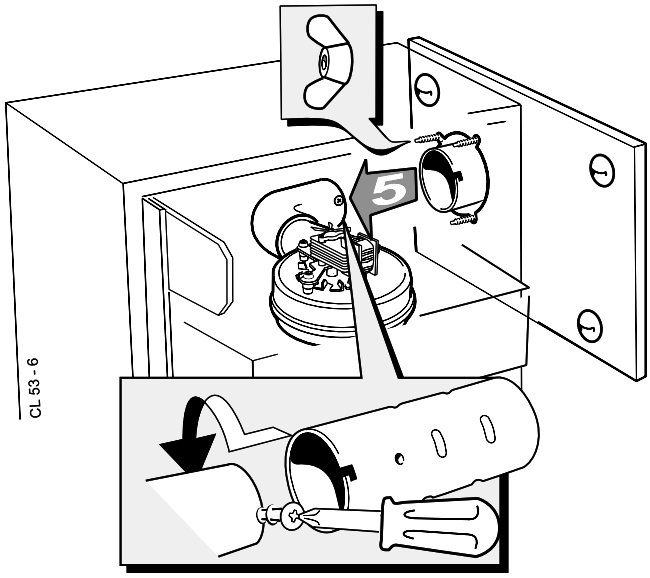

32 TERMINAL WALL PLATE

This plate allows neat concealment and full compression of the rubber seal. Its use is not essential if the flue hole and flue ducts have been accurately cut and the outside wall face is flat.

1. Position the terminal wall plate over the terminal.
2. Drill 4 fixing holes with a 7mm (9/32") masonry drill.
3. Insert the 4 plastic plugs provided.
4. Secure the plate with 4 of the No.10 x 2" screws provided.

Note. *If the terminal is less than 2m (6' 6") above ground level, an approved terminal guard should be fitted. Refer to the contents list on Page 3.*

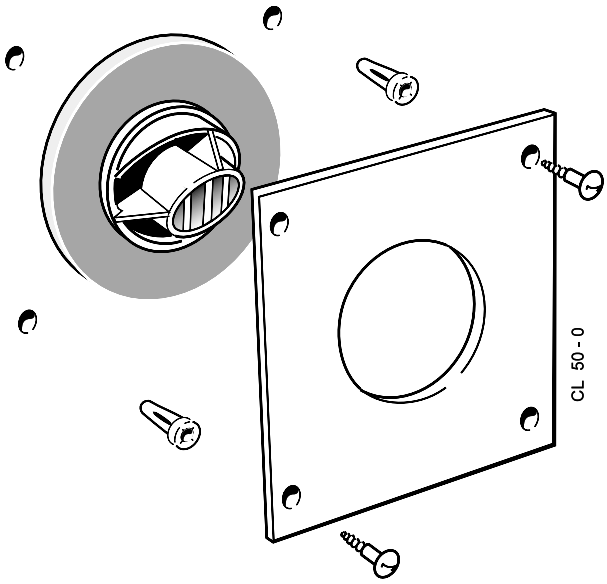

33 FLUE EXTENSION DUCTS - For flue lengths greater than 600mm

PACK D Flue extension duct kit contents.

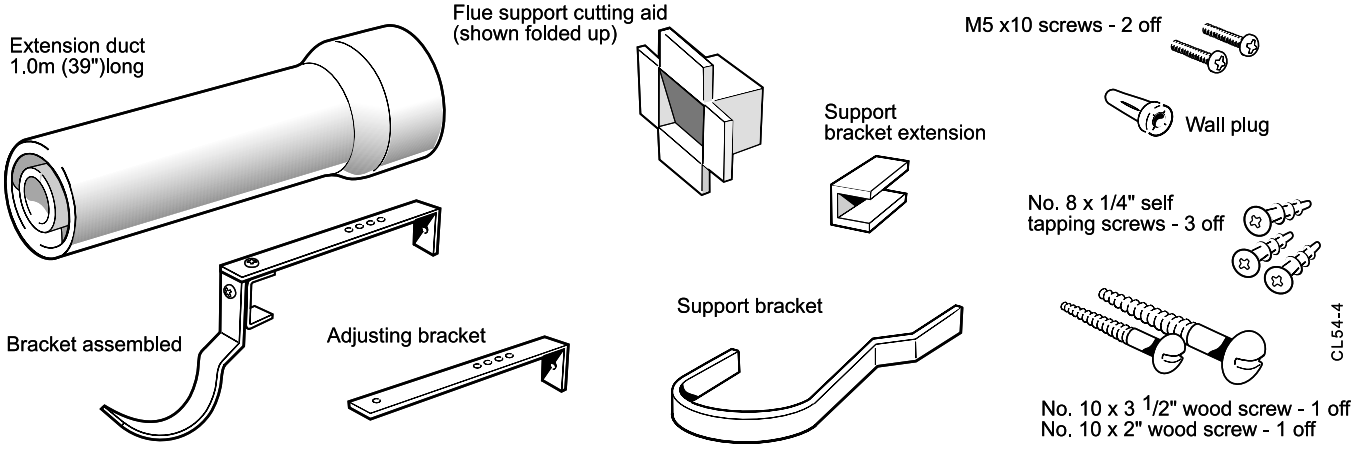

34 FLUE EXTENSION DUCTS - continued

General arrangement

Note.
Side flue shown.

A *maximum* of 1 extension duct (plus the standard flue duct) may be used together.

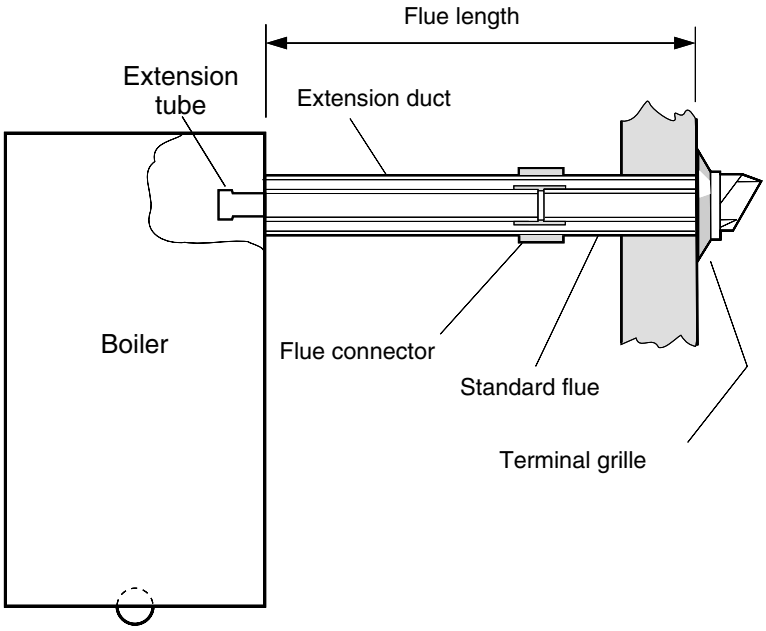

Flue length	Accessories	Product No.
Up to 600	B Pack 1 off	see Frame 10
600 to 1000	B Pack 1 off + D Pack 1 off	see Frame 10

35 FITTING THE KIT

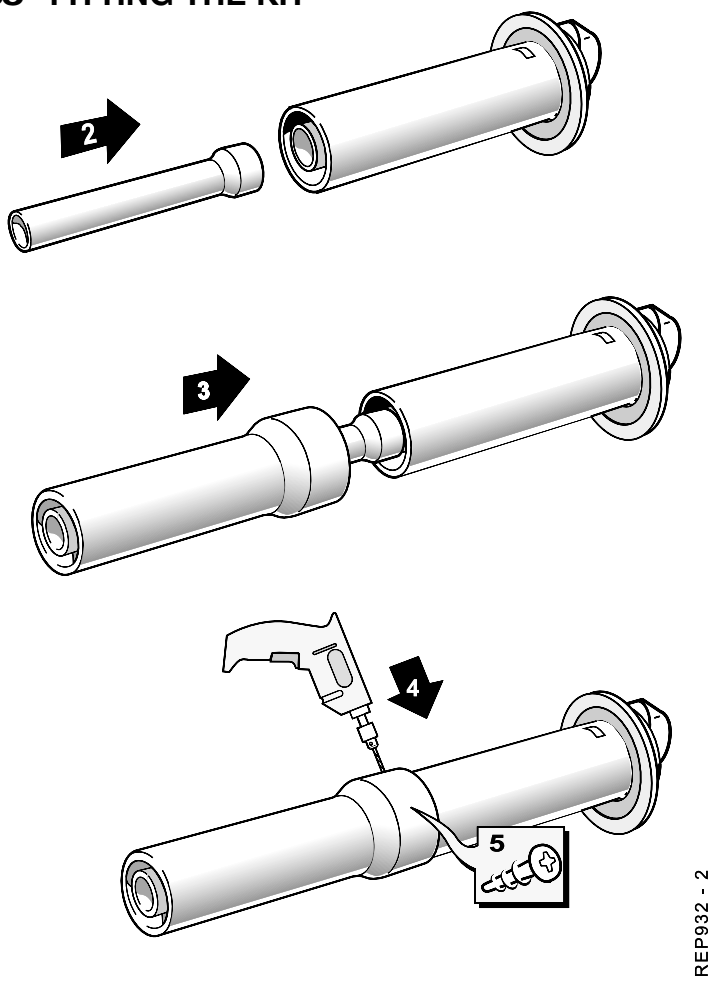

1. Remove the cardboard support aid from the flue and place safely to one side.
2. Fit the inner flue extension duct onto the inner flue duct.
3. Fit the outer flue extension duct onto the outer air duct.
4. Drill 3 - 3.2mm (1/8") dia. holes through the outer air duct. ***Do not drill the inner flue duct.***
5. Insert the self tapping screws provided to fix the air duct in position.

36 GAS CONNECTION

Refer to 'Gas Supply ', page 7.
Refer to Frame 2 for gas inlet service dimensions.

A **minimum** pressure of 20 mbar MUST be available at the boiler inlet with the boiler operating. The main gas cock is on the left hand side of the gas control valve, as shown. To facilitate connection the gas cock may be removed from the gas control valve.

37 WATER CONNECTIONS

1. Remove the plastic plugs from the flow and return pipes.
2. Make all water connections and check for water soundness.

38 ELECTRICAL CONNECTIONS

WARNING. The appliance must be efficiently earthed.

A mains supply of 230 V ~ 50 Hz is required.

All external controls and wiring must be suitable for mains voltage. Wiring should be in 3-core PVC insulated & sheathed cable, not less than 0.75mm² (24 x 0.2mm) to BS. 6500 Table 16 Wiring Regulations and local regulations. For IE reference should be made to the current ETCI rules for electrical installations.

Connection must be made in a way that allows complete isolation of the electrical supply - such as a double pole switch, having a 3mm (1/8") contact separation in both poles or a plug and socket, serving only the boiler and system controls. The means of isolation must be accessible to the user after installation.

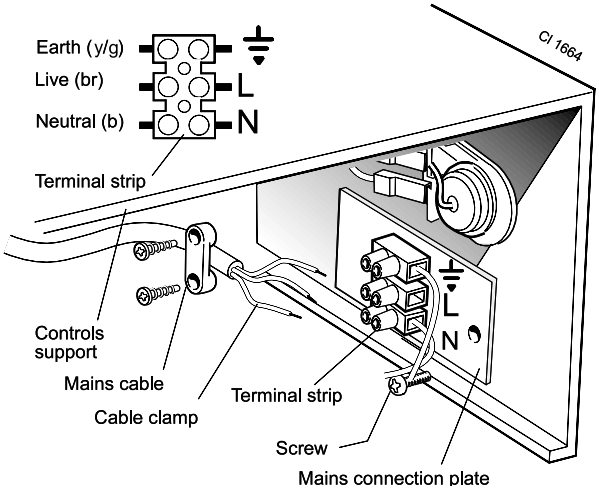

Flow wiring diagram

ALL EARTHS must be connected
(Not all earths are shown for clarity)

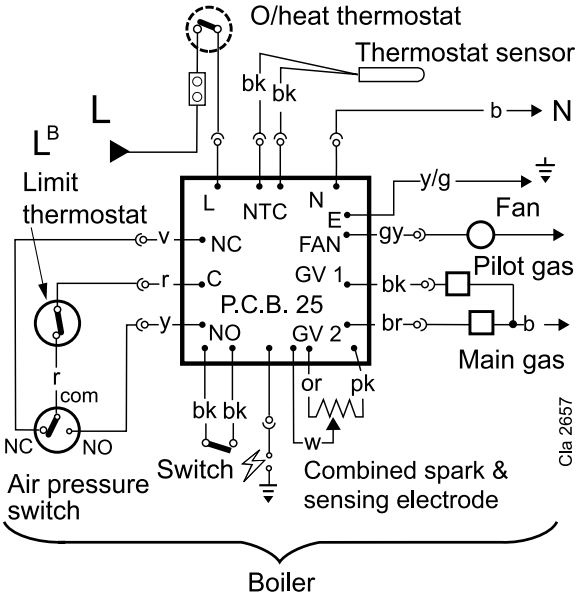

LEGEND

b	blue	**or**	orange	**w**	white
bk	black	**pk**	pink	**y/g**	yellow/green
br	brown	**r**	red		
gy	grey	**v**	violet		

1. Remove the control box securing screw (M4 pozi). Pull the box forward to disengage. Refer to Frame 58.
2. Route the mains cable through the grommet in the plate of the control box.
3. Remove the screw and release the mains connection plate. Unscrew the cable clamp screws and remove the clamp.
4. Connect the mains cable wires to the terminal strip.
5. Assemble in reverse order.
6. Replace the control box and fasten to the controls support.

39 EXTERNAL CONTROLS

External wiring must be in accordance with the current I.E.E. (BS 7671) Wiring Regulations. For Ireland reference should be made to the current ETCI rules for electrical installations.

The wiring diagrams illustrated in Frames 41-43 cover the systems most likely to be fitted to this appliance.

For wiring external controls to the Classic FF boiler, reference should be made to the system wiring diagrams supplied by the relevant manufacturer, in conjunction with the wiring diagrams shown in Frames 41-43.

Difficulty in wiring should not arise, providing the following directions are observed:

1. Controls that switch the system on or off, e.g. a time switch, must be wired, in series, in the live mains lead to the boiler.
2. Controls that override an on/off control, e.g. frost thermostat, must be wired into the mains lead, in parallel, with the control(s) to be overridden. Refer to Frame 43.
3. If a proprietary system is used, follow the instructions supplied by the manufacturer.
4. System designs featuring controls or wiring arrangements which allow the boiler to fire when there is no pump circulation taking place should not be fitted.

Advice on required modifications to the wiring may be obtained from the component manufacturers.

Notes.

1. *Connection between a frost thermostat and the time control should be made without disturbing other wiring.*
2. *A frost thermostat should be sited in a cool place in the house, but where it can sense heat from the system.*

40 PICTORIAL WIRING

LEGEND

- **b** blue
- **bk** black
- **br** brown
- **r** red
- **y** yellow
- **w** white
- **or** orange
- **v** violet
- **p** pink
- **gy** grey
- **y/g** yellow/green

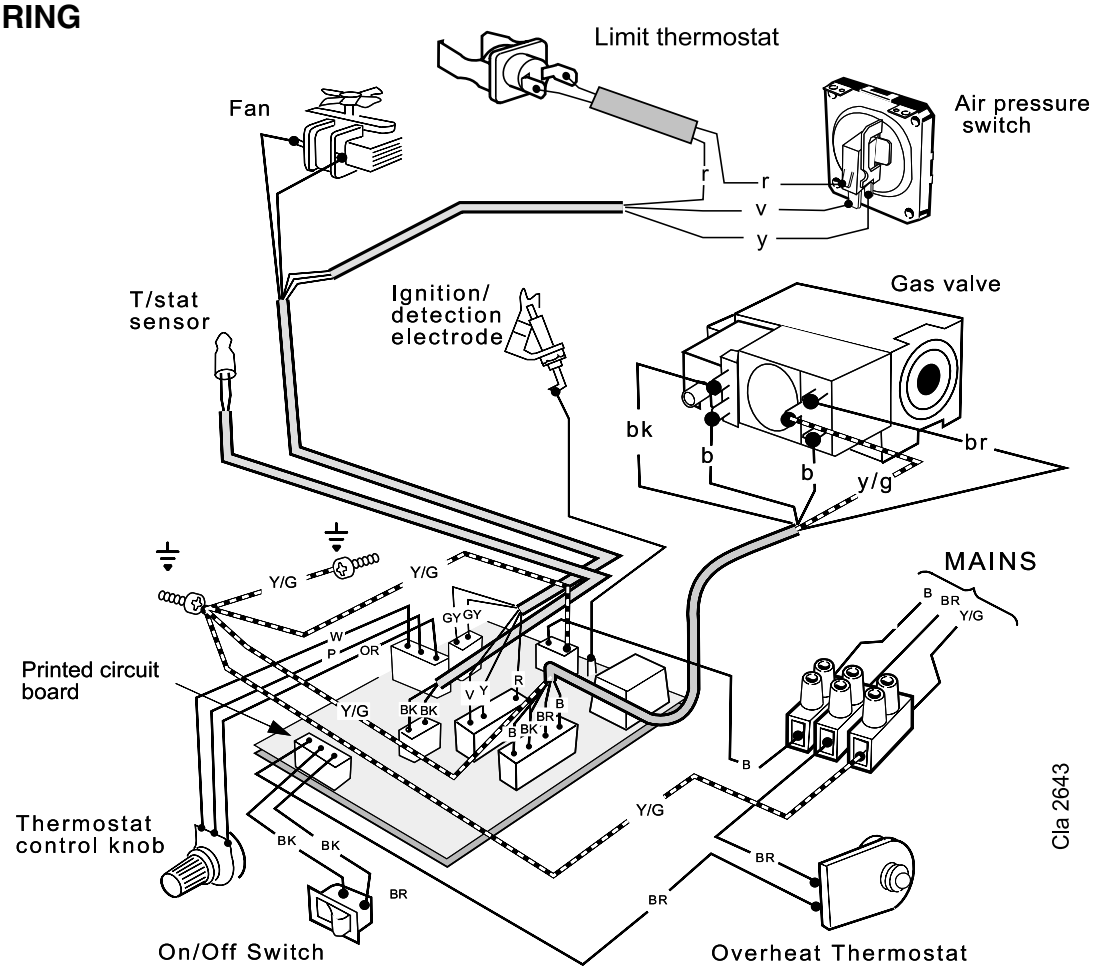

41 MID POSITION VALVE **Pumped only**

Notes.

1. *Some earth wires are omitted for clarity. Ensure proper earth continuity when wiring.*
2. *Numbering of terminals on thermostats is specific to the manufacturer.*
3. *This is a fully controlled system - set the boiler thermostat to maximum.*
4. *Switchmaster 'Midi' is similar in operation but the wiring differs slightly - see the manufacturer's literature.*

	Room Thermostat Terminals			Mid Position valve details	Cylinder Thermostat Terminals		
	1	3	2	HONEYWELL Y PLAN V4073H 1039	1	2	c
TLX 2259 or2284	3	1	4	PEGLER 'Unishare' DT 1701 etc.	1	2	3
	1	2	4	LANDIS & GYR 'LGM' SK3 - LT2701	2	3	1
	1	3	-	A. C. L. 679. H. 340.30.UO	1 bk	2 y	3 r
RTE RTM/RTC	1 3	2 1	4 N	DRAYTON Flowshare 2	2	3	1
	1	3	4	SOPAC Centra Share ZV20 - EB MID	1	2	c
	2	1	4	DANFOSS DMV - 3M	n. c.	n. o.	com.
				SWITCHMASTER			

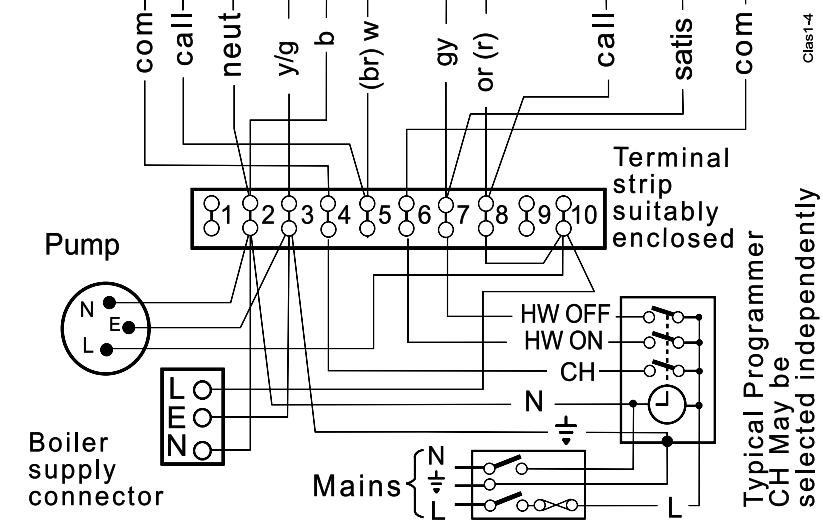

LEGEND

- **b** blue
- **bk** black
- **br** brown
- **r** red
- **y** yellow
- **w** white
- **or** orange
- **v** violet
- **p** pink
- **gy** grey
- **y/g** yellow/green

42 TWO SPRING CLOSED VALVE

Pumped only

Notes.

1. *Some earth wires are omitted for clarity. Ensure proper earth continuity when wiring.*
2. *Numbering of terminals on thermostats is specific to the manufacturer.*
3. *This is a fully controlled system - set the boiler thermostat to maximum.*
4. *Switchmaster valve has grey and orange auxiliary switch leads but the grey wire must be connected to the live supply.*

	Room Thermostat Terminals			Spring - shut valve details	Aux ★ switch wires	Cylinder Thermostat Terminals	
TLX 2259 or2284	1	3	2	HONEYWELL S PLAN V4043H 1056	gy or	1	c
	3	1	4	PEGLER system 4 SZ 1301 or 1326	gy or	1	3
	1	2	4	LANDIS & GYR SK2 - LL4453 etc.	gy or	2	1
	1	3	-	A. C. L. 679. H. 308	gy or	1 / bk	3 / r
RTE RTM/RTC	1 / 3	2 / 1	4 / N	DRAYTON ZV22 or ZV28	gy or	2	1
	1	3	4	SOPAC ZV20 - 2 EB etc.	gy bk	1	c
	2	1	4	DANFOSS DMV - 2	gy or	n. c.	com.
	1	3	-	SWITCHMASTER Auto Zone VM4	see note 4	2	1

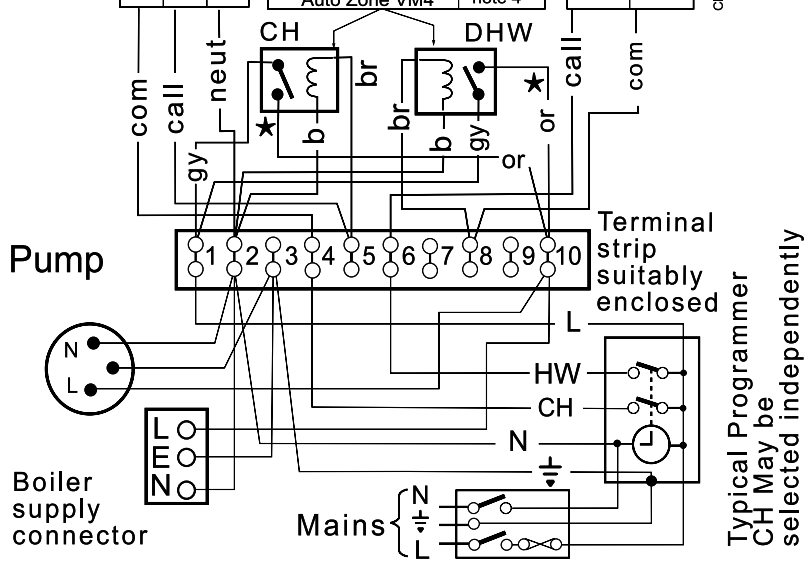

LEGEND

b	blue	**w**	white
bk	black	**gy**	grey
br	brown	**y/g**	yellow/green
r	red	**or**	orange
y	yellow	**v**	violet
		pk	pink

43 FROST PROTECTION

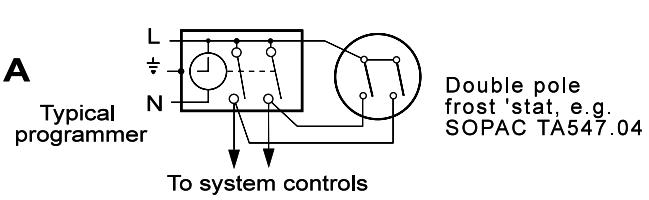

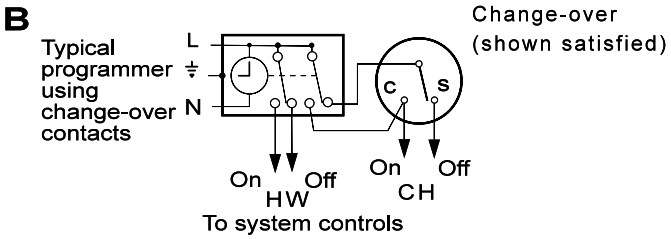

Central heating systems fitted wholly inside the house do not normally require frost protection as the house acts as a 'storage heater' and can normally be left at least 24 hrs. without frost damage. However, if parts of the pipework run outside the house or if the boiler will be left off for more than a day or so, then a frost thermostat should be wired into the system.

This is usually done at the programmer, in which case the programme selector switches are set to OFF and all other controls MUST be left in the running position.

The frost thermostat should be sited in a cold place but where it can sense heat from the system.

Wiring should be as shown, with minimal disturbance to other wiring of the programmer.

Designation of the terminals will vary but the programmer and thermostat manufacturer's leaflets will give full details.

If a boiler is installed in a garage it may be necessary to fit a pipe thermostat.

Diagram A shows a double pole frost thermostat, which should suffice for all systems which do not use the OFF terminals of the programmer.

Diagram B shows a 'change-over' frost 'stat, which will cover most systems which do use CH OFF. If, however, on such a system the HW pipework is in an isolated part of the house, a second frost 'stat may be used to protect it. If in doubt, ask your installer for advice.

44 COMMISSIONING AND TESTING

The Benchmark Log Book or equivalent self certification should be completed and signed to demonstrate compliance with Building Regulations.

A. ELECTRICAL INSTALLATION

1. Checks to ensure electrical safety should be carried out by a competent person.
2. ALWAYS carry out preliminary electrical system checks, i.e. earth continuity, polarity, resistance to earth and short circuit using a suitable test meter.

B. GAS INSTALLATION

1. The whole of the gas installation, including the meter, MUST be inspected and tested for soundness, and purged in accordance with the recommendations of BS. 6891. In IE refer to I.S.813:2002.
2. Purging air from the gas installation may be expedited by loosening the union on the gas service cock on the boiler and purging until gas is detected.
3. Retighten the union and check for gas soundness.

WARNING. Whilst effecting the required gas soundness test and purging air from the gas installation, open all windows and doors, extinguish naked lights and **DO NOT SMOKE.**

45 INITIAL LIGHTING

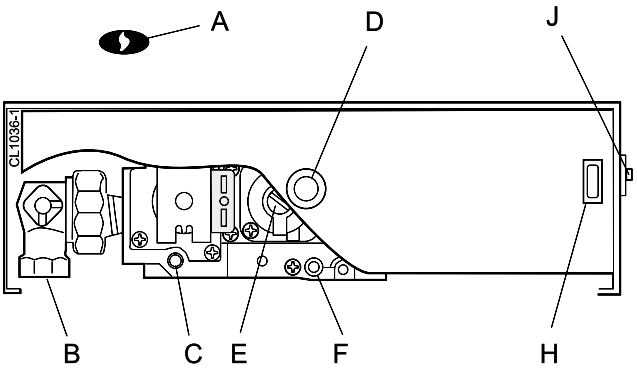

LEGEND

A Sightglass.
B Gas service cock.
C Inlet pressure test point.
D Thermostat knob
E Main burner pressure adjuster.
F Burner pressure test point.
H Boiler mains on/off switch.
J Overheat thermostat reset button.

TO LIGHT THE BOILER

1. Check that all the drain cocks are closed, and any valves in the flow and return are open.
2. Check that the gas service cock (B) is OPEN and the boiler mains On/Off switch is OFF.
3. **Fitting the Boiler Casing**

   The boiler casing must be refitted with the controls support casing attached for alignment purposes. Lift the boiler casing up to the boiler assembly, with the casing top angled forward. Hook the top edge of the boiler casing into the channel on the top of the boiler assembly. Swing the bottom of the casing down and secure with the 2 captive screws.

   The casing must seat correctly and compress the sealing strip to make an airtight joint.
   Visually check the side seals but, if side clearances are limited, then check that the top and bottom edges of the casing are correctly located.

   If the Sealed System Unit is fitted remove the unit casing in order to inspect the top casing seal.

   To gain access to the gas valve:

   a. Remove the controls support casing. Release the controls support front fixing screws 3 turns only. Remove the pod by pulling it forward to disengage from the keyhole slots.

   b. Remove the control box securing screws and swing it down into the servicing position. See diagram B.
4. Slacken the screw in the burner pressure test point (F) and connect a gas pressure gauge via a flexible tube.
5. Swing the control box back into its working position.
6. Press the overheat thermostat reset button (J).
7. Switch the electricity supply ON and check that all external controls are calling for heat.
8. Set the boiler thermostat knob (D) to position 6 and the boiler Mains On/Off switch to ON. The fan will start. After the fan has run for a few seconds the pilot solenoid valve should open and the intermittent spark commence, continuing until the pilot is established. The main burner will then cross-light smoothly. If this sequence does not occur, refer to the Fault Finding section.
9. Test for gas soundness around ALL boiler gas components using leak detection fluid.
10. Operate the for 10 minutes to stabilise the burner temperature.
11. The boiler is pre-set at the factory to its nominal rating. If the burner pressure measured is incorrect it may be reset using the following procedure. Refer to Table 2 (page 3):

    a. Set the mains On/Off switch to OFF.

    b. Switch the electricity supply OFF.

    c. Swing the control box down into the servicing position.

    d. Remove the main burner adjuster cover.

    e. Turn the adjusting screw *clockwise* to INCREASE the pressure, or *anticlockwise* to DECREASE the pressure.

    f. Swing the control box back into its working position.

    g. Switch the electricity supply ON.

    h. Set the mains On/Off switch to ON and check the new setting pressure.
12. If necessary repeat steps 12a to h until the required pressure is achieved. Record this value in the Benchmark log book.
13. Set the main On/Off switch to OFF.
14. Switch the electricity supply OFF.
15. Swing the control box down into the servicing position.
16. Refit the main burner pressure adjuster cover.
17. Remove the pressure gauge and tube. Retighten the sealing screw in the pressure test point. Ensure a gas tight seal is made.

46 INITIAL LIGHTING - continued

18. Swing the control box back into its working position and secure.

19. Remove the boiler casing.

20. Refit the controls pod to the boiler casing and tighten the 2 front fixing screws.

21. Refit the complete casing to the boiler.

22. Close the pod door.

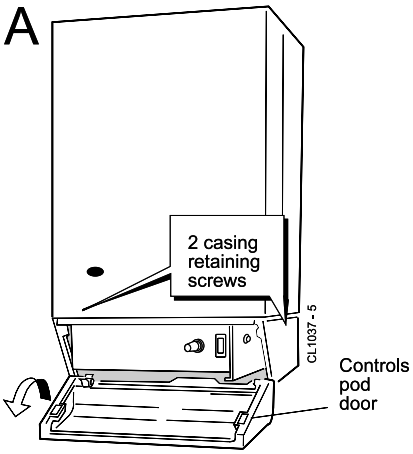

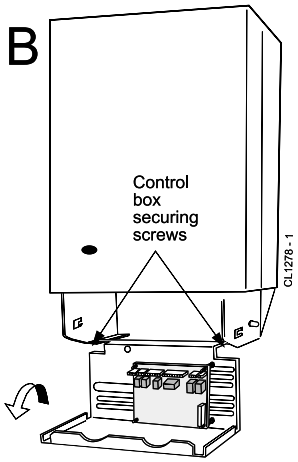

47 GENERAL CHECKS

Make the following checks for correct operation:

1. Set the boiler thermostat knob to position 6 and operate the mains on/off switch. Check that the main burner lights and extinguishes in response.
2. The correct operation of ANY programmer and all other system controls should be proved.

   Operate each control separately and check that the main burner or circulating pump, as the case may be, responds.
3. Check that the casing is sealed correctly and compressing the sealing strip all around the casing.
4. **Water Circulating System**
   - **a.** With the system HOT, examine all water connections for soundness.
   - **b.** With the system still hot, turn off the gas, water and electricity supplies to the boiler and drain down, in order to complete the flushing process.
   - **c.** Refill and vent the system, clear all air locks and again check for water soundness.
   - **d.** Balance the system.
5. Finally, set the controls to the user's requirements.

The temperatures quoted below are approximate and vary between installations.

Knob Setting	Flow Temperature °C	°F
1	54	130
2	60	140
3	66	150
4	71	160
5	77	170
6	82	180

WARNING.

The boiler MUST NOT be operated with the casing removed.

48 HANDING OVER

After completing the installation and commissioning of the system the installer should hand over to the householder by the following actions:

1. Hand the User's Instructions to the Householder and explain his or her responsibilities under the current Gas Safety (Installation and Use) Regulations or rules in force.
2. Draw attention to the Lighting Instruction label affixed to the controls pod door.
3. Explain and demonstrate the lighting and shutting down procedures.
4. The operation of the boiler and the use and adjustment of ALL system controls should be fully explained to the Householder, to ensure the greatest possible fuel economy, consistent with household requirements of both heating and hot water consumption.
   Advise the User of the precautions necessary to prevent damage to the system and to the building, in the event of the system remaining inoperative during frosty conditions.
5. Explain the function and the use of the boiler thermostat and external controls.
6. Explain the function of the boiler overheat thermostat and emphasise that if cutout persists, the boiler should be turned off and a registered CORGI installer consulted. In IE contact a Competent Person.
7. Explain and demonstrate the function of time and temperature controls, radiator valves etc., for the economic use of the system.
8. If any programmer is fitted draw attention to the Programmer User's Instructions and hand them to the Householder.
9. **After installation, commissioning and customer hand-over please complete the benchmark appliance log book and leave this with the customer. For IE, it is necessary to complete a "Declaration of Conformity" to indicate compliance to I.S. 813:2002.**
10. Stress the importance of regular servicing by a CORGI registered installer and that a comprehensive service should be carried out AT LEAST ONCE A YEAR. In IE servicing work must be carried out by a Competent Person.
11. As the installer you may wish to undertake the service contract yourself or alternatively offer to the customer the benefits of the Caradon Ideal Services scheme, details of which are outlined in the household pack supplied with this boiler.

49 SCHEDULE

To ensure the continued safe and efficient operation of the appliance, it is recommended that it is checked at regular intervals and serviced as necessary.
The frequency of servicing will depend upon the installation condition and usage, but should be carried out at least annually. It is the law that any service work must be carried out by CORGI registered installer. In IE service work must be carried out by a Competent Person.

a. Light the boiler and carry out a pre-service check, noting any operational faults. Operate the boiler for at least 20 minutes. Check the gas consumption.

b. Connect a suitable gas analyser to the sampling point on the top RHS of the back panel. For correct boiler operation the CO/CO_2 content of the flue gas should not be greater than 0.004 ratio. If this is the case and the gas input is at least 90% of the nominal, then no further action need be taken. If not, proceed to paragraph **c**.

c. Clean the main burner. Refer to Frame 51.

d. Clean the heat exchanger. Refer to Frame 52.

e. Clean the main and pilot injectors. Refer to Frame 53.

f. Remove any debris from inside the base of the casing.

g. Check that the flue terminal is unobstructed and that the flue system is sealed correctly.

h. If the appliance has been installed in a compartment, check that the ventilation areas are clear.

The servicing procedures are covered more fully in Frames 50 to 54 and must be carried out in sequence.

WARNING.
Disconnect the electrical supply and turn off gas supply.

IMPORTANT. After completing the servicing or exchange of components always test for gas soundness and carry out functional checks as appropriate.

When work is complete the casing MUST be correctly refitted, ensuring that a good seal is made.

The boiler must NOT be operated if the casing is not fitted.

Note. *In order to carry out either servicing or replacement of components, the boiler casing must be removed. Refer to Frame 50.*

50 BOILER CASING REMOVAL

1. Open the controls pod door and release the 2 captive screws at the bottom of the casing. Swing the bottom of the boiler casing out until the controls pod casing has cleared the controls, then unhook the casing top from the pack panel. Retain the casing in a safe place. Where the removal of the casing is impaired by a pelmet, the instruction in Frame 2 should be followed.

2. Isolate the gas supply at the service cock fitted to the boiler.

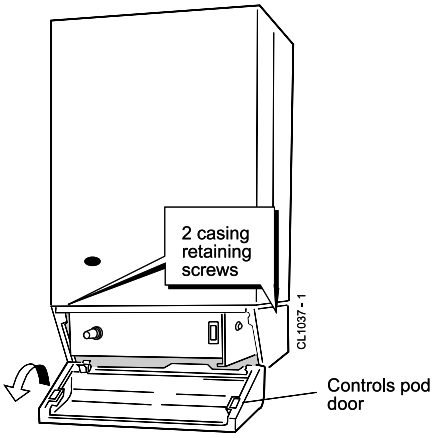

51 BURNER AND AIR BOX REMOVAL

1. Remove the screw retaining the front burner support strap to the combustion chamber. Remove the M5 pozi situated at the LH bottom rear of the burner and pull the burner downwards to disengage the retention tab. Remove the burner to a safe place for inspection and cleaning.

2. Remove the control box fixing screw. Pull the box forward and downward to disengage.

3. Pull the HT lead connection off the printed circuit board and pull the lead upwards through the bottom panel grommet.

4. Remove the 4 screws retaining the air box/pilot assembly to the vertical manifold and carefully remove the assembly.

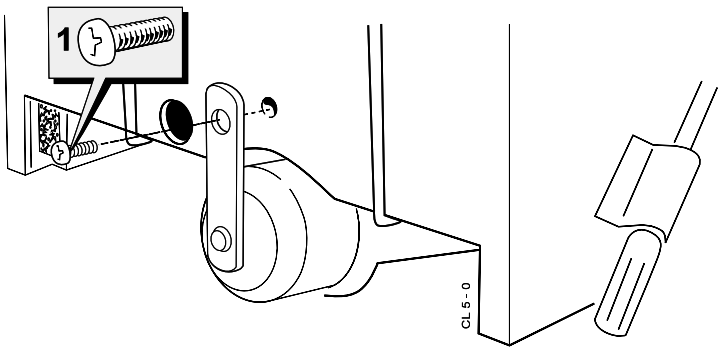

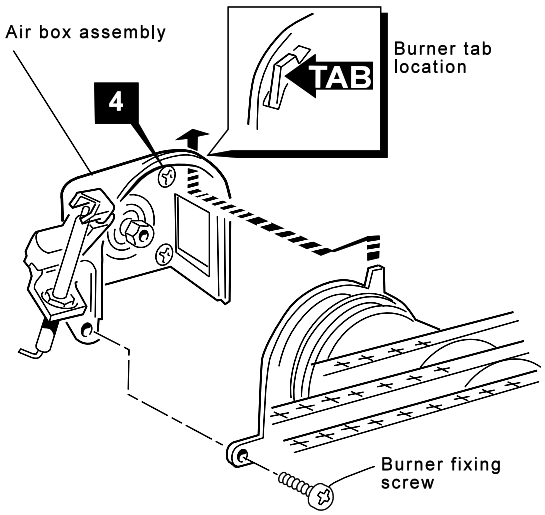

52 CLEANING THE FAN ASSEMBLY / THE FLUEWAYS

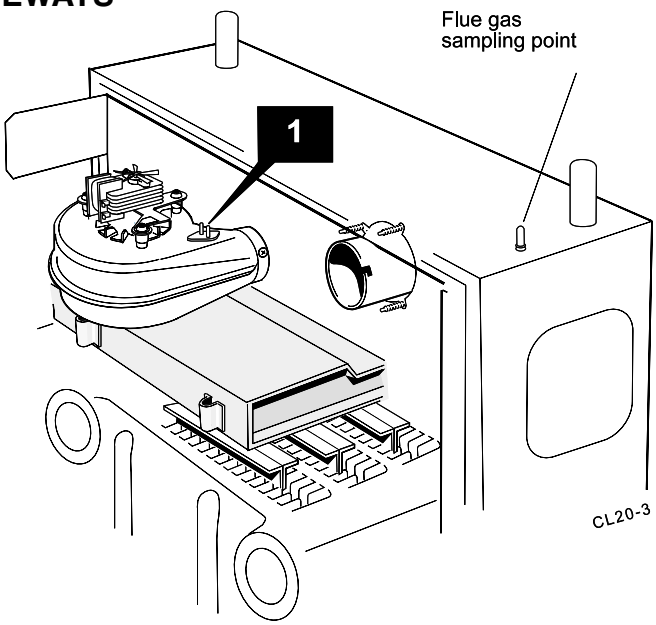

1. Remove the 2 silicon rubber tubes from the fan sensing points.
2. Disconnect the fan leads.

3a. Rear flue
Slacken the M4 screw securing the flue connector to the fan. Disconnect the connector from the fan and slide into the flue.

3b. Side flue
Slacken off two M4 screws securing the flue elbow and flue connector. Disconnect the flue connector from the elbow and slide into the flue. Remove the flue elbow.

4. Disconnect the silicon rubber tube from the rear of the collector hood.
5. Slacken the two M5 nuts on the front tie rods, releasing the tie rods from the combustion chamber.
6. Remove the M5 central fixing screw at the rear of the collector hood and remove collector hood/fan assembly.
7. Check that the fan impeller runs freely. Remove any debris from the impeller with a soft brush.
8. Remove the flue baffles.
9. Remove all loose deposits from the heat exchanger, particularly between the fins, using a suitable brush.
10. Reassemble in reverse order, ensuring the fan leads and 3 sensing tubes are reconnected.

53 CLEANING THE BURNER AND PILOT ASSEMBLY

1. Brush off any deposits that may have fallen on to the burner head (ensuring the flame ports are unobstructed) and remove any debris that may have collected.
   Note. *Brushes with metallic bristles must not be used.*
2. Remove the main burner injector and ensure there is no blockage or damage. Clean or renew as necessary.
3. Refit the injector, using an approved jointing compound sparingly.
4. Inspect the pilot burner and ignition / detection electrode. Ensure that they are clean and in good condition.

Check that:

a. The pilot burner injector is not blocked or damaged. Refer to Frame 60 for removal details.

b. The pilot burner is clean and unobstructed.

c. The ignition / detection electrode is clean and undamaged.

d. The ignition / detection lead is in good condition.

e. The spark gap is correct (refer to Frame 60). Clean or renew as necessary.

Note. *The pilot shield is located around the pilot assembly bracket and is located by the electrode retaining nut.*

54 REASSEMBLY

Reassemble the boiler in the following order.

1. Refit the flue baffles.
2. Inspect the collector hood rope gasket and replace, if necessary, ensuring that the self adhesive rope is fitted centrally on to the lip of the collector hood / fan assembly. The boiler efficiency will be adversely affected if incorrectly fitted. Refit the collector hood and retain with the 2 front tie rods and the rear central fixing screw. Tighten the nuts and screw. Ensure that the sealing gasket is compressed. Refit the pressure pipe.
3. Refit the positive pressure tubes on the top of the fan housing. Reconnect the electrical leads.
4. Refit the air box assembly and burner. Ensure that the burner front fixing is refitted.
5. Reconnect the gas supply and the electrical wiring. Refer to Frames 36 & 38.
6. Check the sightglass in the boiler casing. Clean or renew as necessary. Refer to Frame 57.
7. Check for gas soundness. Check the gas service cock and pressure test point.
8. Refit the boiler casing (Refer to Frame 46, item 20). Note that it is not necessary to disturb the controls casing pod.
9. Close the controls pod door.

55 GAS PRESSURE ADJUSTMENT

PILOT

The pilot is factory set to maximum and no further adjustment is possible. If, after removing and checking the injector (as detailed in Frame 60) and ensuring that there is an inlet pressure of 20 mbar available, the pilot does not light then contact **Caradon Ideal Limited.**

Relight in accordance with 'Initial Lighting', Frame 45.

MAIN BURNER

After any servicing, reference should be made to Table 2, which quotes details of the rated output with the related burner setting pressure and the heat input. Any required adjustments should be made by using the pressure adjustment screw.

Refer to 'initial Lighting', Frame 45.

REPLACEMENT OF PARTS

56 GENERAL

When replacing any component:

1. Isolate the electricity supply.
2. Turn OFF the gas supply.
3. Remove the boiler casing. Refer to Frame 50.

IMPORTANT. When work is complete the casing must be correctly refitted, ensuring that a good seal is made.

Note. *In order to assist fault finding, the control box printed circuit board is fitted with 2 indicator lights which represent the following boiler conditions:*

Neon I3. Mains electricity ON.

Neon SG1. Flashes to indicate ignition operation (stops after detection).

The boiler MUST NOT be operated if the casing is not fitted.

57 SIGHTGLASS REPLACEMENT

1. Refer to Frame 56.
2. Unfasten the 2 nuts and washers holding the sightglass assembly to the casing front panel.
3. When fixing the new assembly ensure that the parts are in the correct order. The frame must have the return edge at the bottom.
4. Retighten the 2 nuts to ensure an airtight seal. Do NOT overtighten.
6. Replace the boiler casing. Refer to Frame 54.

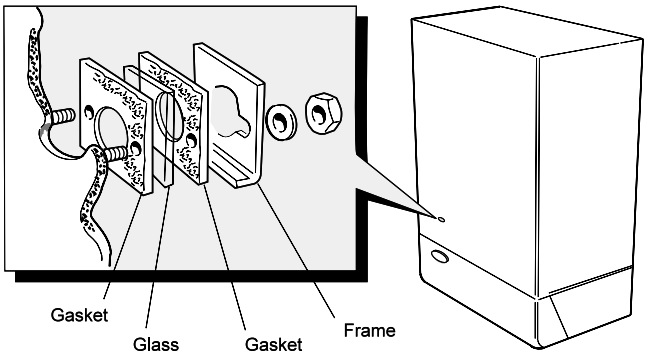

58 OVERHEAT THERMOSTAT REPLACEMENT

1. Refer to Frame 56.
2. Remove the control box fixing screws.
3. Swing the control box down into the servicing position.
4. Pull off the electrical connections at the thermostat. Remove the backnut retaining the thermostat to the bracket. Withdraw the thermostat phial from the heat exchanger pocket.
5. Fit the new thermostat and reassemble in reverse order.
6. Check the operation of the boiler.

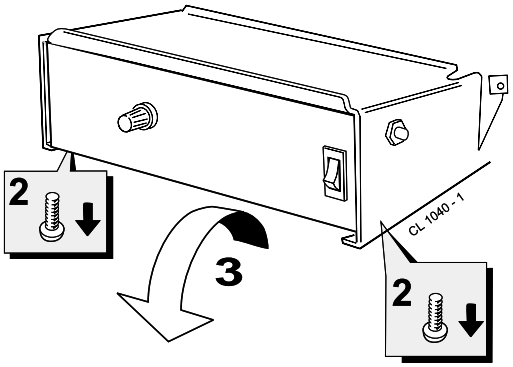

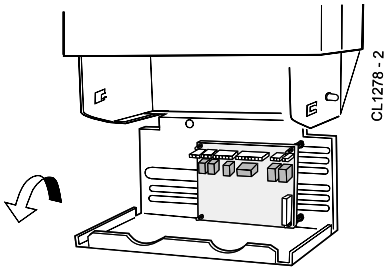

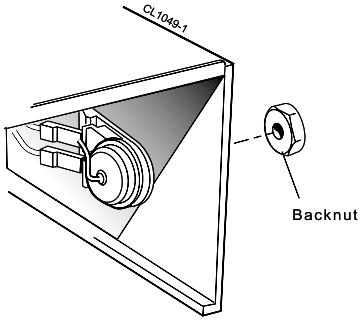

59 THERMOSTAT CONTROL, THERMISTOR SENSOR LEAD & ON/OFF SWITCH REPLACEMENT

Refer also to Frame 56.

A. Remove the fixing screws

B. Swing the control box down into the servicing position.

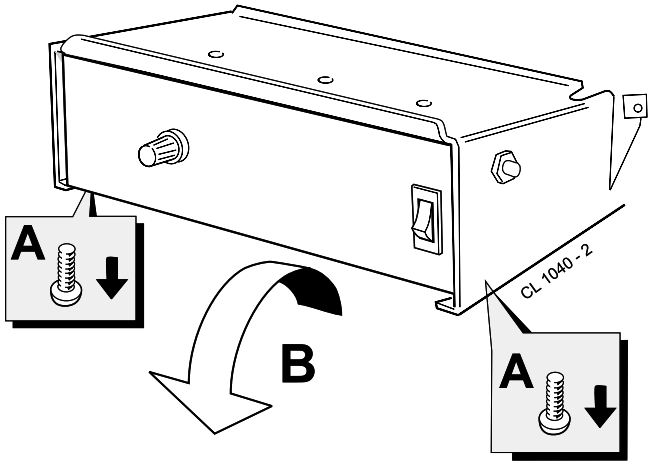

Thermostat control

1. Pull the knob off the shaft.
2. Remove the backnut securing the thermostat control to the control box.
3. Pull off the Molex connector from the printed circuit board.
4. Replace and reassemble in reverse order.

Thermistor sensor lead

5. Pull the sensor lead connector off the printed circuit board and cut the cable strap securing the thermistor harness to the bottom panel of the control box (if fitted) and remove the strap.
6. Remove the sensor from the heat exchanger pocket and unclip from the back panel.
7. Remove the strain relief bush from the back panel base.
8. Remove the sensor lead through the grommet in the control box.
9. Replace and reassemble in reverse order, ensuring the new cable strap is fitted and securing the thermistor harness.

On/off switch

10. Disconnect the electrical connectors from the rear of the switch.
11. Press in the 2 side retaining clips and remove the switch.
12. Reassemble in reverse order.

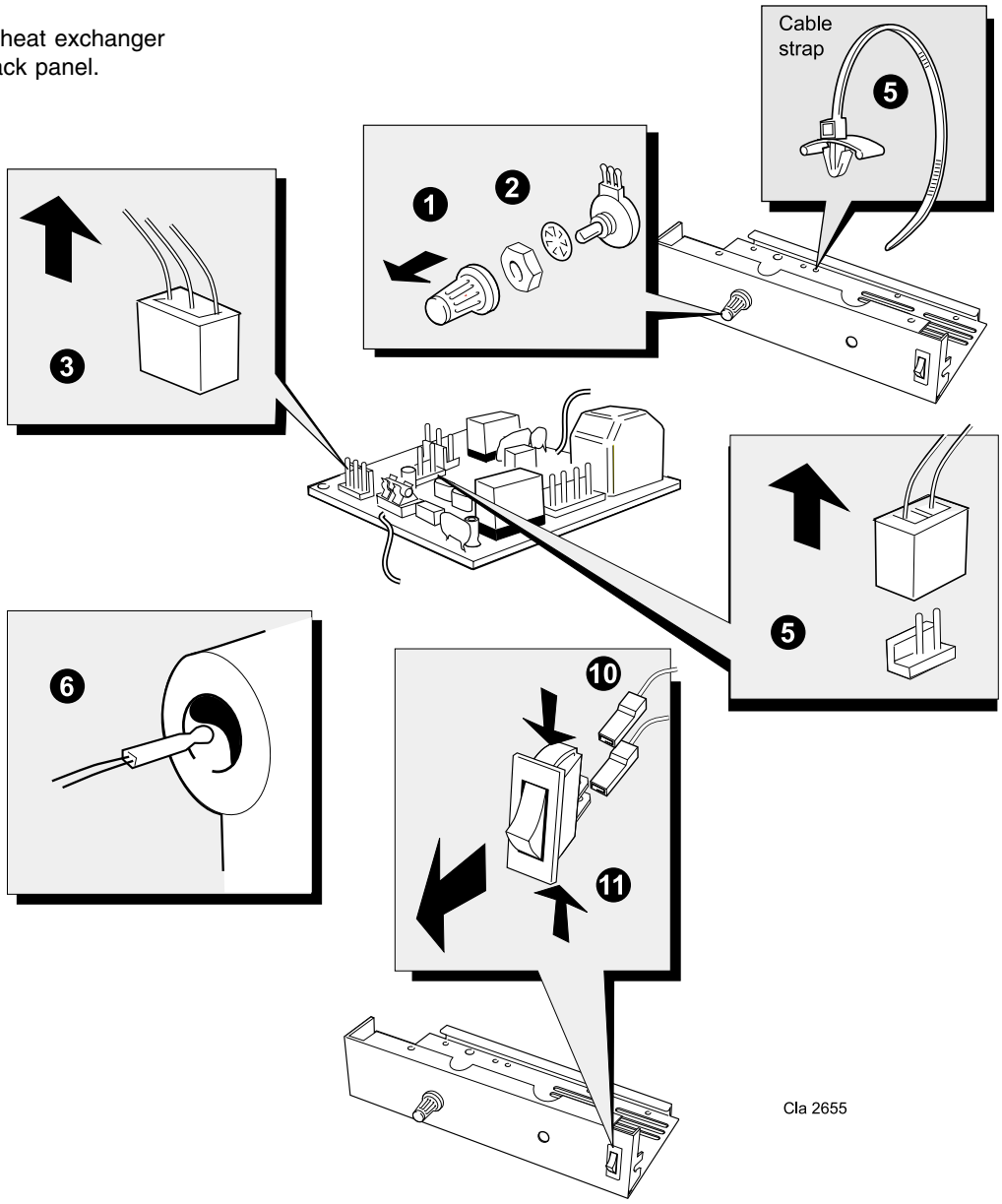

60 LIMIT THERMOSTAT REPLACEMENT

1. Refer to Frame 56.
2. Remove the limit thermostat assembly from the boiler flow pipe.
3. Disconnect the electrical connectors
4. Replace and reassemble in reverse order, taking care to correctly position the limit thermostat as shown in the orientation diagram opposite.

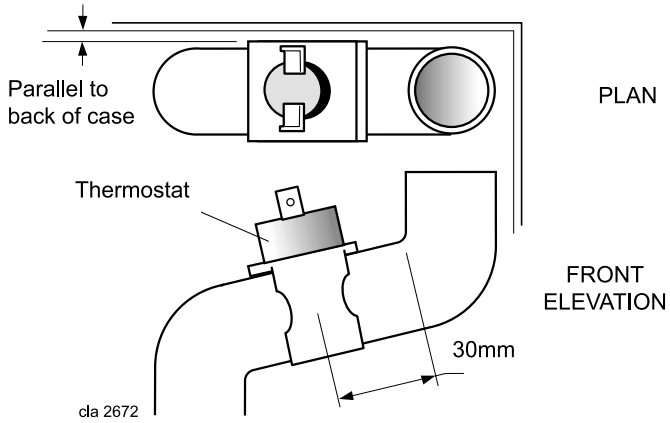

Thermostat Orientation

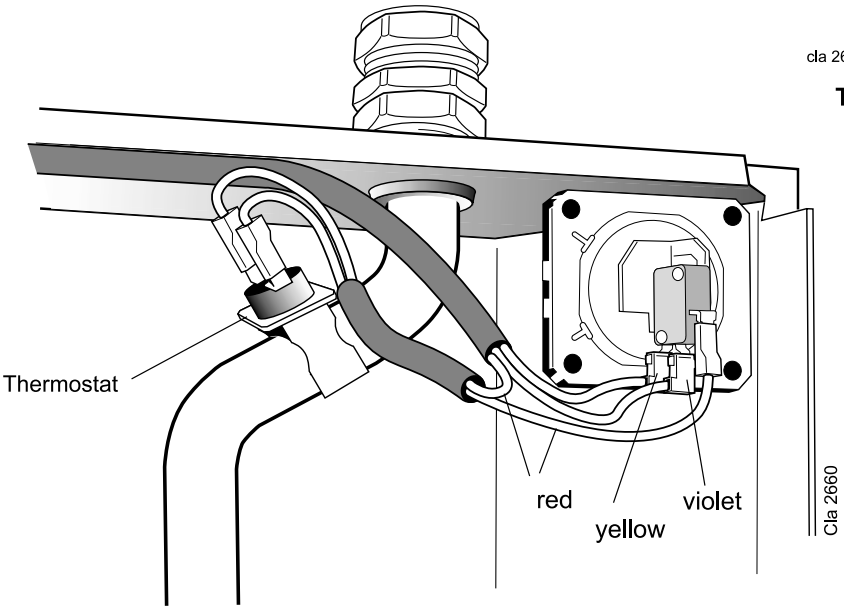

61 PILOT BURNER REPLACEMENT

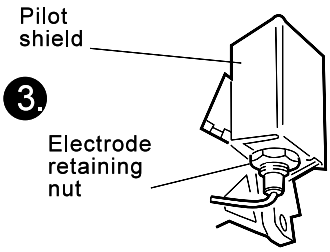

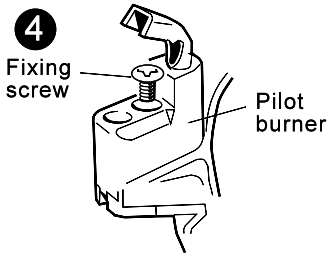

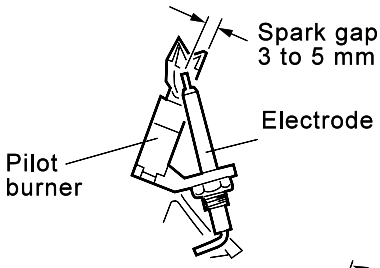

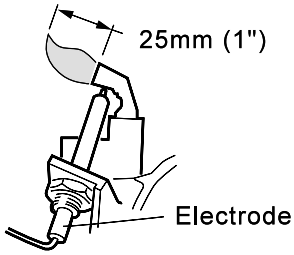

1. Refer to Frame 56.
2. Remove the burner and air box assembly. Refer to Frame 51.
3. Remove the electrode retaining nut and remove the pilot shield and electrode.
4. Unscrew the central pilot fixing screw and lift the pilot clear of the pilot injector. The pilot injector may now be unscrewed if required.
5. Replace the pilot burner (injector if necessary) and retain with the M4 screw previously removed. Ensure the copper sealing washer is replaced when refitting the pilot injector.
6. Replace the electrode and pilot shield, retaining both with the electrode nut. Check the spark gap.
7. Reassemble in reverse order.
8. Check the operation of the boiler.
9. The pilot is factory set to maximum and no further adjustment is possible. Ensure there is an inlet pressure of 20 mbar available. Also check burner ignition and cross-lighting.

62 IGNITION ELECTRODE AND LEAD REPLACEMENT

1. Refer to Frame 56.
2. Remove the burner and air box assembly. Refer to Frame 51.
3. Remove the electrode retaining nut.
4. Remove the pilot shield.
5. Remove the ignition electrode and integral lead.
6. Refit the new electrode and lead in reverse order. Ensure that the pilot shield is replaced.
7. Check the spark gap. Refer to Frame 61.
8. Reassemble in reverse order.
9. Check the operation of the boiler.

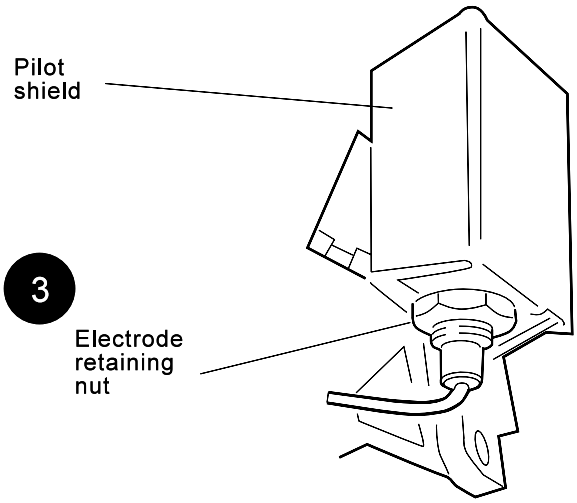

63 MAIN BURNER AND MAIN BURNER INJECTOR REPLACEMENT

1. Refer to Frame 56.
2. Remove the screw retaining the front burner support strap to the combustion chamber.
3. Remove the M5 pozi screw, situated at the left hand bottom rear of the burner. Pull the burner downward to disengage the retention tab and remove the burner.
4. At this stage the main burner injector can be removed, checked, cleaned or replaced as required. Ensure that a new copper sealing washer is used.
5. Fit the new burner, ensuring that the retention tab is correctly located in the air box slot and reassemble in reverse order.
6. Check the burner for cross-lighting and flame stability.

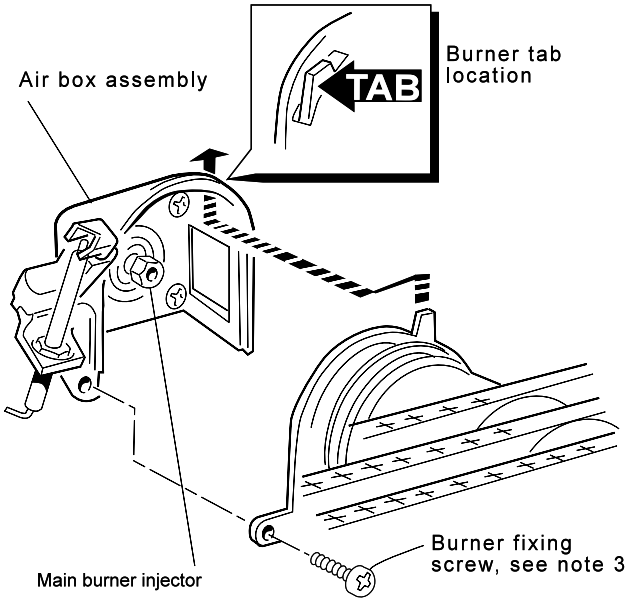

64 GAS CONTROL VALVE REPLACEMENT

Note. *Refer also to Frame 74 of 'Exploded Views' for illustration of the procedure detailed below.*

1. Refer to Frame 56.
2. Remove the burner and air box assembly. Refer to Frame 51.
3. Remove the fixing screws.
   Swing the control box down into the servicing position.
4. Disconnect the gas control valve electrical leads.
5. Undo the gas cock union .
6. Whilst supporting the gas control valve, remove the 2 screws retaining the manifold to the back panel.
7. Remove the gas control / manifold assembly.
8. Remove the 4 screws retaining the manifold to the gas control valve, and fit the manifold to the new valve. Ensure that the new control is fitted the correct way round (an arrow engraved on back indicates the direction of flow).
9. Transfer the gas cock union to the new gas control valve, using an approved jointing compound.
10. Reassemble in reverse order.
11. Check the operation of the boiler.

65 FAN REPLACEMENT

1. Refer to Frame 56.
2. Remove the 2 silicon rubber tubes from the fan sensing points.
3. Disconnect the fan leads.

4a. **Rear flue.** Slacken the M4 screw securing the flue connector to the fan. Disconnect the connector from the fan and slide into the flue.

4b. **Side flue.** Slacken off two M4 screws securing the flue elbow and flue connector. Disconnect the flue connector from the elbow and slide into the flue. Remove the flue elbow.

5. Disconnect the silicon rubber tube from the rear of the collector hood.
6. Slacken the two M5 nuts on the front tie rods, releasing the tie rods from the combustion chamber.
7. Remove the M5 central fixing screw at the rear of the collector hood and remove collector hood / fan assembly.
8. Remove the three M4 screws retaining the fan to the collector hood.
9. Fit the new fan and reassemble in reverse order, ensuring the fan leads, and 3 sensing tubes are reconnected.
10. Check the operation of the boiler.

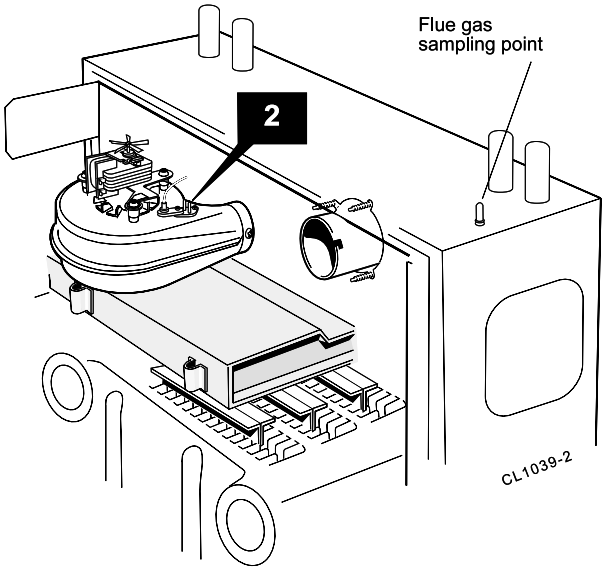

66 AIR PRESSURE SWITCH (APS) REPLACEMENT

1. Refer to Frame 56.
2. Remove the APS fixing screw.
3. Remove both sensing tubes from the APS.
4. Remove the 3 electrical connections from the APS.
5. Fit the new APS and reassemble in reverse order.
6. Check the operation of the boiler.

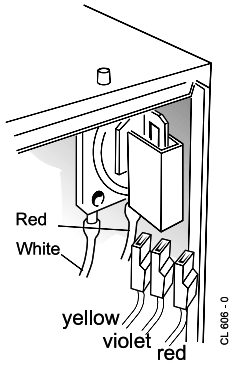

67 PRINTED CIRCUIT BOARD (PCB) REPLACEMENT

Note. *Refer to Frame 73 of 'Exploded Views' for illustration of the procedure detailed below.*

1. Refer to Frame 56.
2. Remove the fixing screws and swing the control box down into the servicing position.
3. Disconnect the detection lead from the PCB.
4. Unplug all the Molex connectors from the PCB.
5. Disengage the PCB from the mounting posts and withdraw from the control box.
6. Fit the new PCB and reassemble in reverse order.
7. Check the operation of the boiler.

Fuse.

To change the fuse, prise it out of the holder and disengage the fuse. Refer to Frame 73 for fuse location.

68 COMBUSTION CHAMBER INSULATION REPLACEMENT

1. Refer to Frame 56.
2. Remove the burner and air box assembly. Refer to Frame 51.
3. Remove the 4 tie rods.
4. Remove the combustion chamber.
5. Remove the 2 side panel retaining brackets.
6. Remove the side insulation panels.
7. Remove the front and rear insulation panels.
8. Fit the new front and rear insulation panels.
9. Fit the new side panels and retain with the brackets and screws previously removed.
10. Reassemble in reverse order.

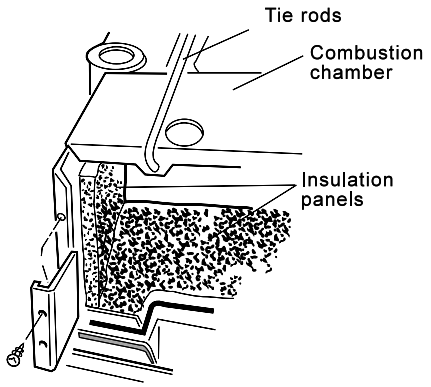

69 HEAT EXCHANGER REPLACEMENT

Note. *Refer to Frame 7 (Boiler assembly - Exploded view) for illustration of the procedure detailed below.*

1. Refer to Frame 56.
2. Remove the burner / air box assembly. Refer to Frame 51.
3. Drain the system.
4. Disconnect the water connections. If compression fittings are used then cut the pipes both above and below the fittings in order to allow the heat exchanger assembly to be removed. Remove the heat exchanger drain plug and drain the residual water into a suitable receptacle.
5. Remove the fan / collector hood assembly. Refer to Frame 52.
6. Remove the combustion chamber by unscrewing the 4 tie rods.
7. Remove the thermostat sensors from the pockets on the heat exchanger by removing the M3 screws and plates.
8. Slacken 3 turns only the 4 heat exchanger / inter-panel retaining screws.
9. Lift the heat exchanger / inter-panel assembly upward and forward to disengage key hole fixings. Pull the assembly downwards to clear the water pipes from the back panel.
10. Remove the 2 rubber sealing grommets from the top of the back panel to facilitate fitting the new assembly.
11. Fit the new heat exchanger assembly, complete with water pipes, and hang it on the key hole slots and screws. Retighten the screws.
12. Replace the 2 rubber sealing grommets.
13. Reassemble in reverse order.
14. Remake all water connections, ensuring that the compression fittings (if used) are correctly refitted.
15. Fully test all functions, including water and gas soundness.

70 CASING SEAL REPLACEMENT

1. Refer to Frame 56.
2. Remove the old seal from the casing surround and thoroughly clean the casing surfaces.
3. Fit the new self adhesive seals.
4. Replace the boiler casing.

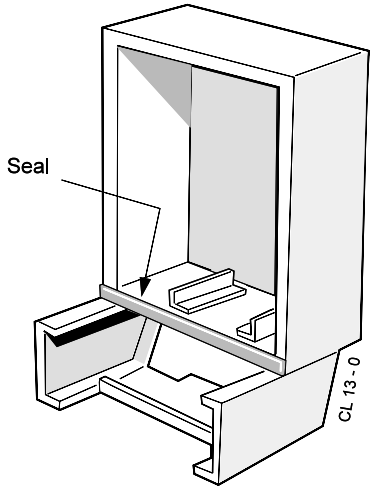

FAULT FINDING

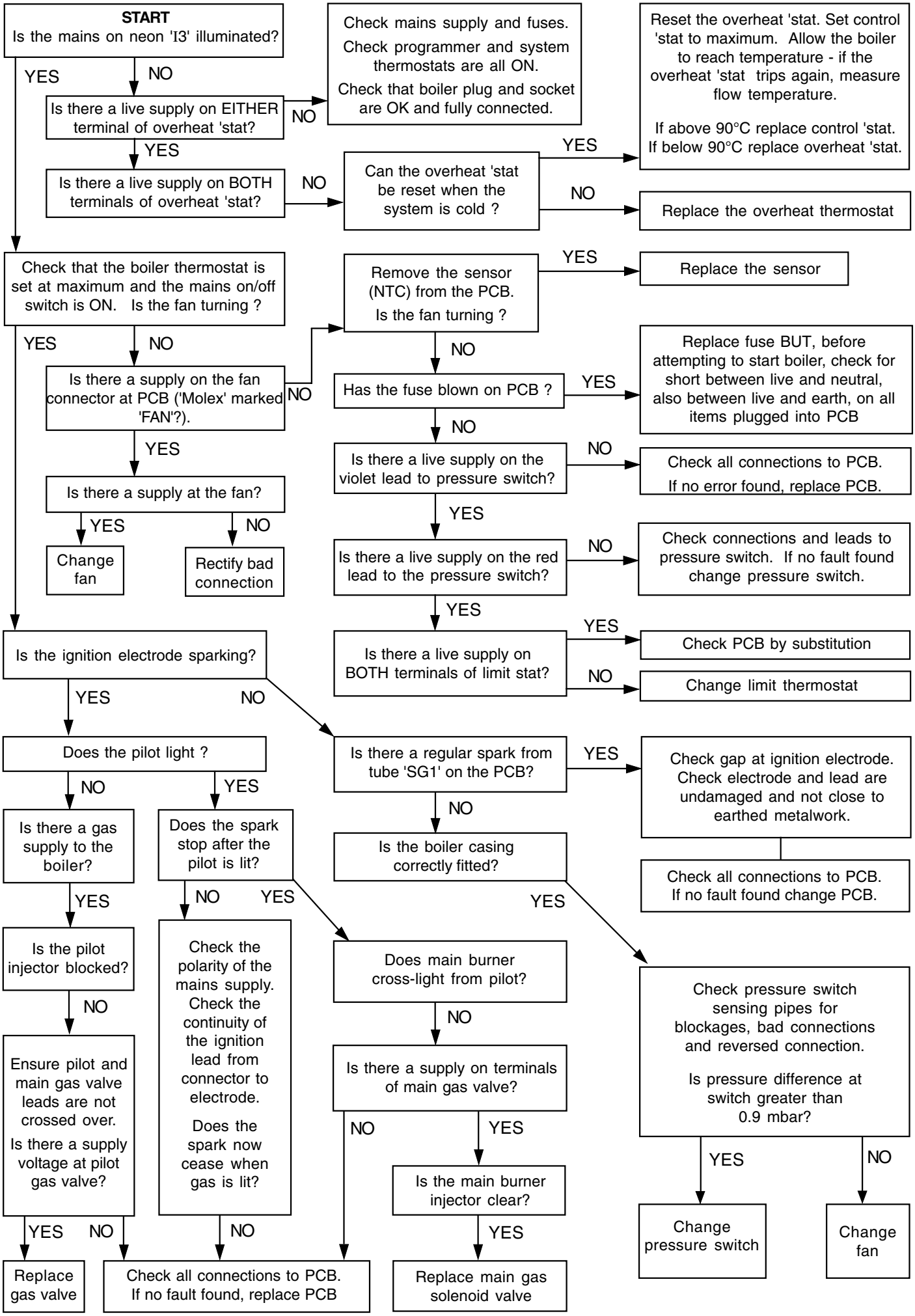

SHORT LIST OF PARTS

The following are parts commonly required due to damage or expendability. Their failure or absence is likely to affect safety or performance of this appliance.

The list is extracted from the British Gas List of Parts, which contains all available spare parts.

The full list is held by British Gas, **Caradon Ideal Limited** distributors and merchants.

When ordering spares please quote:

1. Boiler Model
2. Appliance G.C. Number
3. Description
4. Quantity
5. Product Number

When replacing any part on this appliance use only spare parts that you can be assured conform to the safety and performance specification that we require. Do not use reconditioned or copy parts that have not been clearly authorised by **Ideal Boilers.**

Key No.	GC Part No.	Description		Qty.	Product No.
9	308 365	Sightglass assembly kit		1	171 414
12		Main burner			
			FF 330 & FF 340	1	171 012
			FF 350 & FF 360	1	171 013
13		Main burner injector			
		Injector	FF 330	1	171 424
		Injector	FF 340	1	171 425
		Injector	FF 350		171 426
		Injector	FF 360	1	171 427
14	397 943	Pilot burner injector	FF 330-360	1	171 434
15	308 358	Pilot burner head	FF 330-360	1	171 438
17	E25-841	Gas valve kit		1	171 441
18	308 317	Ignition electrode complete with lead and backnut 410 mm lg.		1	171 442
19		Control box assembly, including PCB		1	171 894
23		Automatic ignition printed circuit board:		1	171 450
24		Pressure switch		1	171 454
26	308 283	Thermostat knob			1 171 929
30	E72-557	Fan assembly			171 463
35		Boiler casing assembly complete with sightglass assy, insulation & M5 x 16 dogpoint pozi pan hd	FF 330-360	1	171 949
37		Controls casing door with Lighting Instructions		1	171 475
39		Casing seal pack complete with screws		1	171 479
45	386 144	Overheat thermostat		1	171 950
59		Limit thermostat		1	173 353

71 SHORT PARTS LIST

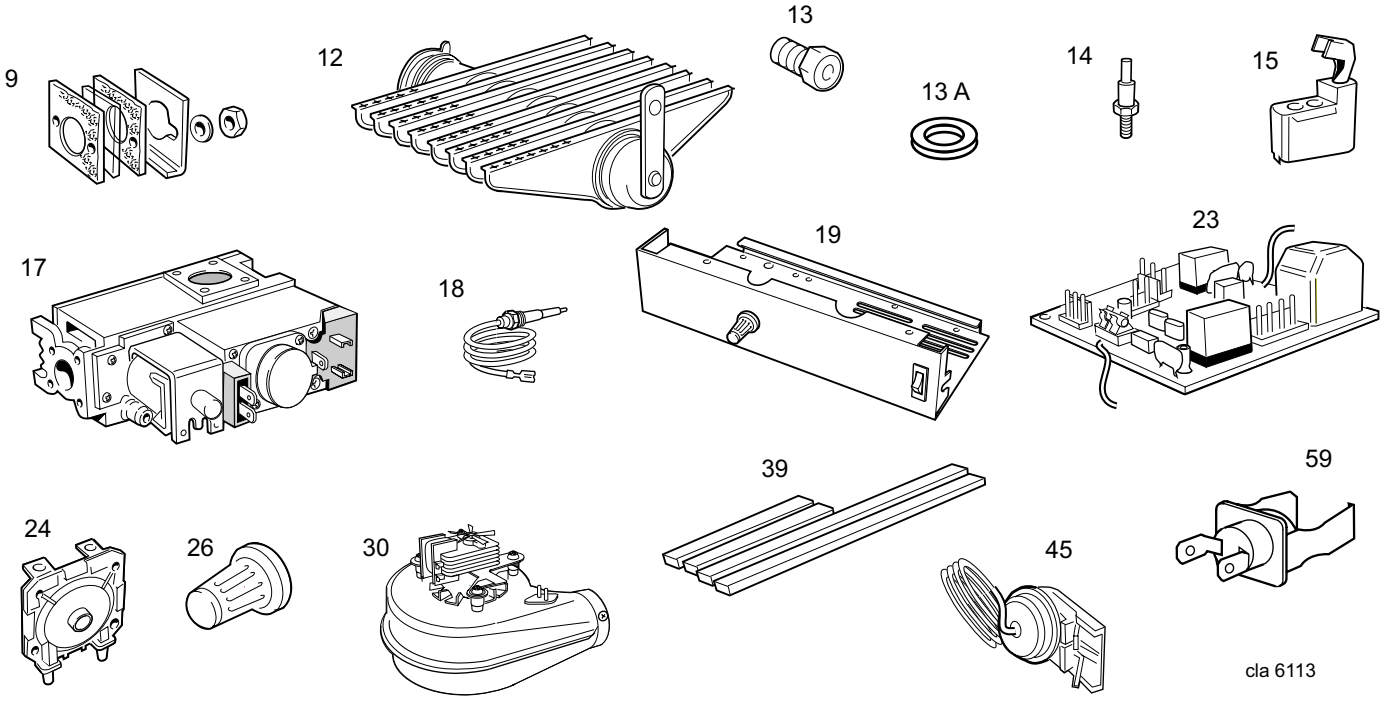

72 BOILER CASING ASSEMBLY

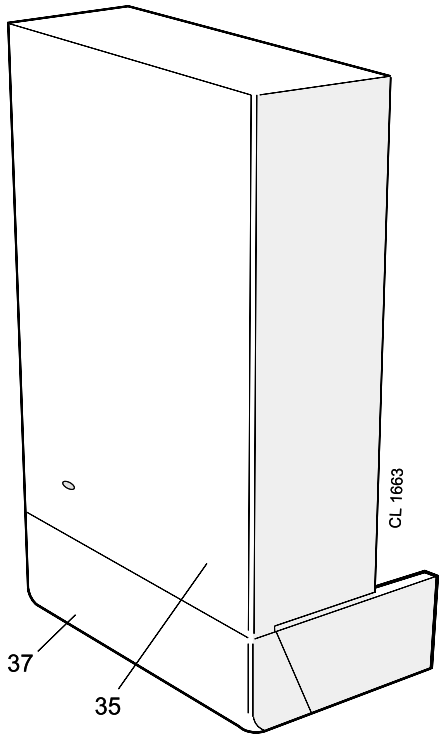

73 CONTROL BOX - Exploded View

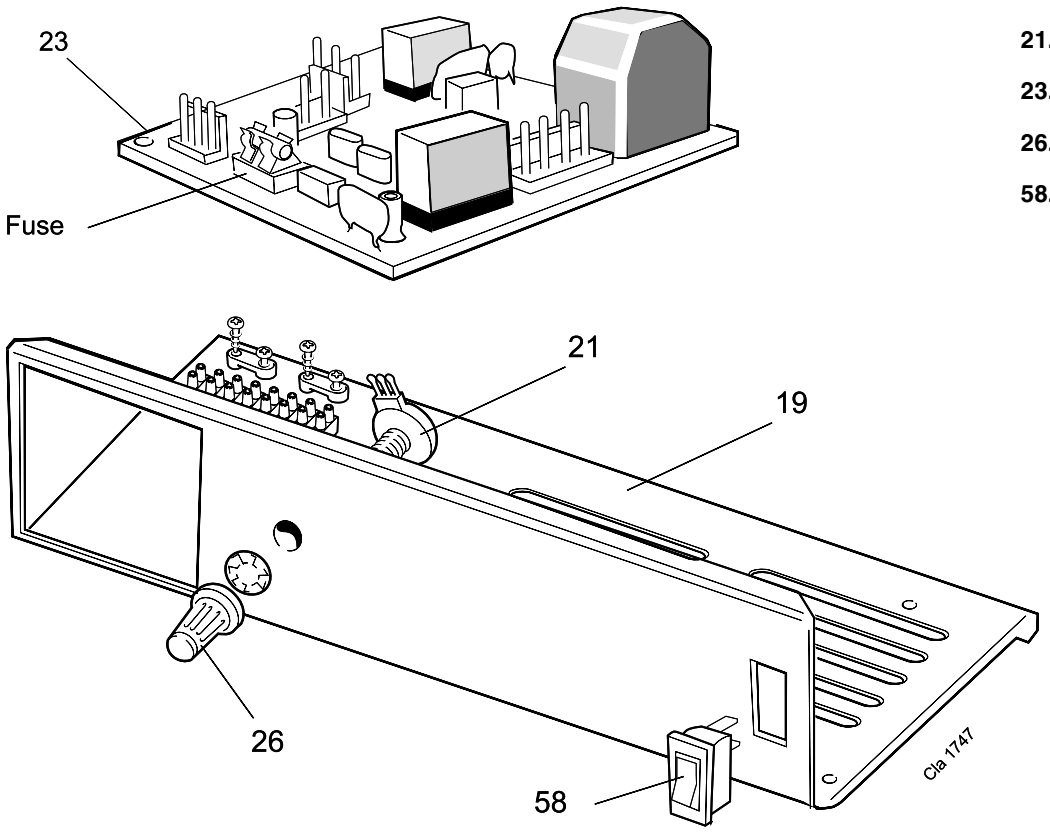

LEGEND

19. Control box.

21. Thermostat potentiometer.

23. Printed circuit board.

26. Thermostat knob.

58. Mains on/off switch.

74 BURNER ASSEMBLY - Exploded View

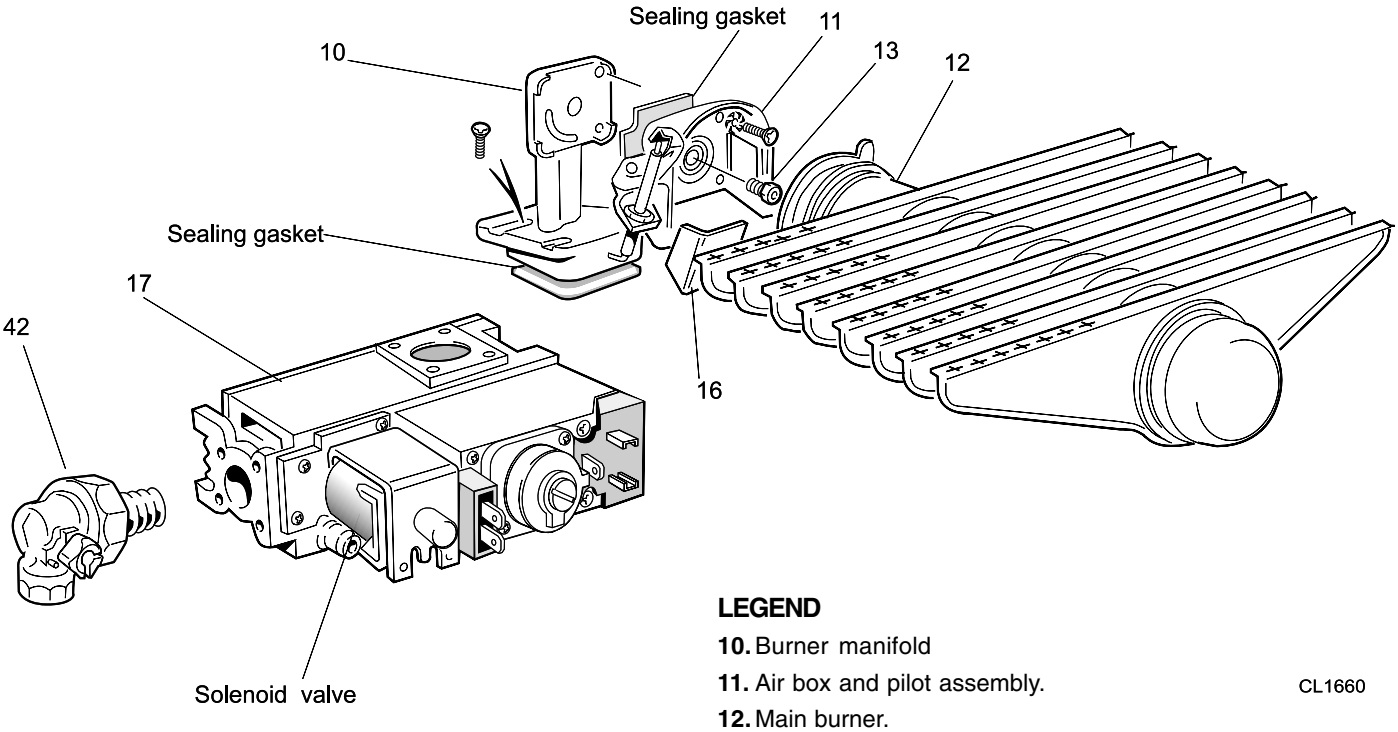

LEGEND

10. Burner manifold

11. Air box and pilot assembly.

12. Main burner.

13. Main burner injector.

16. Pilot shield.

17. Gas control valve.

42. Gas service cock.

NOTES

Technical Training

The Ideal Boilers Technical Training Centre offers a series of first class training courses for domestic, commercial and industrial heating installers, engineers and system specifiers.
For details of courses please ring: 01482 498 432

The code of practice for the installation, commissioning & servicing of central heating systems

CERTIFIED PRODUCT
Manufactured under a BS EN ISO 9001: 1994
Quality System accepted by BSI

Ideal Boilers, P.O. Box 103, National Ave, Kingston upon Hull, HU5 4JN. Telephone: 01482 492 251 Fax: 01482 448 858. Registration No. London 322 137.

Caradon Ideal Limited pursues a policy of continuing improvement in the design and performance of its products. The right is therefore reserved to vary specification without notice.

ENGINEERED FOR PEACE OF MIND

February 2003 UIN 157 020 A04

Caradon
Ideal Limited

Ideal Installer/Technical Helpline: 01482 498663

www.idealboilers.com