Classic LXRS RS 245P - 255P

Installation & Servicing

Wall Mounted, Balanced Flue Gas Boilers

Propane Gas Models Only

Deluxe models	G.C. Appliance No.	Standard models	G.C. Appliance No.
Classic LXRS 245 P	41 387 37	Classic RS 245 P	41 387 14
Classic LXRS 255 P	41 387 38	Classic RS 255 P	41 387 15

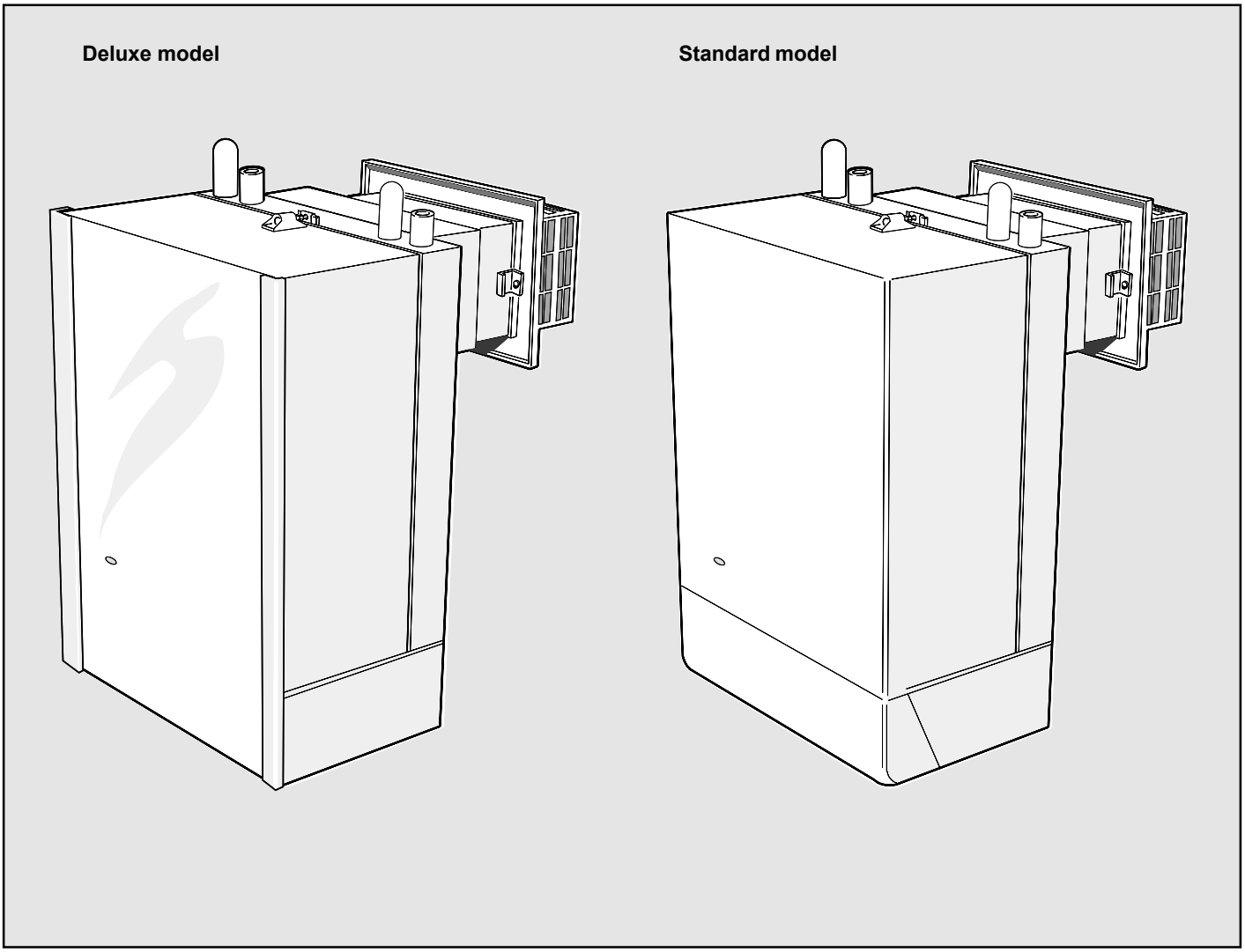

CAUTION. To avoid the possibility of injury during the installation, servicing or cleaning of this appliance, care should be taken when handling edges of sheet steel components.

Ideal BOILERS

CONTENTS

Air Supply. 6

Boiler Assembly - Exploded view 7

Boiler Clearances 4

Burner Assembly - Exploded view 25

Electrical Connections 13

Electrical Diagram 13

Electrical Supply 6

Extension Ducts - Fitting 12

Fault Finding 24

Flue Fitting 12

Flueing 5

Gas Safety Regulations 2

Gas Supply 5

Health & Safety Document No 635 4

Initial Lighting 15

Installation 8

Mandatory Requirements 4

Pump 9

Servicing 17

Short List of Parts 26

System Diagrams 14

Terminal Guards. 5

Water and Systems 6

INTRODUCTION

The **Classic RS 245P-255P** (standard) and **Classic LXRS 245P-255P** (deluxe model) is a range of automatically fully controlled, wall mounted, balanced flue, propane gas boilers.

The boiler casing is of white enamelled mild steel.

The boilers are supplied with a standard flue kit, suitable for rear outlet applications from 229mm (9") to 305mm (12").

The boilers are suitable for connection to pumped, open vented central heating systems; pumped central heating combined with pumped or gravity indirect domestic hot water systems; gravity or pumped indirect domestic hot water supply systems.

See Frame 1 for details of the correct boiler tappings to use.

LXRS 245P-255P (deluxe model) - The boiler casing is fitted with a glass fascia. The glass fascia can be lifted up to gain access to the boiler thermostat.

RS 245P-255P (standard model) - The boiler casing has a removable controls pod containing a drop-down door. The boiler thermostat is located behind the drop-down door.

All details for the deluxe jacket model are the same as the standard model, unless otherwise stated.

The boilers are suitable for connection to pumped, open vented central heating systems; pumped central heating combined with pumped or gravity indirect domestic hot water systems; gravity or pumped indirect domestic hot water supply systems.

See Frame 1 for details of the correct boiler tappings to use.

OPTIONAL EXTRA KITS

Programmer Kit.

Extension ducts up to 585 mm (23") are available.

Overheat Thermostat Kit is available to allow the boiler to be used on sealed systems.

Sealed System Unit which fits on top of the appliance is also available as an optional extra (suitable for standard boilers only).

GAS SAFETY (INSTALLATION AND USE) Regulations 1994, amendments 1996 or rules in force.

It is law that **all** gas appliances are installed by a CORGI registered installer, identified by ❀, in accordance with the above regulations. Failure to install appliances correctly could lead to prosecution. It is in your own interest, and that of safety, to ensure the law is complied with.

The installation of the boiler MUST also be in accordance with the latest I.E.E (BS 7671)Wiring Regulations, local building regulations, bylaws of the local water authority, the Building Regulations and Building Standards (Scotland) and any relevant requirements of the local authority.

Detailed recommendations are contained in the following British Standard Codes of Practice:

BS. 5482	Domestic butane & propane burning appliances.
BS. 6891	Low pressure installation pipes.
BS. 6798	Installation of gas fired hot water boilers of rated input not exceeding 60 kW.
BS. 5449	Forced circulation hot water systems.
BS. 5546	Installation of gas hot water supplies for domestic purposes (2nd Family Gases).
BS. 5440:1	Flues for gas appliances of rated input not exceeding 60 kW.
BS. 5440:2	Ventilation for gas appliances of rated input not exceeding 60 kW.
BS. 7593	Treatment of water in domestic hot water central heating systems.

Table 1 - General Data

Boiler Size				RS 245 P	RS 255 P
Gas supply connection				Rc 1/2 (1/2)1/2" (BSP Female)	
Flow connection				22mm copper	
Return connection				22mm copper	
Maximum static water head			m (ft.)	30.5 (100)	
Minimum static water head			m (ft.)	0.45 (1.5)	
Electrical supply				230 V ~ 50 Hz	
Fuse rating				External; 3A	
Water content			litre (gal.)	3.65 (0.8)	4.6 (1.0)
Dry Weight	Deluxe model		kg (lb)	49.3 (108.7)	57.2 (126.1)
	Standard model		kg (lb)	46.3 (102.1)	54.2 (119.5)
Maximum installation weight			kg (lb)	34.7 (76.5)	42.7 (94.2)
Boiler size		Height	mm (in.)	600 (23.6)	600 (23.6)
		Width	mm (in.)	380 (15.0)	380 (15.0)
		Depth	mm (in.)	Deluxe 315 (12 3/8") Standard 300 (11 3/4")	

Table 2 - Performance Data

Boiler Size			RS 245 P	RS 255 P
Boiler input		kW	16.5	20.1
		(Btu/h)	(56 250)	(68 600)
	Gas consumption	l/s (ft³/h)	0.17 (22.5)	0.21 (27.5)
Boiler output		kW	13.2	16.1
		(Btu/h)	(45 000)	(55 000)
Burner Setting		mbar	35.8	35.7
pressure (HOT)		(in.w.g.)	(14.3)	(14.3)
Inlet pressure		mbar (in.w.g.)	37.0 (14.8)	37.0 (14.8)
Seasonal Efficiency (SEDBUK) *		%	72.2	71.1

*The value is used in the UK Government's Standard Assessment Procedure (SAP) for energy rating of dwellings.
The test data from which it has been calculated have been certified by BGplc 0087.

To obtain the gas consumption:

a. For l/s divide heat input (kW) by C.V. of the gas (MJ/m³)

b. For ft³/h divide heat input (Btu/h) by C.V. of the gas (Btu/ft³)

NOTE TO THE INSTALLER: LEAVE THESE INSTRUCTIONS ADJACENT TO THE GAS METER. ALSO COMPLETE THE BENCHMARK LOG BOOK AND GIVE THIS TO THE CUSTOMER.

benchmark™

1 BOILER WATER CONNECTIONS

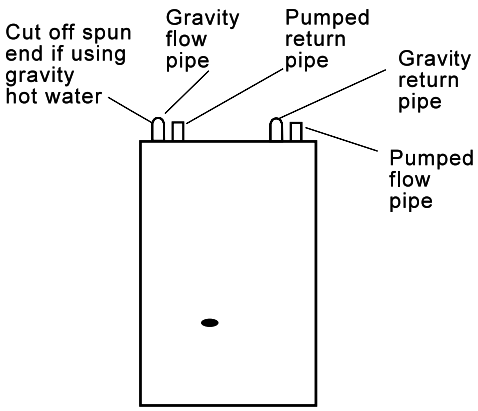

1. This appliance is NOT suitable for use in a direct hot water system.
2. If the boiler is to be used on a sealed system, an **Overheat Thermostat Kit** is available and must be installed in accordance with the instructions supplied with the kit.
3. If the boiler is to be used for gravity domestic hot water supply then cut off the spun ends of the gravity flow and return pipes and fit a 22 mm to 28 mm copper connection at the boiler gravity flow and return connections, in order to run the gravity circuits in 28 mm pipe.

Health & Safety Document No. 635.

The Electricity at Work Regulations, 1989.

Manufacturer's notes must NOT be taken in any way as overriding statutory obligations.

IMPORTANT. These appliances are certificated by the British Standards Institution for safety and performance. It is important, therefore, that no external control devices, e.g. flue dampers, economisers etc., are directly connected to these appliances unless covered by these 'Installation and Servicing' instructions or otherwise recommended by **Caradon Plumbing Ltd.** in writing. If in doubt please enquire.

Any direct reconnection of a control device not approved by **Caradon Plumbing Ltd.** could invalidate the BSI Certification and the normal appliance warranty. It could also infringe the Gas Safety Regulations and the above regulations.

LOCATION OF BOILER

The boiler must be installed on a flat and vertical wall, capable of adequately supporting the weight of the boiler and any ancillary equipment.

The boiler may be fitted on a combustible wall and insulation between the wall and the boiler is not necessary - unless required by the local authority.

The boiler must not be fitted outside.

2 BOILER CLEARANCES

The following minimum clearances must be maintained for operation and servicing. Additional space will be required for installation, depending upon site conditions.

If using the **Classic Sealed System Unit** (Standard models only) then refer to the instructions packed with the unit for the necessary clearances.

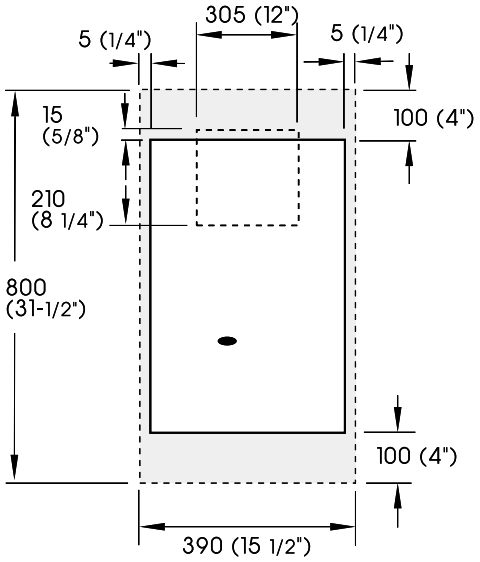

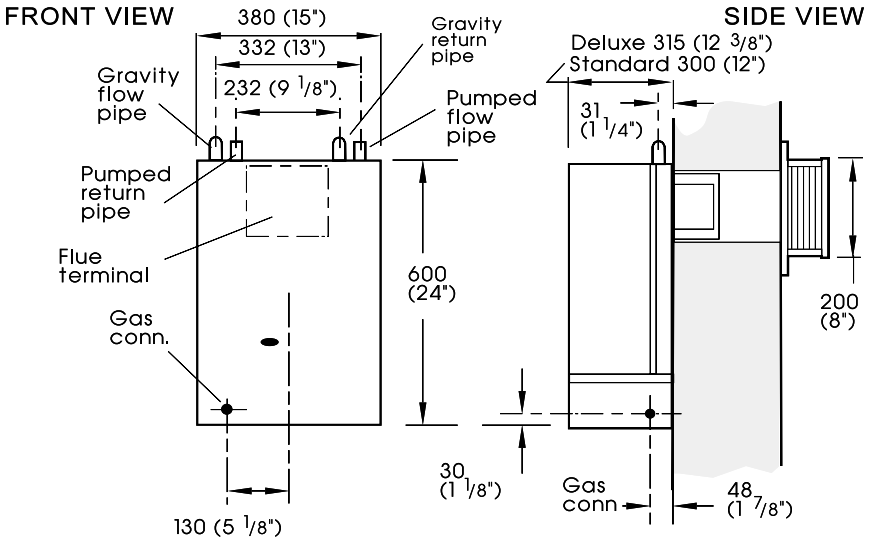

Front clearance; 450mm (17 3/4") from the front of the boiler casing. Minimum front clearance when built in to cupboard is 75mm (3")

Timber Framed Buildings

If the boiler is to be fitted in a timber framed building it should be fitted in accordance with the Institute of Gas Engineering document IGE/UP/7:1998.

Bathrooms

The boiler may be installed in any room or internal space, although particular attention is drawn to the requirements of the current I.E.E. (BS 7671) Wiring Regulations and, in Scotland, the electrical provisions of the building regulations applicable in Scotland with respect to the installation of the boiler in a room or internal space containing a bath or shower.

Where a room-sealed appliance is installed in a room containing a bath or shower then the appliance and any electrical switch or appliance control utilising mains electricity should be so situated that it cannot be touched by a person using the bath or shower.

Where installation will be in an unusual location, special procedures may be necessary and BS.6798 gives detailed guidance on this aspect.

Compartment Installations

A compartment used to enclose the boiler should be designed and constructed specially for this purpose. An existing cupboard or compartment may be used, providing it is modified for the purpose.

In both cases details of essential features of cupboards/ compartment design, including airing cupboard installation, are to conform to the following:

- BS. 6798
- The position selected for installation MUST allow adequate space for servicing in front of the boiler and for air circulation around the boiler, see section on 'Air Supply'.
- For the minimum clearances required for safety, and subsequent service, see Frame 2. In addition, sufficient boiler clearance may be required to allow lifting access to the wall mounting plate.

GAS SUPPLY

A local propane supplier should be consulted, at the installation planning stage, in order to establish the availability of an adequate supply of gas.

Installation pipes, cylinders and pressure regulators MUST be fitted in accordance with BS. 5482:1.

Bulk tank installations must comply with the Home Office code of practice for the storage of liquefied petroleum gas at fixed installations.

The complete installation MUST be tested for gas soundness and purged as described in the above code.

FLUE INSTALLATION

The flue must be installed in accordance with the recommendations of BS. 5440:1.

The following notes are intended for general guidance:

1. The boiler MUST be installed so that the terminal is exposed to external air.
2. It is important that the position of the terminal allows the free passage of air across it at all times.
3. Minimum acceptable spacing from the terminal to obstructions and ventilation openings are specified in Table 3.

Table 3 - Balanced flue terminal position

Terminal Position	Minimum Spacing
1. Directly below an opening window, air vent or other ventilation opening	300 mm (12")
2. Below guttering, drain pipes or soil pipes	300 mm (12")
3. Below eaves	300 mm (12")
4. Below balconies or a car port roof	600 mm (24")
5. From vertical drain pipes or soil pipes	75 mm (3")
6. From internal or external corners	600 mm (24")
7. Above adjacent ground, roof or balcony level	300 mm (12")
8. From a surface facing the terminal	600 mm (24")
9. From a terminal facing a terminal	600 mm (24")
10. From an opening in a car port (e.g. door or window) into dwelling	1200 mm (48")
11. Vertically from a terminal on the same wall	1500 mm (60")
12. Horizontally from a terminal on the wall	300 mm (12")

4. Where the lowest part of the terminal is fitted less than 2m (6' 6") above a balcony, above ground or above a flat roof to which people have access then the terminal MUST be protected by a purpose designed guard.

   Terminals guards are available from boiler suppliers. Ask for Tower flue Guard, Model K1. In case of difficulty seek advice from:

   Tower Flue Components Ltd.,
   Vale Rise, Tonbridge, Kent. TN9 1TB (Model C)
   Telephone No. 0732 351 555

   Ensure that the guard is fitted centrally

5. Where the terminal is fitted within 1000mm (39 1/2") of a plastic or painted gutter or 500mm (19 1/2") of painted eaves then an aluminium shield at least 1000mm (39 1/2") long should be fitted to the underside of the gutter or painted surface.
6. The air inlet/products outlet duct and the terminal of the boiler MUST NOT be closer than 25mm (1") to combustible material. Detailed recommendations on the protection of combustible material are given in BS.5440: 1990.

IMPORTANT.

It is absolutely ESSENTIAL to ensure, in practice, that products of combustion discharging from the terminal cannot re-enter the building or any other adjacent building through ventilators, windows, doors, other sources of natural air infiltration or forced ventilation/air conditioning.

If this should occur, the appliance MUST be turned OFF, labelled 'unsafe' and corrective action taken.

TERMINAL

The terminal assembly can be adapted to accommodate various wall thicknesses. Refer to Frame 4 - 'Unpacking'.

AIR SUPPLY

Detailed recommendations for air supply are given in BS.5440:2. The following notes are for general guidance:

1. It is NOT necessary to have a purpose provided air vent in the room or internal space in which the boiler is installed.

2. If the boiler is to be installed in a cupboard or compartment, permanent air vents are required (for cooling purposes) in the cupboard/compartment, at both high and low levels. The air vents must either communicate with room/internal space, or be direct to outside air. The minimum effective areas of the permanent air vents, required in the cupboard/ compartment, are specified as follows and are related to maximum rated heat input.

3. Both air vents MUST communicate with the same room or internal space or MUST be on the same wall to outside air.

4. In siting the air vents care must be taken to avoid the freezing of pipework.

Table 4 - High and low vent areas

Boiler	Air from room/internal Space cm² (in²)	Air direct Outside cm² (in²)
RS 245	170 (26)	83 (13)
RS 255	198 (31)	102 (16)

WATER CIRCULATION SYSTEM

The boiler must NOT be used for direct hot water supply. For the types of system and correct piping procedure refer to 'Introduction' and Frame 1.

The central heating system should be in accordance with BS. 6798 and, in addition, for smallbore and microbore systems, BS. 5449.

The domestic hot water system, if applicable, should be in accordance with the relevant recommendations of BS. 5546. Copper tubing to BS. 2871:1 is recommended for water carrying pipework.

The hot water storage cylinder MUST be of the indirect type and should preferably be manufactured of copper.

Single feed, indirect cylinders are not recommended and MUST NOT be used on sealed systems.

The hot water cylinder and ancillary pipework not forming part of the useful heating surface should be lagged to prevent heat loss and any possible freezing - particularly where pipes run through roof spaces and ventilated underfloor spaces.

IMPORTANT.

The boiler must be vented *(not on sealed systems.)*

Draining taps MUST be located in accessible positions, which permit the draining of the whole system - including the boiler and hot water storage vessel. They should be at least 1/2" BSP nominal size and be in accordance with BS. 2879.

The boiler is fitted with a special drain plug, which is provided, to drain the BOILER ONLY, in the event of the system drain plug being unable to do so. The hydraulic resistances of the boilers, at MAXIMUM OUTPUT with an 11°C (20°F) temperature differential, are shown in Table 5.

Table 5 - Water flow rate and pressure loss

Boiler Size		RS 245	RS 255
Boiler	kW	13.2	16.1
Output	Btu/h	45 000	55 000
Water Flow	l/min	19.0	22.8
Rate	gal/h	250	300
Pressure	mbar	34.0	45.0
Loss	in wg	13.6	18.0

THERMOSTATIC RADIATOR VALVES

Caradon Plumbing Ltd. recommend that heating systems utilising full thermostatic radiator valve control of temperature in individual rooms should also be fitted with a room thermostat controlling the temperature in a space served by radiators not fitted with such a valve, as stated in BS. 5449.

When thermostatic radiator valves are used, the space heating temperature control over a living / dining area or hallway having a heating requirement of at least 10% of the boiler heat output should be achieved using a room thermostat, whilst other rooms are individually controlled by thermostatic radiator valves.

However, if the system employs thermostatic radiator valves on all radiators, or two port valves without end switches then a bypass must be fitted in order to ensure a flow of water should all the valves be in the closed position.

ELECTRICAL SUPPLY

Wiring external to the appliance MUST be in accordance with the current I.E.E. (BS 7671) Wiring Regulations and any local regulations which apply.

The point of connection to the mains should be readily accessible and adjacent to the boiler, except for bathroom installations; the point of connection to the mains MUST be situated outside of the bathroom.

Note.
Where a room sealed appliance is installed in a room containing a bath or shower then the appliance and any electrical switch or appliance control utilising mains electricity should be so situated that it cannot be touched by a person using the bath or shower.

3 BOILER ASSEMBLY - Exploded View

Classic RS 230 shown

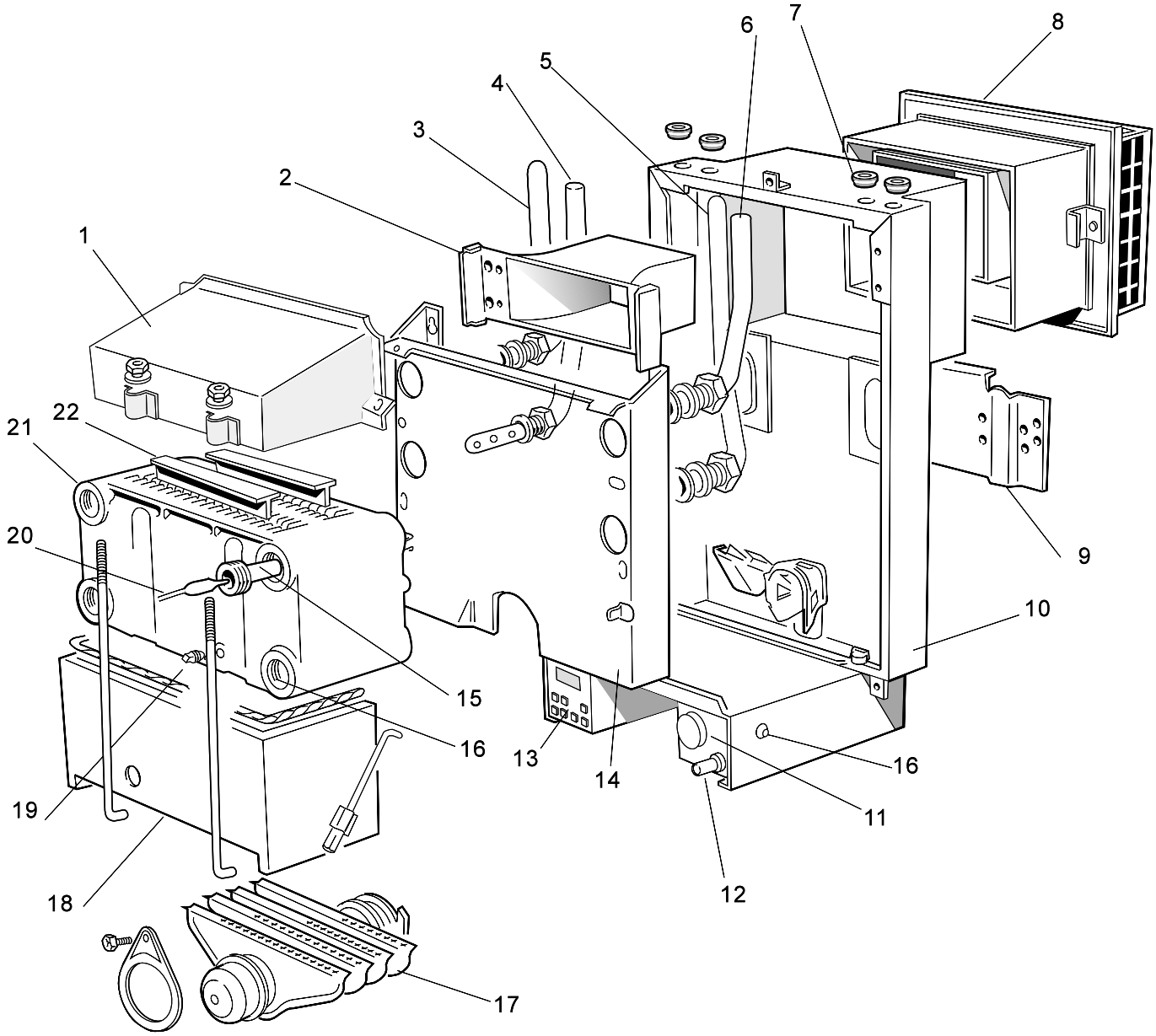

LEGEND

1. Collector hood
2. Boiler flue duct
3. Gravity flow pipe
4. Pumped return pipe
5. Gravity return pipe
6. Pumped flow pipe
7. Rubber sealing grommets
8. Balanced flue terminal
9. Wall mounting plate
10. Back panel
11. Control thermostat
12. Igniter button
13. Programmer (optional)
14. Interpanel
15. Thermostat pocket
16. Overheat thermostat (if fitted)
17. Main burner
18. Combustion chamber
19. Boiler drain point
20. Boiler thermostat
21. Heat exchanger
22. Flue baffles (if fitted)

4 UNPACKING

The boiler is supplied fully assembled in Pack 'A', together with a standard flue assembly for lengths up to 305mm (12") in Pack B.

Optional extras, if ordered (Programmer Kit, Sealed System Unit and Extension Duct Kit 'D') are available in separate boxes. Unpack and check the contents.

Pack A Contents: Also contained in Pack A ; the Hardware Pack (listed opposite), these Installation and Servicing Instructions and the User's Instructions.

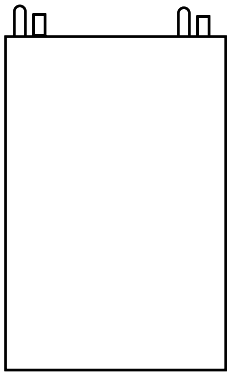

Complete boiler

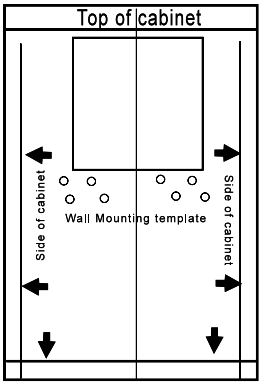

Wall mounting template

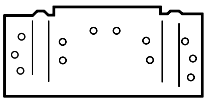

Wall mounting plate

Hardware Pack

- 50mm x No. 14 wood screw - 3 off
- 50mm x No. 10 wood screw - 3 off
- Wall plug - 6 off
- Data plate indicator arrow - 1 off
- Cover plate, painted

FLUE PACKS

Note. *All flue packs contain 2 sachets of sealant*

PACK B - contains a balanced flue terminal suitable for wall thicknesses from 229mm (9") to 305mm (12")

PACK B1 - contains a balanced flue terminal suitable for wall thicknesses from 318mm (12 1/2") to 394mm (15 1/2")

PACK C - contains a balanced flue terminal suitable for wall thicknesses from 114mm (4 1/2") to 191mm (7 1/2")

PACK D - contains extension ducts which, when used in conjunction with PACK B, are suitable for wall thicknesses from 406mm (16") to 584mm (23").

Note. *Wall thicknesses outside those specified cannot be accommodated. An overlap of at least 50mm at any duct joint must be allowed.*

5 UNPACKING - continued

Standard Model

1. Unpack the boiler
2. Remove the casing as follows and place to one side to avoid damage.
   - **a.** Release the controls pod fixing screws (a) 3 full turns only. Remove the pod by pulling it forward to disengage from the keyhole slots.
   - **b.** Undo the 3 screws (b), retaining the casing to the back panel.
   - **c.** Remove the casing in the direction of the arrows.
3. Remove the boiler from its packaging base. The boiler may now be stood on its controls support protection frame to ease handling and installation
4. Unpack the boiler terminal box and, if applicable, the extension flue box(es).

Deluxe Model (LX)

1. Unpack the boiler
2. Remove the casing as follows and place to one side to avoid damage.
   - **a.** Undo one screw (c), retaining the casing to the back panel.
   - **b.** Slide the glass fascia upward (arrow d)
   - **c.** Undo the two screws (e), retaining the casing to the back panel.
   - **d.** Remove the casing in the direction of the arrows.
   - **e.** Remove two screws (f) and remove the controls casing bottom panel.
3. Remove the boiler from its packaging base. The boiler may now be stood on its controls support protection frame to ease handling and installation
4. Unpack the boiler terminal box and, if applicable, the extension flue box(es).

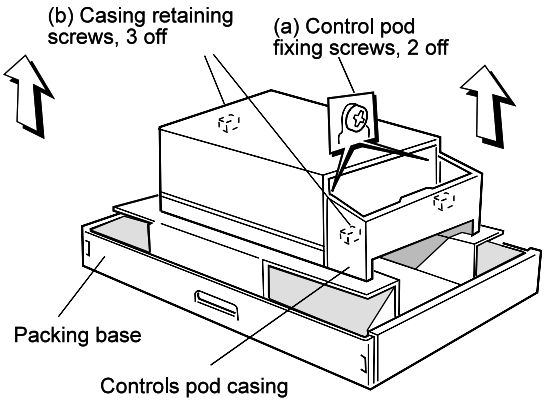

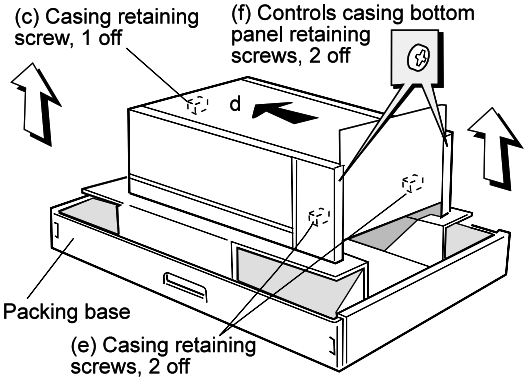

6 OPEN VENT SYSTEM REQUIREMENTS - Fully pumped

The system should be vented directly off the boiler flow pipe, as close to the boiler as possible. The cold feed entry should be inverted and MUST be positioned between the pump and the vent, and not more than 150mm (6") away from the vent connection.
There should be a minimum height - 450mm (18") of open vent above the cistern water level. If this is impossible refer below.
The vertical distance between the highest point of the system and the feed/expansion cistern water level MUST not be less than 450mm (18").
The pump MUST be fitted on the flow side of the boiler.
A suitable pump is a domestic circulator capable of providing an 11°C (20°F) temperature differential (e.g. Grundfos UPS 15/50 or equivalent).
The vertical distance between the pump and feed/expansion cistern MUST comply with the pump manufacturer's minimum requirements to avoid cavitation. Should these conditions not apply, either lower the pump position or raise the cistern above the minimum requirement specified by **Caradon Plumbing Ltd.**

Note. *A cold water feed must be available back to the boiler when all automatic valves are in the closed position (refer to BS. 6798) and, when close coupled, the feed must not be in a vertical leg.*

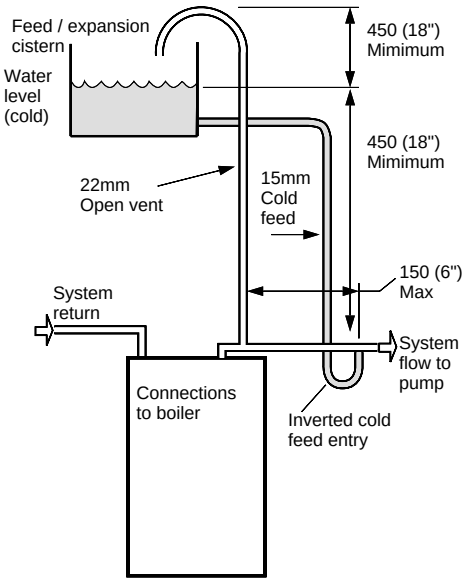

7 LOW HEAD INSTALLATIONS

The **Classic** range of boilers can be installed in low head situations by fitting a 'surge arrester' in the expansion pipe, as shown.

The following conditions MUST be observed:

1. The surge arrester must be at least 42mm in diameter x 150mm long, thus ensuring a MINIMUM air gap and a MINIMUM depth of water below the static water level (cold) of 75mm.
2. The static water level (cold) must be at least 200mm above the top of the horizontal flow pipe, fitted as shown. The vent connection MUST NOT be made immediately off the top of the boiler, as venting is made less efficient.
3. The maximum practical length of 15mm cold feed pipe should be used in order to reduce the effective volume of system water expanding into the feed/ expansion cistern to a minimum.

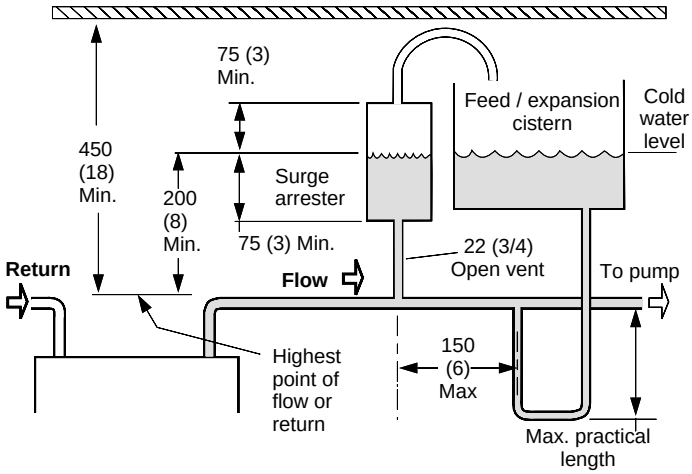

Minimum Requirements

Note. *The pump manufacturers minimum requirements must be complied with.*

All dimensions in mm (in.)

NB: Imperial dimensions are approximate

8 REQUIREMENTS FOR CORRECT GRAVITY HOT WATER PERFORMANCE

Note. *Gravity horizontal pipes should be ABOVE ceiling level and as SHORT as possible. A MINIMUM inclination of 25 mm per 3 m run (1" per 10') is required to avoid air locks. If these conditions cannot be met, pumped primaries MUST be used.*

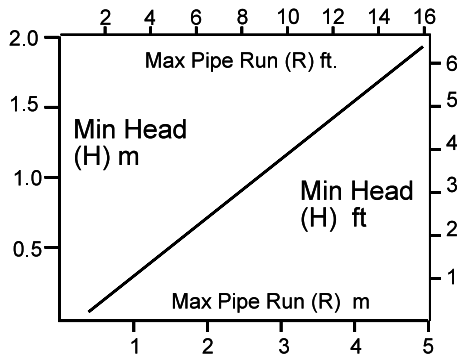

The above graph assumes 8 elbows in the gravity circuit. For each elbow in excess of 8, (R) must be reduced by 300 mm (12 in.) or (H) increased by 100 mm (4 in.)

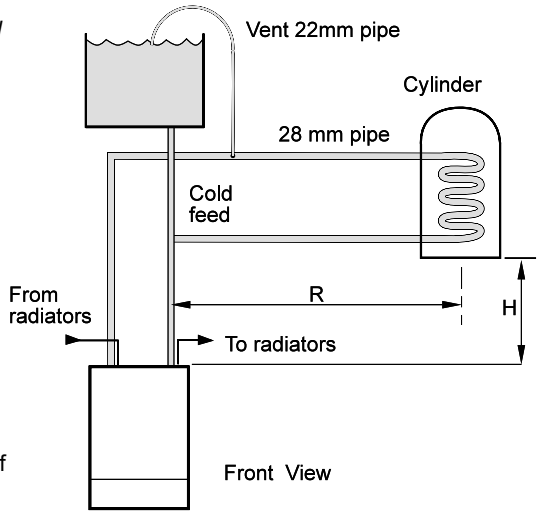

9 WALL MOUNTING TEMPLATE

1. Tape the template to the wall in the selected position. Ensure squareness by use of a plumbline - as shown.
2. Mark out the position of the 3 wallplate screws, choosing one from each group of 3 holes. Also mark the position of the hole for the duct, the jacking plate screw and the top cover plate screws.
3. Drill the 3 holes 8 mm (5/16"), and insert the three plastic plugs. Drill the jacking plate screw and the top cover plate screw holes 7mm (9/32") and insert the plastic plugs.
4. Remove the template from the wall.

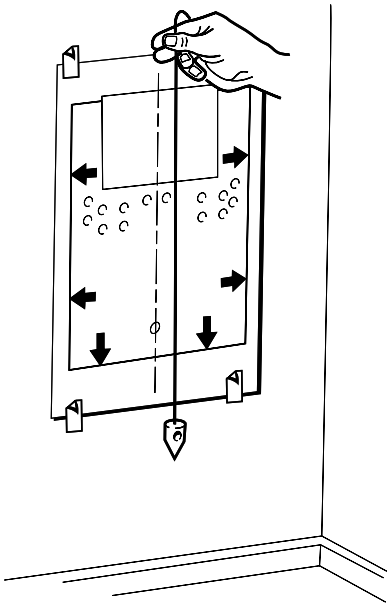

10 PREPARING THE WALL

NOTE. THE WALL MUST BE OF SUITABLE LOAD BEARING CAPACITY.

1. Cut the appropriate hole in the wall for insertion of the terminal assembly.

   Note. *The terminal must not come into contact with a combustible material such as that used in the non-standard construction of timber framework and plasterboard etc.*

2. Fix the mounting plate to the wall with the three No.14 x 50 mm screws provided.

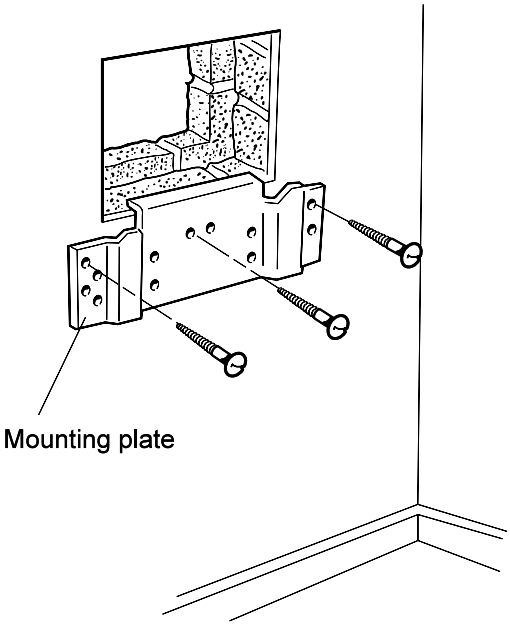

11 PREPARING THE BOILER

Check the jacking plate is fitted and screwed home.

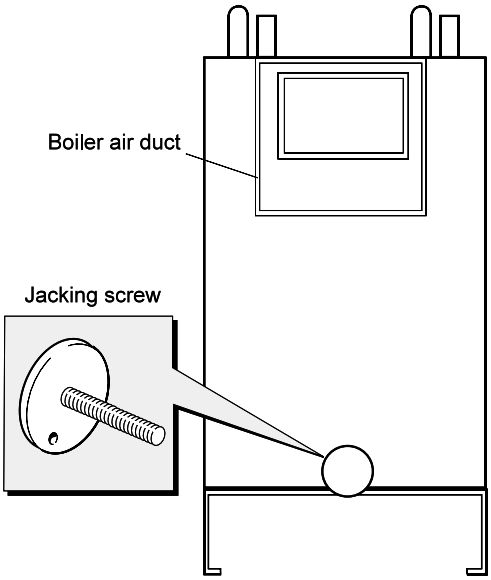

REAR VIEW OF BOILER

12 MOUNTING THE BOILER

1. Lift the boiler onto the wall mounting plate, entering the projecting flue duct into the opening cut in the wall, and lowering the two slots in the boiler back panel onto the angled tabs on the top of the wall mounting plate.

   DO NOT USE THE BURNER ASSEMBLY FOR LIFTING.

2. Adjust the flue to its horizontal position by tilting the boiler forward at the bottom then turning the jacking plate. Release and check alignment with a spirit level. Secure the jacking plate with a No.10 x 50 mm wood screw.

3. Fit the top cover plate in position above the boiler air duct with the two No.10 x 50 mm screws provided.

FLUE ALIGNMENT

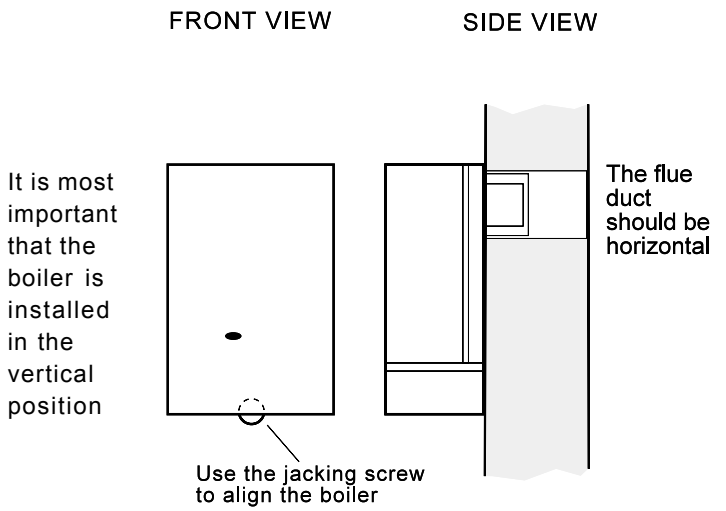

The wall must be of suitable load-bearing capacity

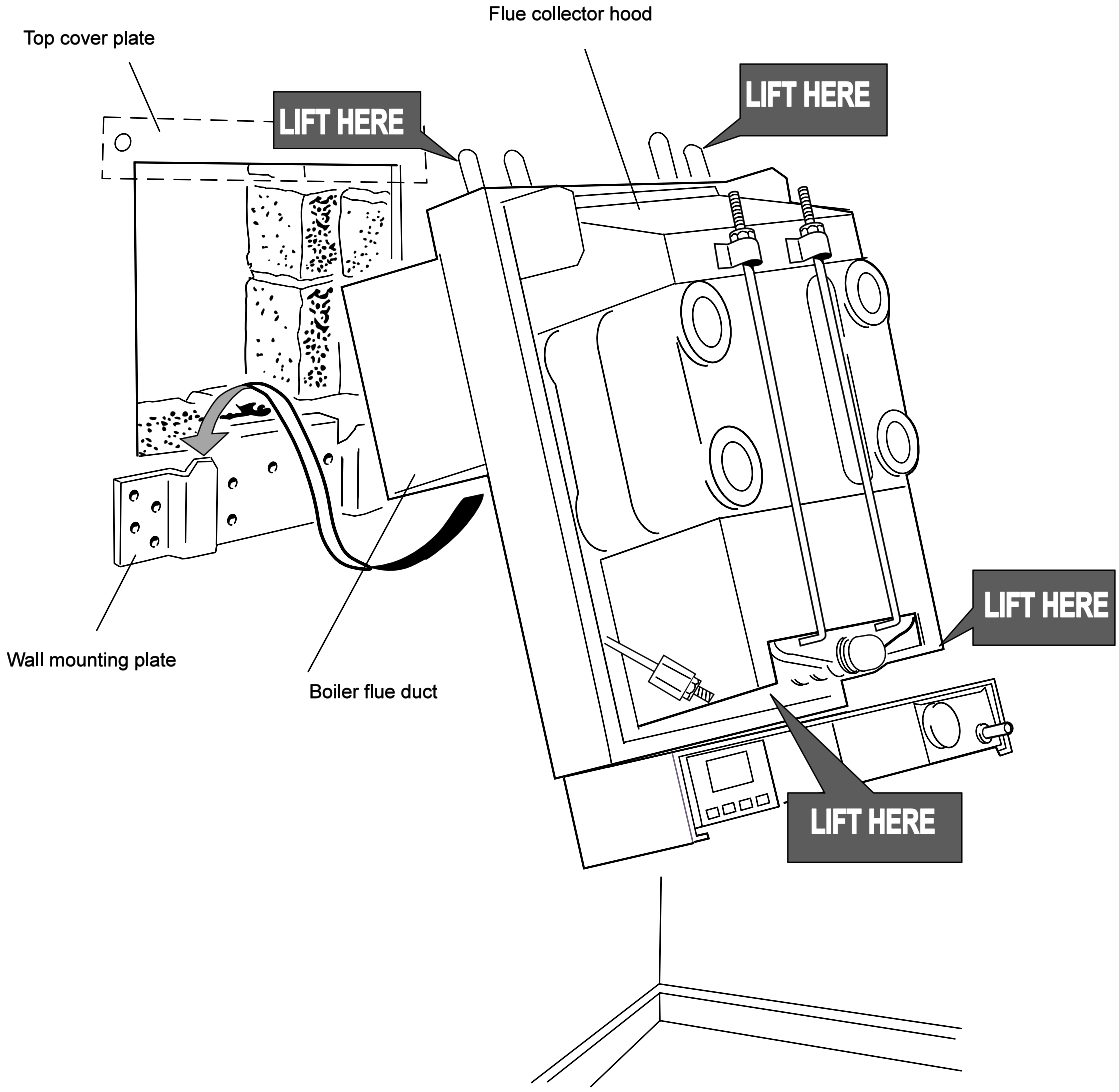

Do NOT use the burner assembly for lifting

13 FITTING THE FLUE ASSEMBLY

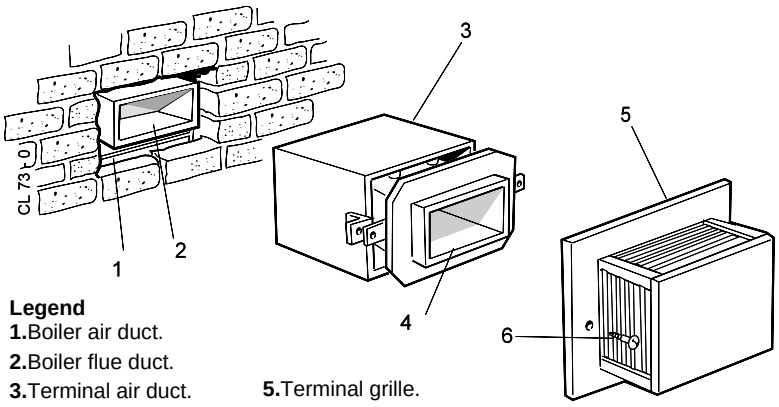

Legend
1.Boiler air duct.
2.Boiler flue duct.
3.Terminal air duct.
4.Terminal flue duct.
5.Terminal grille.
6.Terminal grille securing screws

Flue terminal assembly

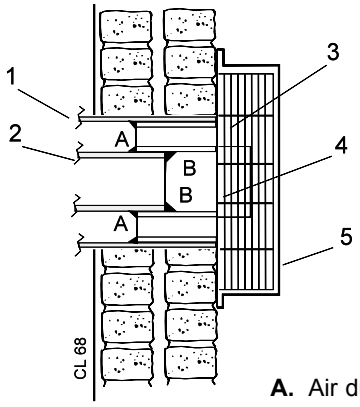

A. Air duct joint

B. Flue duct joint

Flue terminal shown in position

Note. *For duct lengths greater than 400 mm (16") refer to Frame 14*

1. Remove the 2 securing screws (*6*) and separate the terminal grille (*5*), terminal flue duct (*4*) and terminal air duct (*3*)
2. Smear sealant around outer perimeter of terminal air duct at the opposite end to the brackets and on the mating face of the boiler air duct (use one sachet of sealant).
3. Push the terminal air duct fully in until the fixing brackets contact the wall face.
4. Make good between the wall and duct, from OUTSIDE of the building.
5. From OUTSIDE of the building, pass the terminal flue duct through the wall opening and slide it over the boiler flue duct. Locate it as shown.
6. Seal the flue duct joint (B) with the remaining sachet of sealant provided.
7. Fasten the terminal grille to the flue and air ducts, using the 2 securing screws (*6*) provided

14 EXTENSION DUCTS Duct lengths greater than 400 mm (16")

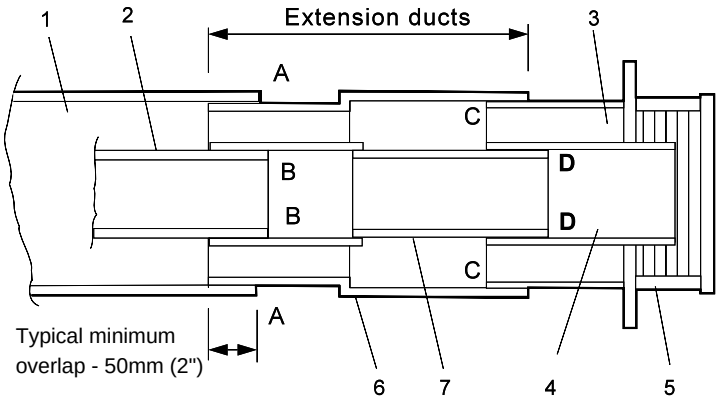

LEGEND

1. Boiler air duct
2. Boiler flue duct
3. Terminal air duct
4. Terminal flue duct
5. Terminal grille
6. Extension air duct
7. Extension flue duct

A - Air duct joint
B - Flue duct joint
C - Terminal air duct joint
D - Terminal flue duct joint

1. BEFORE PLACING THE BOILER IN POSITION loosely fit the extension air duct and terminal assembly to the boiler air duct and adjust to the required overall duct length. **Note.** *Ensure that any of the duct overlaps are not less than 50 mm (2").*
2. Secure the extension air duct in position, using the adhesive tape provided, at joint A. Ensure that a good seal is made.
3. Remove the terminal assembly.
4. Place the boiler in position - entering the extension duct into the wall opening.
5. Make good the brickwork around the wall opening.
6. Separate the terminal grille, terminal air duct and terminal flue duct. Refer to Frame 13.
7. From OUTSIDE of the building, pass the terminal air duct through the wall opening and slide it into the extension air duct, locating it as shown.
8. Smear sealant around outer perimeter of terminal air duct at the opposite end to the brackets and on the mating face of the boiler air duct (use one sachet of sealant).
9. Push the duct fully in until the fixing brackets contact the wall face.
10. Ensure that the duct is level and make good between the wall and the duct from OUTSIDE of the building.
11. From OUTSIDE of the building, slide the extension flue duct over the boiler flue duct to the same distance as the extension air duct. Seal the duct joint (B) with the sealant provided.
12. From OUTSIDE of the building, pass the terminal flue duct through the wall opening and slide it into the extension flue duct. Locate it as shown.
13. From OUTSIDE of the building, seal the duct joint D with the sealant provided.
14. Fasten the terminal grille to the flue and air ducts, using the 2 securing screws provided

15 GAS CONNECTION

A MINIMUM gas pressure of 37 mbar (14.8 in.w.g.) MUST be available at the boiler inlet with the boiler operating.

The main gas cock is on the left hand side of the gas control valve, as shown (Frame 25).

To facilitate connection the gas cock may be removed from the gas control valve.

16 WATER CONNECTIONS

1. Remove the plastic plugs from the flow and return pipes.
2. Make all water connections and check for water soundness.

17 ELECTRICAL CONNECTIONS

WARNING. The appliance MUST be efficiently earthed.

A mains supply of 230 V ~ 50 Hz is required.

All external controls and wiring MUST be suitable for mains voltage. Wiring should be in 3-core PVC insulating cable NOT LESS than 0.75 mm^2 (24 x 0.2 mm) to BS.6500, Table 16.

Wiring external to the boiler MUST be in accordance with current I.E.E. (BS7671) Wiring Regulations and local regulations.

Connection must be made in a way that allows complete isolation of the electrical supply - such as a double pole switch, having a 3mm (1/8") contact separation in both poles or a plug and socket, serving only the boiler and system controls. The means of isolation must be accessible to the user after installation.

Note. *If the optional Programmer Kit is to be fitted, refer to the instructions provided with the kit, ignore this frame and go to Frame 18.*

The internal wiring of the control box is shown in Frame 19.

DETAIL OF CONTROL BOX TERMINALS

Note. *In order to connect the incoming mains wires, first remove the control box fixing screw then pull the box forward and downward to disengage.*

Ensure that the earth lead is longer than the live and neutral so that if the cable slips in its anchorage the current carrying conductors become taut before the earth conductor and that the cable is routed through the strain relief clamp. Ensure all cables are secure and that no basic insulation is accessible outside of the control box.

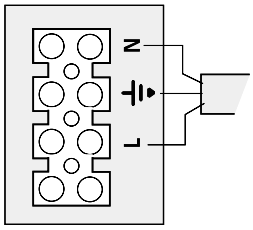

FLOW WIRING DIAGRAM

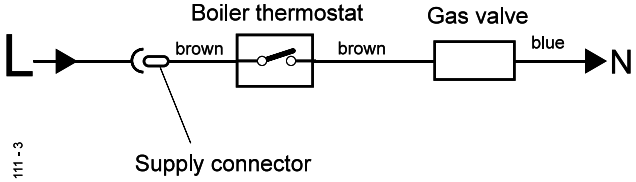

18 EXTERNAL CONTROLS

The wiring diagrams illustrated in Frames 20-23 cover the systems most likely to be fitted to this appliance.

For wiring external controls to the **Classic RS** boiler, reference should be made to the system wiring diagrams supplied by the relevant manufacturer, in conjunction with the wiring diagrams shown in Frames 19-23.

Difficulty in wiring should not arise, providing the following directions are observed:

1. Controls that switch the system ON and OFF, e.g. a time switch, MUST be wired, in series, in the live mains lead to the boiler.
2. Controls that override an ON/OFF control, e.g. a frost thermostat, MUST be wired into the mains lead, in parallel, with the control(s) to be overridden - refer to Frame 23.
3. Controls that switch the circulation pump only ON and OFF, e.g. a room thermostat, MUST be wired in series with the pump in the live pump lead.
4. If a proprietary system is used, follow the instructions supplied by the manufacturer.
5. SYSTEM DESIGNS FEATURING CONTROLS OR WIRING ARRANGEMENTS WHICH ALLOW THE BOILER TO FIRE WHEN THERE IS NO PUMPED OR GRAVITY CIRCULATION TAKING PLACE SHOULD NOT BE FITTED.

Advice on required modifications to the wiring may be obtained from the component manufacturers.

Notes

1. *Connections between a frost thermostat and the time control should be made without disturbing other wiring.*
2. *A frost thermostat should be sited in a cool place in the house, but where it can sense heat from the system.*

19 PICTORIAL WIRING

LEGEND

b blue

br brown

g/y green/yellow

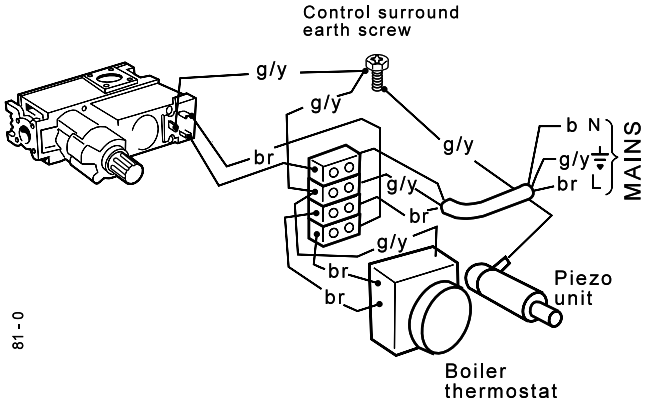

20 MID POSITION VALVE

Notes. **Pumped only**

1. Some earth wires are omitted for clarity. Ensure proper earth continuity when wiring.
2. Numbering of terminals on thermostats is specific to the manufacturer.
3. This is a fully controlled system - set the boiler thermostat to maximum.
4. Switchmaster 'Midi' is similar in operation but the wiring differs slightly; see manufacturer's literature.

LEGEND

b	blue	**bk**	black	**or**	orange	**gy**	grey
r	red	**br**	brown	**w**	white	**g/y**	green/yellow

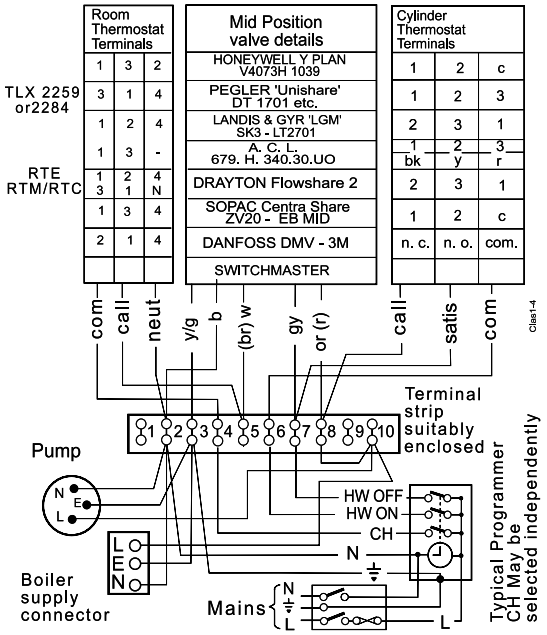

21 TWO SPRING CLOSED VALVES

Notes. **Pumped only**

1. Some earth wires are omitted for clarity. Ensure proper earth continuity when wiring.
2. Numbering of terminals on thermostats is specific to the manufacturer.
3. This is a fully controlled system - set the boiler thermostat to maximum.
4. Switchmaster valve has grey and orange auxiliary switch leads but the grey wire must be connected to the live supply.

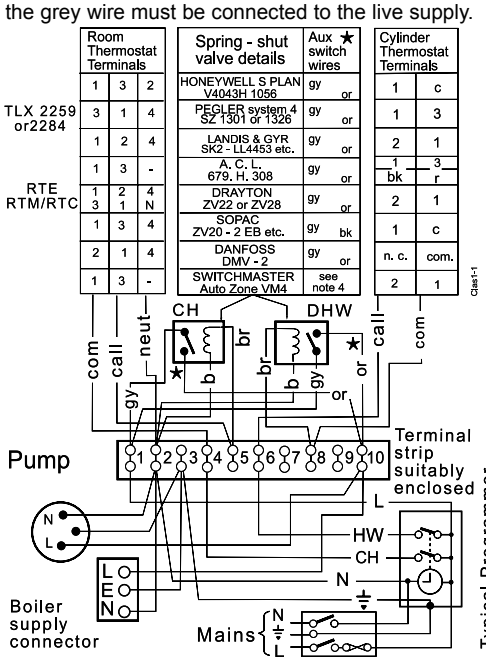

LEGEND

b	blue	**br**	brown	**w**	white	**v**	violet
bk	black	**r**	red	**pk**	pink	**g/y**	green/yellow
		y	yellow	**or**	orange		

22 HONEYWELL 'C' PLAN

Notes. **Gravity HW & Pumped CH**

1. Some earth wires are omitted for clarity. Ensure proper earth continuity when wiring
2. Numbering of terminals on thermostats is specific to the manufacturer.

LEGEND

w	-	white	**bk**	-	black	**br**	-	brown
or	-	orange	**b**	-	blue	**gy**	-	grey
g	-	green	**r**	-	red	**y**	-	yellow

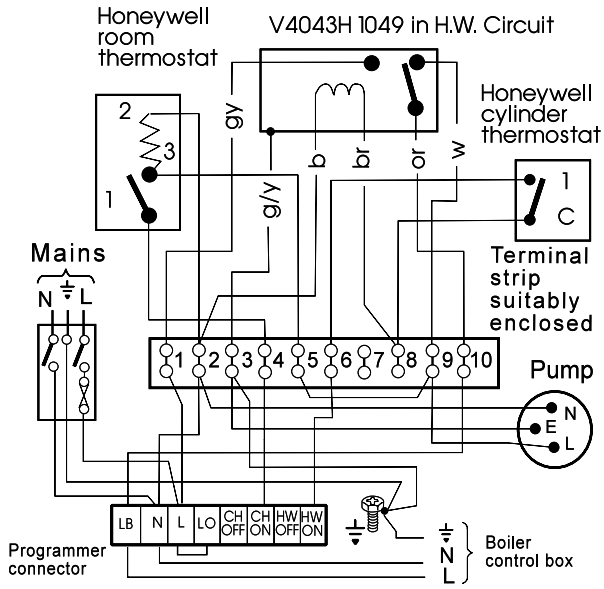

23 FROST PROTECTION

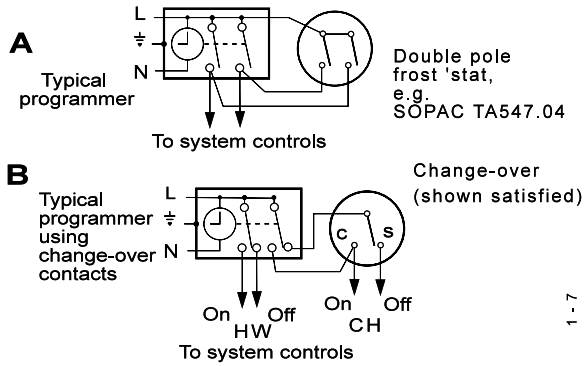

Central heating systems fitted wholly inside the house do not normally require frost protection as the house acts as a 'storage heater' and can normally be left at least 24 hrs. without frost damage. However, if parts of the pipework run outside the house or if the boiler will be left off for more than a day or so, then a frost 'stat should be wired into the system.

This is usually done at the programmer, in which case the programme selector switches are set to 'Off' and all other controls MUST be left in the running position. The frost 'stat should be sited in a cold place but where it can sense heat from the system. Wiring should be as shown, with minimal disturbance to other wiring of the programmer.

Designation of the terminals will vary, but the programmer and thermostat manufacturer's leaflets will give full details. Diagram A shows a double pole frost 'stat, which should suffice for all systems which do not use the 'OFF' terminals of the programmer. Diagram B shows a 'change-over' frost 'stat, which will cover most systems which do use 'CH OFF.' If, however, on such a system the HW pipework is in an isolated part of the house, a second frost 'stat may be used to protect it. If in doubt, ask your installer for advice.

24 COMMISSIONING AND TESTING

A. ELECTRICAL INSTALLATION

1. Checks to ensure electrical safety should be carried out by a competent person.
2. ALWAYS carry out preliminary electrical system checks, i.e. earth continuity, polarity, resistance to earth and short circuit using a suitable test meter.
3. Refit the control box.

B. GAS INSTALLATION

1. The whole of the gas installation MUST be inspected and tested for soundness, and purged in accordance with the recommendations of BS. 6891.
2. Purging air from the gas installation may be expedited by loosening the union on the gas service cock on the boiler and purging until gas is detected.
3. Retighten the union and check for gas soundness.

WARNING. Whilst effecting the required gas soundness test and purging air from the gas installation, open all windows and doors, extinguish naked lights and **DO NOT SMOKE.**

25 INITIAL LIGHTING

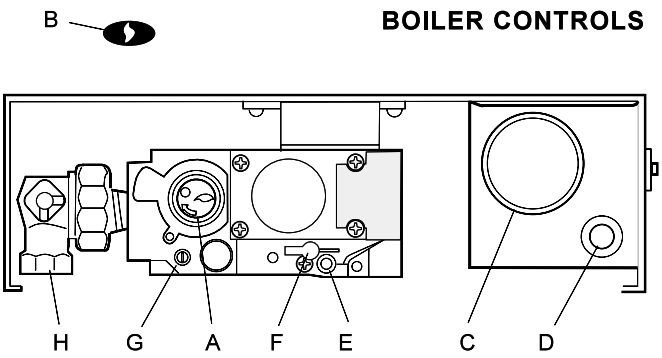

LEGEND

A	Gas valve control knob	**E**	Burner pressure test point
B	Sightglass	**F**	Main burner pressure adjuster
C	Thermostat control knob	**G**	Inlet pressure test point
D	Piezo unit ignition	**H**	Gas service cock

1. Check that all drain cocks are CLOSED and any valves in the flow and return lines are OPEN.
2. Check that the gas service cock (H) is OPEN and that the boiler thermostat control knob (C) is OFF.

   Deluxe Model (LX) - Fit the boiler casing (Frame 26) but do not fit the controls casing bottom panel.

   Standard Model - Fit the boiler casing (Frame 26) but do not fit the controls casing pod.
3. Loosen the screw in the burner pressure test point (E) and connect a gas pressure gauge via a flexible tube.
4. Turn the gas control knob clockwise until resistance is felt and then release.

   WAIT FOR 3 MINUTES.
5. Push in and retain fully depressed the gas control knob (A). Press and release the piezo unit button (D) repeatedly until the pilot is seen to light through the sightglass (B).
6. Hold the gas control knob depressed for 15 seconds after the pilot burner has ignited, then release.
7. If the pilot burner fails to remain alight at this stage, repeat the procedure detailed above but wait longer than 15 seconds before releasing the gas control knob.
8. Check the appearance of the pilot flame to ensure that it envelopes the tip of the thermocouple and is approximately 25mm (1") long.
   The pilot flame is factory set and no adjustment is possible. If the pilot flame is incorrect refer to Frame 35 .
9. Check that the electricity supply and all external controls are ON.
10. Set the boiler thermostat control knob to position 6 and check that the burner cross-lights smoothly from the pilot flame.
11. Test for gas soundness around the boiler gas component joints, using leak detection fluid.
12. Operate the boiler for 10 minutes to stabilise the burner temperature.
13. The boiler is pre-set at the factory to its nominal rating. Check the burner pressure against the values quoted in Table 2, page 3. The inlet pressure measured at the gas control valve must be 37mb.
14. Set the boiler thermostat control knob to OFF. Remove the pressure gauge tube and tighten the sealing screw in the pressure test point. Relight and check for gas soundness at the pressure test point.
15. **Deluxe Model (LX)** - Refit the controls casing bottom panel and screws.

    Standard Model - Refit the controls pod and tighten the front fixing screws.
16. **Deluxe Model (LX)** - Lower the glass fascia to its closed position.

    Standard Model - Close the pod door.

26 FITTING THE CASING

1. Check that the sealing strip is in place along the four rear edges of the boiler casing.
2. Lift the boiler casing up to the boiler assembly, locate over the upper support bracket and secure with the 3 captive screws.
3. The casing must be sealed correctly. This MUST be checked by ensuring that, at the top and bottom edges of the casing, the seal is compressed over its complete length.

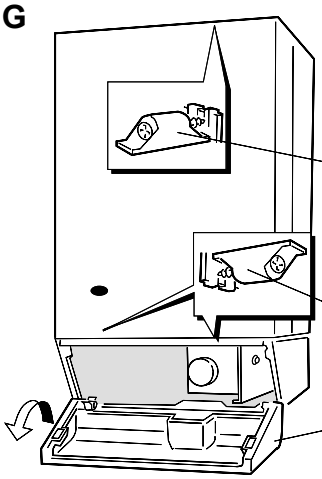

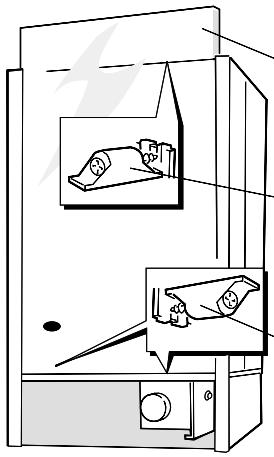

27 GENERAL CHECKS

Make the following checks for correct operation:

1. Turn the boiler thermostat OFF and ON and check that the main burner is extinguished and relit in response.
2. **Flame failure device**

   Check the operation of the flame failure device in the gas control valve, as follows:

   a. Extinguish the pilot flame by closing the gas service cock (H) and note the time taken for the flame failure device to shut down - identified by a click within the gas control valve.

   b. Open the gas service cock and relight the pilot.
3. With the burner alight again, turn the gas control knob clockwise until resistance is felt and then release it. The burner and pilot flame should shut down immediately.

   Note. *A latch in the gas control provides a safety delay period before the pilot can be relit.*
4. The correct operation of ANY programmer and all other system controls should be proved. Operate each control separately and check that the main burner or circulating pump, as the case may be, responds.
5. With the system HOT, examine all water connections for soundness. Then turn OFF the gas, electricity and water supplies to the appliance and drain down whilst the system is still hot, in order to complete the flushing process. Refill and vent the system and again check for water soundness.
6. Finally, set the controls to the user's requirements.

   The temperatures quoted below are approximate and vary between installations.

Knob Setting	Flow Temperature °C	°F
1	56	133
2	61	142
3	66	152
4	72	161
5	77	170
6	82	180

WARNING. The boiler MUST NOT be operated with the casing removed.

28 HANDING OVER

After completing the installation and commissioning of the system the installer should hand over to the householder by the following actions:

1. Hand the User's Instructions to the householder and explain his or her responsibilities under the Gas Safety (Installation and Use) Regulations 1994, amendments 1996 or rules in force.
2. **Deluxe Model (LX)** - Draw attention to the lighting instruction label affixed to the controls casing bottom panel.

   Standard Model - Draw attention to the lighting instruction label affixed to the controls pod door.
3. Explain and demonstrate the lighting and shutting down procedures.
4. The operation of the boiler and the use and adjustment of ALL system controls should be fully explained to the Householder, to ensure the greatest possible fuel economy, consistent with household requirements of both heating and hot water consumption.

   Advise the User of the precautions necessary to prevent damage to the system and to the building, in the event of the system remaining inoperative during frosty conditions.
5. Explain the function and the use of the boiler thermostat and external controls.
6. Explain the function of the boiler overheat thermostat (*if fitted*) and emphasise that if cutout persists, the boiler should be turned off and a CORGI registered installer consulted.
7. Explain and demonstrate the function of time and temperature controls, radiator valves etc., for the economic use of the system.
8. If any Programmer Kit is fitted, then draw attention to the Programmer Kit User's Instructions and hand them to the Householder.
9. **After installation, commissioning and customer hand-over instructions please complete the benchmark appliance log book and leave this with the customer.**
10. Stress the importance of regular servicing by a CORGI registered installer and that a comprehensive service should be carried out AT LEAST ONCE A YEAR.

29 SCHEDULE

To ensure the continued safe and efficient operation of the appliance, it is recommended that it is checked at regular intervals and serviced as necessary. The frequency of servicing will depend upon the installation condition and usage, but should be carried out at least annually .

It is the law that any service work must be carried out by a Corgi registered installer.

a. Light the boiler and carry out a pre-service check, noting any operational faults.

b. Clean the main burner.

c. Clean the heat exchanger.

d. Clean the main and pilot injectors.

e. Remove any debris from inside the base of the casing.

f. Check that the flue terminal is unobstructed and that the flue system is sealed correctly.

g. If the appliance has been installed in a compartment, check that the ventilation areas are clear.

The servicing procedures are covered more fully in Frames 30 to 35 and must be carried out in sequence.

WARNING. Disconnect the electrical supply.

IMPORTANT. After completing the servicing or exchange of components always test for gas soundness and carry out functional checks as appropriate.

When work is complete the casing MUST be correctly refitted, ensuring that a good seal is made.
The boiler must NOT be operated if the casing is not fitted.

Note. *In order to carry out either servicing or replacement of components, the boiler casing must be removed (Frame 30).*

30 BOILER CASING REMOVAL

1. If the **Classic Sealed System Unit** (standard boiler only) is fitted lift off the casing to expose the boiler casing top fixing screw.
2. **Deluxe Model (LX)** - Release the top captive casing screw. Lift the glass fascia and pull the sliding catch out, to retain the glass in the upper position. Release the lower 2 captive casing screws. Lift the casing off the boiler and retain in a safe place.

   Standard Model - Open the controls pod door and release the 3 captive screws at the top and bottom of the casing. Lift the casing off the boiler and retain in a safe place.
3. Isolate the gas supply at the service cock. Refer to Frame 36.

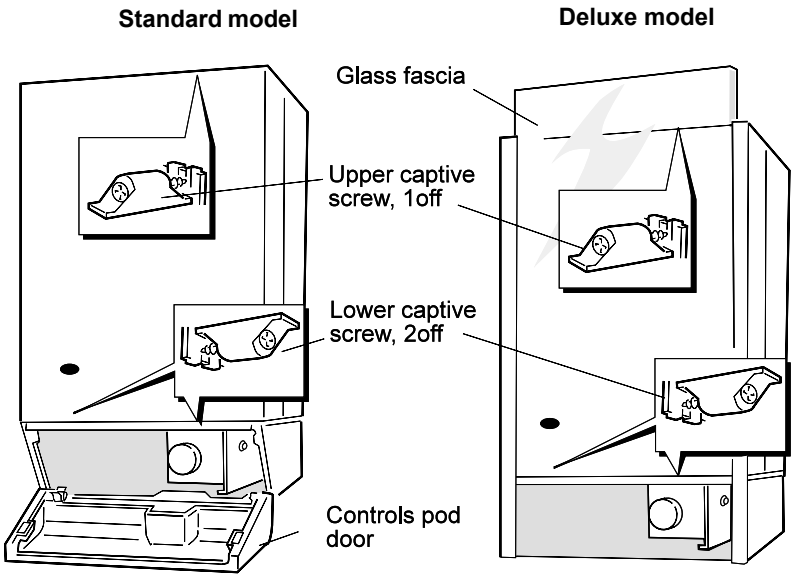

31 BURNER AND AIR BOX REMOVAL

1. Remove the screw retaining the burner support bracket to the combustion chamber.
2. Remove the M5 pozi screw situated at the left hand, bottom rear of the burner and pull the burner downwards in order to disengage the retention tab. Remove burner to a safe place for inspection and cleaning.
3. Unscrew the thermocouple connection at the gas control.
4. Remove the four screws retaining the air box / pilot assembly to the vertical manifold.
5. Remove the control box fixing screw and pull the box forward and downward to disengage.
6. Pull off the electrode lead at the piezo unit.
7. Open the clips retaining the thermocouple and HT lead. Remove the air box assembly to a safe place for inspection and cleaning.

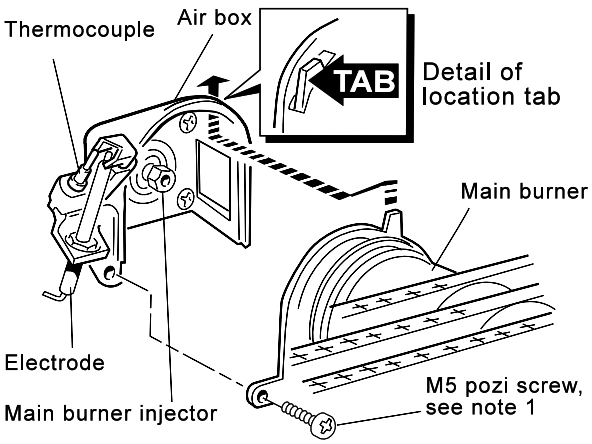

32 CLEANING THE FLUEWAYS

1. Remove the collector hood by undoing the front tie rod nuts and releasing the tie rods from the combustion chamber. Withdraw the rods.
2. Remove the 4 collector hood retaining screws and washers.

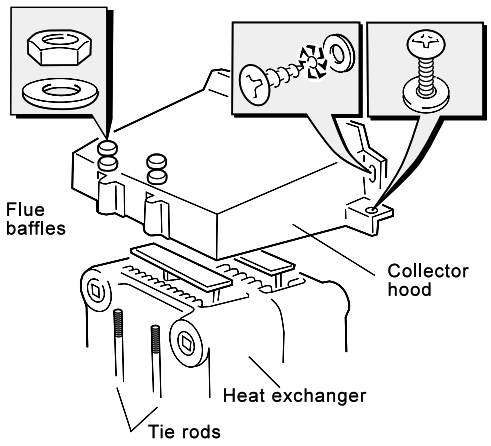

3. Unclip and remove the flue baffles from the heat exchanger.
   Note. *There are no flue baffles in the RS 255P.*
4. Remove all loose deposits from the heat exchanger, particularly between the fins, using a suitable brush.

34 RE-ASSEMBLY

Re-assemble in reverse order to that shown in Frames 30 to 33.

1. Refit the flue baffles and retain with the spring clips.
2. Refit the collector hood, replacing any damaged or deteriorating gaskets.

Note.
*Ensure rear **vertical** hood retaining screws are tightened **before** rear horizontal screws and the tie rods are located into the holes in the base of the combustion chamber*

3. Refit the burner and air box assembly. Ensure the burner tab is correctly located (refer to Frame 31).
4. Refit the burner support.
5. Refit the control box assembly.
6. Turn on the gas supply.
7. Ensure the sightglass in the boiler casing is clean and undamaged .
8. **Deluxe Model (LX)** - Refit the boiler casing. Tighten the 2 lower captive casing screws. Push the sliding catch in and lower the glass fascia to the closed position. Tighten the upper captive casing screw.

   Standard Model - Refit the boiler casing and tighten the 3 captive screws. Close the pod door.
9. Inspect the visible casing seal for correct fit.
10. **Deluxe Model (LX)** - Push the sliding catch in and lower the glass fascia to the closed position.

    Standard Model - Close the controls pod door.

33 CLEANING THE BURNER & PILOT ASSEMBLY.

Refer to Frame 31 for illustration of the procedure below.

1. Brush off any deposits that may have fallen onto the burner head, ensuring the flame ports are unobstructed, and remove any debris that may have collected.

   Note. *Brushes with metallic bristles MUST NOT be used.*
2. The main burner injector can be removed, checked and cleaned or replaced as required. Ensure an approved jointing compound is used, sparingly.
3. Inspect the pilot burner, thermocouple and spark electrode; ensure they are clear and in good condition. Check that:
   - **a.** The pilot burner injector is not blocked or damaged (refer to Frame 39 for removal details).
   - **b.** The pilot burner is clean and unobstructed.
   - **c.** The spark electrode is clean and undamaged.
   - **d.** The spark lead is in good condition and securely connected.
   - **e.** The spark gap is correct. Refer to Frame 35.
   - **f.** The thermocouple tip is not burned or cracked.
   - **g.** The position of the thermocouple relative to the pilot burner is correct. Refer to Frame 35.
   - **h.** The thermocouple terminal at the gas valve is clean.
4. Re-assemble the burner / air box assembly in reverse order. Ensure that the burner tab is correctly located. Refer to Frame 31.

Note.
The pilot shield is positioned around the pilot assembly bracket and is located by the electrode retaining nut.

35 PILOT BURNER CHECKING

1. Turn on the gas supply.
2. Light the pilot (refer to Frame 25) and check that the pilot flame envelopes the tip of the thermocouple and is approximately 25 mm (1") long. The pilot is factory set to maximum and no further adjustment should be necessary. However, if the pilot flame appears small, check the pilot injector. Refer to Frame 39.

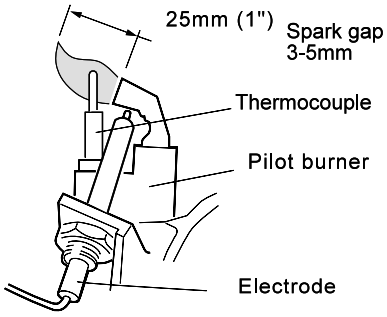

Detail of pilot burner flame

Heat Input / Setting Pressure
After each occasion of servicing, reference should be made to Table 2, which quotes details of the rated output, with the related burner setting pressure and the heat input.

REPLACEMENT OF PARTS

36 GENERAL

When replacing any component:

a. Isolate the electricity supply.

b. Turn off the gas supply at the boiler - refer to the illustration below. **Note.** *The gas cock is shown in the CLOSED position.*

c. Remove the boiler casing (refer to Frame 30).

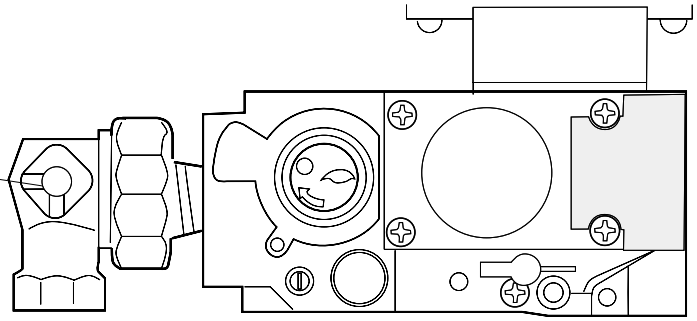

IMPORTANT.
When work is complete the casing MUST be correctly refitted - ensuring that a good seal is made.

The boiler MUST NOT be operated if the casing is not fitted.

37 SIGHTGLASS REPLACEMENT

1. Refer to Frame 36.

2. Unfasten the 2 nuts and washers holding the sightglass assembly to the casing front panel.

3. When fixing the new assembly, make certain that the parts are in the correct order. The frame MUST have the return edge at the bottom.

4. Retighten the two nuts to ensure an airtight seal. Do NOT overtighten.

5. Replace the boiler casing.

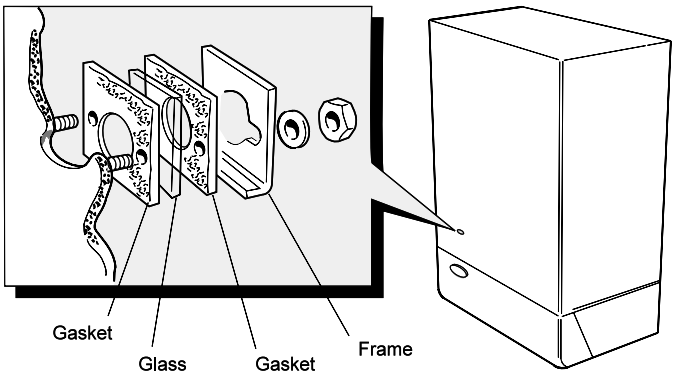

Note. ***Standard model*** *illustrated.*

For **deluxe model (LX)**, slide glass fascia out before removing sightglass assembly. Refit the glass fascia after fitting the new sightglass assembly.

38 PIEZO UNIT REPLACEMENT

1. Refer to Frame 36.

2. Remove the control box fixing screw. Pull the box forward and downward to disengage.

3. Disconnect the ignition lead from the piezo unit.

4. Unscrew the locking nut at the rear of the piezo unit mounting bracket.

5. Remove the piezo unit. Refit the new unit and re-assemble in reverse order.

6. Refit the control box assembly.

7. Replace the boiler casing.

8. Check the operation of the new piezo unit.

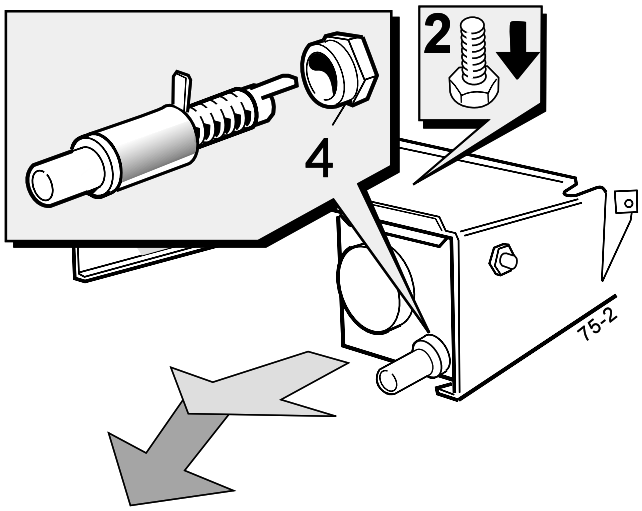

39 PILOT BURNER REPLACEMENT

1. Refer to Frame 36.
2. Remove burner and air box assembly. Refer to Frame 31.
3. Remove the electrode retaining nut. Remove the pilot shield and electrode.

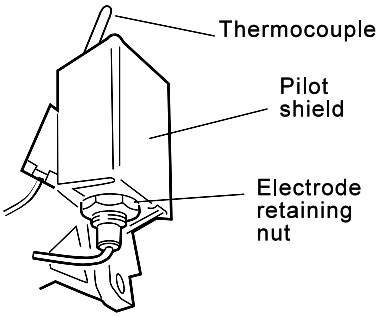

4. Unscrew the central pilot fixing screw and lift the pilot burner clear of the thermocouple and pilot injector.

   If required, the pilot injector may now be unscrewed and the injector checked or replaced as necessary.

   Ensure that the copper sealing washer is fitted when replacing the injector.
5. Replace the pilot burner and retain with the M4 screw previously removed.
6. Replace the electrode and pilot shield - retaining both with the electrode nut.
7. Replace the airbox assembly and ensure that the gasket is in position.

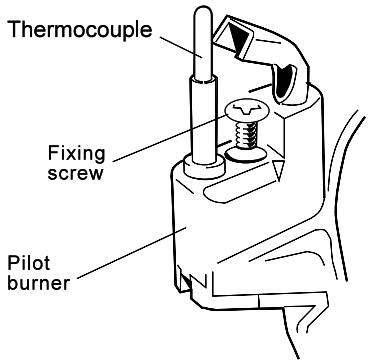

8. Replace the burner.
9. Replace the boiler casing.
10. Check the pilot length. Refer to Frame 35.
11. Check the pilot operation, ignition and cross-lighting.

40 SUPPRESSOR REPLACEMENT (IF FITTED)

1. Refer to Frame 36.
2. Remove the control box fixing screw. Pull the box forward and downward to disengage.
3. Remove the suppressor by unscrewing the suppressor lead connections from the terminal block.
4. Fit the new suppressor and re-assemble in reverse order. Ensure that all of the electrical connections are correctly remade - refer to 'Wiring Diagrams', Frames 19 - 23.
5. Refit the control box.
6. Replace the boiler casing.
7. Check the operation of the control thermostat.

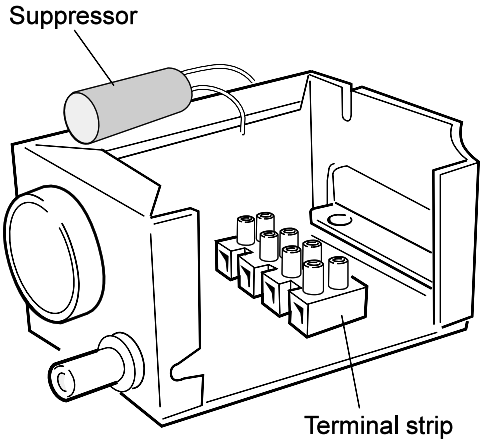

41 CONTROL THERMOSTAT REPLACEMENT

1. Refer to Frame 36.
2. Unclip the thermostat capillary from the 2 clips situated on the back panel.
3. Remove the thermostat phial from the pocket in the heat exchanger.
4. Pull off the thermostat knob.

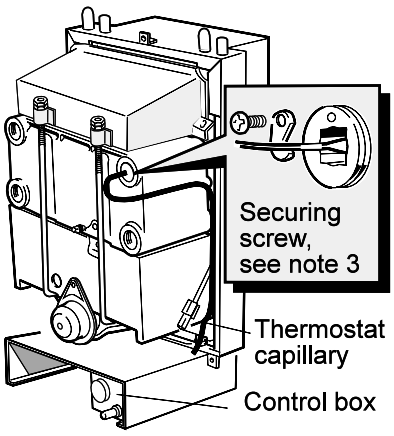

Detail thermostat pocket

5. Remove the control box fixing screw and pull the box forward and downward to disengage.
6. Remove the 2 screws securing the thermostat.

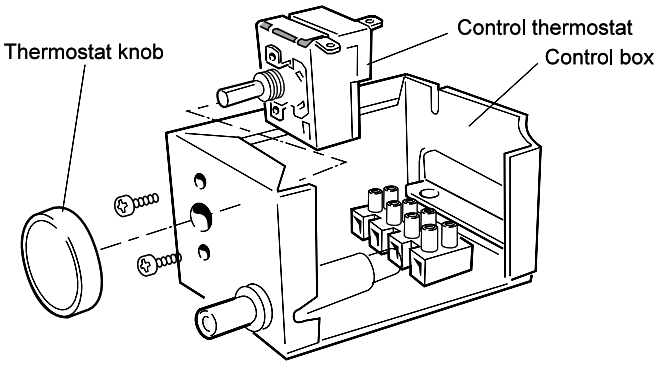

7. Pull off the 2 electrical connections from the thermostat head and the thermostat earth lead.
8. Fit the new thermostat and refit in reverse order. Ensure that the phial is correctly replaced in the pocket and the capillary routed as previously.
9. Replace the boiler casing.
10. Check the operation of the new thermostat. Refer to Frame 27.

42 OVERHEAT THERMOSTAT REPLACEMENT

1. Refer to Frame 36.
2. Slacken the screw at the thermostat pocket and withdraw the phial from the pocket.
3. Unclip the capillary from the back panel.
4. Remove the control box fixing screw and pull the control box forward and downward to disengage.
5. Remove the thermostat backnut.
6. Remove the 2 leads.
7. Fit the new thermostat (lead polarity immaterial), ensuring that the alignment peg on the thermostat sits in the small hole adjacent to the main fixing hole, and re-assemble in reverse order.
8. Replace the boiler casing.
9. Check the operation of the boiler.

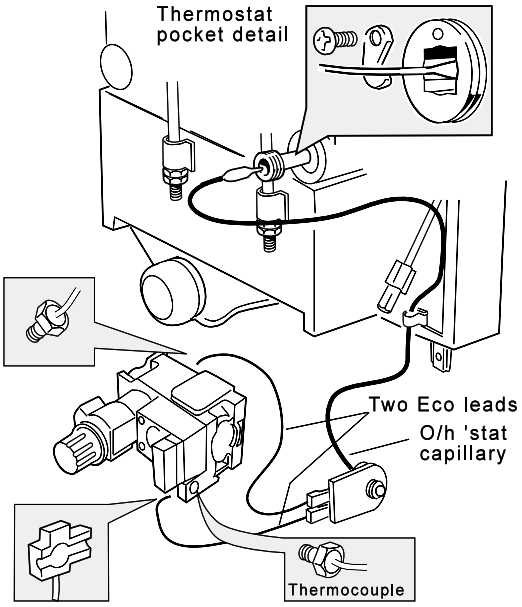

43 SPARK ELECTRODE / LEAD REPLACEMENT

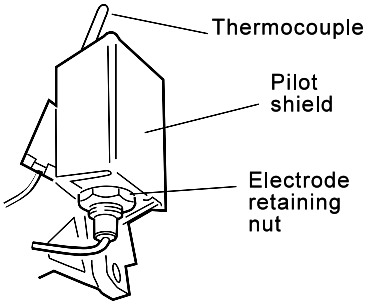

1. Refer to Frame 36.
2. Remove the control box fixing screw and pull the control box forward and downward to disengage.
3. Remove the electrode lead from the piezo unit.
4. Remove burner and air box assembly. Refer to Frame 31.
5. Remove the electrode retaining nut.
6. Remove the pilot shield.
7. Remove the spark electrode and integral lead.
8. Fit the new electrode and lead in reverse order, taking care to replace the pilot shield
9. Check the spark gap. Refer to Frame 35.
10. Refit the burner and control box.
11. Replace the boiler casing.
12. Check the pilot ignition.

44 THERMOCOUPLE REPLACEMENT

1. Refer to Frame 36.
2. Remove the burner and air box assembly. Refer to Frame 31.
3. Remove the electrode retaining nut.
4. Remove the pilot shield and electrode.
5. Unscrew the central pilot fixing screw. Lift the pilot clear of the thermocouple and pilot injector. Refer to Frame 39.
6. Refit the new thermocouple and reassemble in reverse order, ensuring that no sharp bends are used on the thermocouple and that the pilot shield is refitted.
7. Replace the boiler casing.
8. Check the operation of the thermocouple.

45 MAIN BURNER AND MAIN BURNER INJECTOR REPLACEMENT

1. Refer to Frame 36.
2. Remove the screw retaining the front of the burner support bracket to the combustion chamber.
3. Remove the M5 pozi screw and washer, situated at the left hand bottom rear of the burner. Pull the burner downwards to disengage the retention tab and remove the burner.
4. At this stage the main burner injector can be removed, checked, cleaned or replaced as required. Ensure that an approved jointing compound is used sparingly.
5. Fit new burner, ensuring that the retention tab is correctly located in the air box slot.
6. Refit the M5 retaining screw and washer.
7. Refit the front burner support bracket.
8. Refit boiler casing.
9. Check the burner for cross-lighting and flame stability.

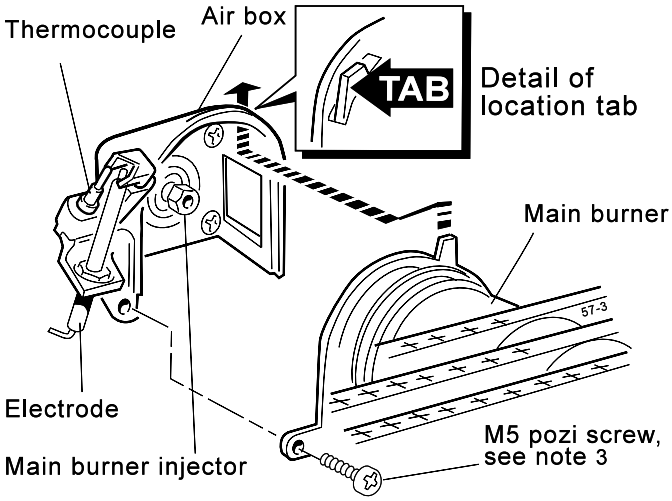

46 GAS CONTROL VALVE REPLACEMENT

1. Refer to Frame 36.
2. Remove the burner support bracket, burner and air box assembly. Refer to Frame 31.
3. Remove the gas control valve cover and remove the electrical connections.
4. Disconnect the thermocouple from the gas control valve.
5. Disconnect and remove the gas union from the control valve.
6. Whilst supporting the gas control valve, remove the two screws retaining the manifold to the back panel.
7. Remove the gas control / manifold assembly.
8. Remove the4 screws retaining the manifold to the gas control valve and fit the new manifold to the gas control valve, ensuring that it is fitted the correct way round (an arrow engraved on the back indicates the direction of flow).

   Note. *Remove the thermocouple reroute and gas cock stub and refit into the new gas control valve. Use an approved jointing compound on the pipe stub.*
9. Re-assemble in reverse order.
10. Replace the boiler casing.
11. Check the gas valve operation.

Note. *Refer also to Frame 54 'Exploded Views' for illustration of the procedure detailed below.*

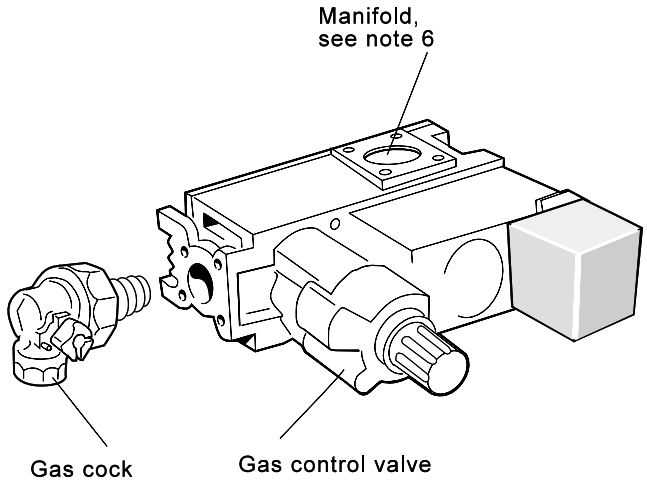

47 COMBUSTION CHAMBER INSULATION REPLACEMENT

1. Refer to Frame 36.
2. Remove the burner and air box assembly. Refer to Frame 31.
3. Remove the four tie rods.
4. Remove the combustion chamber.
5. Remove the 2 side panel retaining brackets.
6. Remove the side insulation panels.
7. Remove the front and rear insulation panels.
8. Fit the new front and rear insulation panels.
9. Fit the new side panels and retain with the brackets and screws previously removed.
10. Re-assemble in reverse order.

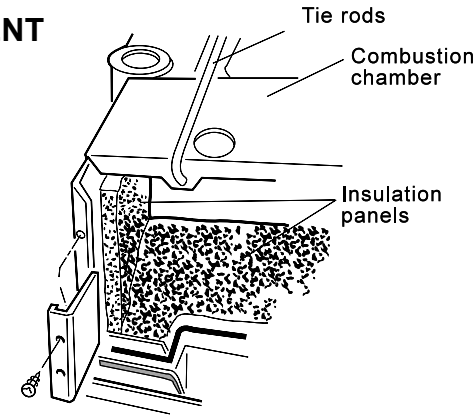

Detail of boiler combustion chamber

48 HEAT EXCHANGER REPLACEMENT

Note. *Refer to Frame 54 of 'Exploded Views' for illustration of the procedure detailed below.*

1. Refer to Frame 36.
2. Drain the system.
3. Remove the burner and air box assembly. Refer to Frame 31.
4. Disconnect the water flow and return connections. If compression fittings are used, cut the pipes both above and below the fittings in order to allow the heat exchanger assembly to be removed.
   Remove the heat exchanger drain plug and drain the residual water into a suitable receptacle.
5. Remove the collector hood. Refer to Frame 32.
6. Remove the 4 screws retaining the flue duct and remove the duct.
7. Remove the combustion chamber by unscrewing the four tie rods.
8. Unclip the thermostat capillary and remove the phial from the pocket. Refer to Frame 41.
9. Slacken 3 turns only the 4 screws retaining the heat exchanger / interpanel assembly.
10. Lift the heat exchanger / inter-panel assembly upwards and forwards to disengage the keyhole fixings. Pull the assembly downwards to clear the water pipes from the back panel.
11. Remove the 4 rubber grommets from the top of the back panel, to facilitate the fitting of the new heat exchanger.
12. Fit the new heat exchanger assembly, complete with its 4 pipe connections and hang the 4 keyhole slots over the screws. Retighten the 4 screws.
13. Replace the 4 rubber grommets in order to seal the gap between the water pipes and the back panel.
14. Re-assemble in reverse order.
15. Remake all water connections.
16. Fully test all functions, including water and gas soundness.

49 CASING SEAL REPLACEMENT

1. Refer to Frame 36.
2. Remove the old seal from the casing surround.
3. Thoroughly clean the casing surfaces and fit the adhesive seals.
4. Replace the boiler casing.

Note.
Standard model illustrated. Use the same procedure for casing seal replacement on the Deluxe model.

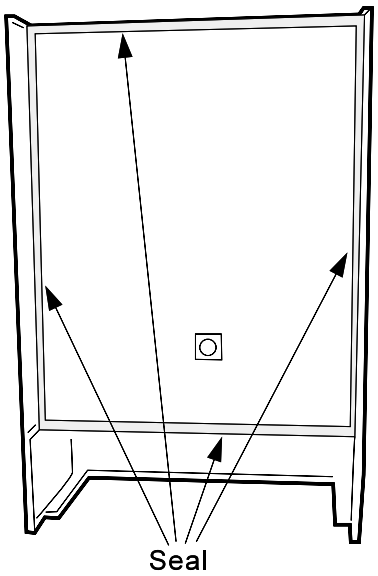

Inner view of boiler casing

50 PROGRAMMER REPLACEMENT (if fitted)

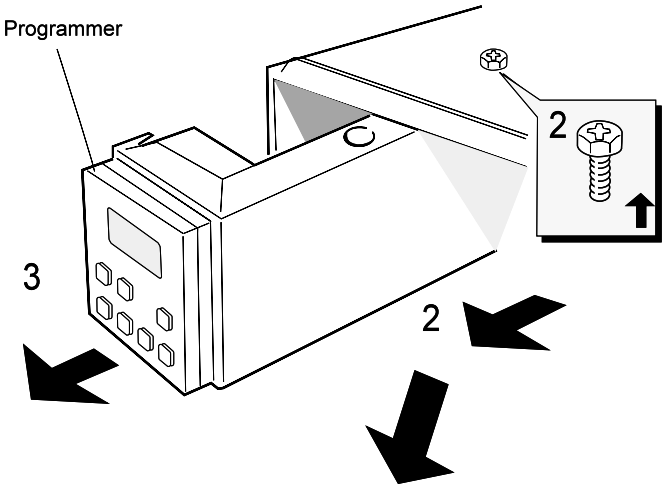

1. Refer to Frame 36.
2. Remove the programmer box fixing screw. Pull the box forward and downward to disengage.
3. Pull the programmer forward out of its box.
4. Pull off the spade connectors.
5. Fit the new programmer and re-assemble in reverse order.
6. Refit the boiler casing.
7. Set the programmer to the desired programme and check the operation of the boiler.

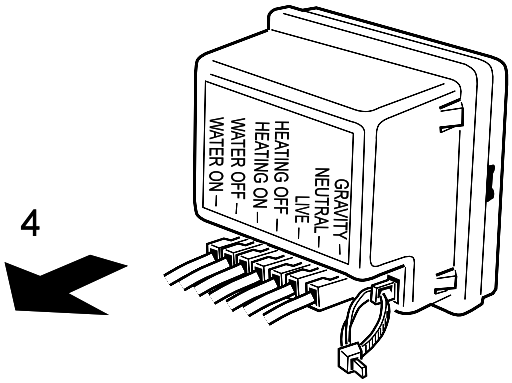

Detail of programmer

Before attempting any electrical fault finding ALWAYS carry out preliminary electrical system checks, i.e. earth continuity, polarity and resistance to earth using a suitable meter.

Detailed instructions on the cleaning and adjustment or replacement of faulty components are contained in the 'Servicing' section of this publication.

51 PILOT WILL NOT LIGHT

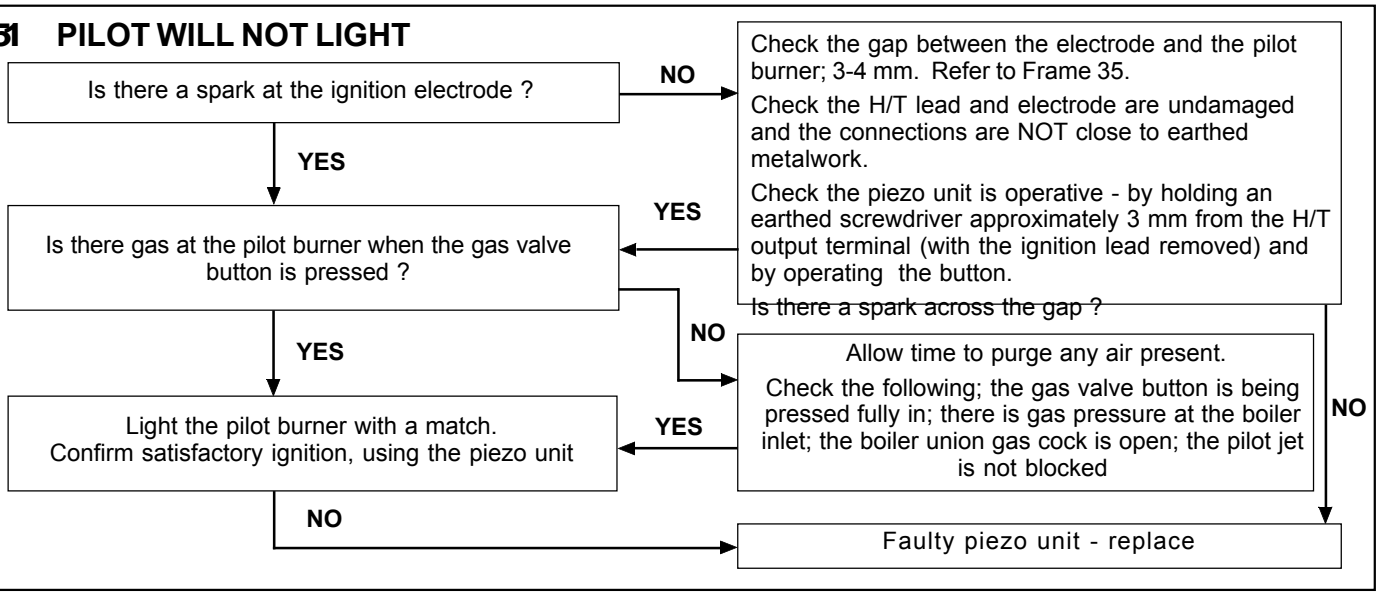

52 PILOT WILL NOT STAY LIT WHEN THE GAS VALVE BUTTON IS RELEASED

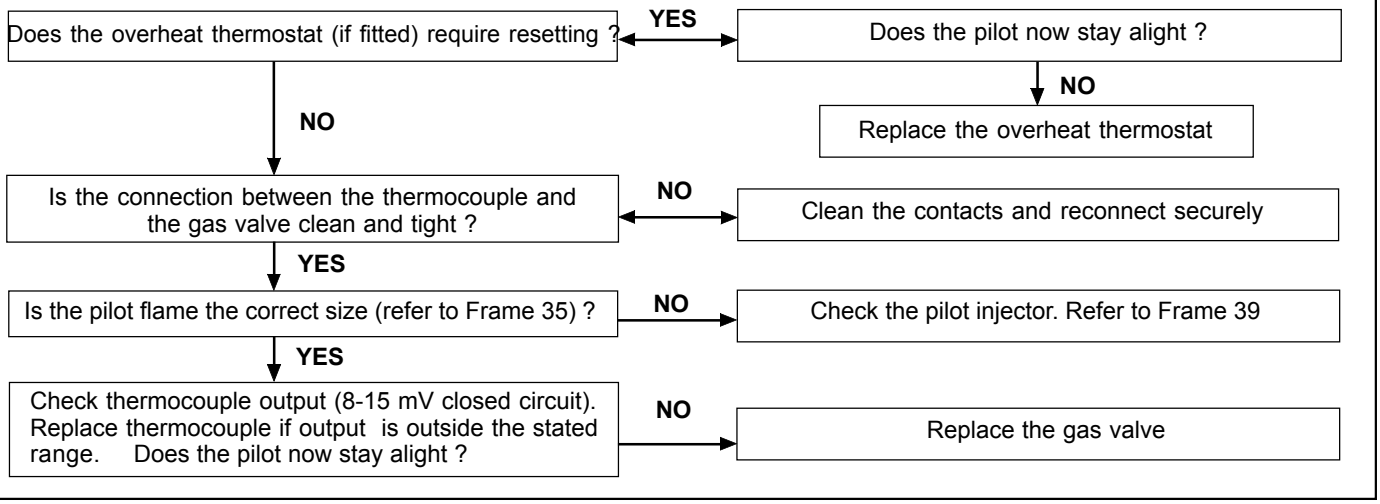

53 PILOT LIT BUT NO MAINS GAS

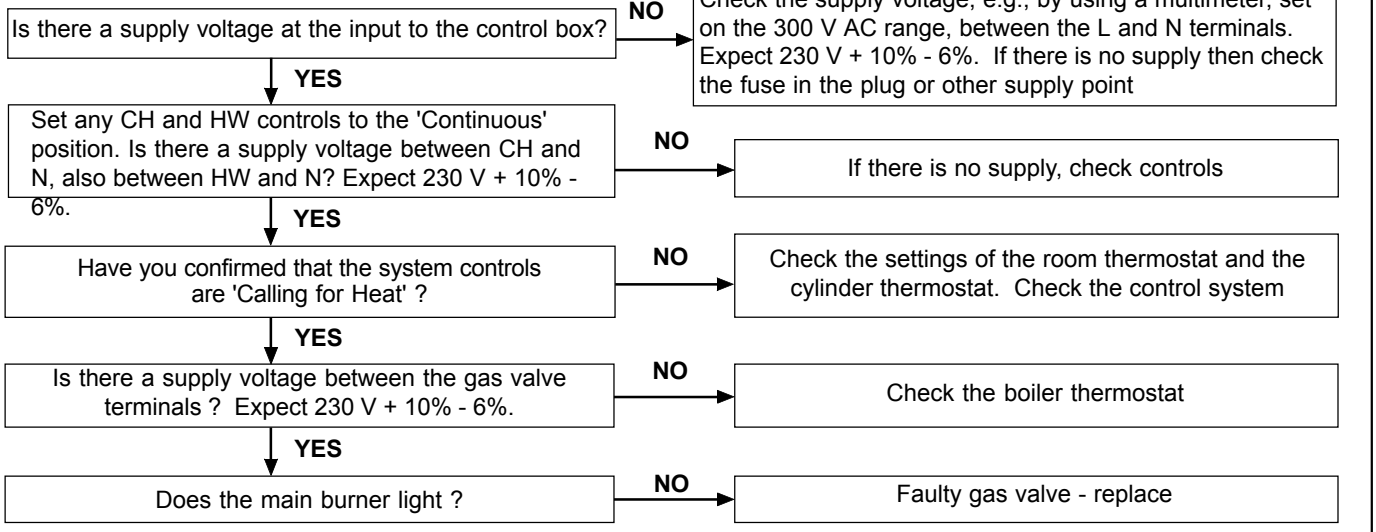

Note. *After any faults have been corrected, return all thermostatic and other controls to the previously noted settings*

54 BOILER ASSEMBLY - Exploded view

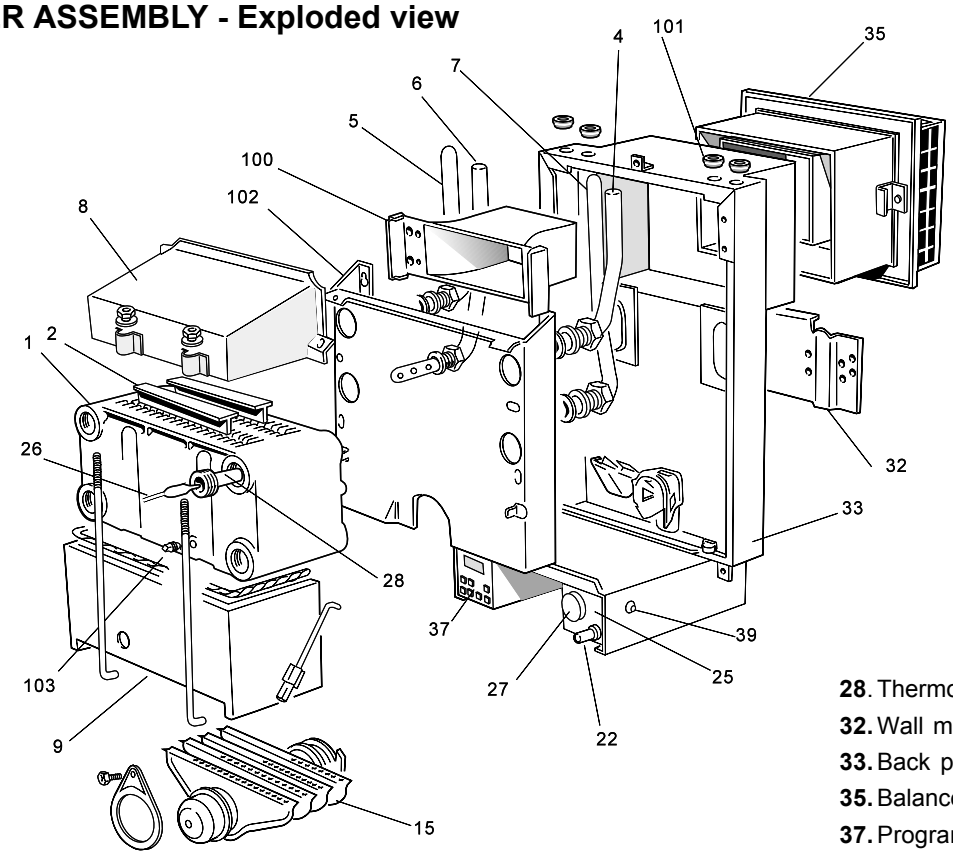

28. Thermostat pocket
32. Wall mounting plate
33. Back panel
35. Balanced flue terminal
37. Programmer (optional)
39. Overheat thermostat (if fitted)
100. Boiler flue duct.
101. Rubber sealing grommets
102. Interpanel
103. Boiler drain point

LEGEND (Numbers up to 44 relate to the B.G. spares list)

1. Heat exchanger
2. Flue baffles
4. Pumped flow pipe
5. Gravity flow pipe
6. Pumped return pipe
7. Gravity return pipe
8. Collector hood
9. Combustion chamber
15. Main burner
22. Igniter button
25. Control box
26. Boiler thermostat
27. Thermostat knob

55 BURNER AND CONTROLS- Exploded view

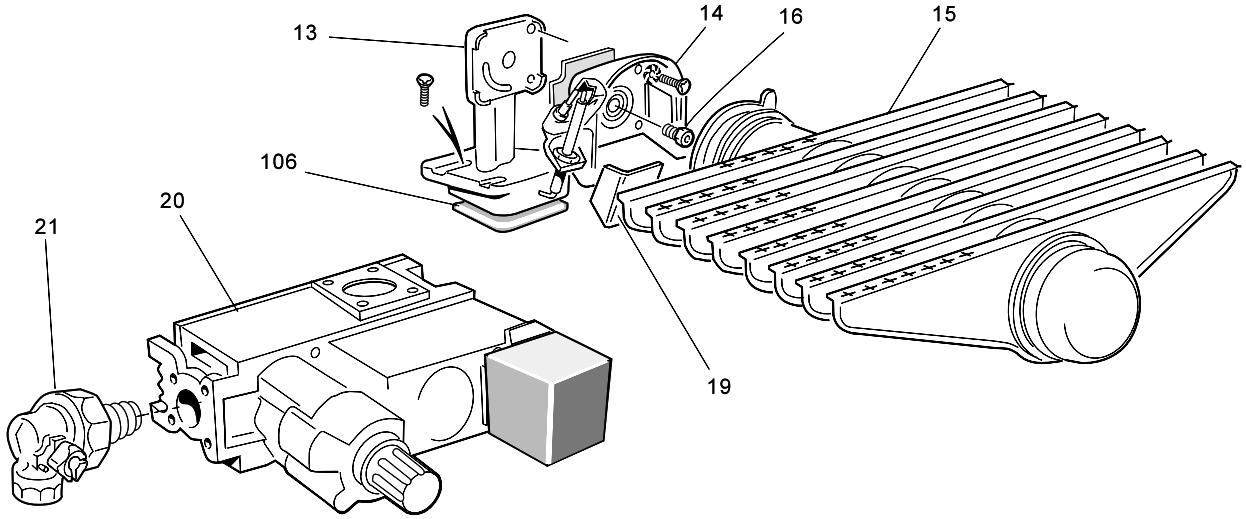

LEGEND (Numbers up to 44 relate to B.G. spares list)

13. Burner manifold.
14. Air box & pilot burner assy.
15. Main burner.
16. Main burner injector.
19. Pilot burner shield.
20. Gas control valve.
21. Gas service cock.
106. Sealing gasket

SHORT LIST OF PARTS

The following list is comprised of parts commonly required as replacement components due to damage/expendability. Their failure or absence is likely to affect safety or performance.

The list is extracted from the British Gas List of Parts, which contains all available spare parts.

The full list is held by British Gas, **CaradonPlumbing Limited** distributors and merchants.

Classic LXRS/RS 245 P & 255 P Propane Gas Boilers

When ordering spares please quote:-

1. Boiler model
2. Appliance G.C. number
3. Description
4. Quantity.
5. Product No.

Key No.	G.C. Part No.	Description	Qty.	Product No.
11	308 365	Sightglass assembly kit	1	079 602
15		Main burner AEROMATIC No. AC 19/123 295 with internal gauze (RS 255 P) AEROMATIC No. AC 19/123 296 with internal gauze (RS 245 P)		
16		Main burner injector		
	398 054	BRAY Cat. AB 1907 'special'; RS 245 P	1	004 980
		BRAY Cat. 10 - size 600; RS 255 P	1	--
17	386 131	Pilot burner injector HONEYWELL 4580 10 75 - 003 (stamped 20 / 23 P)	1	--
18	308 358	Pilot burner HONEYWELL Q359 A 1124	1	079 599
20	379 920	Gas control valve HONEYWELL V 4600 E, 230 V	1	111 074
22	395 705	Piezo unit, VERNITRON 60080 / 002	1	003 939
23	308 549	Ignition electrode. Morgan Matroc 410 lg.	1	111 881
24	391 519	Thermocouple, HONEYWELL Q 309 A 3299, 600mm lg.	1	111 880
25	308 521	Control box, including thermostat, thermostat knob	1	111 974
26	386 139	Thermostat, RANCO K 36 - L 1016 with 48" capillary	1	113 193
27	308 012	Thermostat knob	1	013 909
30	308 523	Boiler casing assembly - white stove enamel, with sightglass and foil insulation (Standard model only).	1	111 983
31	308 524	Controls casing door - white plastic, with Lighting Instructions (Standard model only).	1	079 937
34	308 329	Boiler sealing pack	1	079 594
39	308 507	Overheat thermostat, RANCO LM 7 - P 5054 (sealed systems only)	1	100 787
40	-	Boiler casing assembly - white stove enamel with sightglass and foil insulation (Deluxe model only).	1	112 731
41	-	Glass fascia (Deluxe model only).	1	112 733
42	-	Plastic fascia trim (Deluxe model only) - beige.	2	138 251
43	-	Plastic fascia trim (Deluxe model only) - white.	2	138 406
44	-	Controls casing bottom panel	1	138 267

56 SHORT PARTS

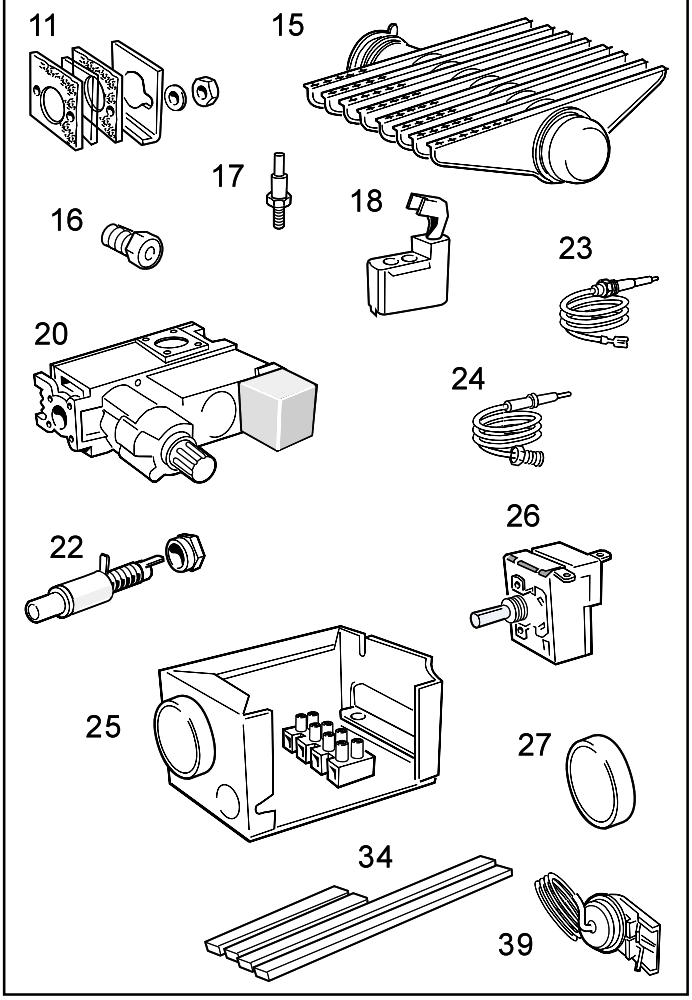

57 BOILER CASING ASSEMBLY

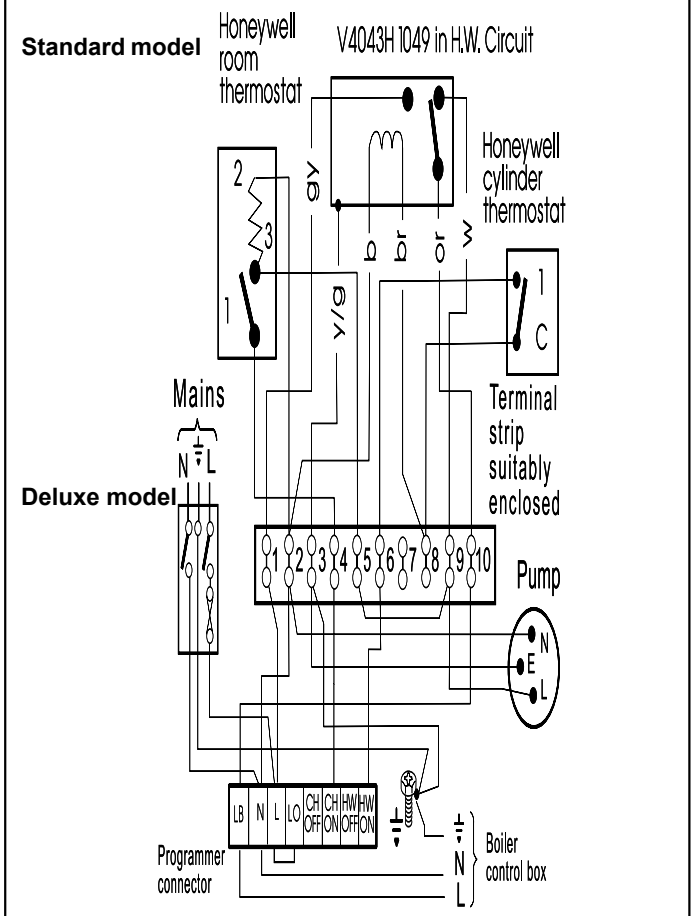

benchmark™

The code of practice for the installation, commissioning & servicing of central heating systems

Technical Training

The Caradon Plumbing Limited Technical Training Centre offers a series of first class training courses for domestic, commercial and industrial heating installers, engineers and system specifiers.

For details of courses please ring: *01270 413624*

CE

LXFF.87/AQ/220
LXRS.87/AQ/221
FF.87/AP/107
RS.87/AP/108

Propane Gas appliances are service listed by British Gas

CERTIFIED TO BRITISH STANDARDS BS6332 BS5258

THIS SYMBOL IS YOUR ASSURANCE OF QUALITY

These appliances are designed for use with Natural Gas only. They have been tested and conform with the provisions of BS. 6332 and BS. 5258.

CERTIFIED PRODUCT
Manufactured under a BS EN ISO 9001:1994 Quality System accepted by BSI.

Caradon Plumbing Limited pursues a policy of continuing improvement in the design and performance of its products. The right is therefore reserved to vary specification without notice.

September 1999 UIN 112 560 A04

Caradon Plumbing Limited, P.O. Box 103, National Ave, Kingston upon Hull, HU5 4JN. Telephone: 01482 492 251 Fax: 01482 448 858. Registration No. London 322 137. Registered Office: National Avenue, Kingston upon Hull, HU5 4JN. *A subsidiary of Caradon p.l.c*

Ideal BOILERS

Ideal Installer/Technical Helpline: 01482 498663