installation and servicing

classic

Your Idealinstallation and servicing guide

m3050
m5080

When replacing any part on this appliance, use only spare parts that you can be assured conform to the safety and performance specification that we require. Do not use reconditioned or copy parts that have not been clearly authorised by Ideal Boilers.

Ideal BOILERS

ENGINEERED FOR PEACE OF MIND

GENERAL

Table 1 - Boiler Data

Boiler Size			m30-50	m50-80
Gas supply type and connection			2H-G20-20mbar Rc 1/2 (1/2" BSP Female)	
Injector size			Stereomatic 5.4mm dia.	
Flow connection			22mm copper	
Return connection			22mm copper	
Maximum static water head		m (ft.)	30.5 (100)	
Minimum static water head		m (ft.)	0.45 (1.5)	
Electrical supply			230 V ~ 50 Hz	
Boiler power consumption			38W	
Fuse rating			External: 3A	Internal: F3.15A TL 250V
Water content		litre (gal.)	3.65 (0.8)	
Dry Weight		kg (lb.)	43 (95)	
Boiler size	Height	mm (in.)	580 (23)	
	Width	mm (in.)	390 (15)	
	Depth	mm (in.)	278 (11)	
Flue terminal diameter		mm (in.)	100 (4)	

Table 2 - Performance Data

Boiler Size			**m30-50**		**m50-80**	
Input			**Min**	**Max**	**Min**	**Max**
Boiler input 'Q' =	Nett	kW	9.7	16.2	15.8	26.2
	CV	Btu/h	33 100	55 300	54 000	89 500
Boiler input 'Q' =	Gross	kW	10.7	18.0	17.5	29.1
	CV	Btu/h	36 700	61 400	59 900	99 400
	Gas consumption	l/s (cu.ft/h)	0.27 (35.4)	0.46 (59.1)	0.45 (57.7)	0.75 (95.7)
Boiler output 'P' =	70 °C Mean water	kW	8.8	14.7	14.7	23.4
	temperature	Btu/h	30 000	50 000	50 000	80 000
Seasonal efficiency (SEDBUK) *			Band D [78.8]%		Band D [78.6]%	
Nox classification			class 4			

***** The value is used in the UK Government's Standard Assessment Procedure (SAP) for energy rating of dwellings.
The test data from which it has been calculated have been certified by a notified body.

Note.
Gas consumption is calculated using a calorific value of 38.7 MJ/m³ (1038 Btu/ft³) gross or 34.9 MJ/m³ (935 Btu/ft³) nett. To obtain the gas consumption at a different calorific value:-

a. *For l/s - divide the gross heat input (kW) by the gross C.V. of the gas (MJ/m³)*

b. *For ft³/h - divide the gross heat input (Btu/h) by the gross C.V. of the gas (Btu/ft³)*

Key to symbols

GB = United Kingdom **IE** = Ireland (Countries of destination)

PMS = Maximum operating pressure of water

$C_{13}C_{33}C_{53}$ = A room sealed appliance designed for connection via ducts to a horizontal terminal which admits fresh air to the burner and discharges the products of combustion to the outside through orifices which, in this case, are concentric. The fan is up stream of the combustion chamber.

I_{2H} = An appliance designed for use on 2nd Family gas, Group H only.

CAUTION. To avoid the possibility of injury during the installation, servicing or cleaning of this appliance, care should be taken when handling edges of sheet steel components.

classic m Natural Gas only

m3050 ..... **G.C. Appliance No. 41 391 50**
m5080 ..... **G.C. Appliance No. 41 391 51**

PI No. 0063BL9812

Destination Countries: UK, IE

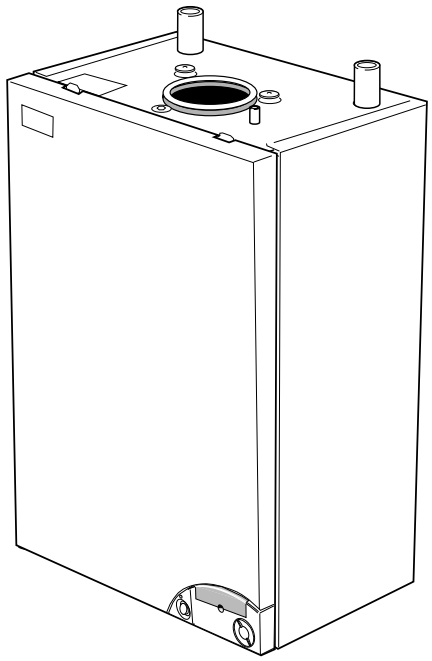

BENCHMARK LOG BOOK DETAILS

Boiler	**Page**
Make and model	3
Appliance Serial No. on Data Badge	12
Controls	as applicable
For all boilers	
Flushing to BS.7593	11
Inhibitor	11
Gas inlet working pressure	6
Burner operating pressure	2
Heat input	to be calculated
Temperature differential	measure and record
For combination boilers only	Not applicable
For domestic hot water mode	Not applicable
For condensing boilers	Not applicable

For all boilers: *complete, sign & hand over to customer*

For assistance see Technical Helpline number on the back page

CONTENTS

Air Supply 6
Boiler Clearances 4
Boiler Exploded Diagram 12
Electrical Connections 19
Electrical Supply 7
Extension Ducts - Fitting 17
Fault Finding 37
Flow Wiring Diagram 22
Flue Fitting 15
Flue Installation 6
Gas Safety Regulations 5
Gas Supply 6
Installation 12
Mandatory Requirements 5
Pump 8
Servicing 25
Short List of Parts 40
Terminal 6
Thermostatic Radiator valves 7
Water and Systems 8-9
Water Connections 19
Water Treatment 11
Wiring Diagrams 20

NOTE TO THE INSTALLER: LEAVE THESE INSTRUCTIONS ADJACENT TO THE GAS METER. ALSO COMPLETE THE BENCHMARK LOG BOOK AND GIVE THIS TO THE CUSTOMER.

benchmark™

1 BOILER WATER CONNECTIONS

The boiler flow and return pipes are supplied fitted to the boiler ready for top connection

Notes.

a. *For the heating loads in excess of 60, 000 Btu/hr boilers, 28mm (1") flow and return pipes should be used to and from the boiler.*

b. *This appliance is NOT suitable for use with a direct hot water cylinder.*

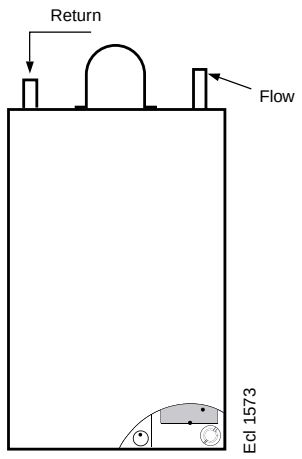

2 BOILER CLEARANCES *all dimensions in mm (in.)*

The following minimum clearances must be maintained for operation and servicing.

Additional space will be required for installation, depending upon site conditions.

Side and Rear Flue

a Provided that the flue hole is cut accurately, e.g. with a core drill, the flue can be installed from inside the building where wall thicknesses do not exceed 600mm (24"). Where the space into which the boiler is going to be installed is less than the length of flue required the flue must be fitted from the outside.

Installation from inside ONLY

b. If a core boring tool is to be used inside the building the space in which the boiler is to be installed must be at least wide enough to accommodate the tool.

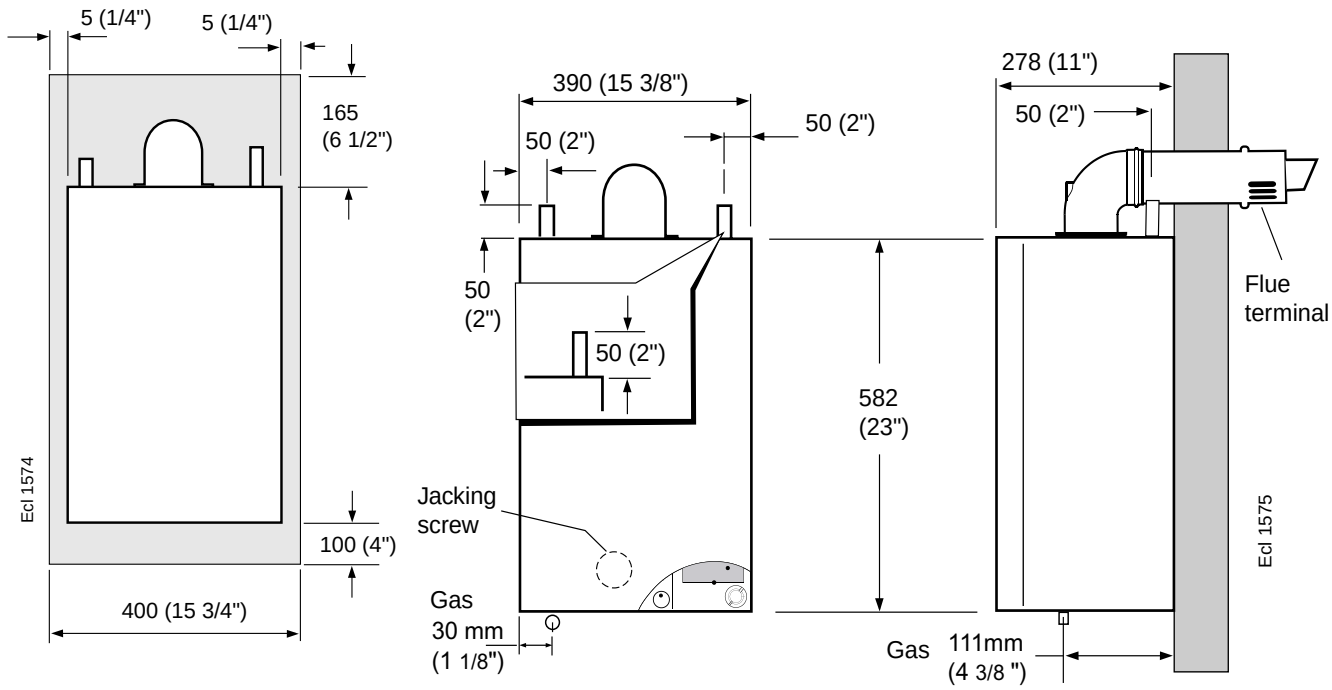

Front clearance

The minimum front clearance when built in to a cupboard is 5mm (1/4") from the cupboard door but 450mm (17 3/4") overall clearance is still required, with the cupboard door open, to allow for servicing.

*** Bottom clearance**

Bottom clearance after installation can be reduced to 5mm. However, 100mm must be available for servicing.

INTRODUCTION

The classic m boiler is a fully automatically controlled, wall mounted, low water content, fan flued, non condensing gas boiler. It has full modulating central heating outputs of 8.8 kW (30,000 Btu/h) to 14.7 kW (50,000 Btu/h) and 14.7Kw (50 000 Btu/h) to 23.4Kw (80 000 Btu/h)

The boiler casing is of white painted mild steel with user controls capable of being mounted remotely from the boiler, if the option is required.

The heat exchanger is cast iron.

Note. *These boilers cannot be used on systems which include gravity circulation.*

The boilers are suitable for connection to fully pumped, open vented or sealed water systems. Adequate arrangements for completely draining the system by provision of drain cocks MUST be provided in the installation pipework.

OPERATION

When there is a demand for heat, the heating system is supplied selected temperature of between 65°C and 82°C.

The boiler features a comprehensive diagnostic system which gives detailed information on the boiler status when operating and performance of key components to aid commissioning and fault finding.

OPTIONAL EXTRA KITS

- **D Pack Flue Extension Ducts** (1000mm long)
- **Flue Finishing Kit**
- **90° Elbow Kit** (Maximum 2 per installation)
- **45° Elbow Kit** (Maximum 2 per installation)
- **Roof flue Kit**
- **Powered Vertical Flue Kit**
- **Remote User Controls Kit**
- **Boiler Stand-off Kit**

SAFETY

Current Gas Safety (Installation and Use) Regulations or rules in force.

It is law that all gas appliances are installed and serviced by a CORGI registered installer in accordance with the above regulations. Failure to install appliances correctly could lead to prosecution. It is in your own interest, and that of safety, to ensure the law is complied with.

The installation of the boiler MUST also be in accordance with the latest I.E.E (BS 7671) Wiring Regulations, local building regulations, bye-laws of the local water authority, the building regulations and the Building Standards (Scotland) and any relevant requirements of the local authority.

Detailed recommendations are contained in the following British Standard Codes of Practice:

BS. 5440:1 Flues (for gas appliances of rated input not exceeding 70 kW).

BS. 5440:2 Ventilation (for gas appliances of rated input not exceeding 70 kW).

BS. 5449 Forced circulation hot water systems.

BS. 5546 Installation of gas hot water supplies for domestic purposes (2nd Family Gases).

BS. 6798 Installation of gas fired hot water boilers of rated input not exceeding 60 kW.

BS. 6891 Low pressure installation pipes.

Health & Safety Document No. 635

The Electricity at Work Regulations, 1989.

The manufacturer's notes must NOT be taken, in any way, as overriding statutory obligations.

IMPORTANT. These appliances are CE certificated for safety and performance. It is, therefore, important that no external control devices, e.g. flue dampers, economisers etc., are directly connected to these appliances unless covered by these Installation and Servicing Instructions or as otherwise recommended by **Caradon Plumbing Limited** in writing. If in doubt please enquire.

Any direct connection of a control device not approved by **Caradon Plumbing Ltd.** could invalidate the certification and the normal appliance warranty. It could also infringe the Gas Safety Regulations and the above regulations.

SAFE HANDLING OF SUBSTANCES

Care should be taken when handling the boiler insulation panels, which can cause irritation to the skin. No asbestos, mercury or CFCs are included in any part of the boiler or its manufacture.

LOCATION OF BOILER

The boiler must be installed on a flat and vertical wall, capable of adequately supporting the weight of the boiler and any ancillary equipment.

The boiler may be fitted on a combustible wall and insulation between the wall and the boiler is not necessary, unless required by the local authority.

For electrical safety reasons there must be no access from the back of the boiler.

The boiler must not be fitted outside.

Timber Framed Buildings

If the boiler is to be fitted in a timber framed building it should be fitted in accordance with the British Gas publication 'Guide for Gas Installations in Timber Frame Housing', reference IGE/UP/7:1998.

Compartment Installations

A compartment used to enclose the boiler should be designed and constructed specially for this purpose.
An existing cupboard or compartment may be used, provided that it is modified for the purpose.

In both cases details of essential features of cupboard / compartment design, including airing cupboard installation, are to conform to the following:

- BS. 6798. (**No** cupboard ventilation is required - see “Air Supply” for details).
- The position selected for installation MUST allow adequate space for servicing in front of the boiler.
- For the minimum clearances required for safety and subsequent service, see the wall mounting template and Frame 2. In addition, sufficient space may be required to allow lifting access to the wall mounting plate.

GAS SUPPLY

The local gas supplier should be consulted, at the installation planning stage, in order to establish the availability of an adequate supply of gas. An existing service pipe must NOT be used without prior consultation with the local gas supplier. The boiler must installed on a gas supply with a governed meter only.

A gas meter can only be connected by the local gas supplier or by a registered CORGI engineer.

An existing meter should be checked, preferably by the gas supplier, to ensure that the meter is adequate to deal with the rate of gas supply required. A working gas pressure of 20 mbar should be available at the boiler inlet.

IMPORTANT.

Installation pipes MUST be fitted in accordance with BS. 6891. Pipework from the meter to the boiler MUST be of an adequate size, i.e. not less than 15mm O.D.

The complete installation MUST be tested for gas soundness and purged as described in the above code.

FLUE INSTALLATION

The flue must be installed in accordance with the recommendations of BS. 5440: Part 1.

The following notes are intended for general guidance.

1. The boiler MUST be installed so that the terminal is exposed to external air.
2. It is important that the position of the terminal allows the free passage of air across it at all times.
3. Minimum acceptable spacing from the terminal to obstructions and ventilation openings are specified in Table 3.
4. Where the lowest part of the terminal is fitted less than 2m (6'6") above a balcony, above ground or above a flat roof to which people have access, then the terminal MUST be protected by a purpose designed guard.

   Ensure that the guard is fitted centrally.
5. Where the terminal is fitted within 850mm (34") of a plastic or painted gutter or 450mm (18") of painted eaves then an aluminium shield at least 750mm (30") long should be fitted centrally to the underside of the gutter or painted surface.
6. The air inlet/products outlet duct and the terminal of the boiler MUST NOT be closer than 25mm (1") to combustible material. Detailed recommendations on the protection of combustible material are given in BS. 5440: 2000.

Table 3 - Balanced flue terminal position

Terminal Position	Minimum Spacing
1. Directly below or alongside an opening window, air vent or other ventilation opening	300 mm (12")
2. Below guttering, drain pipes or soil pipes	75 mm (3")
3. Below eaves	200 mm (8")
4. Below balconies or a car port roof	200 mm (8")
5. From vertical drain pipes or soil pipes	75 mm (3")
6. From internal or external corners	300mm (12")
7. Above adjacent ground, roof or balcony level	300 mm (12")
8. From a surface facing the terminal	600 mm (24")
9. From a terminal facing a terminal	1200 mm (48")
10. From an opening in a car port (e.g. door or window) into dwelling	1200 mm (48")
11. Vertically from a terminal on the same wall	1500 mm (60")
12. Horizontally from a terminal on the wall	300 mm (12")

IMPORTANT. It is absolutely ESSENTIAL to ensure, in practice, that products of combustion discharging from the terminal cannot re-enter the building or any other adjacent building through ventilators, windows, doors, other sources of natural air infiltration, or forced ventilation / air conditioning.

If this should occur the appliance MUST be turned OFF, labelled as 'unsafe' until corrective action taken.

TERMINAL

The terminal assembly can be adapted to accommodate various wall thicknesses. Refer to Frame 11 - Unpacking.

AIR SUPPLY

It is NOT necessary to have a purpose-provided air vent in the room or internal space in which the boiler is installed. Neither is it necessary to ventilate a cupboard or compartment in which the boiler is installed, due to the low surface temperatures of the boiler casing during operation; therefore the requirements of BS 6798, Clause 12, and BS 5440:2 may be disregarded.

WATER CIRCULATION SYSTEM

For the types of system and correct piping procedure see Frames 1, and 3 to 8.

The central heating system should be in accordance with BS. 6798 and, in addition, for smallbore and microbore systems, BS. 5449.

WATER TREATMENT - see Frame 9

The hot water storage cylinder MUST be of the indirect type and should preferably be manufactured of copper.

Single feed, indirect cylinders are not recommended and MUST NOT be used on sealed systems.

The appliances are NOT suitable for gravity central heating nor are they suitable for the provision of gravity domestic hot water.

The hot water cylinder and ancillary pipework, not forming part of the useful heating surface, should be lagged to prevent heat loss and any possible freezing - particularly where pipes run through roof spaces and ventilated underfloor spaces.

The boiler must be vented.

The hydraulic resistance of the boilers, at MAXIMUM OUTPUT, with an 11 °C (20 °F) temperature differential, is shown in Graph 1.

Graph 1 - Water flow rate and pressure loss

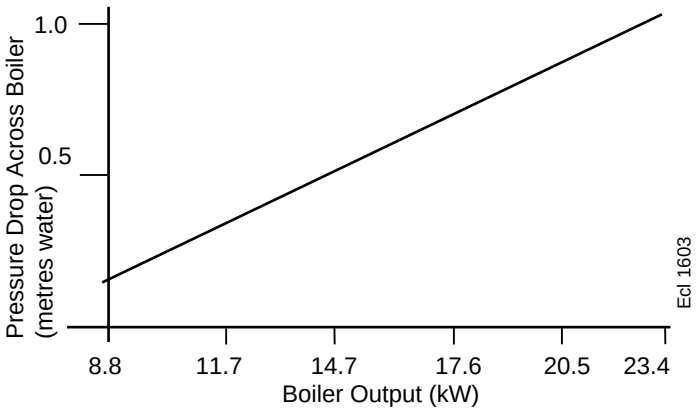

THERMOSTATIC RADIATOR VALVES (TRV)

Caradon Plumbing Ltd. recommend that heating systems utilising full thermostatic radiator valve control of temperature in individual rooms should also be fitted with a room thermostat controlling the temperature in a space served by radiators not fitted with such a valve as stated in BS. 5449.

For further information refer to the 'Good Practice Guide 143', publication of the Energy Efficiency Office, available from the Building Research Establishment, Garston, Watford WD2 7JR. Tel: 01923 664 258

ELECTRICAL SUPPLY

Wiring external to the appliance MUST be in accordance with the current I.E.E. (BS.7671) Wiring Regulations and any local regulations which apply.

The point of connection to the mains should be readily accessible and adjacent to the boiler.

3 OPEN VENT SYSTEM REQUIREMENTS

The system should be vented directly off the boiler flow pipe, as close to the boiler as possible. The cold feed entry should be inverted and MUST be positioned between the pump and the vent, and not more than 150mm (6") away from the vent connection.

Note. *Combined feed and vent pipes may also be fitted.*

There should be a minimum height, 450mm (18"), of open vent above the cistern water level. If this is not possible refer to Frame 5. The vertical distance between the highest point of the system and the feed/expansion cistern water level MUST not be less than 450 mm (18"). The pump must be fitted on the flow side of the boiler.

A suitable pump is a domestic circulator capable of providing a maximum 11°C (20°F) temperature differential across the boiler with the whole of the heating circuit open (e.g. Grundfos UPS 15/50, 15/60 or equivalent). With the minimum flow circuit allowed by the controls the differential must not exceed 25 °C.

The vertical distance between the pump and feed/expansion cistern MUST comply with the pump manufacturer's minimum requirements, to avoid cavitation. Should these conditions not apply either lower the pump position or raise the cistern above the minimum requirement specified by **Caradon Plumbing Ltd.** The isolation valves should be fitted as close to the pump as possible.

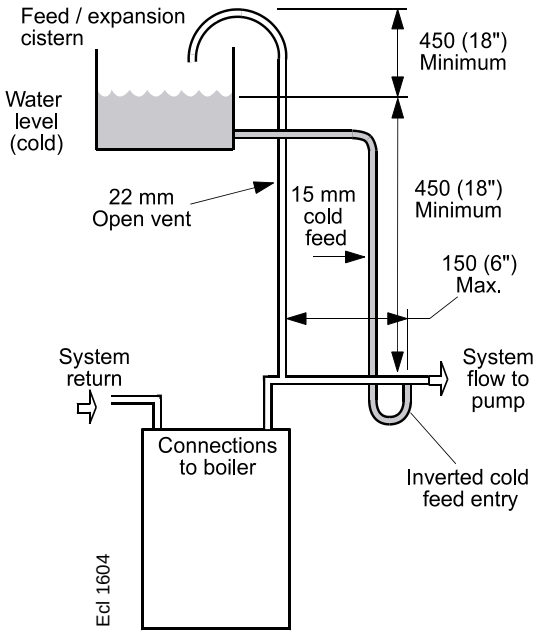

4 SCHEMATIC PIPEWORK AND SYSTEM BALANCING

The boiler does not normally need a bypass but at least some radiators on the heating circuit, of load at least 10% of the minimum boiler output, must be provided with twin lockshield valves so that this minimum heating load is always available (see footnote re. thermostatic radiator valves).

Balancing

1. Set the programmer to ON for both CH and HW. Turn the cylinder thermostat down. Close the manual or thermostatic valves on all radiators, leaving the twin lockshield valves (on the radiators referred to above) in the open position. Turn up the room thermostat and adjust these lockshield valves to give boiler flow and return temperatures not more than 20 °C apart. These valves should now be left as set.
2. Open all manual or thermostatic radiator valves and adjust the lockshield valves on remaining radiators to give around 11°C temperature drop at each radiator.
3. Turn up the cylinder thermostat and adjust the cylinder balancing valve so that the cylinder achieves a maximum flow consistent with adequate flow to the radiators. Check that with only the domestic hot water loop in circuit a differential temperature of 20 °C across the boiler is not exceeded.
4. Adjust room and cylinder thermostats and programmer to NORMAL settings.

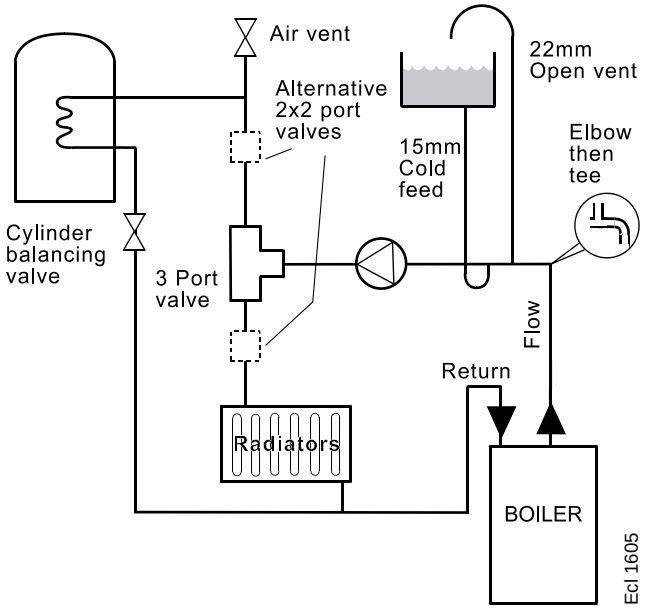

Note.
Systems incorporating zone valves which could completely shut off the flow through the system, must be wired such that the boiler will not fire or continue to fire when this occurs.

5 LOW HEAD AND LARGE SYSTEMS WITH EXTENSIVE PIPE RUNS - OPEN VENT

This arrangement is useful for large systems where radiators at the extremities are difficult to vent. This can lead to pumping over with conventional feed and vent arrangements.

The following conditions MUST be observed:

1. The top of the automatic air vent must be below the cold water level.
2. The static water level (cold) must be at least 200mm above the top of the horizontal flow pipe, fitted as shown. The vent connection MUST NOT be made immediately off the top of the boiler as venting is made less efficient.
3. The maximum practical length of 22mm cold feed pipe should be used in order to reduce the effective volume of hot system water expanding into the feed/ expansion cistern to a minimum.

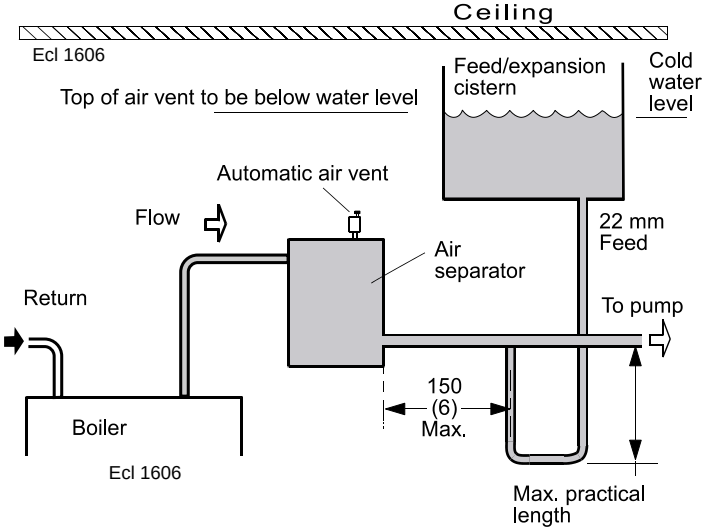

All dimensions in mm (in.).
NB. Imperial dimensions are approximate

Note. *The pump manufacturers' minimum requirements must be complied with.*

6 SEALED SYSTEM REQUIREMENTS

Note. The *method of filling, refilling, topping up or flushing sealed primary hot water circuit from the mains via a temporary hose connection is only allowed if acceptable to the local water authority.*

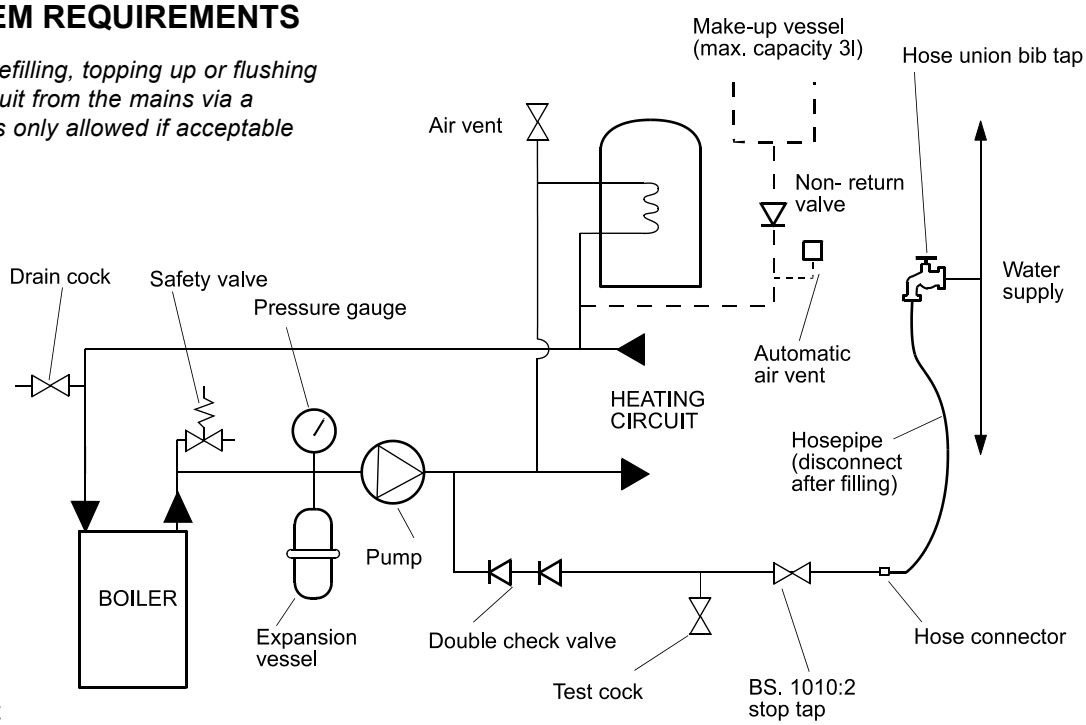

1. **General**
   - **a.** The installation must comply with the requirements of BS. 6798 and BS. 5449.
   - **b.** The installation should be designed to work with flow temperatures of up to 82° C.
   - **c.** All components of the system, including the heat exchanger of the indirect cylinder, must be suitable for a working pressure of 3 bar (45lb/in^2) and temperature of 110°C. Care should be taken in making all connections so that the risk of leakage is minimised.

2. **Safety Valve**

   A spring loaded safety valve complying with the relevant requirements of BS. 6759 must be fitted in the flow pipe as close to the boiler as possible and with no intervening valve or restriction. The valve should have the following features:

   - **a.** A non-adjustable preset lift pressure not exceeding 3bar (45lb/in^2).
   - **b.** A manual testing device.
   - **c.** Provision for connection of a discharge pipe. *The valve or discharge pipe should be positioned so that the discharge of water or steam cannot create a hazard to the occupants of the premises or cause damage to electrical components and wiring.*

3. **Pressure Gauge**

   A pressure gauge covering at least the range 0-4 bar (0-60 lb/in^2) must be fitted to the system. The gauge should be easily seen from the filling point and should preferably be connected at the same point as the expansion vessel.

7 SEALED SYSTEM REQUIREMENTS - *continued*

4. Expansion Vessel

a. A diaphragm type expansion vessel must be connected to a point close to the inlet side of the pump, the connecting pipe being not less than 15 mm (1/2" nominal) size and not incorporating valves of any sort.

b. The vessel capacity must be adequate to accept the expansion of the system water when heated to 110° C (230° F).

c. The charge pressure must not be less than the static water head above the vessel. The pressure attained in the system when heated to 110° C (230° F) should be at least 0.35 bar (5 lb/in^2) less than the lift pressure of the safety valve.
For guidance on vessel sizing refer to the table in Frame 8.

For further details refer to BS. 5449, BS. 7074:1 and the British Gas Corporation publication 'Material and Installation Specifications for Domestic Central Heating and Hot Water'.

5. Cylinder

The cylinder must be either of the indirect coil type or a direct cylinder fitted with an immersion calorifier which is suitable for operating on a gauge pressure of 0.35 bar (5 lb/in^2) in excess of the safety valve setting. Single feed indirect cylinders are not suitable for sealed systems.

6. Make-up Water

Provision must be made for replacing water loss from the system, either:

a. From a manually filled make-up vessel with a readily visible water level. The vessel should be mounted at least 150 mm (6") above the highest point of the system, and be connected through a non-return valve to the system, fitted at least 300 mm (12") below the make-up vessel on the return side of the domestic hot water cylinder or radiators.

or

b. Where access to a make-up vessel would be difficult by pre-pressurisation of the system. Refer to 'Filling', below.

7. Mains Connection

There must be no direct connection to the mains water supply or to the water storage tank supplying domestic water, even through a non-return valve, without the approval of the local water authority.

8. Filling

The system may be filled by one of the following methods:

a. Through a cistern, used for no other purposes, via a ball valve permanently connected directly to a service pipe and/or a cold water distributing pipe. The static head available from the cistern should be adequate to provide the desired initial system design pressure. The cold feed pipe from the cistern should include a non-return valve and a stop valve with an automatic air vent connected between them, the stop valve being located between the system and the automatic air vent. The stop valve may remain open during normal operation of the system if automatic water make-up is required.

b. Through a self-contained unit comprising a cistern, pressure booster pump (if required) and, if necessary, an automatic pressure reducing valve and flow restrictor. The cistern should be supplied through a temporary connection from a service pipe or cold water distributing pipe.
This unit may remain permanently connected to the heating system to provide limited automatic water make-up. Where the temporary connection is supplied from a service pipe or distributing pipe which also supplies other draw-off points at a lower level then a double check valve shall be installed upstream of the draw-off point.

c. Through a temporary hose connection from a draw-off tap supplied from a service pipe under mains pressure. Where the mains pressure is excessive a pressure reducing valve shall be used to facilitate filling.

The following fittings shall form a permanent part of the system and shall be fitted in the order stated:

A stop valve complying with the requirements of BS. 1010, Part 2 (the hose from the draw-off tap shall be connected to this fitting).
A test cock.
A double check valve of an approved type.

- Thoroughly flush out the whole of the system with cold water, without the pump in position.
- With the pump fitted, fill and vent the system until the pressure gauge registers 1.5 bar (21.5lb/in^2). Examine for leaks.
- Check the operation of the safety valve by manually raising the water pressure until the valve lifts. This should occur within ± 0.3 bar (± 4.3lb/in^2) of the pre-set lift pressure.
- Release water from the system until the initial system design pressure is reached.
- Light the boiler and heat the system to the maximum working temperature. Examine for leaks.
- Turn off the boiler and drain the system while still hot.
- Refill and vent the system.
- Adjust the initial pressure to the required value.

Sizing procedure for expansion vessels: The volume of the expansion vessel (litres) fitted to a sealed system shall not be less than that given by the table on the following page, multiplied by a factor of 0.8 (for flow temperatures of less than 83 °C).

8 SEALED SYSTEM REQUIREMENTS - *continued*

Safety valve setting	3.0 bar			2.5 bar			2.0 bar	
Vessel charge and initial system pressure	0.5 bar	1.0 bar	1.5 bar	0.5 bar	1.0 bar	1.5 bar	0.5 bar	1.0 bar
Total water content of system	Expansion vessel volume litres							
25 litres	2.1	2.7	3.9	2.3	3.3	5.9	2.8	5.0
50	4.2	5.4	7.8	4.7	6.7	11.8	5.6	10.0
75	6.3	8.2	11.7	7.0	10.0	17.7	8.4	15.0
100	8.3	10.9	15.6	9.4	13.4	23.7	11.3	20.0
125	10.4	13.6	19.5	11.7	16.7	29.6	14.1	25.0
150	12.5	16.3	23.4	14.1	20.1	35.5	16.9	30.0
175	14.6	19.1	27.3	16.4	23.4	41.4	19.7	35.0
200	16.7	21.8	31.2	18.8	26.8	47.4	22.6	40.0
225	18.7	24.5	35.1	21.1	30.1	53.3	25.4	45.0
250	20.8	27.2	39.0	23.5	33.5	59.2	28.2	50.0
275	22.9	30.0	42.9	25.8	36.8	65.1	31.0	55.0
300	25.0	32.7	46.8	28.2	40.2	71.1	33.9	60.0
Multiplying factors for other system volumes	0.0833	0.109	0.156	0.094	0.134	0.237	0.113	0.20

9 WATER TREATMENT

The classic m boiler has a cast iron heat exchanger

IMPORTANT.
The application of any other treatment to this product may render the guarantee of Caradon Plumbing invalid.

If water treatment is used **Caradon Plumbing Ltd.** recommend only the use of FERNOX or SENTINEL water treatment products, which must be used in accordance with the manufacturers' instructions. For further information contact:

Fernox Manufacturing Co. Ltd.
Tandem House
Marlowe Way
Croydon
Surrey CRO 4XS
Tel: 0870 5601 5000

Sentinel Division
Betz Dearborn Ltd.
Widnes
Cheshire
WA8 8UD
Tel: 0151 424 5351

Notes.

1. It is most important that the correct concentration of the water treatment product is maintained in accordance with the manufacturers' instructions.
2. If the boiler is installed in an existing system any unsuitable additives *MUST* be removed by thorough cleansing. BS. 7593:1992 details the steps necessary to clean a domestic central heating system.
3. In hard water areas, treatment to prevent lime scale may be necessary - however, the use of artificially softened water is *NOT* permitted.
4. Under no circumstances should the boiler be fired before the system has been thoroughly flushed.

10 BOILER ASSEMBLY - Exploded view

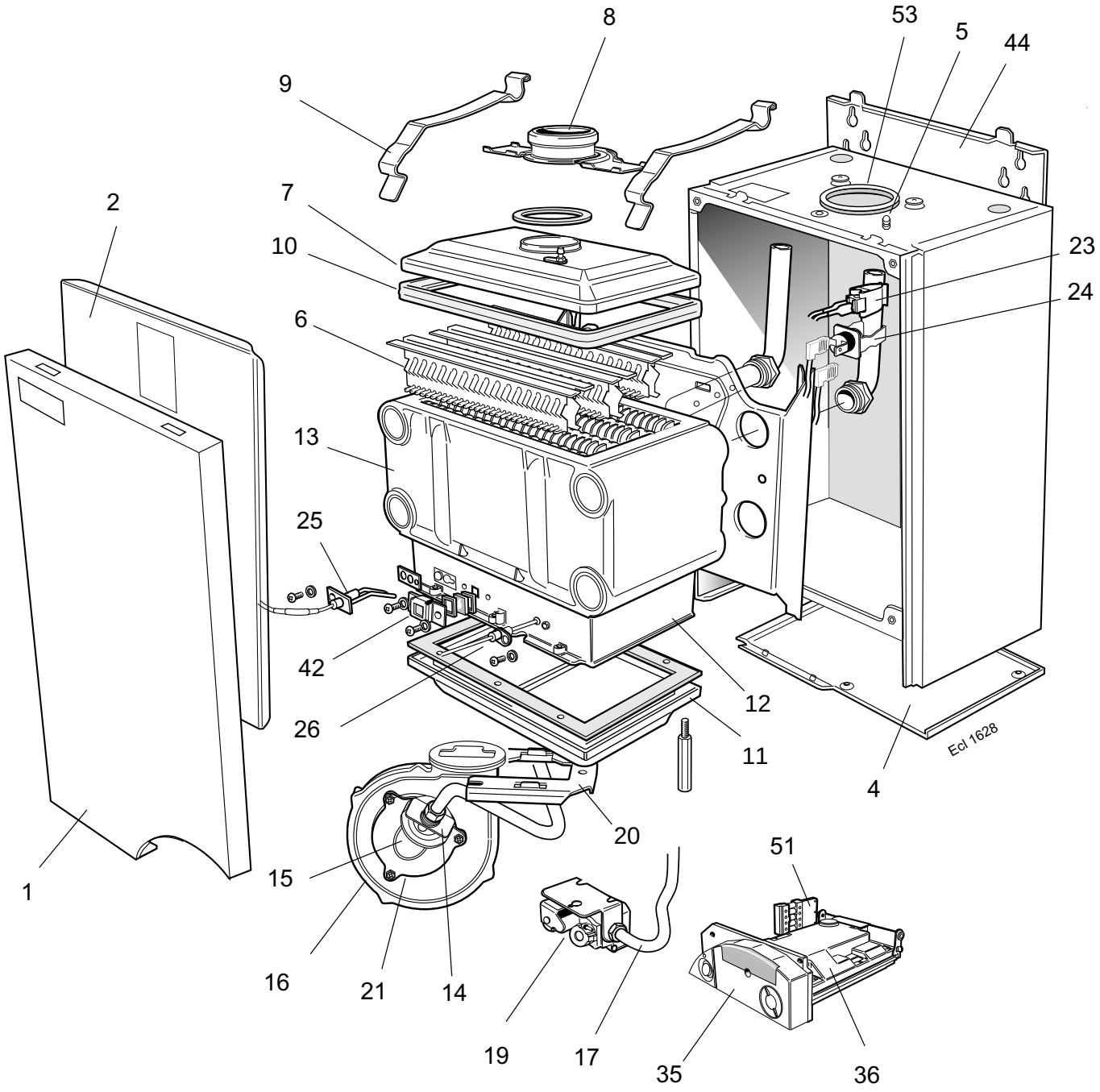

LEGEND

1. Front casing panel.
2. Case sealing panel.
4. Bottom cover panel.
5. Flue sensing nipple.
6. Flue baffle (5080 only).
7. Flue hood.
8. Flue connection.
9. Flue hood clip.
10. Flue hood seal.
11. Burner assy.
12. C/Cham Insulation.
13. Heat engine.
14. Injector & housing.
15. Venturi assy.
16. Fan assy.
17. Gas pipe assy.
19. Gas valve assy.
20. Fan bracket assy.
21. Orifice plate.
23. Control thermistor.
24. Overheat thermostat.
25. Igniton electrode.
26. Flame sensing electrode.
35. User control.
36. PCB - primary controls.
42. Sightglass.
44. Wall mtg. plate.
51. Mains connector.
53. Turret gasket .

11 UNPACKING

The boiler is supplied fully assembled in one Pack A, together with a standard flue assembly for lengths up to 460mm, rear or side flue outlet, in Pack B.

Optional extras if ordered are supplied in separate boxes.

Unpack and check the contents.

Pack A Contents
Also contained in Pack A:

- Hardware Pack (listed below).
- These Installation & Servicing Instructions.
- The User's Instructions.
- The User's control.
- Benchmark log book.

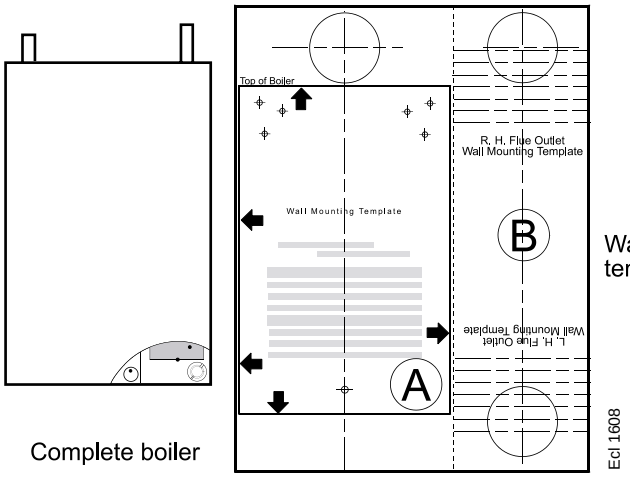

Complete boiler

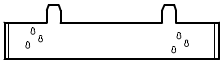

Wall mounting plate

Wall mounting template

Hardware Pack

- 50mm x No.10 wood screws - 3 off.
- Wall plugs (TP2B) - 3 off.
- Turret clamp.
- M5 x 10 pozi Hex screw.
- Mains connector.

Pack B Contents

- Flue turret.
- Flue terminal.
- Flue support cutting aid.

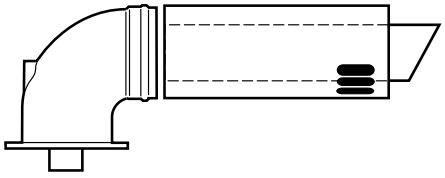

Flue turret assembly Flue terminal

12 PACKAGING REMOVAL

1. Ensure the boiler is stood correctly as marked on the carton.
2. Remove the strapping.
3. Fold back the top flaps to gain access to the wall mounting plate, instructions, user controls and hardware pack.
4. Remove instructions and read thoroughly before unpacking, user's controls and hardware pack and retain in safe place.
5. Lift off the cardboard carton.
6. Dispose of packaging.

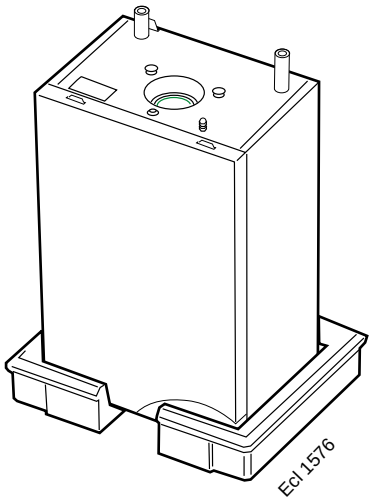

13 FRONT PANEL AND BOTTOM PANEL REMOVAL

1. Remove the 2 retaining screws.
2. Lift front panel and remove.
3. Remove the 2 bottom panel screws.
4. Allow the RHS of the bottom panel to lower slightly.
5. Withdraw the LHS of the bottom panel from the retaining clips.
6. Place bottom and front panel to one side to avoid damage.

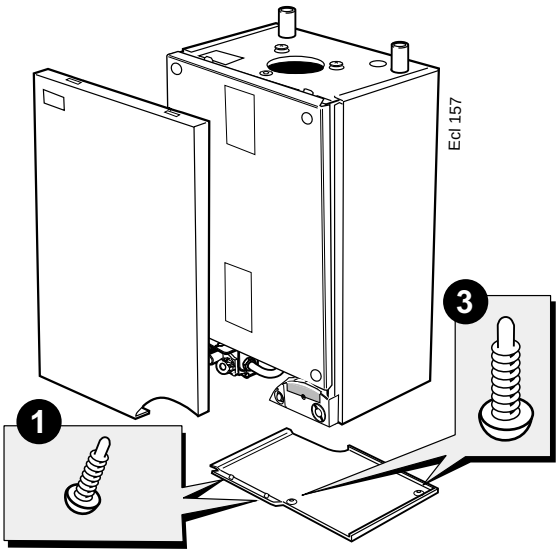

14 DETERMINING THE FLUE LENGTH AND FLUE PACKS REQUIRED

IMPORTANT.
The boiler MUST be installed in a vertical position

Dimension X - Wall thickness.

Dimension L - Wall thickness plus boiler spacing.

Dimension S - Stand-off frame depth = 33mm

FLUE KITS

Pack B - supplied as standard

Pack D - optional extension kit for side flue or rear flue outlet.

Refer to 'Flue Extension Ducts'

Total Flue length dimension		Flue
Rear flue dim. X+160	**Side flue flue dim. L+195**	**Extra packs required**
Up to 480 mm	Up to 480 mm	none
Up to 1430 mm	Up to 1430 mm	Pack D - 1 off
Up to 2380 mm	Up to 2380 mm	Pack D - 2 off
Up to 3000 mm	Up to 3000 mm	Pack D - 3 off

Note.
If the boiler is to be installed with downward routing of pipes then the optional stand-off kit can be used. Care must taken when cutting the ducts and marking the wall to suit this condition.

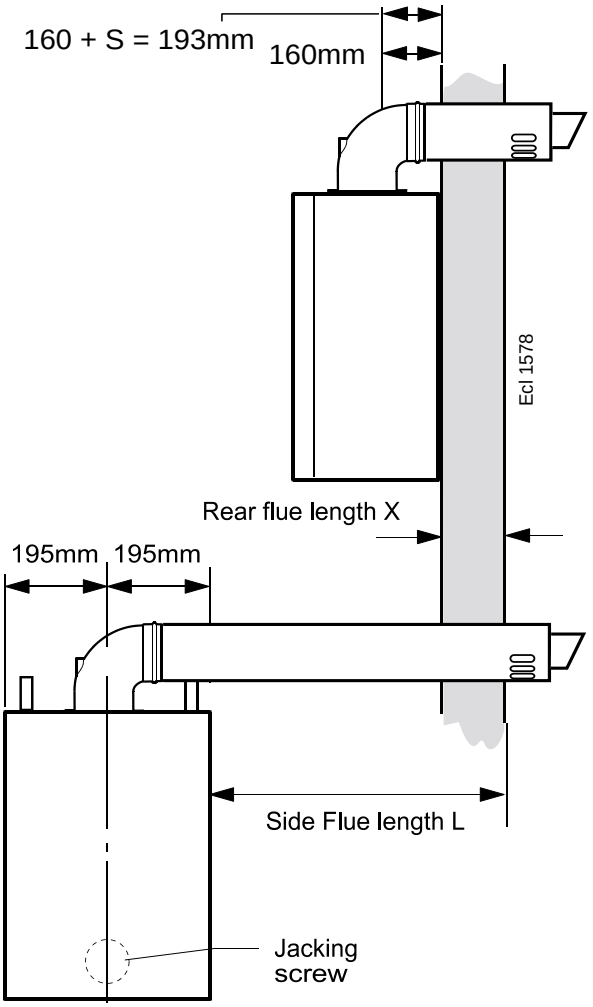

15 FLUE ASSEMBLY - Exploded View

1. An optional flue duct extension kit is required for wall thicknesses greater than :

   Side 300mm (11 3/4").

   Rear 345mm (13 1/2").

LEGEND

1. Duct assembly.
2. Flue Turret.
3. Turret gasket.
4. M5 x 10 pozi screw.
5. Turret clamp.

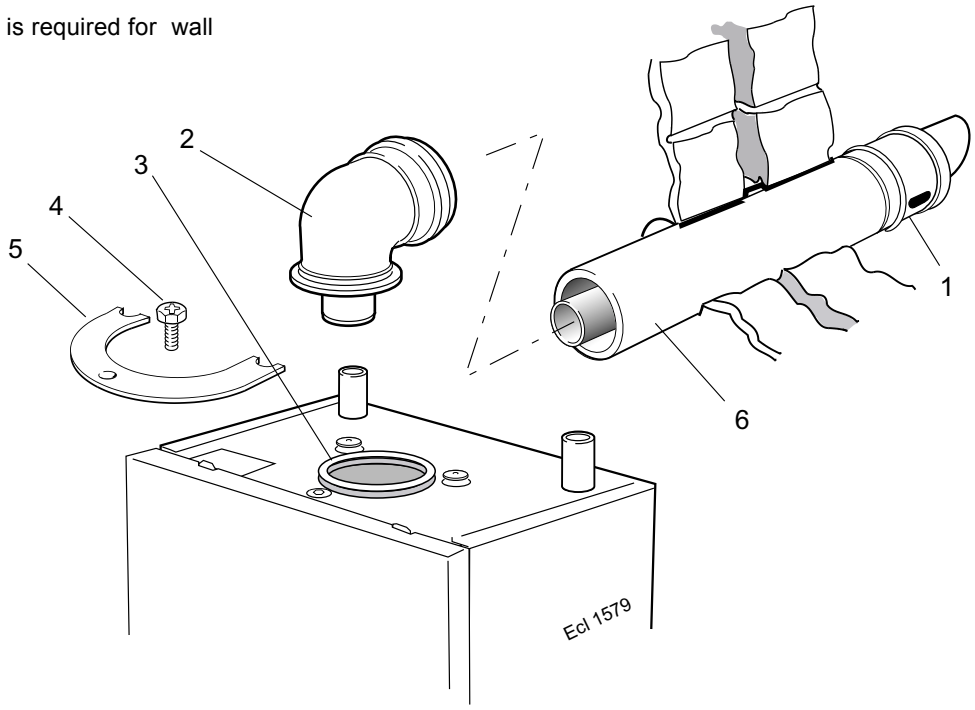

Rear flue arrangement shown

16 WALL MOUNTING TEMPLATE

1. Separate the templates.
2. Tape template **A** into the selected position.
3. Ensure squareness by hanging a plumbline as shown. If fitting a side flue extend the flue centre line onto the side wall, tape template **B** into selected position.
4. Mark onto the wall the following:
   - **a.** The wall mounting plate screw positions (choose one from each group) and lower fixing screw position.
   - **b.** The position of the flue duct hole.

Note.
Mark the centre of the hole as well as the circumference

4. Remove the template from the wall.

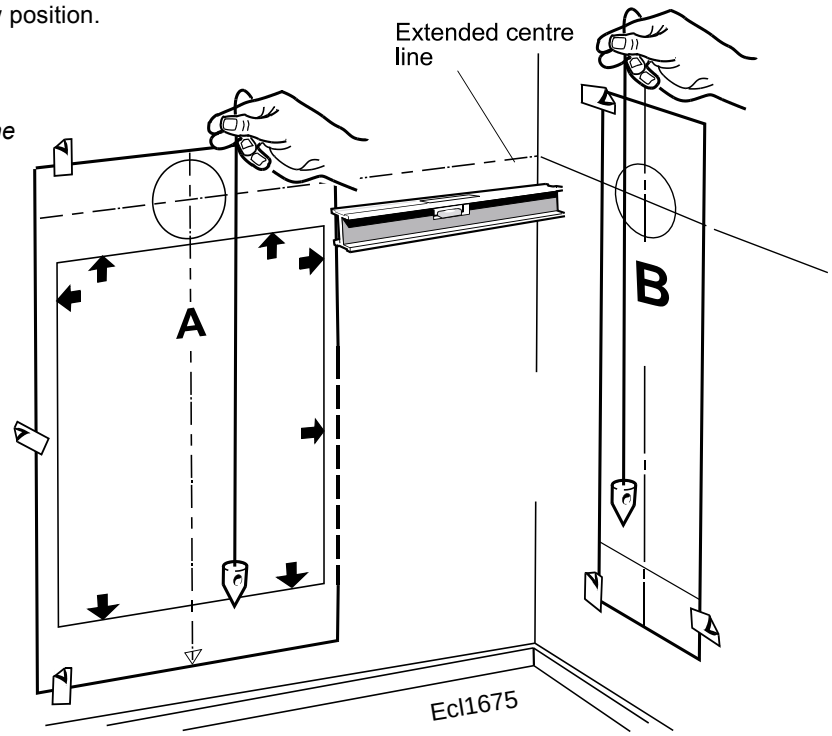

17 PREPARING THE WALL

IMPORTANT. Ensure that, during the cutting operation, masonry falling outside of the building does not cause damage or personal injury.

1. Cut the flue hole (preferably with a 5" core boring tool), ensuring that the hole is square to the wall. Both wall faces immediately around the cut hole should be flat.
2. Drill 3 holes with a 7mm (1/4") masonry drill and insert the plastic plugs provided, for the wall mounting plate and the jacking screw plate.

Note.
If using the stand-off kit then drill 4 holes (choosing one from each group but not the jacking screw).

3. Locate two No.10 x 2" screws in the wall mounting plate (one at each side, in any of the 3 holes provided at each side) and screw home.

Note.
If using the stand-0ff kit then locate the stand-off channel and screw home.

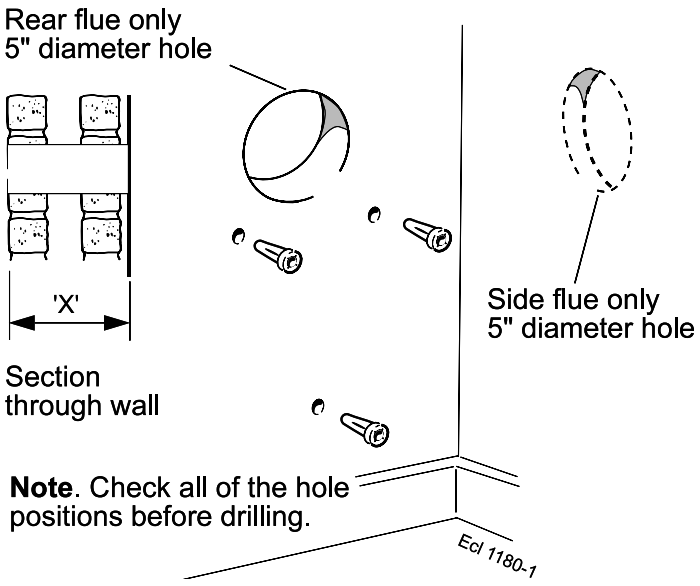

18 CUTTING THE FLUE - REAR **Wall thicknesses of 114 to 345mm**

Note. *If using the extension ducts go to Frame 20.*
If the stand-off frame is used it is essential to add 33mm to dimension X.

1. Measure and note wall thickness X. Refer Frame 14.
2. Add 75mm (3 ") to dimension X and, measuring from the groove, cut the outer tube only.
3. To ensure the tube is cut square, mark the flue all the way round.
4. Cut the inner tube to a length 20mm (3/4") longer to aid engagement. Use the cardboard support.

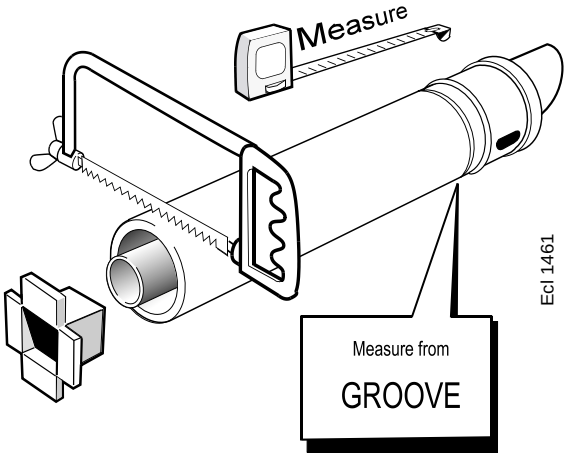

19 CUTTING THE FLUE - SIDE **Wall thicknesses of 114 to 300mm**

Note. *If using the extension ducts go to Frame 20.*

1. Measure and note wall thickness X. Refer Frame 14.
2. Add 115mm (4 1/2 ") to dimension X and, measuring from the groove, cut the outer tube only.
3. To ensure the tube is cut square, mark the flue all the way round.
4. Cut the inner tube to a length 20mm (3/4") longer to aid engagement. Use the cardboard support.

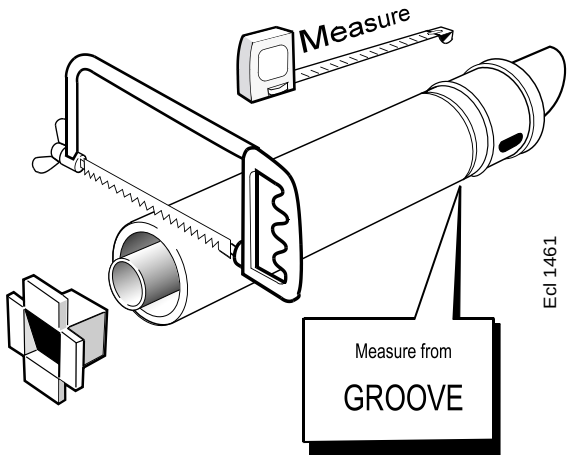

20 FLUE EXTENSION DUCTS - For flue lengths greater than 480mm

Pack D Flue extension duct kit contents.

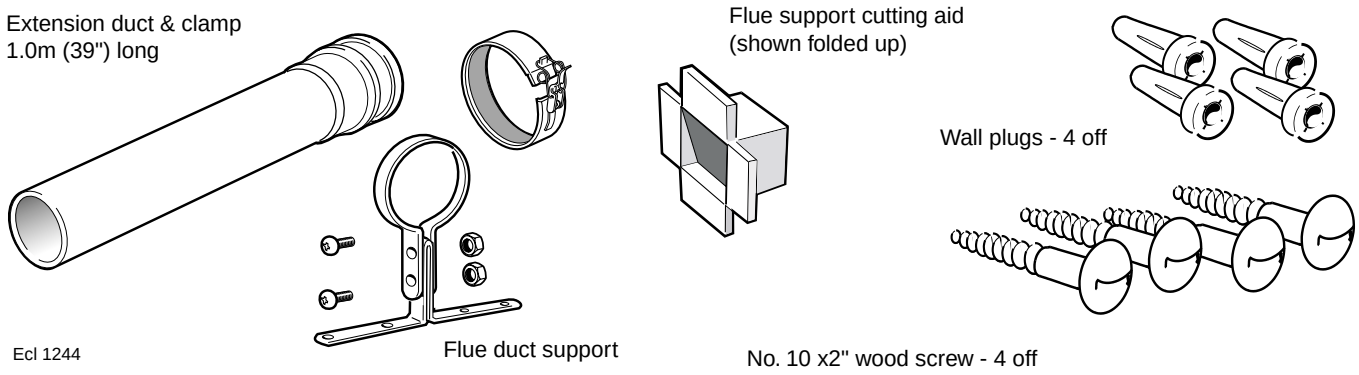

21 FLUE EXTENSION DUCTS - continued

Use a maximum of 3m extended flue ONLY

General arrangement

1. A ***maximum*** of 3 extension ducts (one suitably cut) plus the standard flue duct may be used together.
2. Flue extensions of greater length than 1m (39") should be supported with the bracket provided, suitably adjusted. Refer to Frame 24.

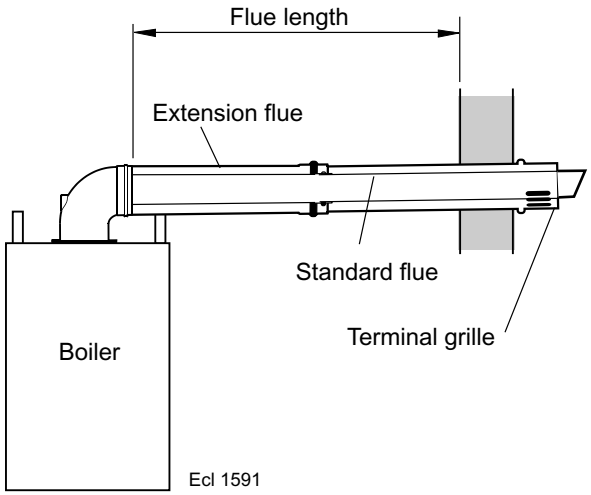

Note. *Side flue shown*

22 FITTING THE KIT

1. Remove the cardboard support aid from the flue and place safely to one side.
2. Fit the inner flue extension duct onto the inner flue duct.
3. Fit the outer flue extension duct onto the outer air duct.
4. Using the clamp provided clamp the flue lengths together.
5. Repeat steps 1-4 if a second flue extension is required.
6. Measure and mark the flue length required onto the flue, measuring from the groove near the terminal.
7. To ensure a square cut, mark the flue all the way round.
8. Cut to length using the cardboard support aid.
9. Remove the cardboard off-cut and deburr the metal edges.

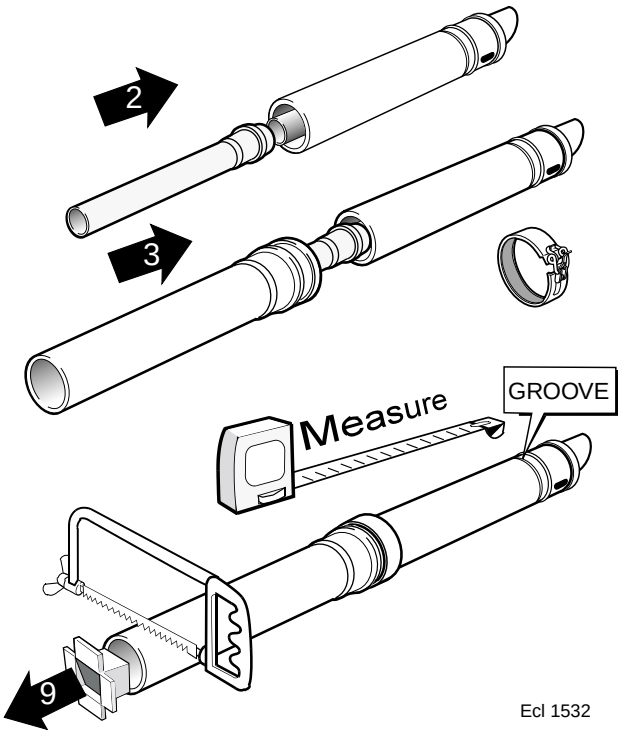

23 MOUNTING THE BOILER

1. Lift the boiler onto the wall mounting plate, as shown.
2. Check the boiler alignment using a spirit level and adjust as necessary with the jacking screw.
3. Align the hole in the jacking plate with the pre-drilled hole in the wall and fix in position with the No.10 x 2" screw provided.

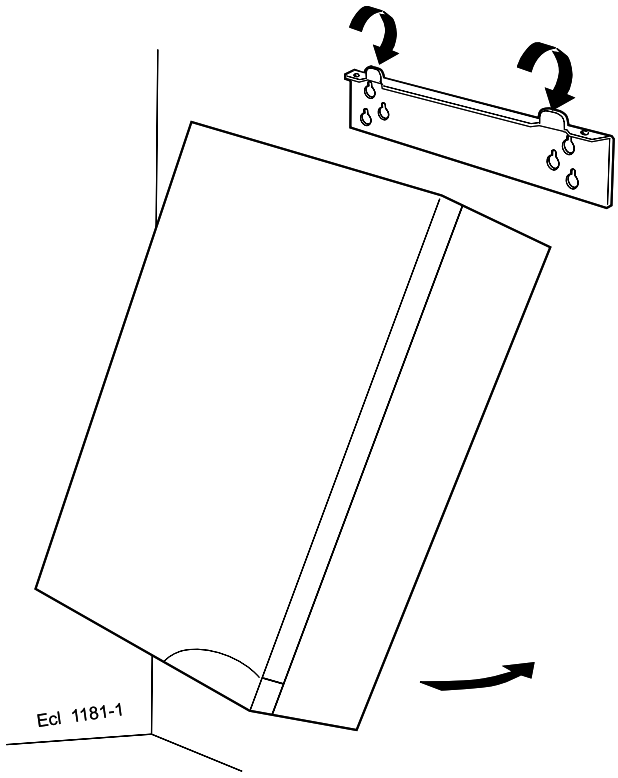

24 CONNECTING THE FLUE TO THE BOILER

1. Insert the flue assembly through the prepared hole in the wall.
2. Locate the flue turret on the top of the boiler, ensuring that the turret gasket is in place.
3. Locate the flue into the turret.
4. Secure the flue turret on top of the boiler by inserting the open ends of the turret clamp under the 2 studs and fixing it in the middle with the single M5 x 10mm pozi-hex screw provided.
5. **Flues over 1 metre long.**

   Fix the flue support bracket to the wall, using the wall plug and wood screw. For standard installations use the short wood screw.

   If the stand-off option is used, secure the support bracket using the spacer bracket and long wood screw.

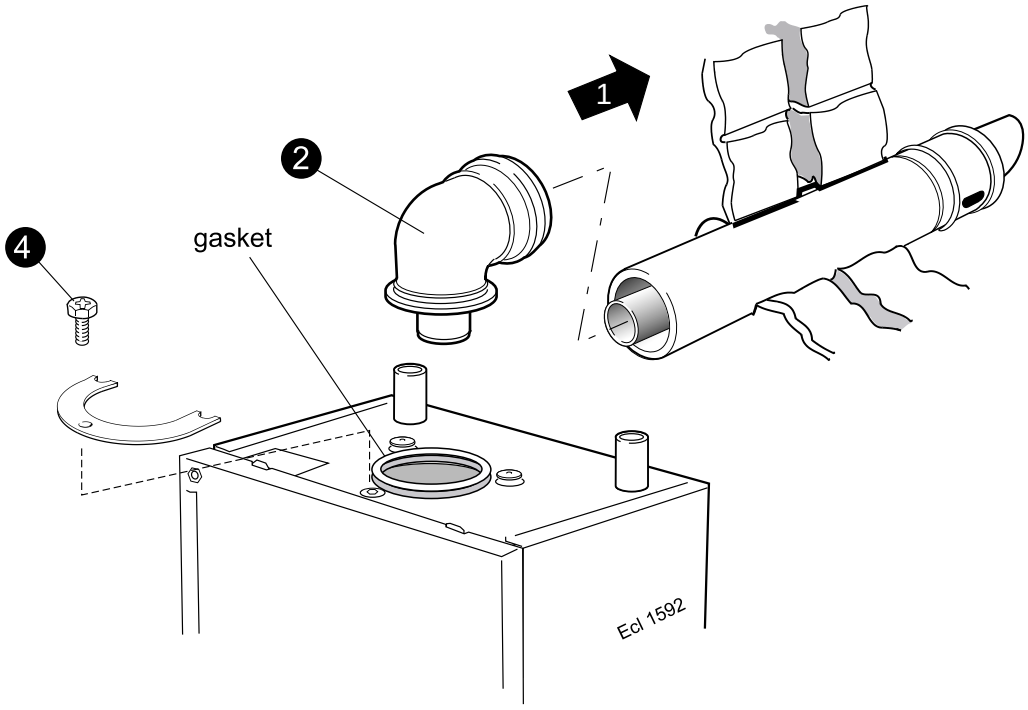

25 BOILER WATER CONNECTIONS

The boiler flow and return pipes are supplied fitted to the boiler and ready for top connection.

Note. *For heating loads in excess of 60 000 Btu/hr use 28mm connectors.*

TOP CONNECTION
Connect the system pipework to the boiler flow and return pipes.

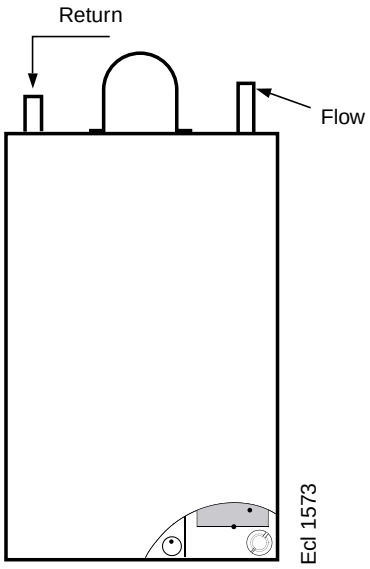

26 GAS CONNECTION

IMPORTANT. The gas service cock contains a non-metallic seal so must not be overheated when making capillary connections.

Refer to Frame 2 for details of the position of the gas connection.

A working gas pressure of 20 mbar (8" w.g.) should be available at the boiler inlet with the boiler firing. Refer to Frame 33 or 'Servicing' for details of the pressure test point position.

Extend a gas supply pipe NOT LESS THAN 15mm O.D. to the boiler and connect to the gas service cock via the union. Ensure that the gas supply pipe does not foul the boiler casing.

27 ELECTRICAL CONNECTIONS

WARNING. This appliance MUST be earthed.

A mains supply of 230 V ~ 50 Hz is required.

The fuse rating should be 3 A.

Wiring external to the boiler MUST be in accordance with the current I.E.E. (BS.7671) Wiring Regulations and any local regulations.

All external controls and wiring MUST be suitable for mains voltage.

Wiring should be 3 core PVC insulated cable NOT LESS than 0.75 mm^2 (24 x 0.2mm) and to BS. 6500, Table 16.

Connection must be made in a way that allows complete isolation of the electrical supply - such as a double pole switch having a 3mm (1/8") contact separation in both poles, or a plug and socket serving only the boiler and system controls. The means of isolation must be accessible to the user after installation.

28 INTERNAL WIRING

A pictorial wiring diagram is shown in Frame 29 .

1. Route the mains cable into the bottom Rear centre of the boiler.
2. Wire the live and neutral and earth wires into the plug.

   Note. *Ensure that the lengths of the current carrying conductors are shorter than the earth conductor so that if the cable slips in its anchorage the current carrying conductors become taut before the earth conductor.*
3. Secure the mains lead with the cable clamp.
4. Reconnect the mains lead plug. Ensure it is fully located.

   Note. *Wire any switched live supply into L2.*

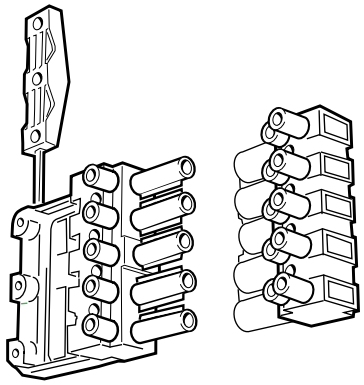

Ecl 1542

Incoming mains wiring detail

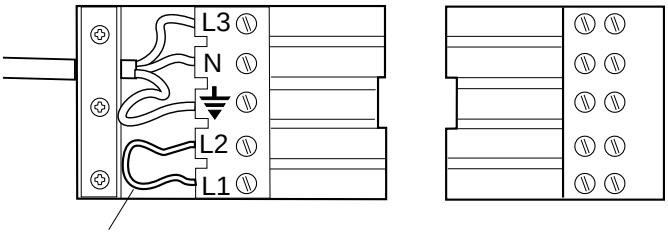

Remove link when connecting external programmer.

Mains Plug **(supplied in hardware pack)**

Socket **(fixed to boiler)**

29 EXTERNAL ELECTRICAL CONTROLS

Wiring external to the boiler MUST be in accordance with the current I.E.E. (BS.7671) Wiring Regulations and any local regulations.

The fuse should be 3A.

Room Thermostat

If the thermostat has a neutral connection use it. (It provides for more energy efficient operation by reducing switching temperature differentials.)

If parts of the pipework run outside the house or if the boiler will be left off for more than a day or so then a frost thermostat should be wired into the system. This is usually done at the programmer, in which case the programmer selector switches are set to OFF and all other controls MUST be left in the running position.

The frost thermostat should be sited in a cold place but where it can sense heat from the system.

Note. *If the boiler is installed in a garage it may be necessary to fit a pipe thermostat, preferably on the return pipework.*

Designation of the terminals will vary but the programmer and thermostat manufacturers' leaflets will give full details.

Diagram A shows an application to boilers fitted with a room thermostat only

Diagrams B and C show applications to boilers fitted with alternative time controls.

Earths are not shown for clarity but must never be omitted.

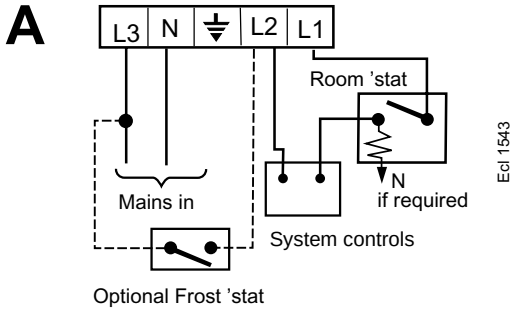

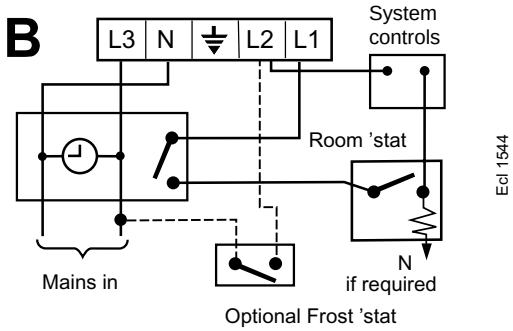

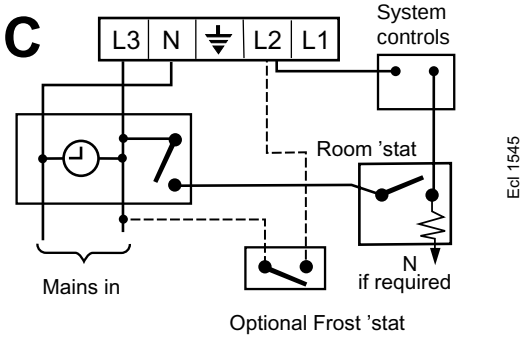

30 PICTORIAL WIRING

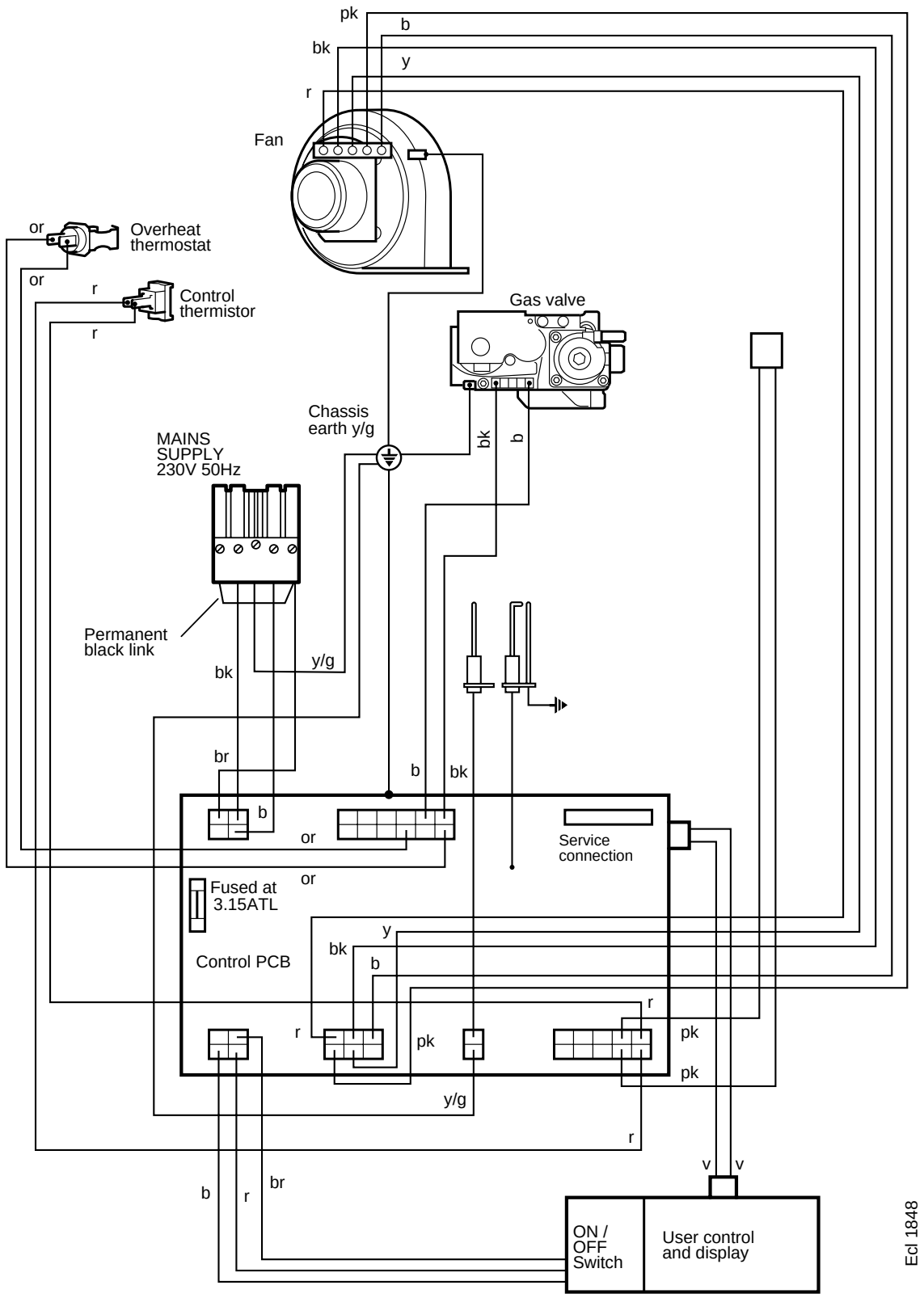

LEGEND

b	- blue	**r**	- red	**y**	- yellow
bk	- black	**w**	- white	**pk**	- pink
br	- brown	**or**	- orange	**y/g**	- yellow/green

31 FUNCTIONAL FLOW WIRING DIAGRAM

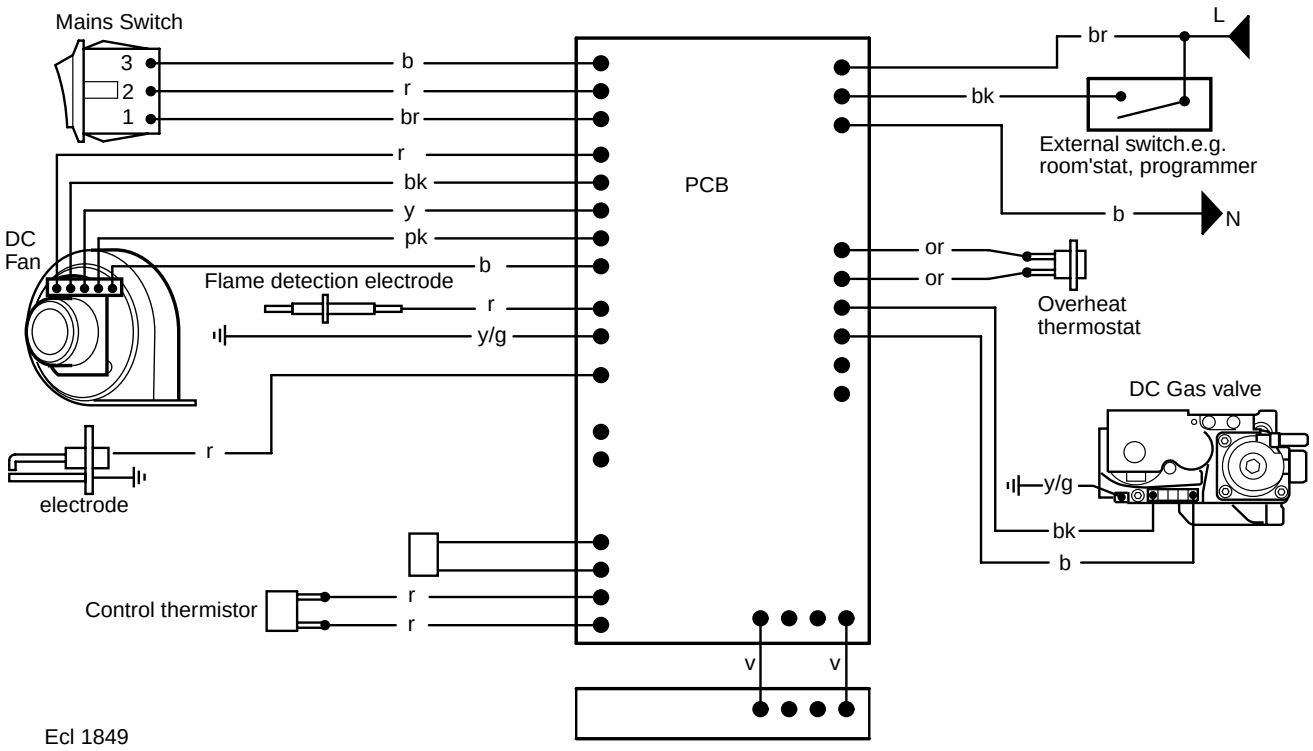

LEGEND

b - blue	**r** - red	**y/g** - yellow/green	**v** - violet
bk - black	**y** - yellow	**gy** - grey	**pk** - pink
br - brown	**w** - white	**or** - orange	

32 COMMISSIONING AND TESTING

A. Electrical Installation

1. Checks to ensure electrical safety should be carried out by a competent person.
2. ALWAYS carry out the preliminary electrical system checks, i.e. earth continuity, polarity, resistance to earth and short circuit, using a suitable test meter.

B. Gas Installation

1. The whole of the gas installation, including the meter, should be inspected and tested for soundness and purged in accordance with the recommendations of BS. 6891.
2. Purge air from the gas installation by the approved methods only.

WARNING. Whilst effecting the required gas soundness test and purging air from the gas installation, open all windows and doors, extinguish naked lights and DO NOT SMOKE.

33 INITIAL LIGHTING

LEGEND

A On/Off switch.
B Thermostat knob.
C 'Mains On' neon.
D 'Burner On' neon.
E Reset button.
F Inlet pressure test point.
G Gas service cock.
H Casing pressure test point.
J Overheat thermostat.
K Flow thermistor.

1. Check that the system has been filled and that the boiler is not air locked.

2. Check that all drain cocks are closed and any valves in the flow and return are open.

3. Check the electrical supply is off.

4. Refit the boiler sealing panel

5. Check the gas service is ON and the On/Off switch is OFF.

6. Carefully align the user control and gently push into place and secure with the single screw located underneath.

7. Remove the screw in the inlet pressure test point and connect a gas pressure gauge via a flexible tube .

8. Switch the electricity supply ON and check all external controls are calling for heat.

9. Set the boiler thermostat knob to maximum position and switch the boiler ON - OFF switch to ON the RED mains ON neon should now be illuminated. The boiler control should now go through its ignition sequence until the burner is established.

10. If the boiler does not light after 3 attempts the fault codes 'L' 'F' will be displayed. Press the reset button; the boiler will then repeat its ignition sequence. When the burner is established the GREEN burner ON neon will be permanently illuminated

11. Ensure that with the boiler operating the dynamic gas pressure is 20 mb.

IMPORTANT.
The gas input to the burner is regulated by the gas valve according to the air flow produced by the fan. It is NOT user-adjustable. Any interference to sealed settings on the gas valve will adversely affect operation and render our warranty void.

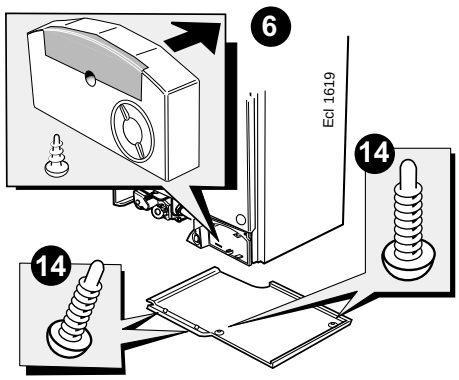

Note. *Boiler is shown with the front panel and sealing panel removed.*

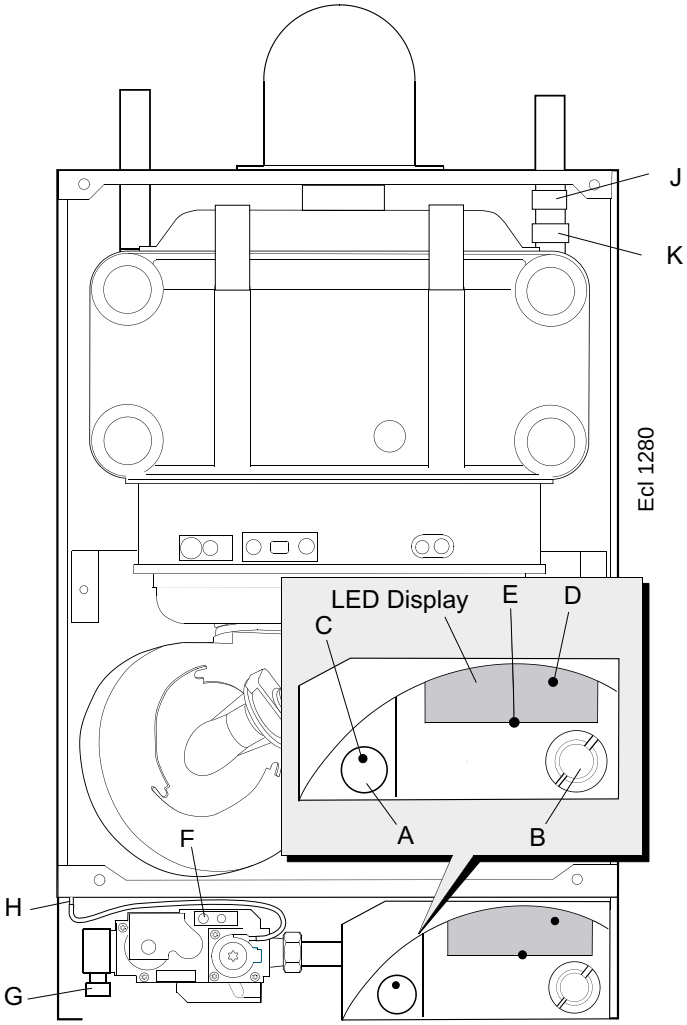

12. Switch OFF the ON-OFF switch.

13. Remove the pressure gauge and tube. Replace the sealing screw in pressure test point. Ensure a gas tight seal is made.

14. Refit the boiler front panel and bottom panel .

THE DISPLAY

The user controls has one neon and one display to inform the user about the status. The display will show the status of the boiler. The neon will show the status of the flame. If no flame is detected the neon is blinking. When the flame is detected the neon will be lit permanently.

Below is a list with display function in normal operation.

'o' Standby, no demand for heat present.

'c' Boiler is active for central heating.

'H' Boiler is blocking for a specific error, display will be blinking alternating with a number and letter to show what kind error is detected.

'L' Boiler is in lockout for a specific error, the display will be blinking alternating with a number and letter to show what kind of error is detected.

34 GENERAL CHECKS

Make the following checks for correct operation

1. **Central Heating**
   The correct operation of ANY programmer and all other system controls should be proved. Operate each control separately and check that the main burner or circulating pump, as the case may be, responds.
2. **Gas rate**
   Operate the boiler for 10 minutes. Check the boiler gas rate, ensuring the boiler is at full output whilst measurements are recorded (see Table 2).
3. **Water circulation system**
   Note. *Flushing solutions should be used during the flushing procedure - refer to Frame 9.*
   - **a.** With the system HOT examine all water connections for soundness.
   - **b.** With the system still HOT, turn off the gas, water and electricity supplies to the boiler and drain down to complete the flushing process.
   - **c.** Refill and vent the system, add inhibitor (see Frame 9), clear all air locks and again check for water soundness.
   - **d.** Balance the system (see Frame 4).
4. Finally set the controls to the User's requirements.

Knob Setting	Flow Temperature °C	°F
Min	65	150
Max	82	180

- The temperatures quoted alongside are approximate, and vary between installations.

35 HANDING OVER

After completing the installation and commissioning of the system the installer should hand over to the householder by the following actions:

1. Hand the User's Instructions to the householder and explain his or her responsibilities under Relevant National Regulations.
2. Explain and demonstrate the lighting and shutting down procedures.
3. The operation of the boiler and the use and adjustment of ALL system controls should be fully explained to the householder to ensure the greatest possible fuel economy consistent with household requirements of both heating and hot water consumption.
   Advise the User of the precautions necessary to prevent damage to the system and to the building in the event of the system remaining inoperative during frosty conditions.
4. Explain the function and the use of the boiler controls and external controls.
5. Explain the function of the boiler fault mode. Explain that if a fault is indicated the boiler should be turned off and a local heating installer consulted.
6. Explain and demonstrate the function of time and temperature controls, radiator valves, etc., for the economic use of the system.
7. If any programmer is fitted then draw attention to the Programmer User's Instructions and hand them to the householder.
8. **After installation, commissioning, and customer hand-over please complete the benchmark appliance log book and leave this with the customer.**
9. **IMPORTANT**

   A comprehensive service should be carried out ANNUALLY.

   Stress the importance of regular servicing by a CORGI registered installer.
   As the installer you may wish to undertake the service contract yourself or, alternatively, offer to the customer the benefits of the Ideal Care Scheme, details of which are outlined in the Householder Pack supplied with this boiler.

36 SERVICING SCHEDULE

To ensure the continued safe and efficient operation of the appliance it is recommended that it is checked at regular intervals and serviced as necessary. The frequency of servicing will depend upon the installation condition and usage but should be carried out at least annually. *It is the law that any service work must be carried out by a registered CORGI installer.*

1. Light the boiler and carry out a pre-service check, noting any operational faults.
2. Check the gas consumption.
3. Connect a suitable gas analyser to the sampling point on top of the boiler or into the flue terminal, if access if possible. Refer to Frame38

   For correct boiler operation the CO/CO_2 content of the flue gas should not be greater than 0.004 ratio. If this is the case, and the gas input is at least 90% of the nominal, once compliance with the note above is ensured, then no further action need be taken. If not, proceed to step 4 .
4. Clean the main burner.
5. Clean the heat exchanger.
6. Check the main injector for blockage or damage.
7. Check that the flue terminal is unobstructed and that the flue system is sealed correctly.

The servicing procedures are covered more fully in Frames 37 to 42 and MUST be carried out in sequence.

Note. *In order to carry out either servicing or replacement of components the boiler front panel, bottom panel and sealing panel must be removed. Refer to Frames 37 and 38.*

WARNING. Always turn off the gas supply at the gas service cock, and switch off and disconnect the electricity supply to the appliance before servicing.

IMPORTANT.

8. After completing the servicing or exchange of components always test for gas soundness and carry out functional checks as in 2 and 3 above.
9. When work is complete the sealing panel MUST be correctly refitted, ensuring that a good seal is made.
10. Complete the service section in the Benchmark log book.

DO NOT OPERATE THE BOILER IF THE SEALING PANEL IS NOT FITTED.

37 BOILER FRONT PANEL REMOVAL

1. Remove the 2 securing screws from the underside of the appliance.
2. Pull the panel forward at the bottom and lift to disengage it from the top lugs.

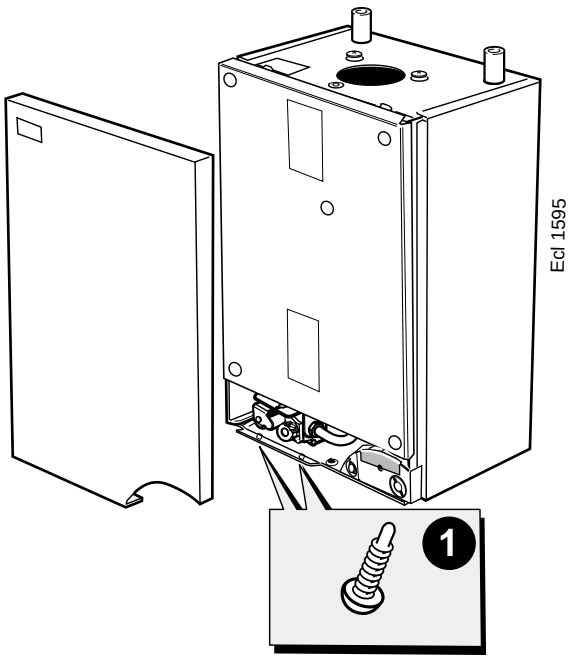

38 BOILER SEALING/ BOTTOM PANEL REMOVAL

1. To remove the sealing panel remove the 4 retaining screws.
2. Remove the panel.
3. To remove the bottom panel remove the 2 screws.
4. Pull the RHS of the panel down and slide it to the right to withdraw.

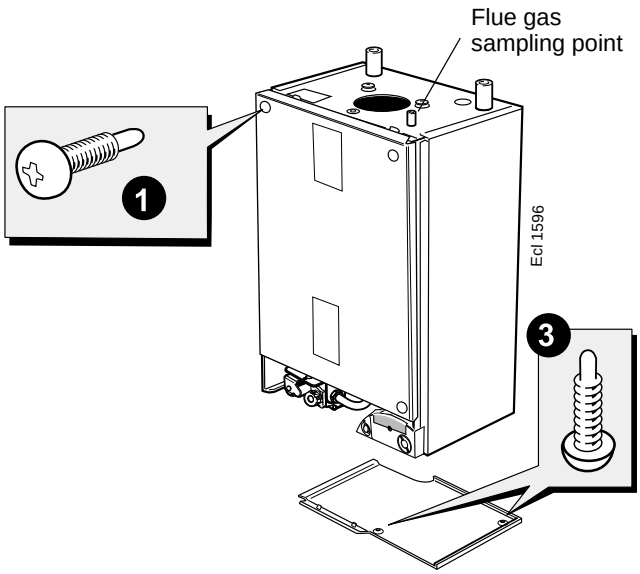

39 FAN AND VENTURI ASSEMBLY REMOVAL

1. Disconnect the electrical leads from the fan.
2. Undo the gas pipe union connection to the injector housing.
3. Undo the single retaining screw on the fan mounting bracket.
4. Lift off fan and venturi assembly.
5. Inspect the injector for blockage or damage.

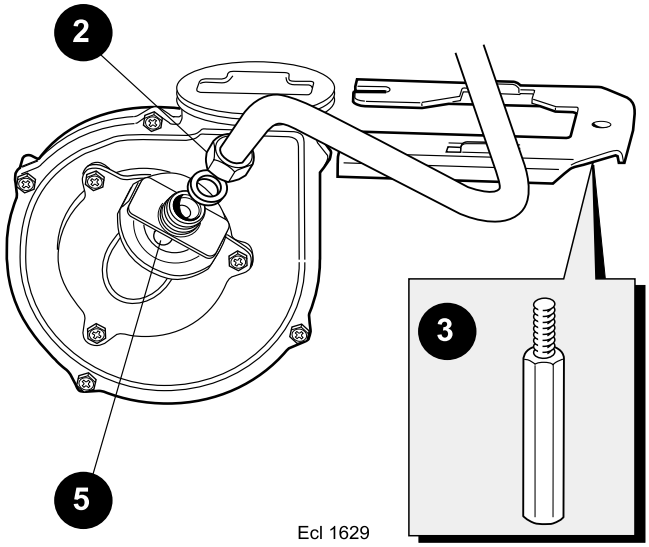

40 BURNER REMOVAL AND CLEANING

1. Undo and remove the 6 screws securing the burner. (the 3 screws at the rear are extended to ease access.)
2. Remove the burner from the combustion chamber.

IMPORTANT

The burner head is a ceramic plaque construction. *Care should be taken to ensure that the burner is not placed down upon its face as this may cause damage to the ceramic.*

3. Brush off any deposits that may be on the ceramic with a SOFT brush.
4. Inspect the sealing gasket around the burner for any signs of damage. Replace if necessary.

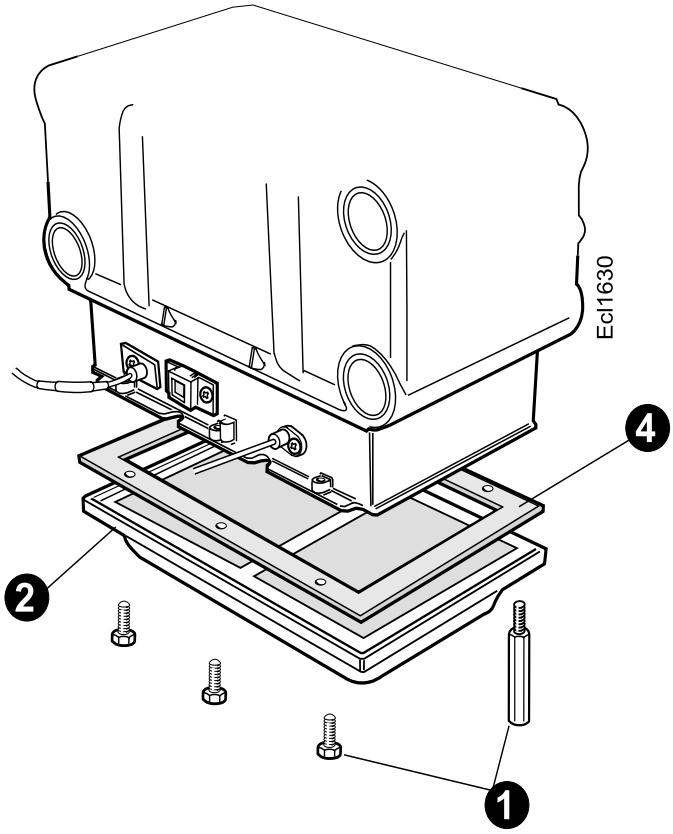

41 CLEANING THE HEAT EXCHANGER

1. Remove ignition and sensing electrodes (Frames 47 &48).
2. Remove the 2 spring clips securing the collector hood to the heat exchanger.
3. Slide the flue spigot upwards into the flue turret to allow the collector hood to slide forwards and remove the collector hood.
4. Slide the flue spigot downwards and remove from the flue turret.
5. Remove the 6 flue baffles (m5080 only).
6. Using a suitable tool as supplied in the standard B.G. flue brush kit clean between the heat exchanger fins from the bottom of the heat exchanger.

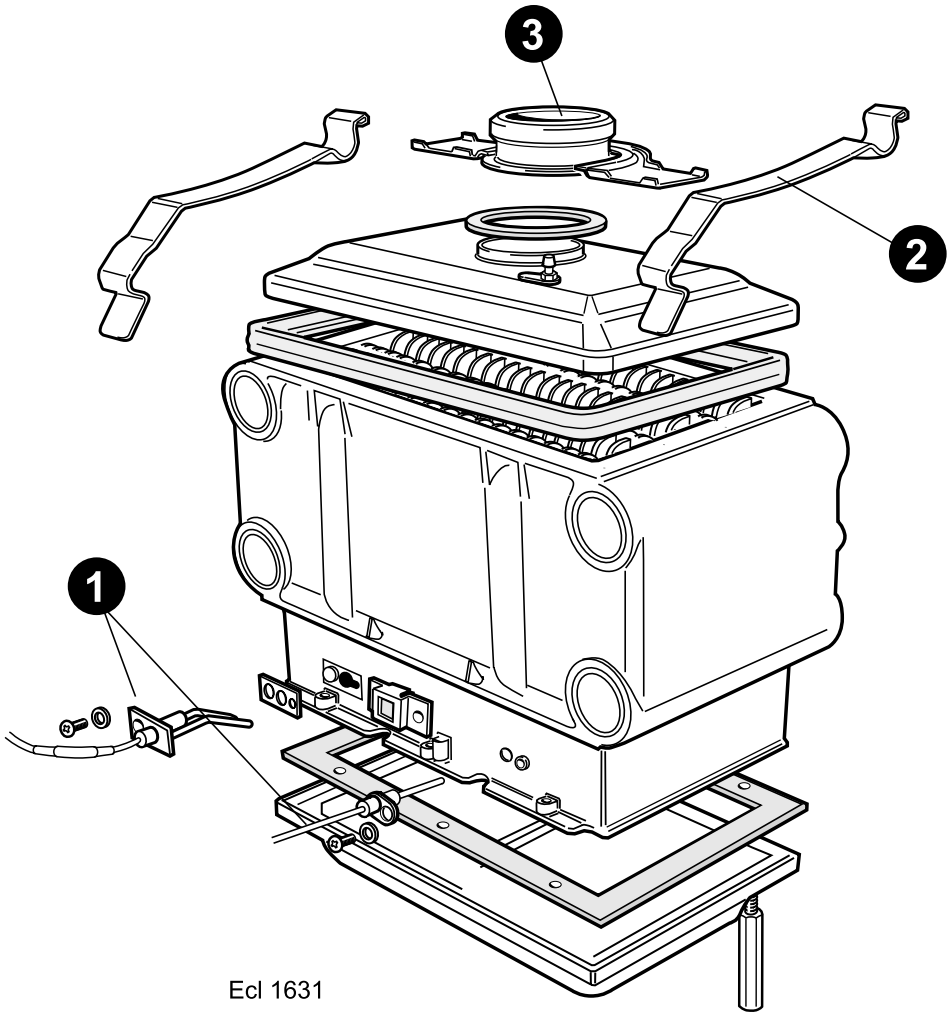

Ecl 1631

42 RE-ASSEMBLY

Reassemble the boiler in the following order.

1. Refit the baffles (m5080 only) ensuring baffles are fully located in the heat exchanger.
2. Refit the flue spigot to the flue turret.
3. Refit the collector hood to the heat exchanger. Ensure the sealing gasket around the flue outlet on the collector hood is in place. Renew any damaged or deteriorating gaskets.
4. Slide the flue spigot downwards and secure the 2 spring clips. Ensure the clips are located correctly over the inter panel.
5. Refit the electrodes (check dimensions, see Frame 47 & 48).
6. Refit the burner, renewing any damaged or deteriorating sealing gaskets.
7. Refit the fan / venturi assembly.
8. Reconnect the fan electrical lead.
9. Refit the boiler front and bottom panel.

IMPORTANT.

Ensure the boiler sealing panel is correctly fitted and that a good seal is made.

10. Refit the boiler casing.
11. Turn on the gas supply at the gas service cock.
12. Reconnect the electrical supply.

43 REPLACEMENT OF COMPONENTS

GENERAL

When replacing ANY component:

1. Isolate the electricity supply.
2. Turn off the gas supply.
3. Remove the boiler front panel and sealing panel (Frames 37 & 38).
4. After replacing any components check the operation of the boiler including gas soundness, gas rates and combustion test.

IMPORTANT

When work is complete, the sealing panel must be correctly fitted, ensuring that a good seal is made.

Note.

In order to assist fault finding, the control panel has an LCD display. The key to boiler fault conditions is shown in Frame 59.

THE BOILER MUST NOT BE OPERATED WITHOUT THE SEALING PANEL FITTED

44 CONTROL THERMISTOR REPLACEMENT

1. Refer to Frame 36.
2. Pull the electrical leads off the control thermistor.
3. Pull the control thermistor and spring clip off the flow pipe.
4. Replace thermistor and reconnect leads, ensuring that the spring clip is securely holding the thermistor to the flow pipe.
5. Re-assemble the boiler in reverse order.
6. Check the operation of the boiler.

Note.
Removal of the collector hood and flue spigot will facilitate better access.

WARNING.
Beware these components may be hot if the boiler has recently been run.

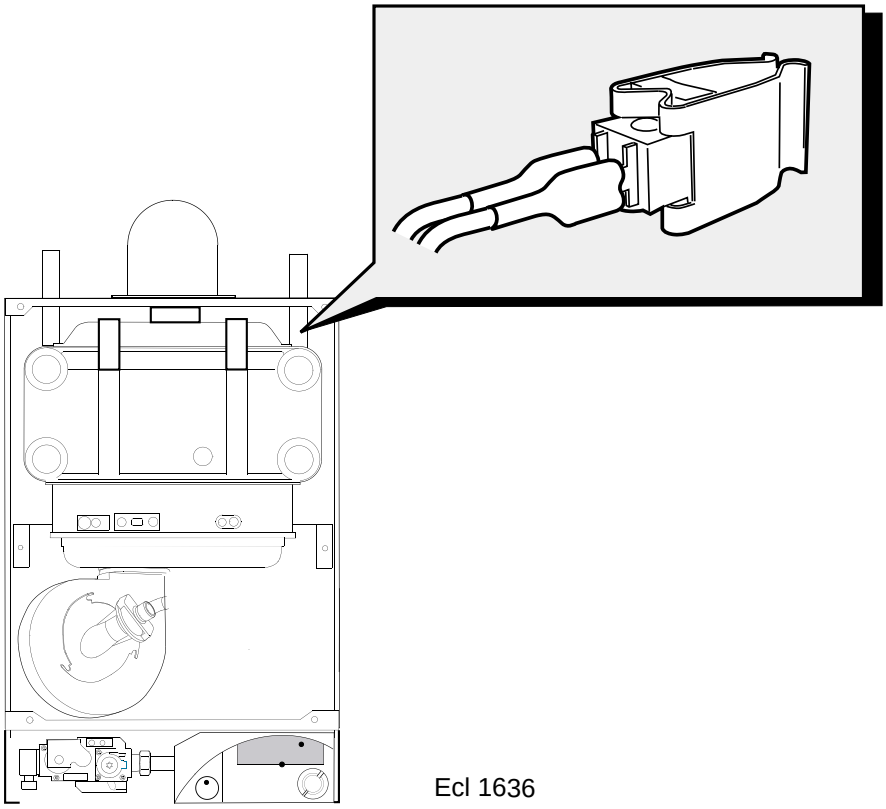

Ecl 1636

45 FAN REPLACEMENT

1. Refer to Frame 36.
2. Disconnect the electrical leads from the fan.
3. Undo the gas pipe union connection to the injector housing.
4. Undo the single retaining screw on the fan mounting bracket.
5. Remove the fan
6. Unscrew the 3 retaining screws and remove the venturi assembly, *noting the orientation of the venturi in relation to the fan body.*
7. Transfer the venturi assembly to the new fan, replacing the gasket if evidence of damage or deterioration is visible.
8. Fit the new fan / venturi assembly .
9. Re-assemble the boiler in reverse order taking care not to over tighten the single retaining screw on the fan mounting bracket.
10. Check the operation of the boiler. Refer to Frame 36.

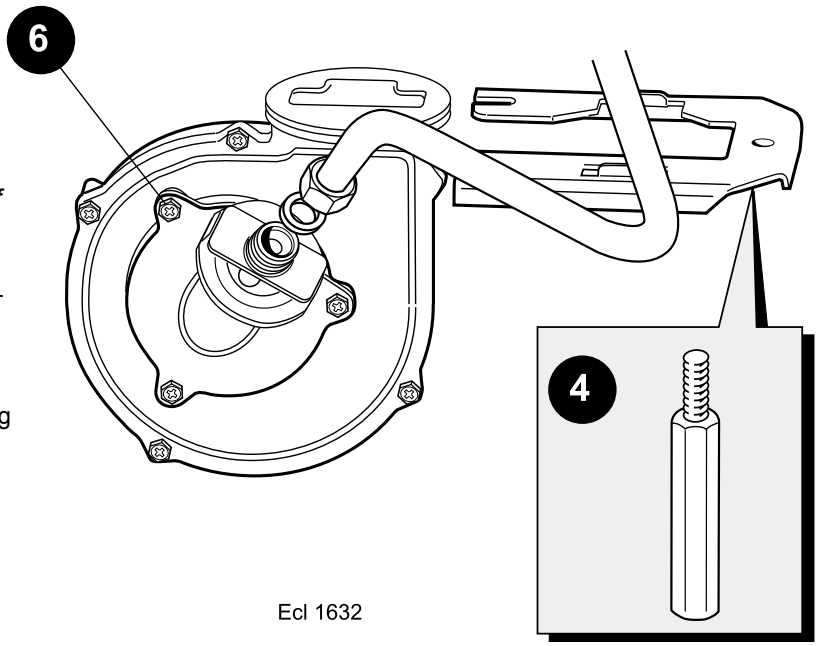

Ecl 1632

46 BURNER REPLACEMENT

1. Refer to Frame 36.
2. Remove fan assy. Refer paragraphs 2 & 3, Frame 45.
3. Undo and remove the 6 screws securing the burner (the 3 screws at the rear are extended to ease access.)
4. Remove the burner.
5. Fit the new burner.
6. Re-assemble the boiler in reverse order.
7. Check operation of the boiler. Refer to Frame 36.

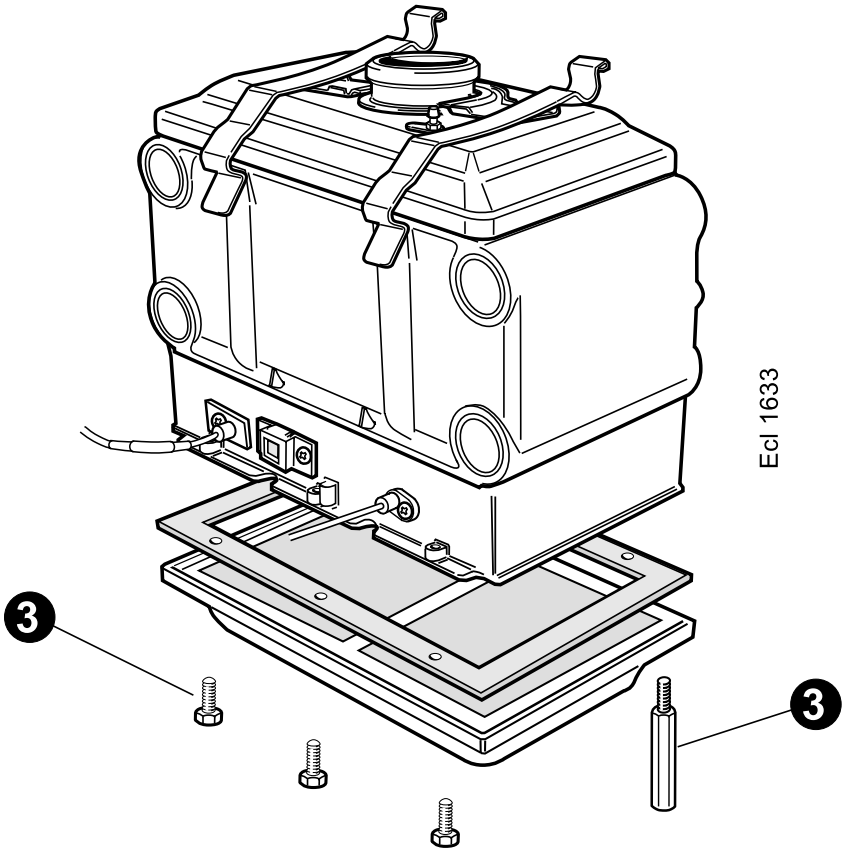

Ecl 1633

47 IGNITION ELECTRODE REPLACEMENT

1. Refer to Frame 36.
2. Lower the control box, as shown in Frame 52.
3. Unplug the spark electrode lead from the control box.
4. Undo the single retaining screw holding the spark electrode to the combustion chamber.
5. Remove the electrode, *taking care not to dislodge the grommet from the casing*.
6. Fit the new ignition electrode, using the new gasket supplied and check dimensions on shown.

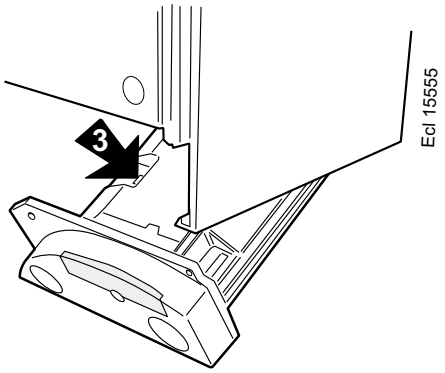

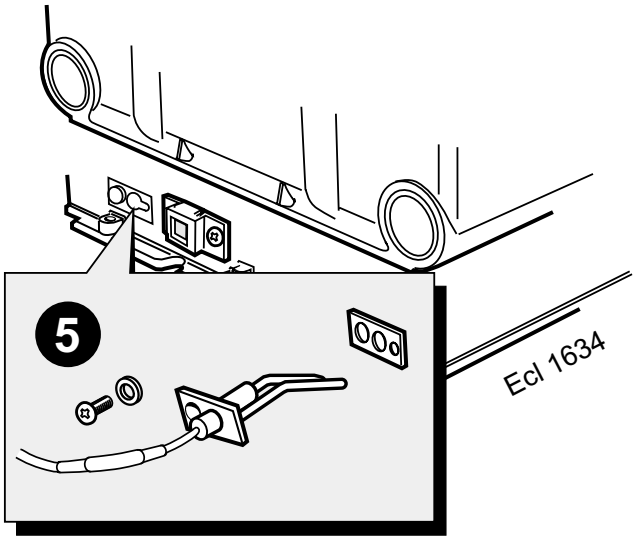

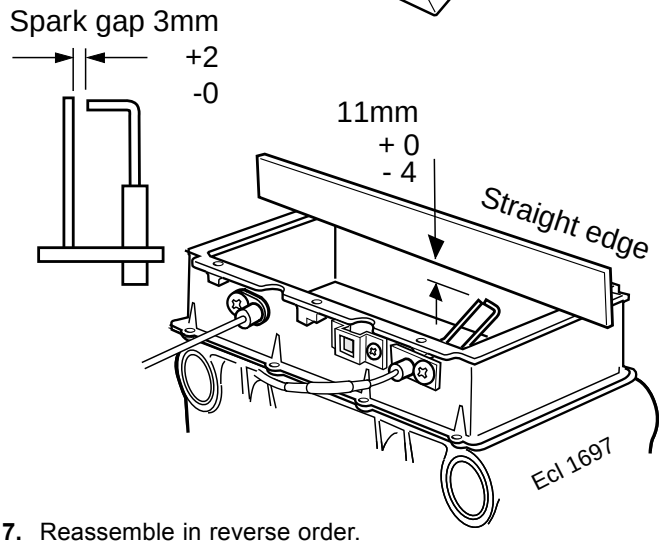

7. Reassemble in reverse order.
8. Check operation of the boiler. Refer to Frame 36.

48 SENSING ELECTRODE REPLACEMENT

1. Refer to Frame 36.
2. Lower the control box, as shown in Frame 52.
3. Unplug the sensing electrode lead from the control box.

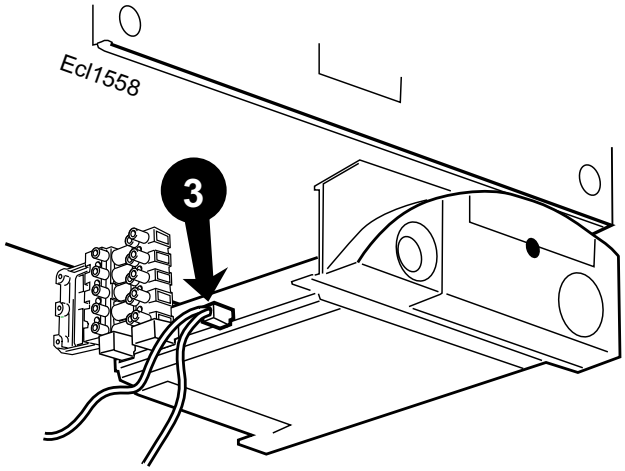

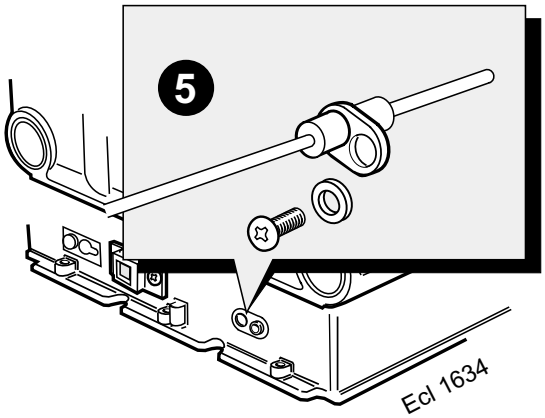

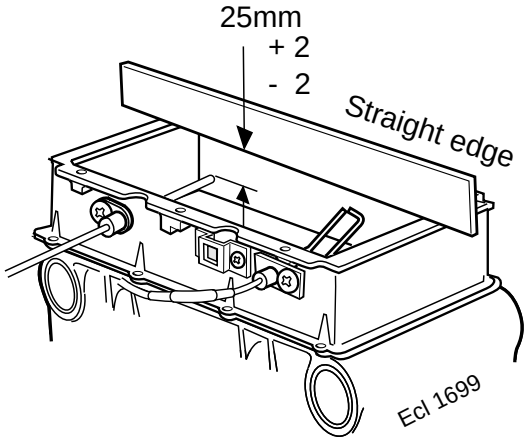

4. Unbolt the sensing electrode earth lead from the earth point beneath the boiler.
5. Remove the electrode, complete with grommet.
6. Fit the new sensing electrode, using the new gasket supplied.
7. Reassemble in reverse order.
8. Check operation of the boiler. Refer to Frame 36.

49 BURNER INJECTOR REPLACEMENT

1. Refer to Frame 36.
2. Remove the fan / venturi assembly, as shown in Frame 45.
3. Unscrew the 2 injector housing retaining screws.
4. Withdraw the injector housing.
5. Fit the new injector housing.
6. Reassemble in reverse order, ensuring that the new gas seal supplied is located correctly in the injector housing.
7. Check operation of the boiler. Refer to Frame 36.

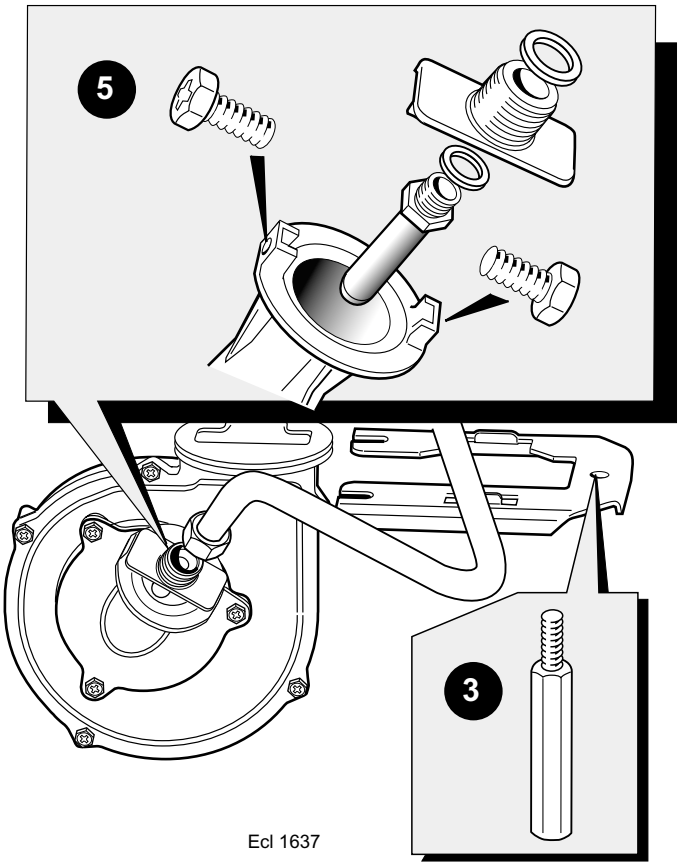

50 GAS CONTROL VALVE REPLACEMENT

1. Refer to Frame 36.
2. Remove the 2 retaining screws from the underside of the appliance. Unhook and remove the front panel.
3. Remove the bottom panel 2 screws.
4. Allow the RHS of the bottom panel to lower slightly.
5. Remove the gas valve electrical connections and the silicon sensing pipe.
6. Withdraw the LHS of the bottom panel from the retaining clips.
7. Undo the union nut between the gas valve and the gas inlet cock.
8. Undo the union nut on the outlet side of the gas valve.
9. Undo the gas valve bracket retaining nut and slide the gas valve forward, and remove.
10. Fit new valve, reassemble in reverse order, ensuring that any seals showing damage or deterioration are replaced.
11. Check operation of the boiler. Refer to Frame 36.

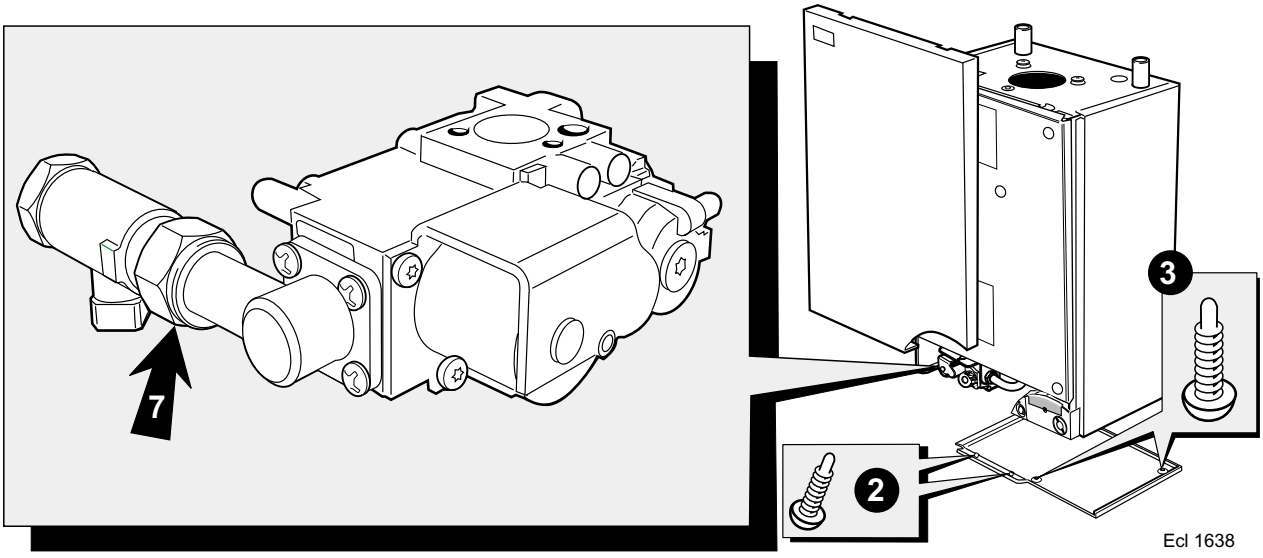

51 CONTROL BOX REPLACEMENT

Refer to Frame 36.

1. Remove the 2 retaining screws.
2. Lift front panel and remove.
3. Remove the 2 bottom panel screws.
4. Allow the RHS of the bottom panel to lower slightly.
5. Withdraw the LHS of the bottom panel from the retaining clips.
6. Unscrew the 2 control box retaining screws.
7. Unplug all the electrical wiring from the control box.
8. With the control box lowered, pull the assembly forward to remove from the housing.
9. Transfer the mounting brackets to the new control box.
10. Reassemble in reverse order, ensuring that the control box is located correctly in the housing before reconnecting the electrical wiring.
11. Check operation of the boiler. Refer to Frame 36.

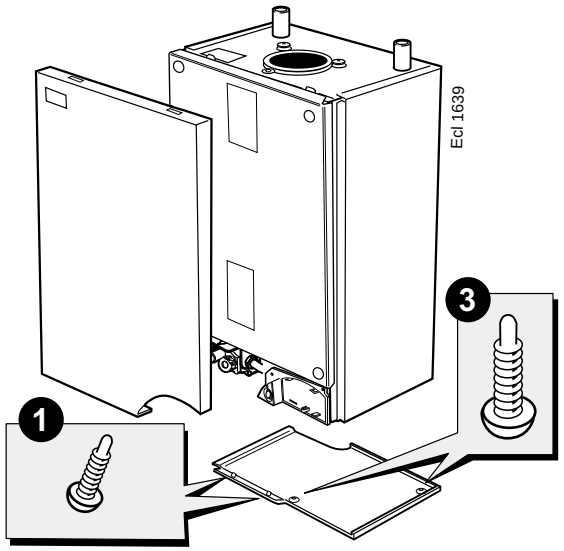

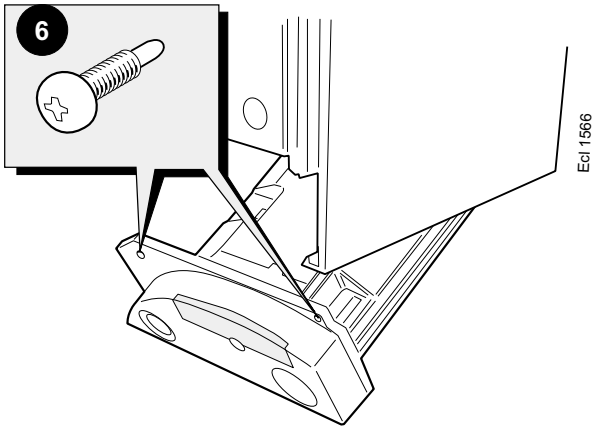

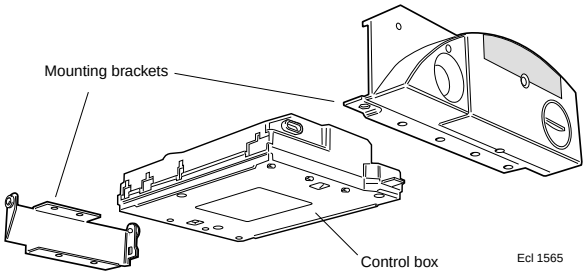

52 MAINS SWITCH REPLACEMENT

1. Refer to Frame 36.
2. Remove the boiler bottom panel (refer to Frame 37).
3. Unscrew the 2 control box screws and allow the control box to lower.
4. Push out the mains switch from the rear, as shown.
5. Refit the new switch ensuring the electrical leads are reconnected correctly. Ensure that the key on the switch is correctly aligned with the slot in the plastic moulding.
6. Reassemble in reverse order.
7. Check operation of the boiler. Refer to Frame 36.

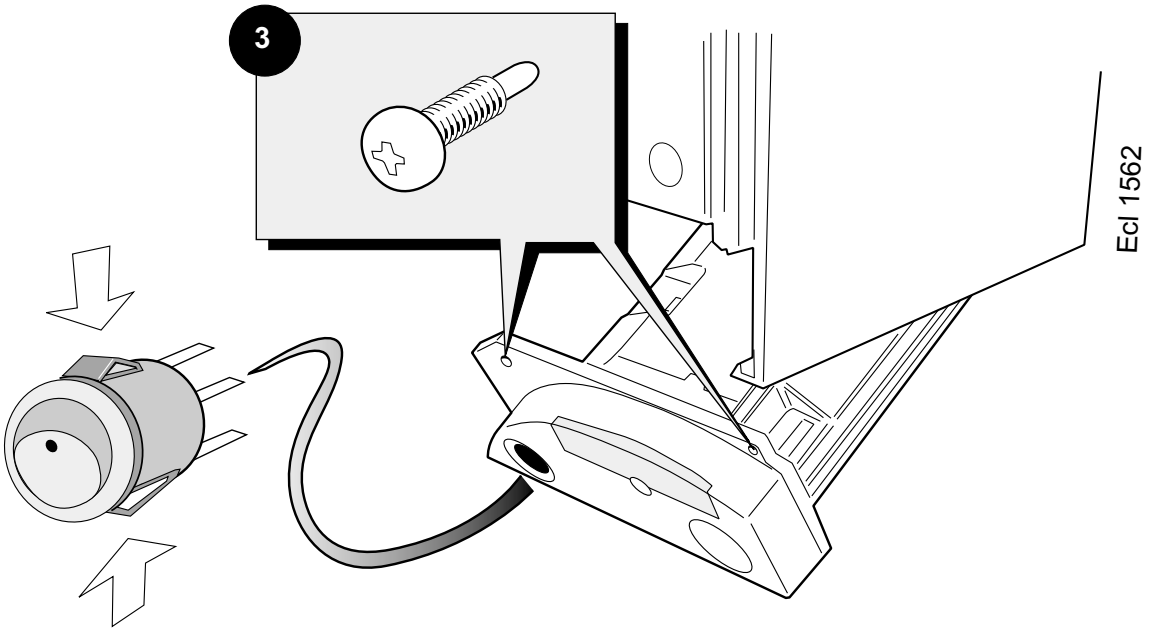

53 SIGHT GLASS REPLACEMENT

1. Refer to Frame 36.
2. Unscrew the 2 sight glass retaining screws.
3. Remove the sightglass, gasket and bracket.
4. Fit new sight glass, using the new bracket and gasket supplied.
5. Reassemble in reverse order.
6. Check operation of the boiler. Refer to Frame 36.

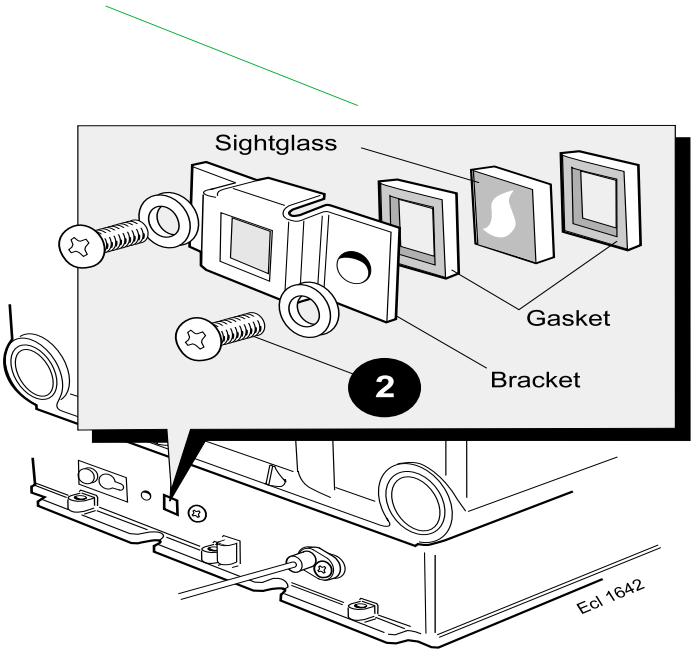

54 OVERHEAT THERMOSTAT REPLACEMENT

1. Refer to Frame 36.
2. Pull off the electrical leads from the thermostat body.
3. Pull the thermostat and clip from the pipe.
4. Fit the new thermostat, ensuring that the clip is securely holding the thermostat to the flow pipe.
5. Re-assemble in reverse order.
6. Check operation of the boiler. Refer to Frame 36.

Note.

Removal of the collector hood and flue spigot will facilitate better access.

WARNING.

Beware these components may be hot if the boiler has recently been run.

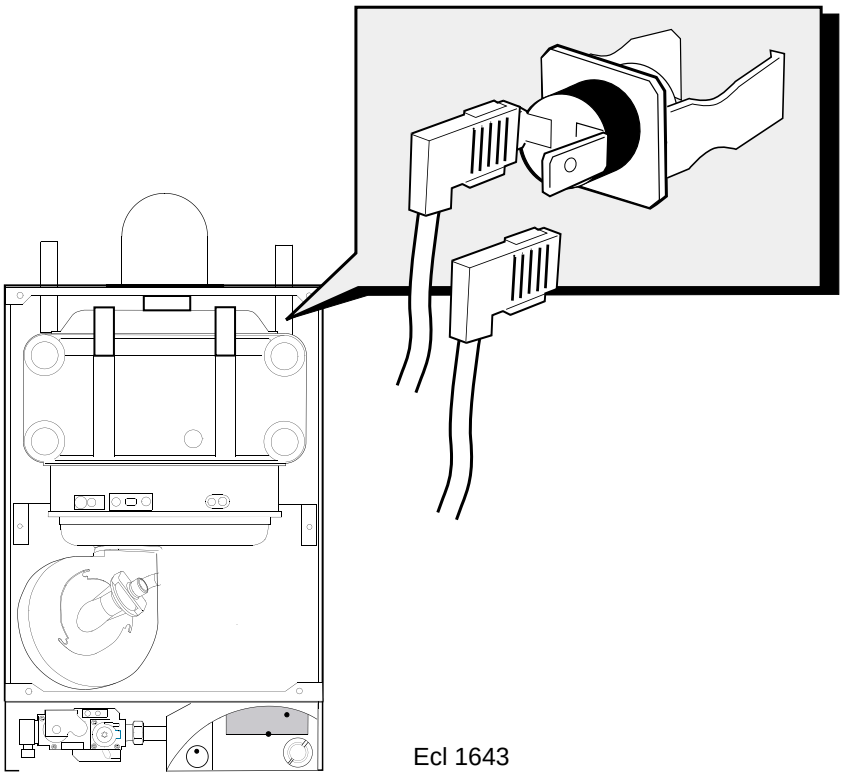

Ecl 1643

55 COMBUSTION CHAMBER INSULATION REPLACEMENT

The insulation boards used in the combustion chamber of this product are made of high temperature glass fibres with a binder of organic and inorganic materials.

Caradon Plumbing Limited recommend that, for your own comfort and safety and to comply with good working practise, the procedure described below is followed:

1. Refer to Frame 36.
2. Remove the fan / venturi assembly, as shown in Frame 39.
3. Remove the burner as shown in Frame 40.
4. Undo the retaining screw from the ignition electrode and withdraw it from the combustion chamber
5. Undo the retaining screw from the detection electrode and withdraw it from the combustion chamber.

   Prior to removal of the board the following protective equipment should be worn:

   - **Face mask supplied with the spare part**
   - **Gloves supplied with the spare part**
6. Damp down the combustion chamber area containing the insulation boards.
7. Remove the split pin and washer from the LHS of the combustion chamber.
8. Remove the insulation boards. The replacement boards are supplied in a plastic bag. This bag should be retained and the discarded boards should now be placed into it.
9. Sweep any dampened particles and place in the plastic bag.
10. Fit new insulation boards.

    Note. *The boards are designed to be interlocking and should be fitted as shown.*
11. Fit the new split pin and washer in the LHS of the combustion chamber.
12. Remove the gloves and face mask and place them in the plastic bag.
13. Wash your hands and any areas of skin which may have come into contact with any of the particles from the insulation board.

    Note. *Seal the plastic bag and dispose of it and its contents into a commercial tip.*
14. Reassemble in reverse order.
15. Check operation of the boiler. Refer to Frame 36.

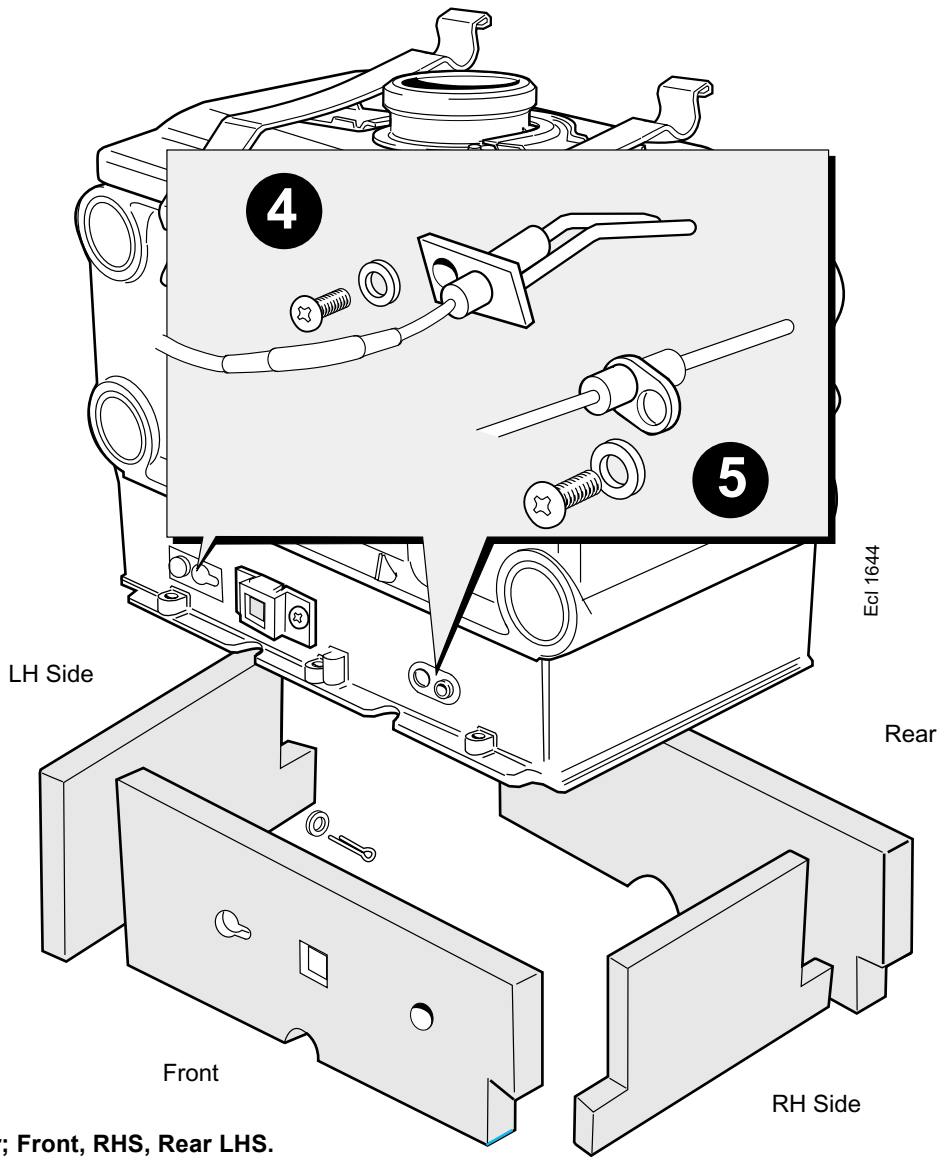

Fit in the following order; Front, RHS, Rear LHS.

57 HEAT ENGINE REPLACEMENT

Refer to Frame 'Exploded view'

1. Refer to Frame 36.
2. Remove the control box (refer to Frame 51) and place to one side.
3. Remove the fan assembly (refer to Frame 45) and place to one side.
4. Remove the burner (refer to Frame 46) and place to one side.
5. Remove the ignition and sensing electrodes (refer to Frames 47 & 48).
6. Remove the collector assembly (refer to Frame 58).
7. Remove the flue baffles (classic m5080 only).
8. Remove the control thermistor and over heat thermostat from the flow pipe.
9. Drain the boiler using the heat exchanger drain point.
10. Remove the 2 M5 x 10 screws from the bottom of the inter panel.
11. Slide the heat engine and inter panel assembly downwards to disengage and remove from the casing.
12. Reassemble in reverse order, replacing gaskets or seals if any sign of damage or deterioration is evident.

Note.

The heat engine is supplied with new combustion chamber insulation boards. These should be fitted (refer to Frame 55) before the burner, fan assemblies and before the ignition/sensing electrodes are replaced.

13. Check the operation of the boiler. Refer to Frame 36.

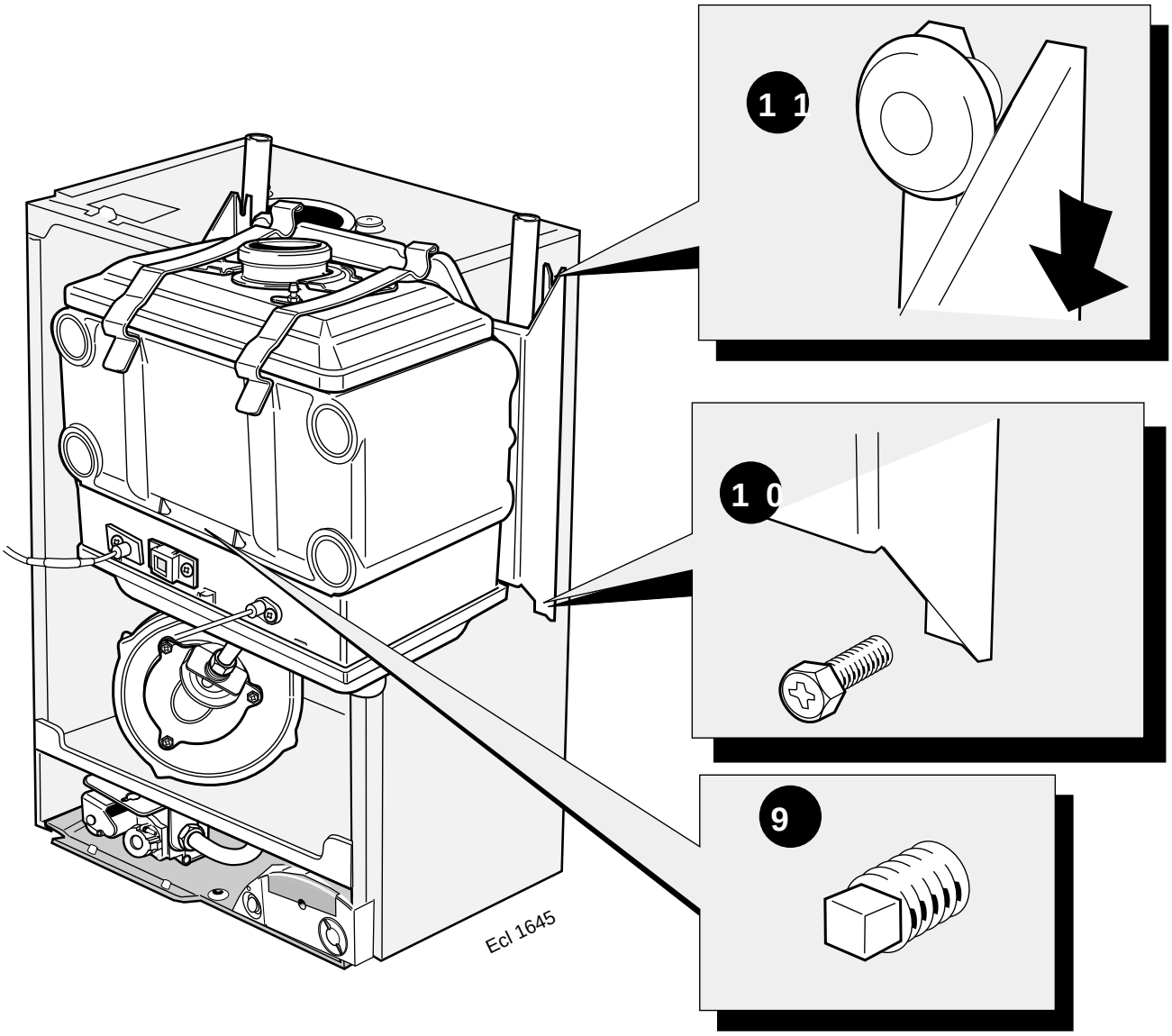

57 BOILER SEALING PANEL SEAL REPLACEMENT

Refer Frame 36.

1. Remove the 2 retaining screws from the underside of the appliance. Unhook and remove the front panel.
2. Undo the 4 screws to remove the panel.
3. Remove the old seal from the casing and thoroughly clean the casing surfaces.
4. Fit the new adhesive seals, note that they are supplied to the correct length for the relevant sides.
5. Reassemble in reverse order.

Note.
Ensure that the boiler sealing panel is correctly seated, compressing the seal to make an airtight joint.

6. Check operation of boiler. Refer Frame 36.

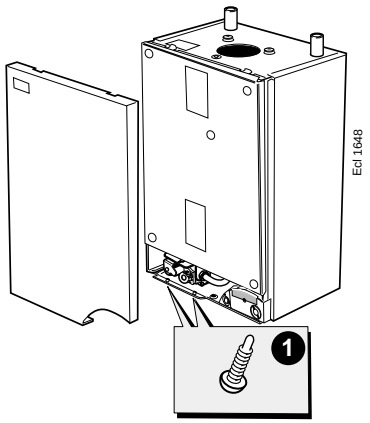

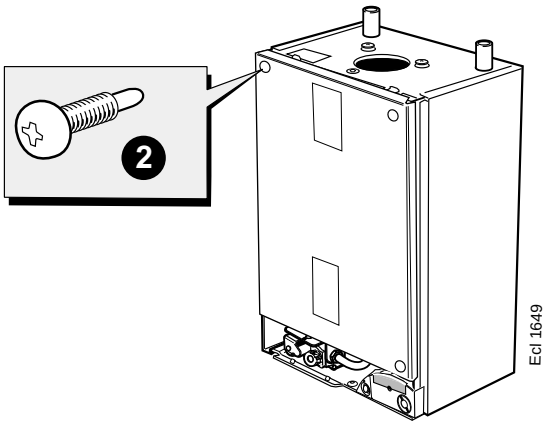

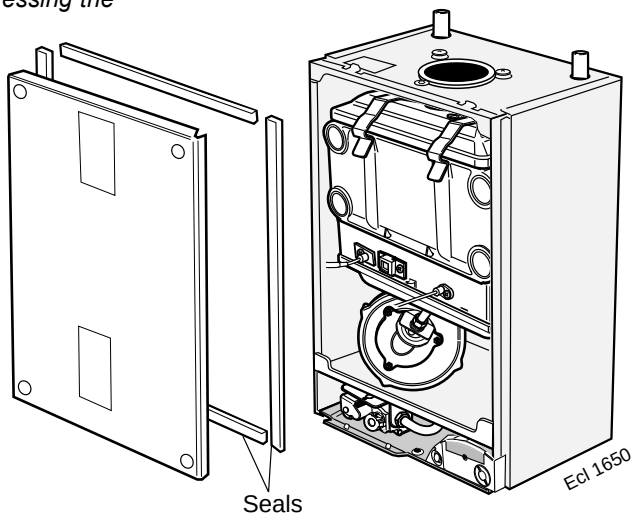

58 COLLECTOR HOOD REMOVAL

Refer to Frame 36.

1. Remove the 2 spring clips securing the collector hood to the heat exchanger.
2. Slide the flue spigot upwards into the flue turret to allow the collector hood to slide forwards.
3. Remove the collector hood.
4. Reassemble in reverse order ensuring the location tabs in the collector hood gasket fit into the inter panel locations.
5. Slide the flue spigot down from the flue turret and locate on the collector hood.
6. Fit the spring retaining clips.
7. Check operation of the boiler.
8. Refer to Frame 36.

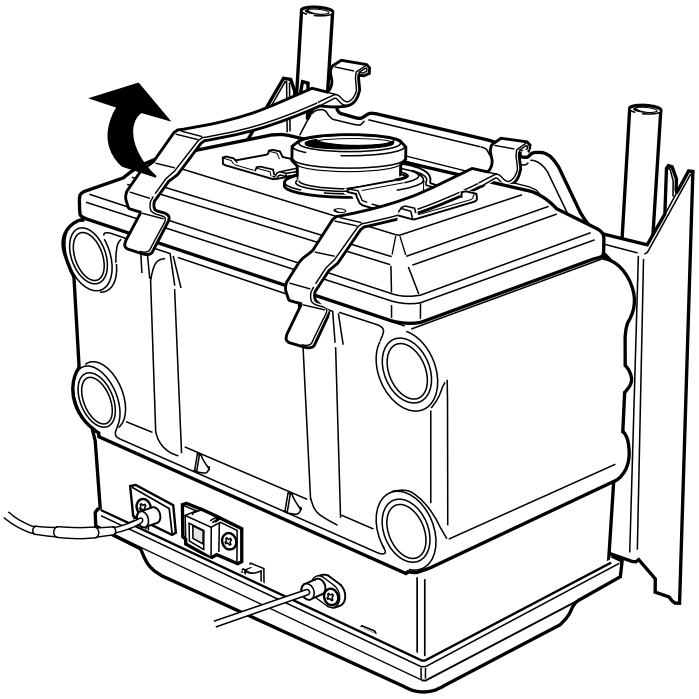

59 FAULT FINDING CHART MAIN MENU

In order to assist fault finding, the boiler has an LCD display. The key to the display codes is as follows:

ALTERNATING 'L' 'F'	GO TO FRAME 60
ALTERNATING 'L' 'E'	GO TO FRAME 61
ALTERNATING 'L' 'A'	GO TO FRAME 62
ALTERNATING 'L' '8'	GO TO FRAME 63
ALTERNATING 'H' '1'	GO TO FRAME 64
ALTERNATING 'H' 'F'	GO TO FRAME 65
ALTERNATING 'H' 'n'	GO TO FRAME 66
ALTERNATING 'H' 'E'	GO TO FRAME 61

60 L.....F.....(FLAME ERROR)

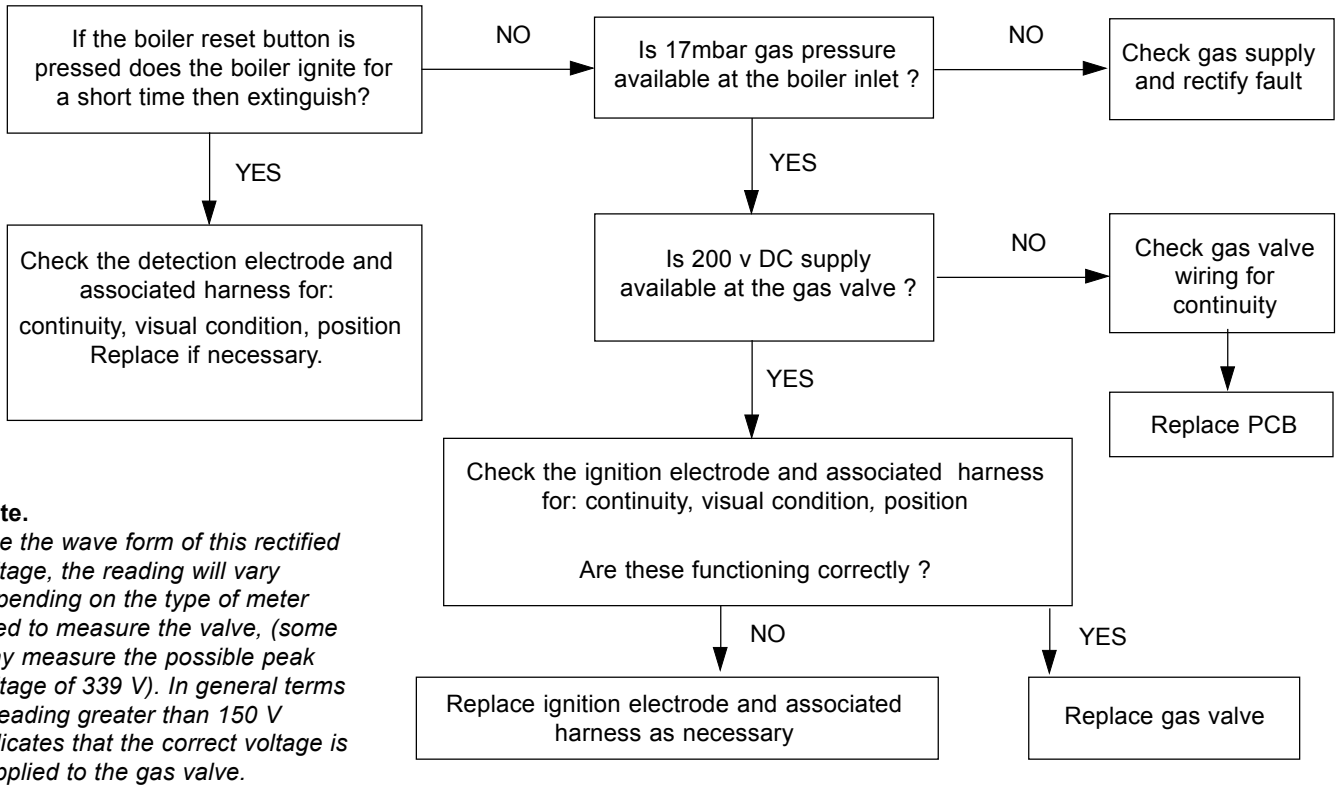

Note.
Due the wave form of this rectified voltage, the reading will vary depending on the type of meter used to measure the valve, (some may measure the possible peak voltage of 339 V). In general terms a reading greater than 150 V indicates that the correct voltage is supplied to the gas valve.

61 L.....E.....or H.....E. (BOARD ERROR)

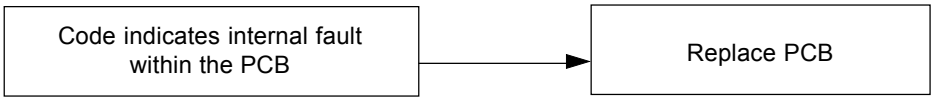

62 L.....A.....(OVER HEAT)

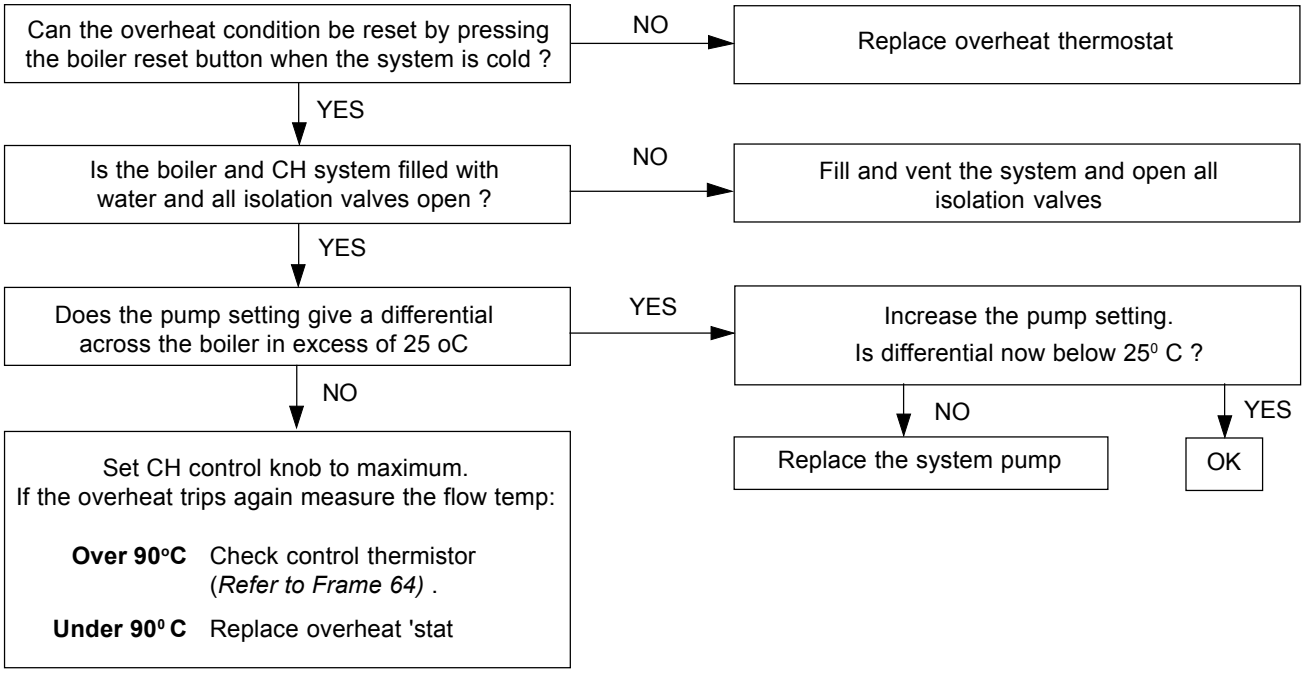

63 L....8..... (FAN)

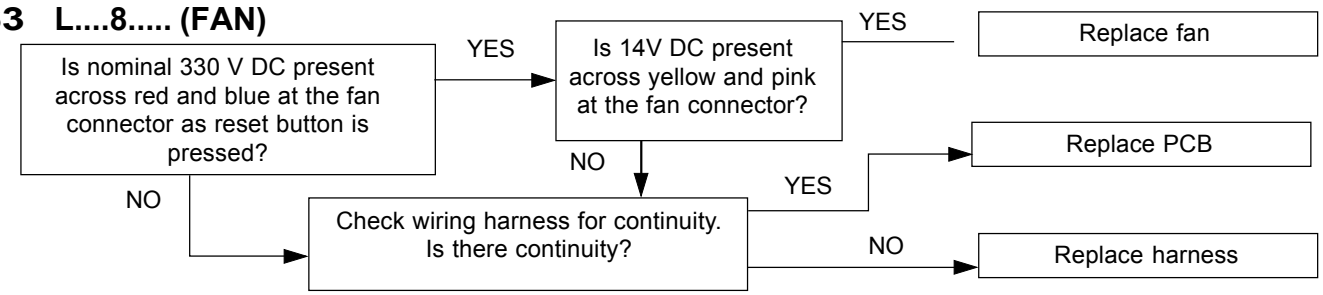

64 H.....1..... (FLOW TEMPERATURE)

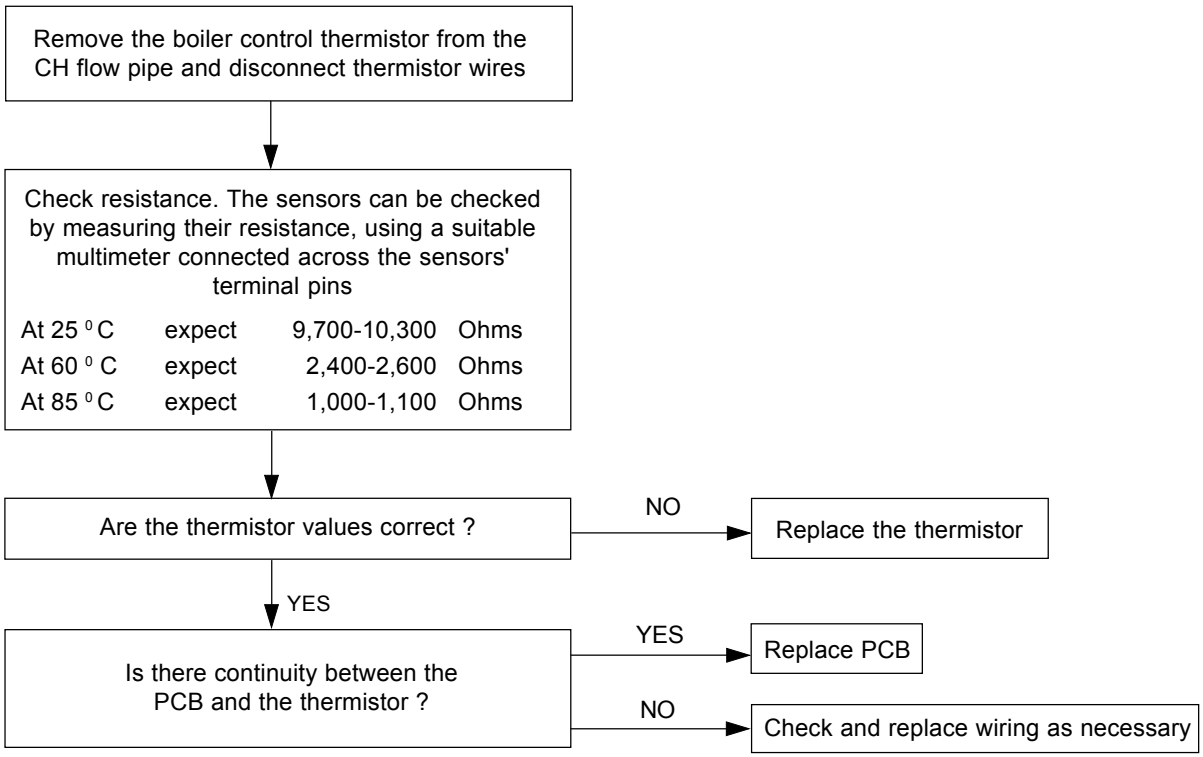

65 H.....F..... (FLAME DETECTION - SHORT CIRCUIT)

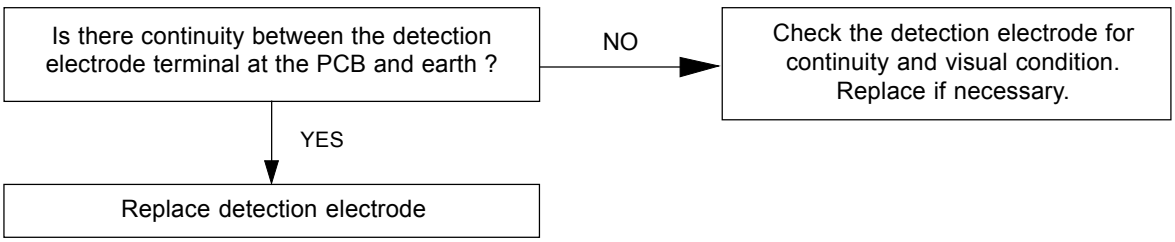

66 H.....n..... (PHASE REVERSAL)

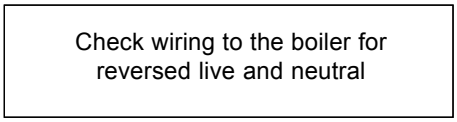

SHORT LIST OF PARTS

The following are parts commonly required due to damage or expendability. Their failure or absence is likely to affect safety or performance of this appliance.

The list is extracted from the British Gas List of Parts, which contains all available spare parts.

The full lists is held by **British Gas Services,** British Gas distributors and merchants.

When ordering spares please quote:

1. Boiler Model
2. Appliance G.C. Number
3. Description
4. Quantity
5. Product Number

When replacing a part on this appliance, use only spare parts that you can be assured conform to the safety and performance specification that we require. Do not use reconditioned or copy parts that have not been clearly authorised by Ideal Boilers.

Key No.	GC Part No.	Description		Qty.	Product No.
1	E67-471	Front casing panel		1	170 897
4	E69-260	Bottom cover panel	m3050	1	171 117
	E69-261	Bottom cover panel	m5080	1	171 118
6	E69-262	Baffle kit	m5080	1	171 133
11	E67-489	Burner		1	170 905
12	E67-490	Combustion chamber insulation		1	170 906
14	E69-270	Injector and housing		1	170 908
16	E69-271	Fan assembly		1	170 909
19	E67-497	Gas control valve - Honeywell VK115V		1	170 913
23	E67-501	Control thermistor		1	170917
24	E67-502	Overheat thermostat		1	170918
25	E67-503	Ignition electrode and gasket		1	170 919
26	E67-504	Flame sensing electrode and gasket		1	170 920
35	E67-517	Users controls		1	170 929
36	E67-518	PCB primary controls (include plastic housing)		1	170 930
37	E67-519	Fuse PCB (3.15A L250V)		1	170 931
39	E67-521	Main switch		1	170 933
42	E67-524	Sightglass assembly kit		1	170 949
45	E67-527	Gasket kit		1	170 398
52	E68-376	Sealing kit		1	171 014
53	E68-380	Turret gasket		1	171 022

67 SHORT LIST OF PARTS

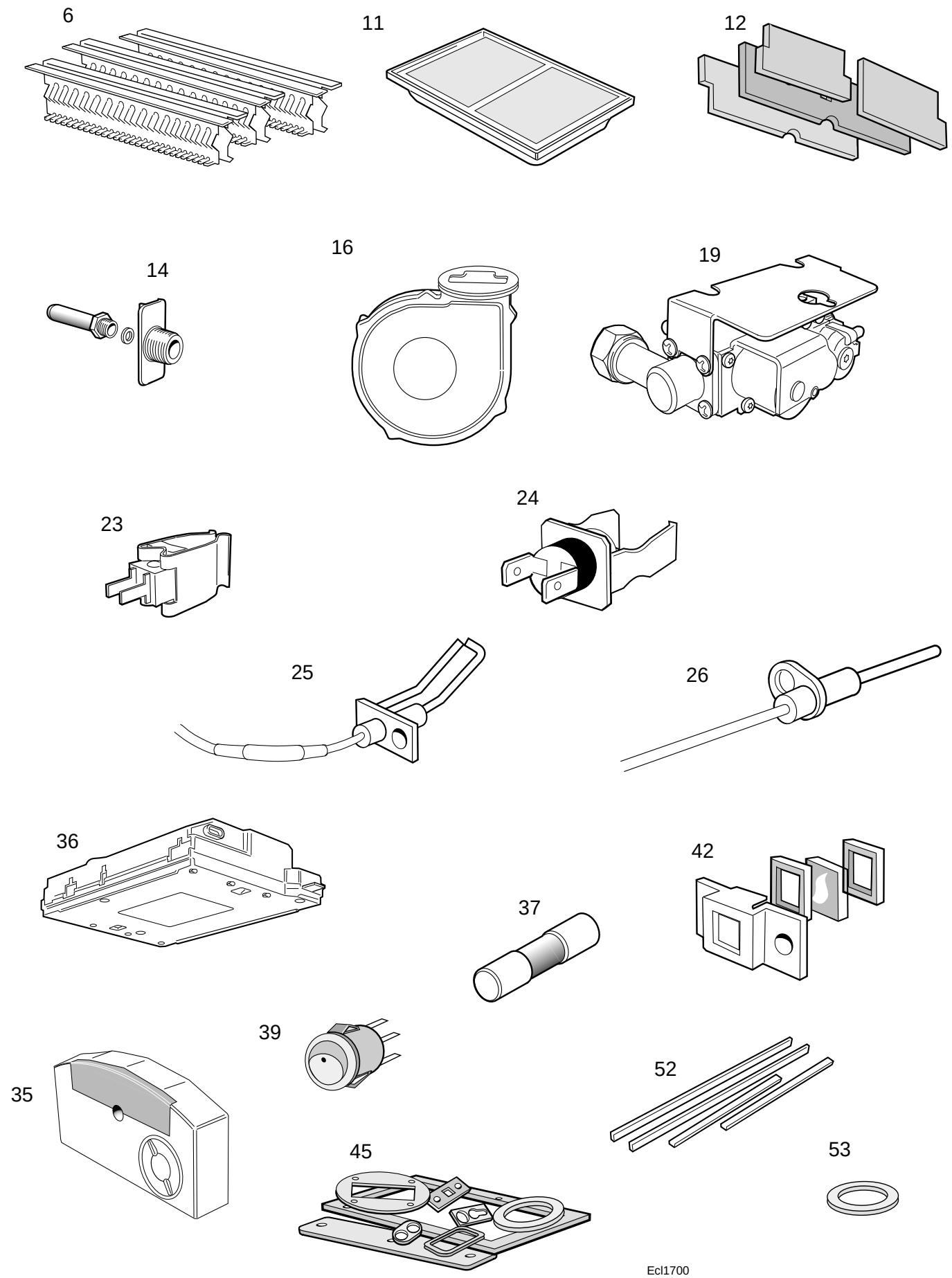

68 CASE ASSEMBLY

1. Front casing panel with screws.

2. Sealing panel with screws.

4. Bottom panel with screws.

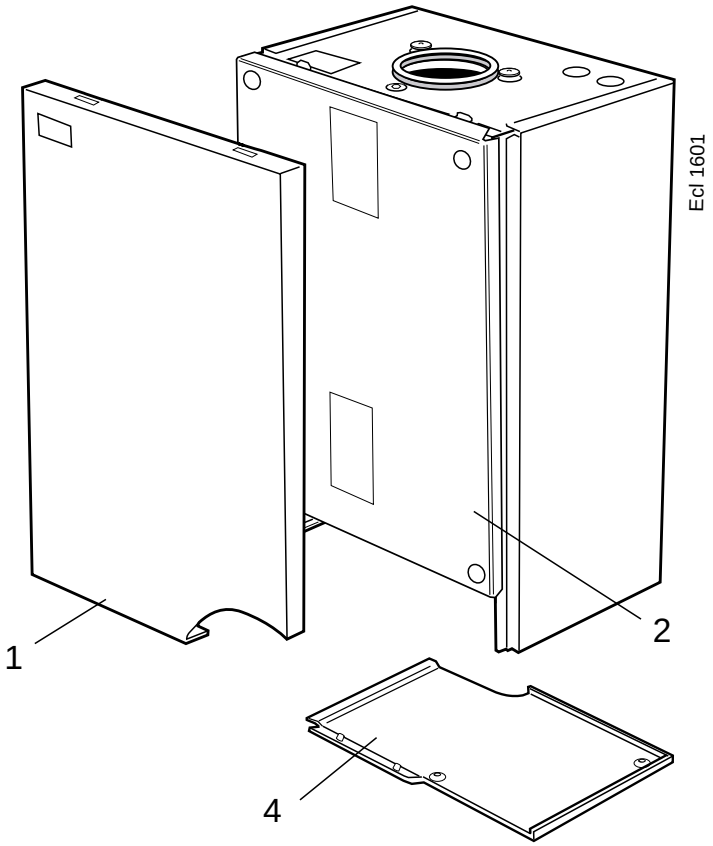

69 BURNER ASSEMBLY

11. Burner assembly with screws and gasket.

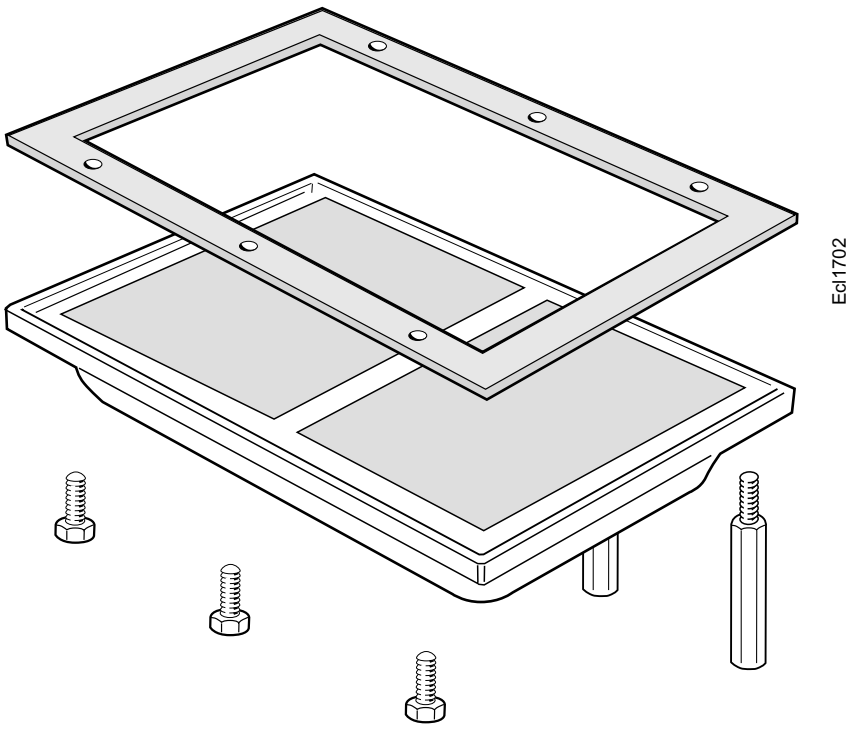

70 CONTROLS ASSEMBLY

33. Controls assy complete with screws.

34. Controls hinge bracket.

35. User controls (without item 38).

36. PCB (primary controls).

38. User controls housing kit.

54. Jumper link.

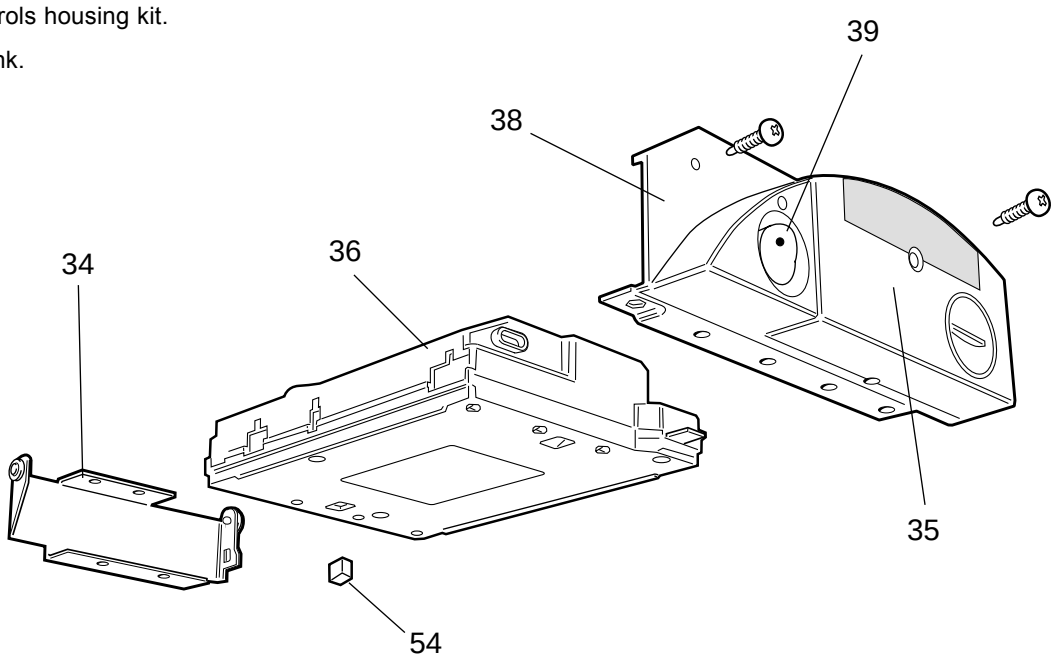

Ecl 1600

benchmark™

The code of practice for the installation, commissioning & servicing of central heating systems

Technical Training

The Caradon Plumbing Limited Technical Training Centre offers a series of first class training courses for domestic, commercial and industrial heating installers, engineers and system specifiers.
For details of courses please ring: *01482 498432*

CERTIFIED PRODUCT
Manufactured under a BS EN ISO 9001: 1994 Quality System accepted by BSI

Caradon Plumbing Ltd. P.O. Box 103, National Ave., Kingston upon Hull, HU5 4JN. Telephone: 01482 492 251 Fax: 01482 448 858. Registration No. London 322 137.

Caradon Plumbing Ltd. pursues a policy of continuing improvement in the design and performance of its products. The right is therefore reserved to vary specification without notice.

CE

Ideal BOILERS

June 2001 156124 A01

Caradon
Plumbing Solutions

Ideal Care Helpline Tel: 01482 498 663
www.idealboilers.com