installation and servicing

Classic

Your Ideal installation and servicing guide

See reverse for **Classic** users guide

SE9 RS, SE12 RS, SE15 RS & SE18 RS

spares & parts online
IBASIS.co.uk©

When replacing any part on this appliance use only spare parts that you can be assured conform to the safety and performance specification that we require. Do not use reconditioned or copy parts that have not been clearly authorised by Ideal Boilers.

December 2003 UIN 200 547 A02

Ideal BOILERS
ENGINEERED FOR PEACE OF MIND

GENERAL

Table 1 - General Data

Boiler Size			SE9 RS	SE12 RS	SE15 RS	SE18 RS
Gas supply connection			Rc 1/2 (1/2) 1/2" (BSP Female)			
Flow connection			22mm copper			
Return connection			22mm copper			
Maximum static water head		m (ft.)	30.5 (100)			
Minimum static water head		m (ft.)	0.45 (1.5)			
Electrical supply			230 V 50 Hz			
Fuse rating			External: 3A			
Water content		litre (gal.)	3.65 (0.8)		4.6 (1.0)	
Dry Weight		kg (lb.)	42.0 (93.0)		48.0 (105.0)	
Maximum installation weight		kg (lb.)	34.0 (75.0)		40.0 (88.0)	
Boiler size	Height	mm (in.)	600 (23.6)			
	Width	mm (in.)	380 (15.0)			
	Depth	mm (in.)	300 (11 3/4")			

Table 2 - Performance Data

Boiler Size		SE9 RS	SE12 RS	SE15 RS	SE18 RS
Boiler input	kW	10.9	14.5	17.8	21.7
	(Btu/h)	(37 200)	(49 500)	(60 750)	(74 000)
Gas consumption	l/s (ft^3/h)	0.28 (36.1)	0.38 (48.2)	0.46 (58.6)	0.56 (71.3)
Boiler output	kW	8.8	11.7	14.7	17.6
	(Btu/h)	(30 000)	(40 000)	(50 000)	(60 000)
Burner setting pressure (HOT)	mbar (in.w.g.)	6.4 (2.6)	11.0 (4.4)	13.1 (5.3)	14.1 (5.7)
Seasonal Efficiency (SEDBUK)*	Band D	[78.4]%	[78.9]%	[80.3]%	[79.0]%

* The value is used in the UK Government's Standard Assessment Procedure (SAP) for energy rating of dwellings. The test data from which it has been calculated have been certified by a notified body.

To obtain gas consumption

(a) For l/s: divide heat input (kW) by C.V. of the gas (MJ/m^3)

(b) For ft^3/h; divide by C.V. of the gas (Btu/ft^3).

Heat inputs are preset to the highest nominal rating.

CAUTION. To avoid the possibility of injury during the installation, servicing or cleaning of this appliance, care should be taken when handling edges of sheet steel components

Classic SE RS

Natural Gas only: I_{2H}

Data Badge: on top of the controls support
B.G. Certified - P.I. No. 87AP108
Destination Countries: GB & IE Appliance type: C_{11} Only

Models	G.C. Appliance No.
Classic SE9 RS	41 395 44
Classic SE12 RS	41 395 45
Classic SE15 RS	41 395 46
Classic SE18 RS	41 395 99

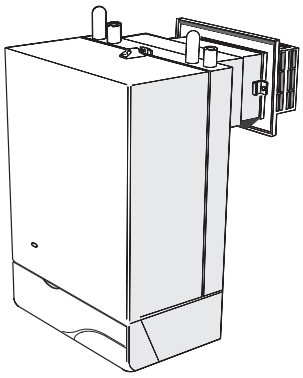

Key to symbols

IE = Ireland
GB = United Kingdom

PMS = Maximum operating pressure of water

C_{11} = A room sealed appliance designed for connection via ducts to a horizontal terminal, which admits fresh air to the burner and discharges the products of combustion to the outside through orifices which, in this case, are concentric.

I_{2H} = An appliance designed for use on 2nd Family gas, Group H only.

CONTENTS

Air Supply 6
Boiler Assembly - Exploded view 8
Boiler Clearances 5
Burner Assembly - Exploded view 31
Electrical Connections 15
Electrical Diagram 15
Electrical Supply 7
Fault Finding 28
Flue Fitting 14
Flue Installation 6
Gas Safety Regulations 4
Gas Supply 6
Health & Safety Document No 635 4
Initial Lighting 19
Installation 8
Mandatory Requirements 4
Pump 10
Servicing 21
Short List of Parts 29
System Diagrams 16
Terminal Guards 6
Water and Systems 7

For GB, to comply with Building Regulations Part L1 (Part J in Scotland) the boiler should be fitted in accordance with the manufacturer's instructions. Self-certification that the boiler has been installed to comply with Building Regulations can be demonstrated by completing and signing the Benchmark log book.

BENCHMARK LOG BOOK DETAILS

Boiler	**Page**
Make and model	3
Appliance serial no. on data badge	8
SEDBUK No. %	2
Controls	
Time and temperature control to heating	16/17
Time and temperature control to hot water	16/17
Heating zone valves	16/17
TRV's	7
Auto bypass	7
Boiler interlock	7
For all boilers	
Flushing to BS.7593	7
Inhibitor	7
Central heating mode	
Heat input	to be calculated

	Page
Burner operating pressure	measure and record
Central heating flow temp.	measure and record
Central heating return temp.	measure and record
For combination boilers only	
Scale reducer	n/a
Hot water mode	
Heat input	n/a
Max. operating burner pressure	n/a
Max. operating water pressure	n/a
Cold water inlet temp	n/a
Hot water outlet temp.	n/a
Water flow rate at max. setting	n/a
For condensing boilers only	
Condensate drain	n/a

For all boilers: *complete, sign & hand over to customer*

For assistance see Technical Helpline on the back page

INTRODUCTION

The **Classic SE9 RS, SE12 RS, SE15 RS and SE18 RS** is a range of automatically fully controlled, wall mounted, balanced flue, gas boilers.

The boiler casing is of white enamelled mild steel.

The boilers are supplied with a standard flue kit, suitable for rear outlet applications from 229mm (9") to 305mm (12").

The boilers are suitable for connection to pumped, open vented central heating systems; pumped central heating combined with pumped or gravity indirect domestic hot water systems; gravity or pumped indirect domestic hot water supply systems.

See Frame 1 for details of the correct boiler tappings to use.

The boiler casing has a removable controls pod containing a drop-down door. The boiler thermostat is located behind the drop-down door.

This boiler may require 2 operatives to move it to its installation site, remove it from its packaging base and during movement into its installation location. Manoeuvring the boiler may include the use of a sack truck and involve lifting, pushing and pulling.

Caution should be exercised during these operations.

Operatives should be knowledgeable in handling techniques when performing these tasks and the following precautions should be considered:

- Grip the boiler at the points shown in Frame 14.
- Split the boiler down to reduce the weight, e.g. remove casing and hardware pack. Refer to Frame 5.
- Be physically capable.
- Use PPE as appropriate, e.g. gloves, safety footwear.

During all manoeuvres and handling actions, every attempt should be made to ensure the following unless unavoidable and/or the weight is light.

- Keep back straight.
- Avoid twisting at the waist.
- Avoid upper body/top heavy bending.
- Always grip with the palm of the hand.
- Use designated hand holds.
- Keep load as close to the body as possible.
- Always use assistance if required.

OPTIONAL EXTRA KITS

Programmer kit	fits neatly within the casing. Separate fitting instructions are included with this kit.
Extension ducts	up to 394 mm (15 1/2").
Overheat Thermostat Kit	allows the boiler to be used on sealed systems.
Sealed System Unit	fits on top of the appliance

GAS SAFETY

CURRENT GAS SAFETY (INSTALLATION AND USE) REGULATIONS OR RULES IN FORCE.

The appliance is suitable only for installation in GB and IE and should be installed in accordance with the rules in force.

In GB, the installation must be carried out by a CORGI Registered Installer. It must be carried out in accordance with the relevant requirements of the:

- Gas Safety (Installation and Use) Regulations
- The appropriate Building Regulations either The Building Regulations, The Building Regulations (Scotland), Building Regulations (northern Ireland).
- The Water Fittings Regulations or Water byelaws in Scotland.
- The Current I.E.E. Wiring Regulations.

Where no specific instructions are given, reference should be made to the relevant British Standard Code of Practice.

In IE, the installation must be carried out by a Competent Person and installed in accordance with the current edition of I.S.813 "Domestic Gas Installations", the current Building Regulations and reference should be made to the current ETCI rules for electrical installation.

Detailed recommendations are contained in the following British Standard Codes of Practice:

BS. 6891	Low pressure installation pipes.
BS. 6798	Installation of gas fired hot water boilers of rated input not exceeding 60 kW.
BS. 5449	Forced circulation hot water systems.
BS. 5546	Installation of gas hot water supplies for domestic purposes (2nd Family Gases).
BS. 5440: Part 1	Flues for gas appliances of rated input not exceeding 60 kW.
BS. 5440: Part 2	Ventilation for gas appliances of rated input not exceeding 60 kW.
BS 7593	Treatment of water in Domestic Hot Water Central Heating Systems.

Health & Safety Document No. 635.

The Electricity at Work Regulations, 1989.

Manufacturer's notes must NOT be taken in any way as overriding statutory obligations.

IMPORTANT. These appliances are certificated by the British Standards Institution for safety and performance. It is important, therefore, that no external control devices, e.g. flue dampers, economisers etc., are directly connected to these appliances unless covered by these Installation and Servicing instructions or otherwise recommended by **Caradon Ideal Limited** in writing. If in doubt please enquire.

Any direct connection of a control device not approved by **Caradon Ideal Limited** could invalidate the BSI Certification and the normal appliance warranty. It could also infringe the Gas Safety Regulations and the above regulations.

SAFE HANDLING OF SUBSTANCES

Care should be taken when handling the boiler insulation panels, which can cause irritation to the skin. No asbestos, mercury or CFCs are included in any part of the boiler.

NOTE TO THE INSTALLER: LEAVE THESE INSTRUCTIONS ADJACENT TO THE GAS METER. ALSO COMPLETE THE BENCHMARK LOG BOOK AND GIVE THIS TO THE CUSTOMER.

benchmark™

LOCATION OF BOILER

The boiler must be installed on a flat and vertical wall, capable of adequately supporting the weight of the boiler and any ancillary equipment.

The boiler may be fitted on a combustible wall and insulation between the wall and the boiler is not necessary - unless required by the local authority.

The boiler must not be fitted outside.

Timber Framed Buildings

If the boiler is to be fitted in a timber framed building it should be fitted in accordance with the Institute of Gas Engineering document IGE/UP/7:1998.

Bathrooms

The boiler may be installed in any room or internal space, although particular attention is drawn to the requirements of the current I.E.E. (BS 7671) Wiring Regulations and, in Scotland, the electrical provisions of the building regulations applicable in Scotland with respect to the installation of the boiler in a room or internal space containing a bath or shower. For Ireland reference should be made to the current ETCI rules for electrical installations and I.S. 813: 2002.

Where a room-sealed appliance is installed in a room containing a bath or shower then the appliance and any electrical switch or appliance control utilising mains electricity should be so situated that it cannot be touched by a person using the bath or shower.

Where installation will be in an unusual location, special procedures may be necessary and BS.6798 gives detailed guidance on this aspect.

.....continued on page 6.

1 BOILER WATER CONNECTIONS

1. This appliance is NOT suitable for use in a direct hot water system.
2. If the boiler is to be used on a sealed system, an **Overheat Thermostat Kit** is available and must be installed in accordance with the instructions supplied with the kit.
3. If the boiler is to be used for gravity domestic hot water supply then cut off the spun ends of the gravity flow and return pipes and fit a 22 mm to 28 mm copper connection at the boiler gravity flow and return connections, in order to run the gravity circuits in 28 mm pipe.

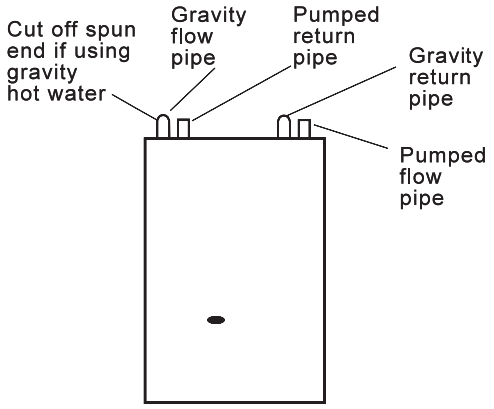

2 BOILER CLEARANCES

The following minimum clearances must be maintained for operation and servicing. Additional space will be required for installation, depending upon site conditions.

If using the **Classic Sealed System Unit** then refer to the instructions packed with the unit for the necessary clearances.

Front clearance: 450mm (17 3/4") from the front of the boiler casing.

Minimum front clearance when built in to cupboard is 75mm (3")

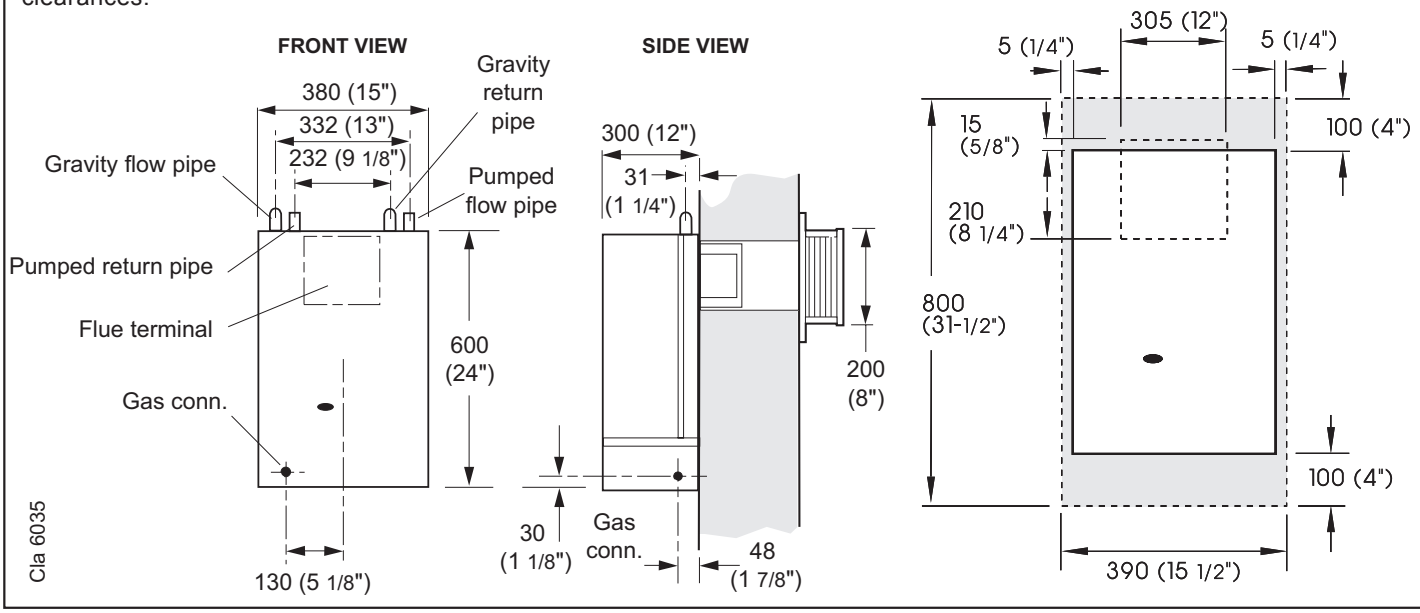

Compartment Installations

A compartment used to enclose the boiler MUST be designed and constructed specially for this purpose. An existing cupboard or compartment may be used, providing it is modified for the purpose.

In both cases details of essential features of cupboards/ compartment design, including airing cupboard installation, are to conform to the following:

- BS. 6798.
- The position selected for installation MUST allow adequate space for servicing in front of the boiler and for air circulation around the boiler; see section on 'Air Supply'.
- For the minimum clearances required for safety and subsequent service, see Frame 2. In addition, sufficient boiler clearance may be required to allow lifting access to the wall mounting plate.

GAS SUPPLY

The local gas supplier should be consulted, at the installation planning stage, in order to establish the availability of an adequate supply of gas. An existing service pipe must NOT be used without prior consultation with the local gas supplier.

A gas meter can only be connected by the local gas supplier or by a local regional contractor.

An existing meter should be checked, preferably by the gas supplier, to ensure that the meter is adequate to deal with the rate of gas supply required. A **minimum** gas pressure of 20 mbar MUST be available at the boiler inlet, with the boiler operating.

Installation pipes MUST be fitted in accordance with BS. 6891. In IE refer to I.S. 813:2002. Pipework from the meter to the boiler MUST be of an adequate size.

The complete installation MUST be tested for gas soundness and purged as described in the above code.

FLUE INSTALLATION

Pluming may occur at the terminal so terminal positions which would cause a nuisance should be avoided.

The flue must be installed in accordance with the recommendations of BS. 5440-1:2000. In IE refer to I.S. 813:2002.

The following notes are intended for general guidance:-

1. The boiler MUST be installed so that the terminal is exposed to external air.
2. It is important that the position of the terminal allows the free passage of air across it at all times.
3. Minimum acceptable spacing from the terminal to obstructions and ventilation openings are specified in Table 3.
4. Where the lowest part of the terminal is fitted less than 2m

   (6' 6") above a balcony, above ground or above a flat roof to which people have access then the terminal MUST be protected by a purpose designed guard.

   Terminals guards are available from boiler suppliers. Ask for TFC Flue Guard, Model A. In case of difficulty seek advice from:

   Grasslin (UK) Ltd., Tower House, Vale Rise, Tonbridge, Kent TN9 1TB.
   Tel: +44 (0) 1732 359 888. Fax: +44 (0) 1732 354 445
   www.tfc-group.co.uk

   Ensure that the guard is fitted centrally.

Table 3 - Balanced flue terminal position

Terminal Position	Minimum Spacing 330-340	Minimum Spacing 350-360
1a. Directly BELOW an opening, air brick, opening window etc.	600mm (24")	1500mm (60")
1b. Directly ABOVE an opening, air brick, opening window etc.	300mm (12")	300mm (12")
1c. HORIZONTALLY to an opening, air brick, opening window etc.	400mm (16")	600mm (24")
2. Below guttering, drain pipes or soil pipes	300 mm (12")	
3. Below eaves	300 mm (12")	
4. Below balconies or a car port roof	600 mm (24")	
5. From vertical drain pipes or soil pipes	300 mm (12")	
6. From an internal or external corner or to a boundary alongside the terminal	600 mm (24")	
7. Above adjacent ground, roof or balcony level	300 mm (12")	
8. From a surface or a boundary facing the terminal	600 mm (24")	
9. From a terminal facing a terminal	600 mm (24")	
10. From an opening in a car port (e.g. door or window) into dwelling	1200 mm (48")	
11. Vertically from a terminal on the same wall	1500 mm (60")	
12. Horizontally from a terminal on the wall	300 mm (12")	

5. If a natural draught terminal is fitted less than 1m below a plastic gutter or less than 0.5m below painted eaves or any other painted surface a suitable shield at least 1m long should be fitted to protect the surface.
6. The air inlet/products outlet duct and the terminal of the boiler MUST NOT be closer than 25mm (1") to combustible material. Detailed recommendations on the protection of combustible material are given in BS.5440-1:2000. In IE refer to I.S. 813:2002.

IMPORTANT. It is absolutely ESSENTIAL to ensure, in practice, that products of combustion discharging from the terminal cannot re-enter the building or any other adjacent building through ventilators, windows, doors, other sources of natural air infiltration or forced ventilation/air conditioning.

If this should occur, the appliance MUST be turned OFF, labelled 'unsafe' and corrective action taken.

TERMINAL

The terminal assembly can be adapted to accommodate various wall thicknesses. Refer to Frame 4 - Unpacking.

AIR SUPPLY

Detailed recommendations for air supply are given in BS.5440:2. In IE refer to I.S. 813:2002.

The following notes are for general guidance:

1. It is NOT necessary to have a purpose provided air vent in the room or internal space in which the boiler is installed.
2. If the boiler is to be installed in a cupboard or compartment, permanent air vents are required (for cooling purposes) in the cupboard/compartment, at both high and low levels. The air vents must either communicate with room/internal space, or be direct to outside air. The minimum effective areas of the permanent air vents, required in the cupboard/compartment, are specified in Table 4 and are related to maximum rated heat input.

3. Both air vents MUST communicate with the same room or internal space or MUST be on the same wall to outside air.

4. In siting the air vents care must be taken to avoid the freezing of pipework.

Table 4 - High and low vent areas

Boiler	Air from room/internal Space cm² (in.²)	Air direct Outside cm² (in.²)
SE9 RS	102 (16)	51 (8)
SE12 RS	135 (21)	68 (11)
SE15 RS	170 (26)	83 (13)
SE18 RS	198 (31)	102 (16)

WATER CIRCULATION SYSTEM

The boiler must NOT be used for direct hot water supply. For the types of system and correct piping procedure refer to 'Introduction' and Frame 1.

The central heating system should be in accordance with BS. 6798 and, in addition, for smallbore and microbore systems, BS. 5449.

The domestic hot water system, if applicable, should be in accordance with the relevant recommendations of BS. 5546. Copper tubing to BS. 2871:1 is recommended for water carrying pipework.

The hot water storage cylinder MUST be of the indirect type and should preferably be manufactured of copper.

Single feed, indirect cylinders are not recommended and MUST NOT be used on sealed systems.

The hot water cylinder and ancillary pipework not forming part of the useful heating surface should be lagged to prevent heat loss and any possible freezing - particularly where pipes run through roof spaces and ventilated underfloor spaces.

IMPORTANT. The boiler must be vented *(not on sealed systems.) For sealed system installations copper tubing to BS2871:1 MUST be used throughout the heating system*

Draining taps MUST be located in accessible positions, which permit the draining of the whole system - including the boiler and hot water storage vessel. They should be at least 1/2" BSP nominal size and be in accordance with BS. 2879.

The boiler is fitted with a special drain plug (provided) to drain the BOILER ONLY, in the event of the system drain plug being unable to do so. The hydraulic resistance of the boilers, at MAXIMUM OUTPUT with an 11°C (20 °F) temperature differential, are shown in Table 5.

Table 5 - Water flow rate and pressure loss

Boiler Size		SE9 RS	SE12 RS	SE15 RS	SE18 RS
Boiler	kW	8.8	11.7	14.7	17.6
Output	Btu/h	30 000	40 000	50 000	60 000
Water flow	l/min	11.4	15.2	19.0	22.9
Rate	gal/h	150	200	250	300
Pressure	mbar	16.5	22.0	37.5	45
Loss	in wg	6.6	9.0	15	18

WATER TREATMENT

These boilers incorporate a cast iron heat exchanger.

IMPORTANT. The application of any other treatment to this product may render the guarantee of **Caradon Ideal Limited** INVALID.

Caradon Ideal Limited recommend Water Treatment in accordance with the *Benchmark* Guidance Notes on Water Treatment in Central Heating Systems.

Caradon Ideal Limited recommend the use of Fernox, GE Betz Sentinel or Salamander water treatment products, which must be used on accordance with the manufacturers instructions.

For further information contact:

Fernox Manufacturing Co. Ltd, Cookson Electronics, Forsyth Road, Sheerwater, Woking, Surrey. GU21 5RZ. Tel. +44 (0) 1799 521133

or

G E Betz Ltd, Sentinel Division, Foundry Lane, Widnes, Cheshire, WA8 8UD. Tel. +44 (0) 151 424 5351

or

Salamander Engineering Ltd, Unit 24, Reddicap Trading Estate, Sutton Coldfield, West Midlands B75 7BU. Tel. +44 (0) 121 378 0952

Notes.

1. *It is most important that the correct concentration of the water treatment products is maintained in accordance with the manufacturers' instructions.*

2. *If the boiler is installed in an existing system any unsuitable additives MUST be removed by thorough cleansing. BS7593:1992 details the steps necessary to clean a domestic heating system.*

3. *In hard water areas, treatment to prevent limescale may be necessary - however the use of artificially softened water is NOT permitted.*

4. *Under no circumstances should the boiler be fired before the system has been thoroughly flushed.*

BOILER CONTROL INTERLOCKS

Caradon Ideal Limited recommend that heating systems utilising full thermostatic radiator valve control of temperature in individual rooms should also be fitted with a room thermostat controlling the temperature in a space served by radiators not fitted with such a valve as stated in BS. 5449.

Central heating systems controls should be installed to ensure the boiler is switched off when there is no demand for heating or hot water.

When thermostatic radiator valves are used, the space heating temperature control over a living / dining area or hallway having a heating requirement of at least 10% of the boiler heat output should be achieved using a room thermostat, whilst other rooms are individually controlled by thermostatic radiator valves. However, if the system employs thermostatic radiator valves on all radiators, or two port valves without end switches, then a bypass circuit must be fitted with an automatic bypass valve to ensure a flow of water should all valves be in the closed position.

ELECTRICAL SUPPLY

Wiring external to the appliance MUST be in accordance with the current I.E.E. (BS. 7671) Wiring Regulations and any local regulations which apply. For Ireland reference should be made to the current ETCI rules for electrical installations.

The point of connection to the mains should be readily accessible and adjacent to the boiler, except for bathroom installations; the point of connection to the mains MUST be situated outside of the bathroom.

Note. *Where a room sealed appliance is installed in a room containing a bath or shower then the appliance and any electrical switch or appliance control utilising mains electricity should be so situated that it cannot be touched by a person using the bath or shower.*

3 BOILER ASSEMBLY - Exploded View

Classic SE9 RS shown

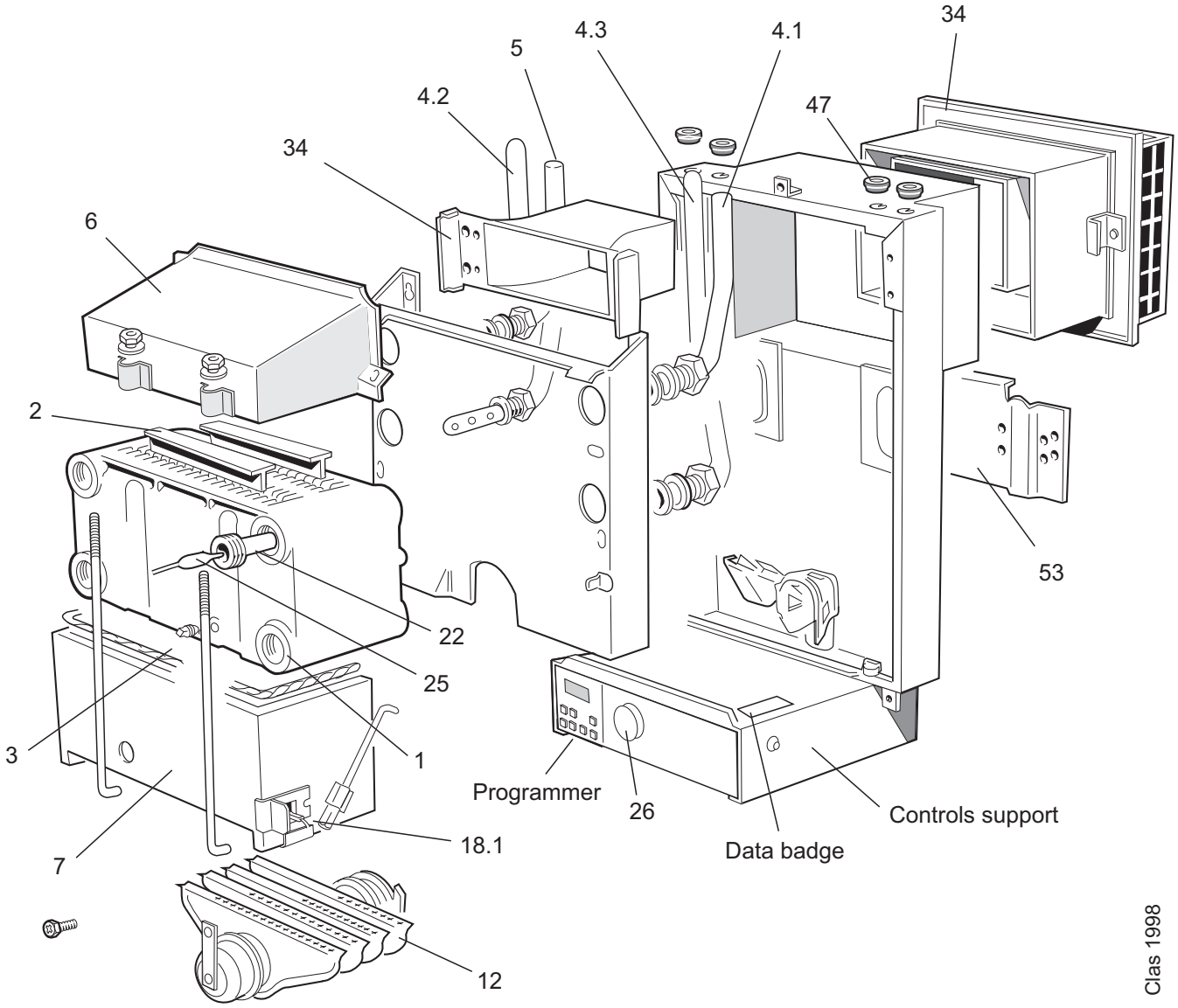

LEGEND

1.	Heat exchanger	**5.**	Pipe - Return assy.	**25.**	Boiler thermostat
2.	Flue baffles	**6.**	Collector hood	**26.**	Control thermostat knob
3.	Hook bolt kit assy.	**7.**	Combustion chamber	**34.**	Balanced flue terminal
4.1	Pipe - RH flow	**12.**	Main burner	**44B.**	Programmer (optional)
4.2	Pipe - LH flow	**18.1.**	Detection electrode	**47.**	Gasket, grommet & bush kit
4.3	Pipe - Return	**22.**	Thermostat pocket	**53.**	Wall mounting plate

4 UNPACKING

The boiler is supplied fully assembled in Pack A, together with a standard flue assembly for lengths up to 305mm (12") in Pack B.

Unpack and check the contents.

Pack A Contents

- Hardware Pack (listed below)
- Installation & Servicing Instructions
- User's Instructions.

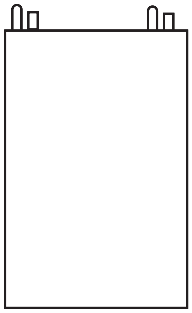

Complete boiler

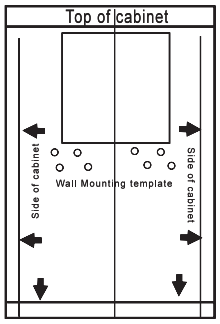

Wall mounting template

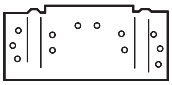

Wall mounting plate

Hardware Pack

- 50mm x No. 14 wood screw - 3 off
- 50mm x No. 10 wood screw - 3 off
- Wall plug - 6 off
- Cover plate, painted

FLUE PACKS

Note. *All flue packs contain 2 sachets of sealant*

PACK B - contains a balanced flue terminal suitable for wall thicknesses from 229mm (9") to 305mm (12")

PACK B1 - contains a balanced flue terminal suitable for wall thicknesses from 318mm (12 1/2") to 394mm (15 1/2")

PACK C - contains a balanced flue terminal suitable for wall thicknesses from 114mm (4 1/2") to 191mm (7 1/2")

Note.

Wall thicknesses outside those specified cannot be accommodated. An overlap of at least 50mm at any duct joint must be allowed.

5 PACKAGING AND CASING REMOVAL

1. Unpack the boiler
2. Remove the casing as follows and place to one side to avoid damage.
   - **a.** Release the controls pod fixing screws (a) 3 full turns only.
     Remove the pod by pulling it forward to disengage from the keyhole slots.
   - **b.** Undo the 3 screws (b), retaining the casing to the back panel.
   - **c.** Remove the casing in the direction of the arrows.
3. Remove the boiler from its packaging base. The boiler may now be stood on its controls support protection frame to ease handling and installation
4. Unpack the boiler terminal box and, if applicable, the extension flue box(es).

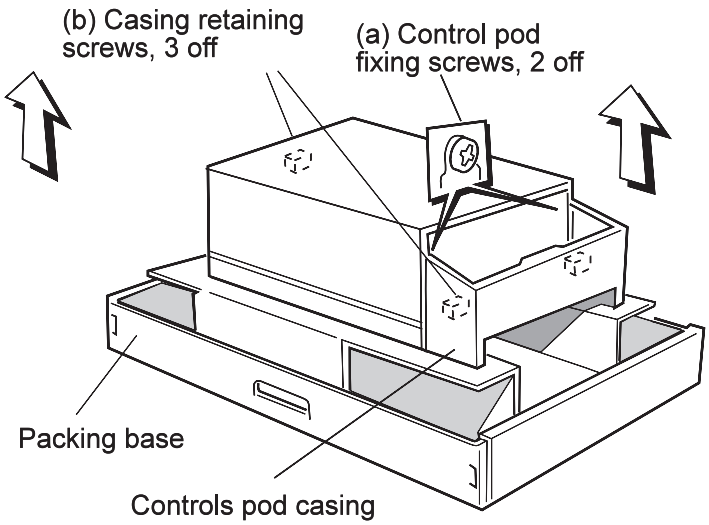

6 OPEN VENT SYSTEM REQUIREMENTS - Fully pumped

The system should be vented directly off the boiler flow pipe, as close to the boiler as possible. The cold feed entry should be inverted and MUST be positioned between the pump and the vent, and not more than 150mm (6") away from the vent connection.

There should be a minimum height - 450mm (18") - of open vent above the cistern water level. If this is impossible refer below.

The vertical distance between the highest point of the system and the feed/ expansion cistern water level MUST not be less than 450mm (18").

The pump MUST be fitted on the flow side of the boiler.

A suitable pump is a domestic circulator capable of providing an 11°C (20°F) temperature differential (e.g. Grundfos UPS 15/50 or equivalent). The vertical distance between the pump and feed/expansion cistern MUST comply with the pump manufacturer's minimum requirements to avoid cavitation. Should these conditions not apply, either lower the pump position or raise the cistern above the minimum requirement specified by **Caradon Ideal Limited.**

Note. *A cold water feed must be available back to the boiler when all automatic valves are in the closed position (refer to BS. 6798) and, when close coupled, the feed must not be in a vertical leg.*

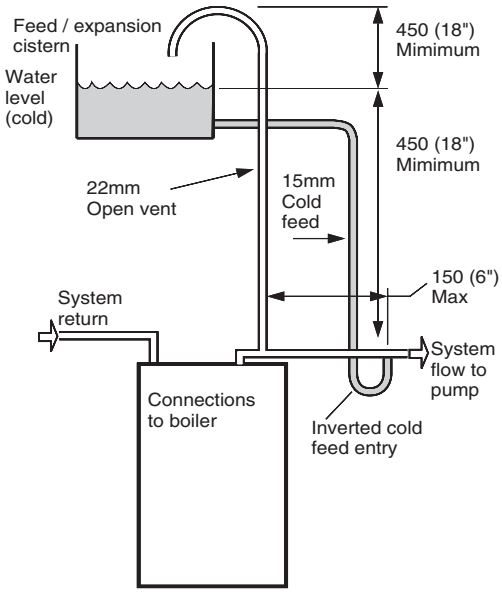

7 LOW HEAD INSTALLATIONS

The **Classic SE** range of boilers can be installed in low head situations by fitting a 'surge arrester' in the expansion pipe, as shown.

The following conditions MUST be observed:

1. The surge arrester must be at least 42mm in diameter x 150mm long, thus ensuring a MINIMUM air gap and a MINIMUM depth of water below the static water level (cold) of 75mm.
2. The static water level (cold) must be at least 200mm above the top of the horizontal flow pipe, fitted as shown. The vent connection MUST NOT be made immediately off the top of the boiler, as venting is made less efficient.
3. The maximum practical length of 15mm cold feed pipe should be used in order to reduce the effective volume of system water expanding into the feed/expansion cistern to a minimum.

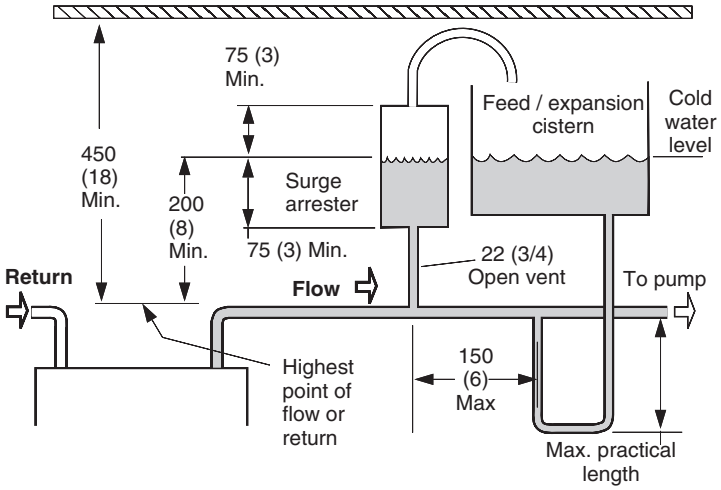

Minimum Requirements

Note. *The pump manufacturers minimum requirements must be complied with.*

All dimensions in mm (in.)
NB: Imperial dimensions are approximate

8 REQUIREMENTS FOR CORRECT GRAVITY HOT WATER PERFORMANCE

NOTE. *Gravity horizontal pipes should be ABOVE ceiling level and as SHORT as possible. A MINIMUM inclination of 25mm per 3m run (1" per 10') is required to avoid air locks. If these conditions cannot be met, pumped primaries MUST be used.*

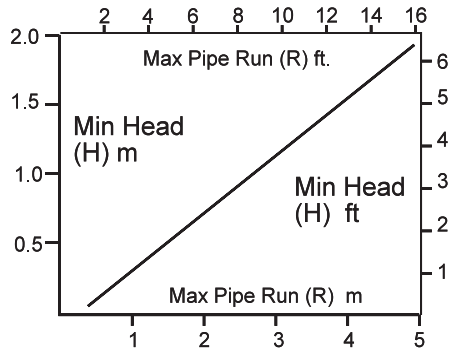

The above graph assumes 8 elbows in the gravity circuit. For each elbow in excess of 8, (R) must be reduced by 300 mm (12 in.) or (H) increased by 100 mm (4 in.)

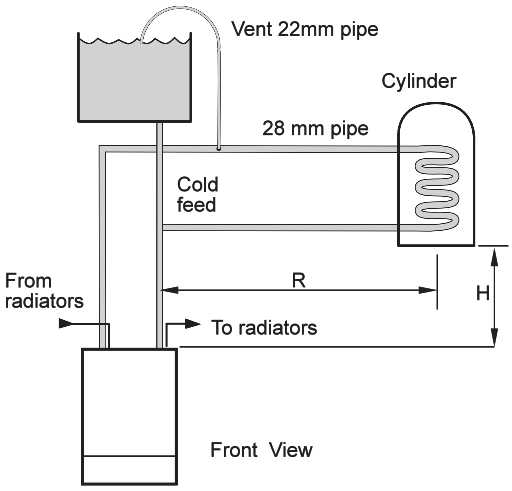

9 SEALED SYSTEM REQUIREMENTS

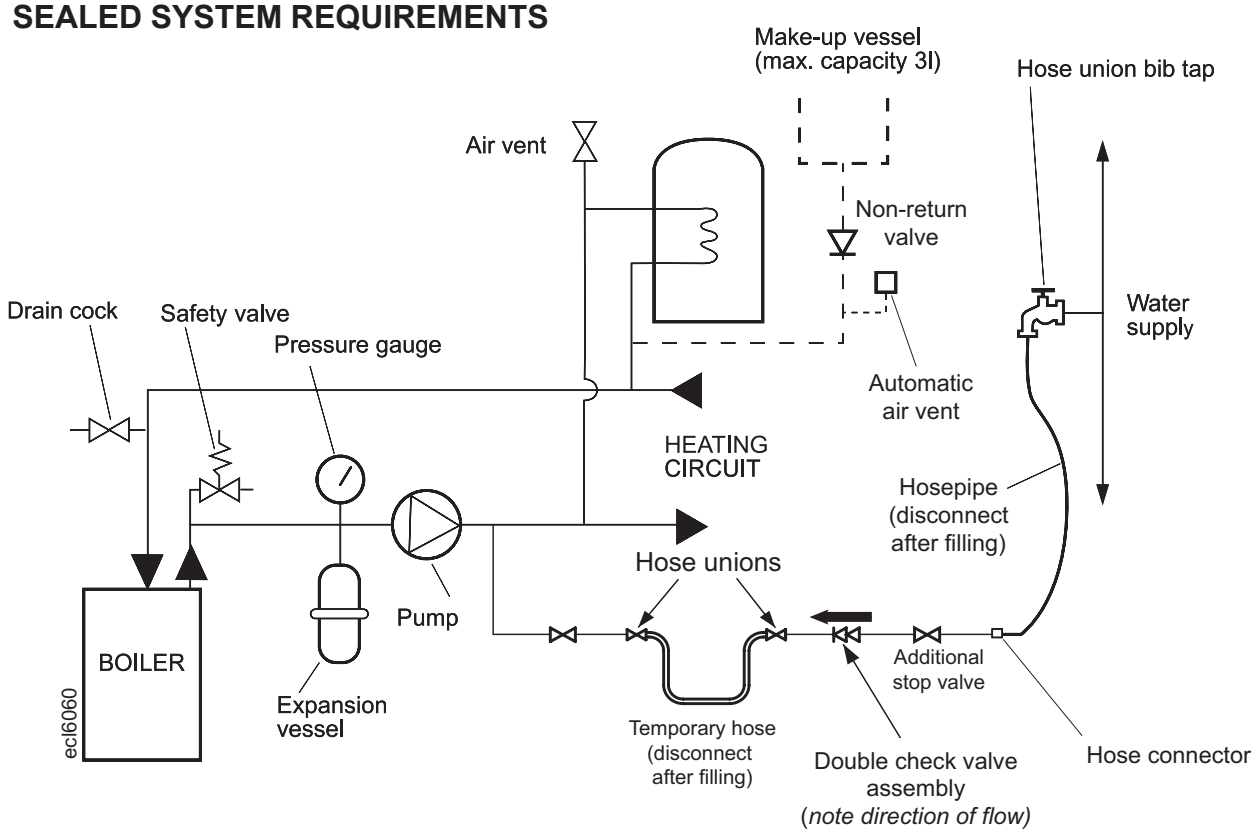

Note.

The method of filling, refilling, topping up or flushing sealed primary hot water circuits from the mains via a temporary hose connection is only allowed if acceptable to the local water authority.

1. General

a. The installation must comply with the requirements of BS.6798 and BS.5449.

b. The installation should be designed to work with flow temperatures of up to 82°C.

c. All components of the system, including the heat exchanger of the indirect cylinder, must be suitable for a working pressure of 3 bar (45 lb/in²) and temperature of 110°C. Care should be taken in making all connections so that the risk of leakage is minimised.

2. Safety Valve

A spring loaded safety valve complying with the relevant requirements of BS.6759 must be fitted in the flow pipe, as close to the boiler as possible and with no intervening valve or restriction. The valve should have the following features:

a. A non-adjustable preset lift pressure not exceeding 3 bar (45 lb./in²)

b. A manual testing device.

c. Provision for connection of a discharge pipe. *The valve or discharge pipe should be positioned so that the discharge of water or steam cannot create a hazard to the occupants of the premises or cause damage to electrical components and wiring.*

3. Pressure Gauge

A pressure gauge covering at least the range 0-4 bar (0-60 lb./in²) must be fitted to the system. The gauge should be easily seen from the filling point and should preferably be connected at the same point as the expansion vessel.

4. Expansion Vessel

a. A diaphragm type expansion vessel must be connected at a point close to the inlet side of the pump, the connecting pipe being not less than 15mm (1/2" nominal) size and not incorporating valves of any sort.

b. The vessel capacity must be adequate to accept the expansion of the system water when heated to 110°C (230°F)

c. The charge pressure must not be less than the static water head above the vessel The pressure attained in the system when heated to 110°C (230°F) should be at least 0.35 bar (5lb/in²) less than the lift pressure of the safety valve.

For guidance on vessel sizing refer to Table 6, Frame 10. For further details refer to BS.5449. For IE refer to the current edition of I.S. 813.

5. Cylinder

The cylinder must be either of the indirect coil type or a direct cylinder fitted with an immersion calorifier which is suitable for operating on a gauge pressure of 0.35 bar (5lb./in²) in excess of the safety valve setting. *Single feed indirect cylinders are not suitable for sealed systems.*

6. Make-up Water

Provision must be made for replacing water loss from the system, either:

a. From a manually fitted make-up vessel with a readily visible water level. The vessel should be mounted at least 150mm (6") above the highest point of the system and be connected through a non-return valve to the system, fitted at least 300mm (12") below the make-up vessel on the return side of the domestic hot water cylinder or radiators.

b. Where access to a make-up vessel would be difficult by pre-pressurisation of the system. Refer to 'Filling.'

10 SEALED SYSTEM REQUIREMENTS - continued

7. Mains Connection

There must be no direct connection to the mains water supply or to the water storage tank supplying domestic water, even through a non-return valve, without the approval of the local water authority.

8. Filling

The system may be filled by one of the following methods:

a. Through a cistern, used for no other purposes, via a ball valve permanently connected directly to a service pipe and / or a cold water distributing pipe.

The static head available from the cistern should be adequate to provide the desired initial system design pressure. The cold feed pipe from the cistern should include a non-return valve and a stop valve with an automatic air vent connected between them, the stop valve being located between the system and the automatic air vent. The stop valve may remain open during normal operation of the system if automatic water make-up is required.

b. Through a self-contained unit comprising a cistern, pressure booster pump (if required) and, if necessary, an automatic pressure reducing valve and flow restrictor. The cistern should be supplied through a temporary connection from a service pipe or cold water distributing pipe.

This unit may remain permanently connected to the heating system to provide limited automatic water make-up. Where the temporary connection is supplied from a service pipe or distributing pipe which also supplies other draw-off points at a lower level then a double check valve shall be installed upstream of the draw-off point.

c. Through a temporary hose connection from a draw-off tap supplied from a service pipe under mains pressure. Where the mains pressure is excessive a pressure-reducing valve shall be used to facilitate filling.

The following fittings shall form a permanent part of the system and shall be fitted in the order stated:

A stop valve complying with the requirements of BS. 1010, Part 2 (the hose from the draw-off tap shall be connected to this fitting).

A test cock.

A double check valve of an approved type.

- Thoroughly flush out the whole of the system with cold water, without the pump in position.
- With the pump fitted, fill and vent the system until the pressure gauge registers 1.5 bar (21.5lb/in^2).

  Examine for leaks.
- Check the operation of the safety valve by manually raising the water pressure until the valve lifts. This should occur within ± 0.3 bar (± 4.3lb/in^2) of the pre-set lift pressure.
- Release water from the system until the initial system design pressure is reached.
- Light the boiler and heat the system to the maximum working temperature. Examine for leaks.
- Turn off the boiler and drain the system while still hot.
- Refill and vent the system.

Sizing procedure for expansion vessels: The volume of the expansion vessel (litres) fitted to a sealed system shall not be less than that given by Table 6, multiplied by a factor of 0.8 (for flow temperatures of less than 88 °C).

Table 6

Safety valve setting	**3.0 bar**			**2.5 bar**			**2.0 bar**	
Vessel charge and initial system pressure	0.5 bar	1.0 bar	1.5 bar	0.5 bar	1.0 bar	1.5 bar	0.5 bar	1.0 bar
Total water content of system (litres)	**Expansion vessel volume (litres)**							
25	2.1	2.7	3.9	2.3	3.3	5.9	2.8	5.0
50	4.2	5.4	7.8	4.7	6.7	11.8	5.6	10.0
75	6.3	8.2	11.7	7.0	10.0	17.7	8.4	15.0
100	8.3	10.9	15.6	9.4	13.4	23.7	11.3	20.0
125	10.4	13.6	19.5	11.7	16.7	29.6	14.1	25.0
150	12.5	16.3	23.4	14.1	20.1	35.5	16.9	30.0
175	14.6	19.1	27.3	16.4	23.4	41.4	19.7	35.0
200	16.7	21.8	31.2	18.8	26.8	47.4	22.6	40.0
225	18.7	24.5	35.1	21.1	30.1	53.3	25.4	45.0
250	20.8	27.2	39.0	23.5	33.5	59.2	28.2	50.0
275	22.9	30.0	42.9	25.8	36.8	65.1	31.0	55.0
300	25.0	32.7	46.8	28.2	40.2	71.1	33.9	60.0
Multiplying factors for other system volumes	0.0833	0.109	0.156	0.094	0.134	0.237	0.113	0.20

11 WALL MOUNTING TEMPLATE

1. Tape the template to the wall in the selected position. Ensure squareness by use of a plumbline, as shown.
2. Mark out the position of the 3 wallplate screws, choosing one from each group of 3 holes. Also mark the position of the hole for the duct, the jacking screw and the top cover plate screws.
3. Drill the 3 holes, 8 mm (5/16"), and insert the 3 plastic plugs. Drill the jacking screw and the top cover plate screw holes 7mm (9/32") and insert the plastic plugs.
4. Remove the template from the wall.

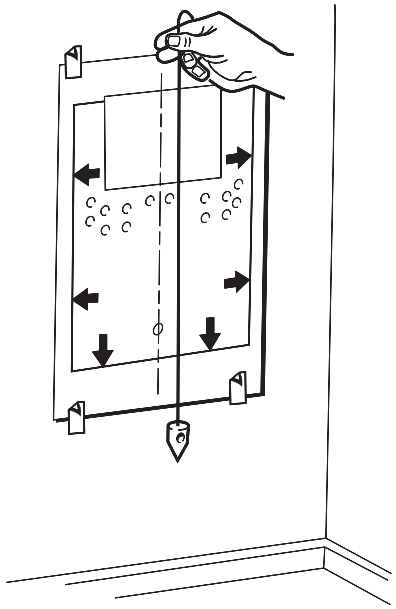

12 PREPARING THE WALL

IMPORTANT.
The wall must be of suitable load bearing capacity.

1. Cut the appropriate hole in the wall for insertion of the terminal assembly.

   Note. *The terminal must not come into contact with a combustible material such as that used in the non-standard construction of timber framework and plasterboard etc.*

2. Fix the mounting plate to the wall with the 3 No.14 x 50 mm screws provided.

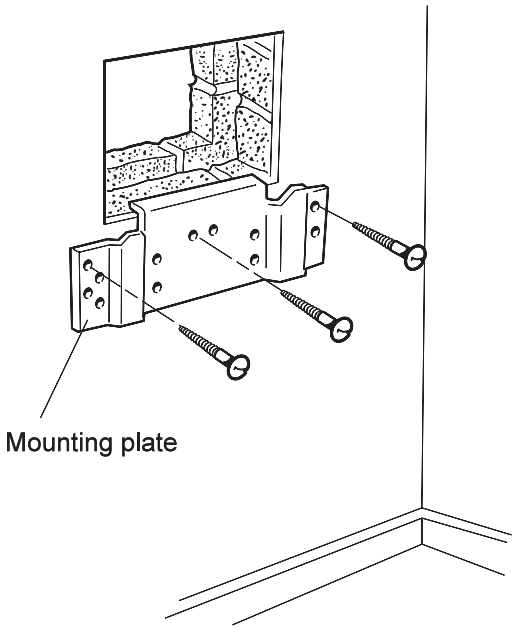

13 CHECKING THE BOILER

Check the jacking screw is fitted and screwed home.

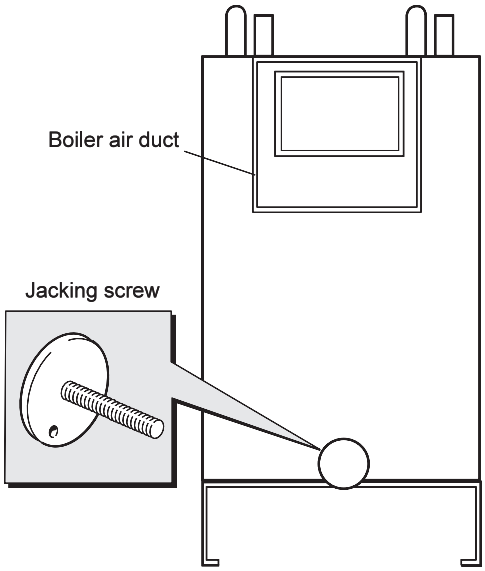

Rear View of Boiler

14 MOUNTING THE BOILER

1. Lift the boiler onto the wall mounting plate, entering the projecting flue duct into the opening cut in the wall, and lowering the 2 slots in the boiler back panel onto the angled tabs on the top of the wall mounting plate.

   DO NOT USE THE BURNER ASSEMBLY FOR LIFTING.

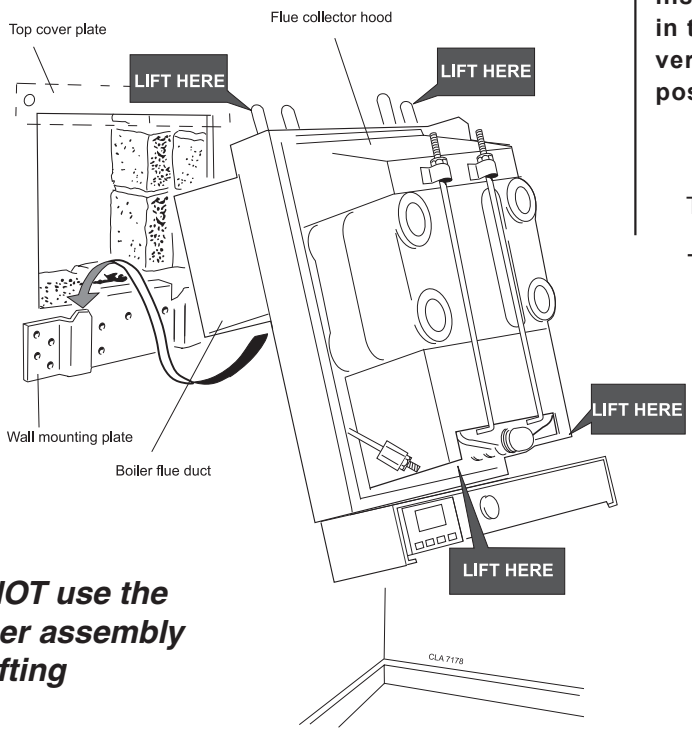

Do NOT use the burner assembly for lifting

Flue Alignment

It is most important that the boiler is installed in the vertical position

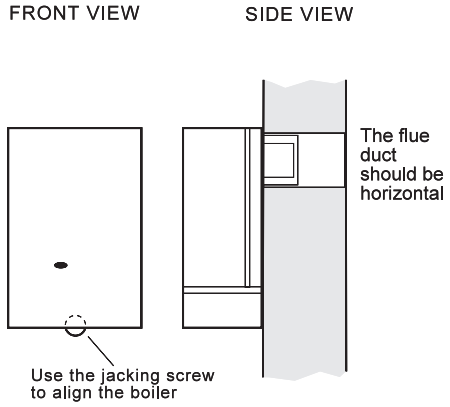

The wall must be of suitable load-bearing capacity

2. Adjust the flue to its horizontal position by tilting the boiler forward at the bottom then turning the jacking screw. Release and check alignment with a spirit level. Secure the jacking screw with a No.10 x 50 mm wood screw.

3. Fit the top cover plate in position above the boiler air duct with the 2 No.10 x 50 mm screws provided.

15 FITTING THE FLUE ASSEMBLY

FLUE TERMINAL ASSEMBLY

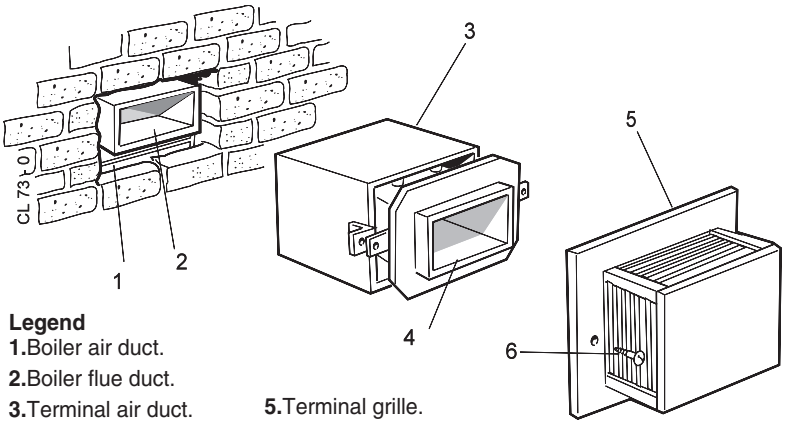

Legend

1. Boiler air duct.
2. Boiler flue duct.
3. Terminal air duct.
4. Terminal flue duct.
5. Terminal grille.
6. Terminal grille securing screws

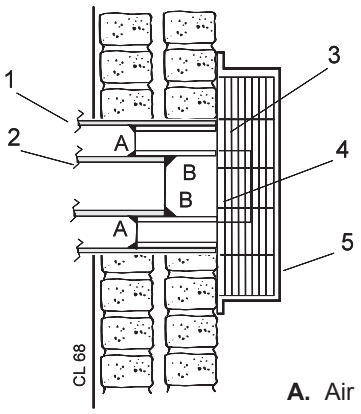

A. Air duct joint
B. Flue duct joint

FLUE TERMINAL SHOWN IN POSITION

1. Remove the 2 securing screws (*6*) and separate the terminal grille (*5*), terminal flue duct (*4)* and terminal air duct (*3*).
2. Smear sealant around outer the perimeter of the terminal air duct at the opposite end to the brackets and on the mating face of the boiler air duct (use one sachet of sealant).
3. Push the terminal air duct fully in until the fixing brackets contact the wall face.
4. Make good between the wall and duct, from OUTSIDE of the building.
5. From OUTSIDE of the building, pass the terminal flue duct through the wall opening and slide it over the boiler flue duct. Locate it as shown.
6. Seal the flue duct joint (B) with the remaining sachet of sealant provided.
7. Fasten the terminal grille to the flue and air ducts, using the 2 securing screws (*6*) provided.

16 GAS CONNECTION

A MINIMUM gas pressure of 20 mbar (8 in.w.g.) MUST be available at the boiler inlet, with the boiler operating.

The main gas cock is on the left hand side of the gas control valve, as shown.

To facilitate connection the gas cock may removed from the gas control valve.

17 WATER CONNECTIONS

1. Remove the plastic plugs from the flow and return pipes.
2. Make all water connections and check for water soundness.

18 ELECTRICAL CONNECTIONS

WARNING. The appliance must be efficiently earthed.

A mains supply of 230 V ~ 50 Hz is required.

All external controls and wiring must be suitable for mains voltage. Wiring should be in 3-core PVC insulated & sheathed cable, not less than 0.75mm^2 (24 x 0.2mm) to BS. 6500 Table 16 Wiring Regulations and local regulations. For IE reference should be made to the current ETCI rules for electrical installations.

Connection must be made in a way that allows complete isolation of the electrical supply - such as a double pole switch, having a 3mm (1/8") contact separation in both poles or a plug and socket, serving only the boiler and system controls. The means of isolation must be accessible to the user after installation.

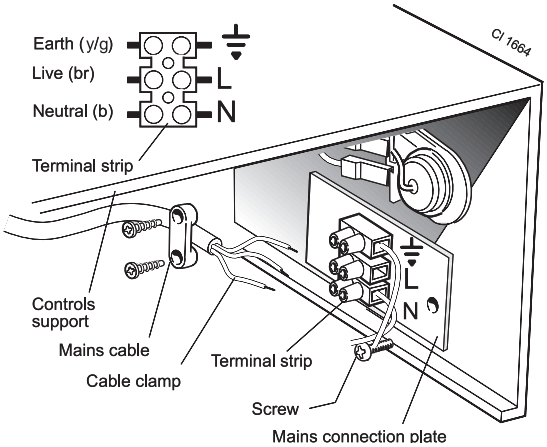

LEGEND		br	brown	pk	pink		
b	blue	gy	grey	r	red	w	white
bk	black	or	orange	v	violet	y/g	yellow/green

Note. *If an optional programmer is to be fitted refer to the instructions provided with the kit and Frame 19.*

Flow wiring diagram

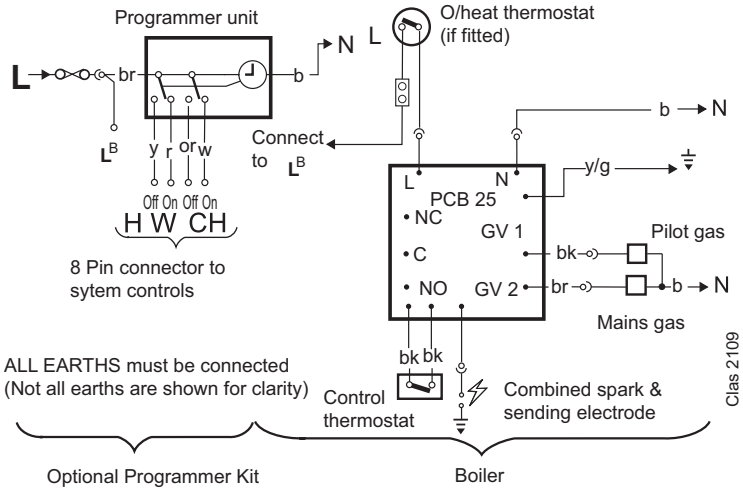

1. Remove the control box securing screws (M4 pozi). Pull the box forward to disengage. Refer to Frame 39.
2. Route the mains cable through the grommet in the plate of the control box.
3. Remove the screw and release the mains connection plate. Unscrew the cable clamp screws and remove the clamp.
4. Connect the mains cable wires to the terminal strip.
5. Replace the control box and fasten to the controls support.

For details of PCB wiring refer to Frame 20

19 EXTERNAL CONTROLS

External wiring must be in accordance with the current I.E.E. (BS 7671) Wiring Regulations. For Ireland reference should be made to the current ETCI rules for electrical installations.

The wiring diagrams illustrated in Frames 21-24 cover the systems most likely to be fitted to this appliance.

For wiring external controls to the **Classic SE RS** boiler, reference should be made to the system wiring diagrams supplied by the relevant manufacturer, in conjunction with the wiring diagrams shown in Frames 21-24.

Difficulty in wiring should not arise, providing the following directions are observed:

1. Controls that switch the system ON and OFF, e.g. a time switch, MUST be wired, in series, in the live mains lead to the boiler.
2. Controls that override an ON/OFF control, e.g. a frost thermostat, MUST be wired into the mains lead, in parallel, with the control(s) to be overridden. Refer to Frame 24.
3. Controls that switch the circulation pump only ON and OFF, e.g. a room thermostat, MUST be wired in series with the pump in the live pump lead.
4. If a proprietary system is used, follow the instructions supplied by the manufacturer.
5. SYSTEM DESIGNS FEATURING CONTROLS OR WIRING ARRANGEMENTS WHICH ALLOW THE BOILER TO FIRE WHEN THERE IS NO PUMPED OR GRAVITY CIRCULATION TAKING PLACE SHOULD NOT BE FITTED.

Advice on required modifications to the wiring may be obtained from the component manufacturers.

Notes

1. *Connections between a frost thermostat and the time control should be made without disturbing other wiring.*
2. *A frost thermostat should be sited in a cool place in the house, but where it can sense heat from the system.*

20 PICTORIAL WIRING

LEGEND

b blue
bk black
br brown
r red
y yellow
w white
or orange
v violet
p pink
gy grey
y/g yellow/green

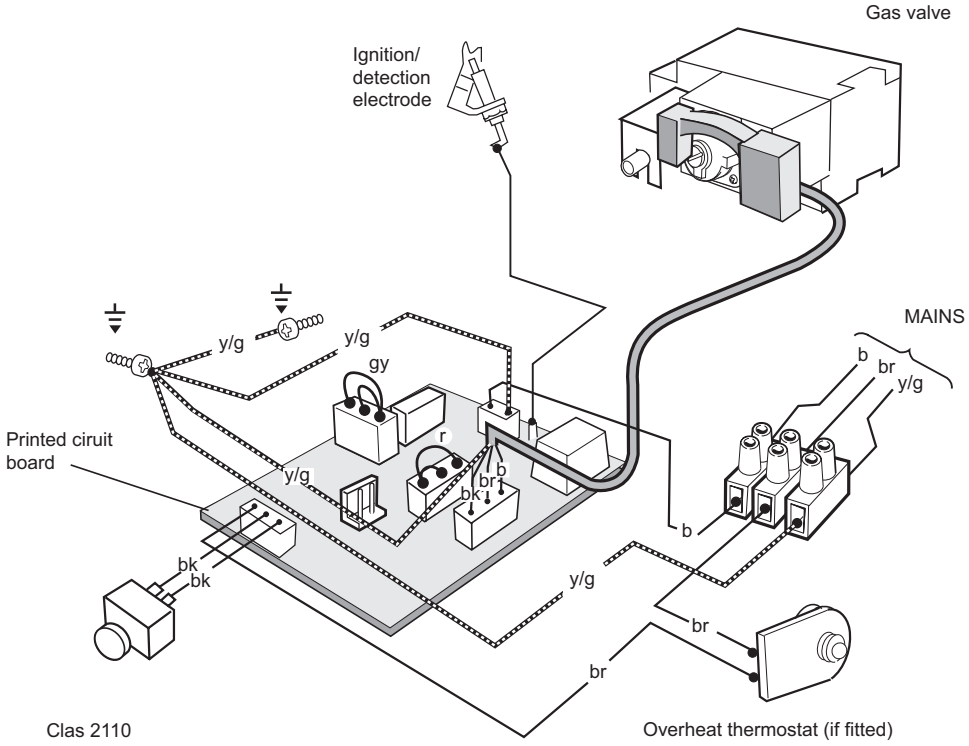

21 MID POSITION VALVE

Pumped only

Notes.

1. *Some earth wires are omitted for clarity. Ensure proper earth continuity when wiring.*
2. *Numbering of terminals on thermostats is specific to the manufacturer.*
3. *This is a fully controlled system - set the boiler thermostat to maximum.*
4. *Switchmaster 'Midi' is similar in operation but the wiring differs slightly; see manufacturer's literature.*

	Room Thermostat Terminals			Mid Position valve details	Cylinder Thermostat Terminals		
TLX 2259 or2284	1	3	2	HONEYWELL Y PLAN V4073H 1039	1	2	c
	3	1	4	PEGLER 'Unishare' DT 1701 etc.	1	2	3
	1	2	4	LANDIS & GYR 'LGM' SK3 - LT2701	2	3	1
RTE RTM/RTC	1	3	-	A. C. L. 679. H. 340.30.UO	1 bk	2 y	3 r
	1 3	2 1	4 N	DRAYTON Flowshare 2	2	3	1
	1	3	4	SOPAC Centra Share ZV20 - EB MID	1	2	c
	2	1	4	DANFOSS DMV - 3M	n. c.	n. o.	com.
				SWITCHMASTER			

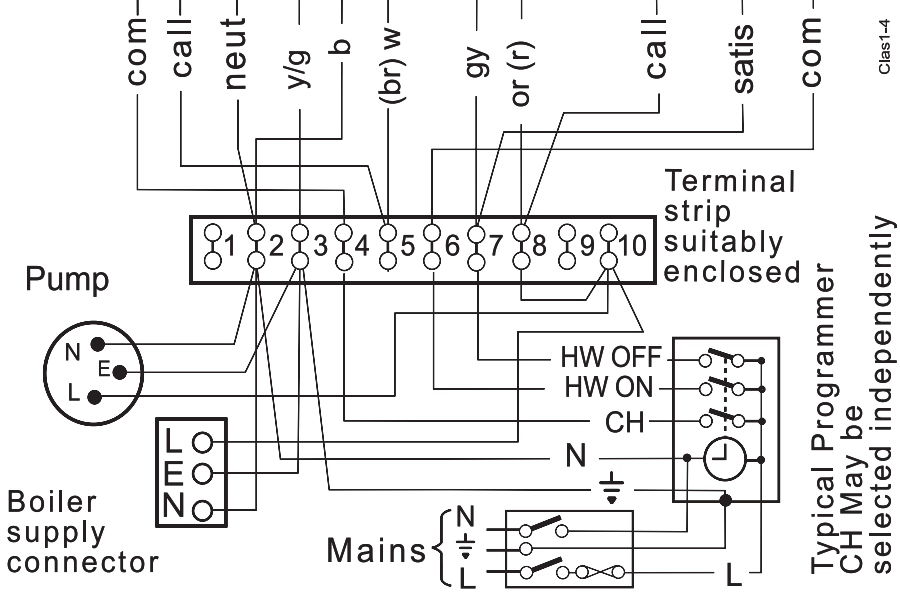

LEGEND

b blue
bk black
br brown
r red
or orange
w white
gy grey
y/g yellow/green

22 TWO SPRING CLOSED VALVES

Pumped only

Notes.

1. *Some earth wires are omitted for clarity. Ensure proper earth continuity when wiring.*
2. *Numbering of terminals on thermostats is specific to the manufacturer.*
3. *This is a fully controlled system - set the boiler thermostat to maximum.*
4. *Switchmaster valve has grey and orange auxiliary switch leads but the grey wire must be connected to the live supply.*

LEGEND

b blue
bk black
br brown
r red
w white
or orange
y/g yellow/green
gy grey

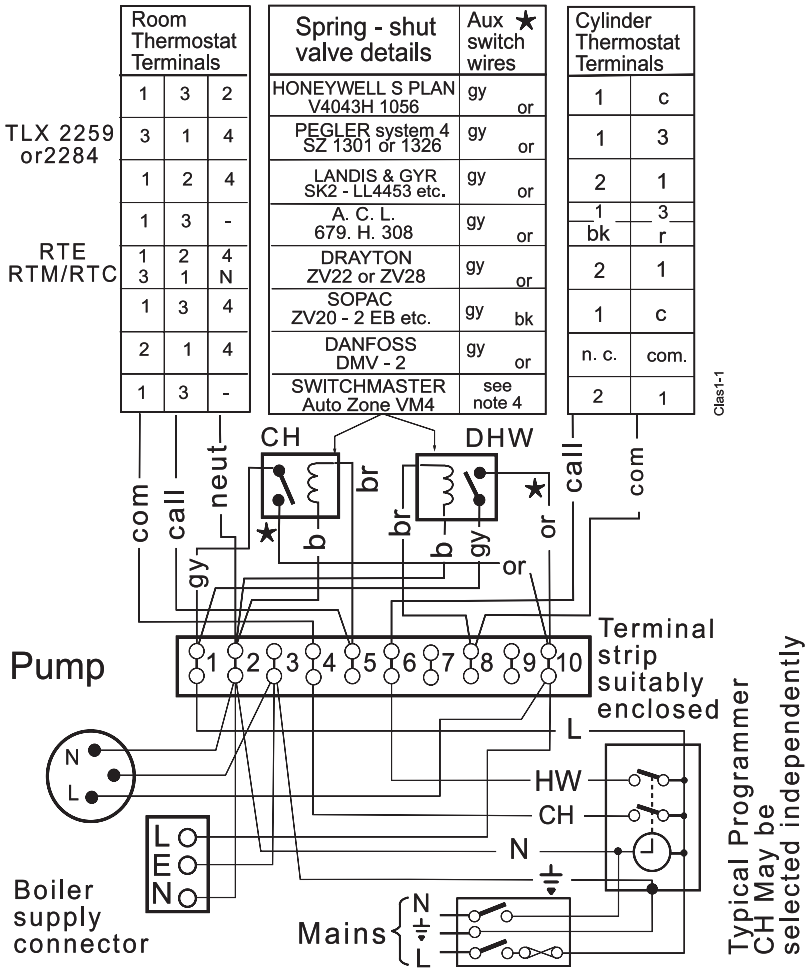

23 HONEYWELL 'C' PLAN

Gravity HW and Pumped CH

Notes.

1. *Some earth wires are omitted for clarity. Ensure proper earth continuity when wiring*
2. *Numbering of terminals on thermostats is specific to the manufacturer.*

LEGEND

w white
r red
bk black
br brown
or orange
b blue
gy grey
y/g yellow/green

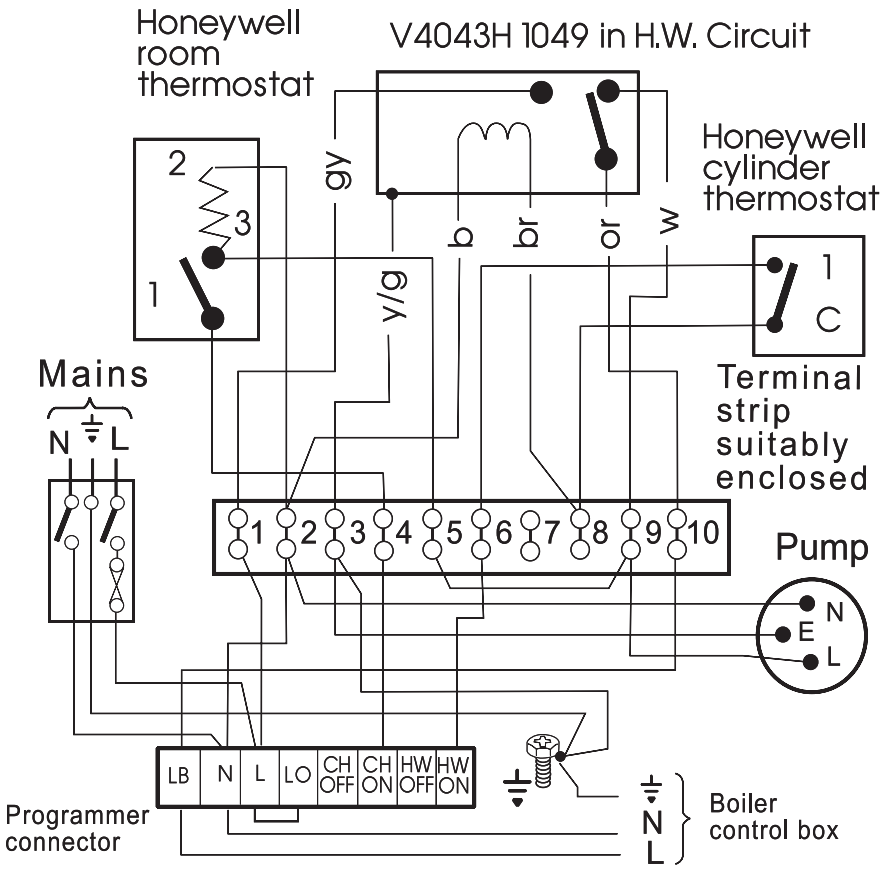

24 FROST PROTECTION

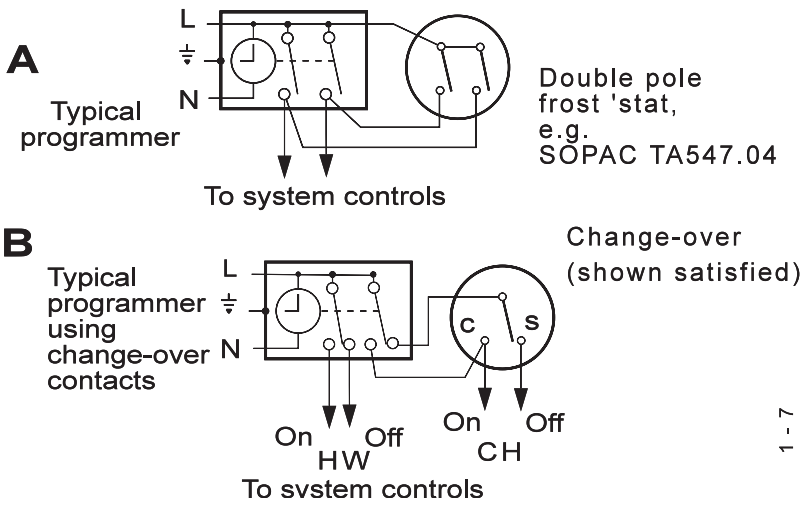

Central heating systems fitted wholly inside the house do not normally require frost protection as the house acts as a 'storage heater' and can normally be left at least 24 hrs. without frost damage. However, if parts of the pipework run outside the house or if the boiler will be left off for more than a day or so, then a frost 'stat should be wired into the system.

This is usually done at the programmer, in which case the programme selector switches are set to 'Off' and all other controls MUST be left in the running position. The frost 'stat should be sited in a cold place but where it can sense heat from the system. Wiring should be as shown, with minimal disturbance to other wiring of the programmer.

Designation of the terminals will vary, but the programmer and thermostat manufacturer's leaflets will give full details.

Diagram A shows a double pole frost 'stat, which should suffice for all systems which do not use the 'OFF' terminals of the programmer.

Diagram B shows a 'change-over' frost 'stat, which will cover most systems which do use 'CH OFF.' If, however, on such a system the HW pipework is in an isolated part of the house, a second frost 'stat may be used to protect it. If in doubt, ask your installer for advice.

25 COMMISSIONING AND TESTING

The Benchmark Log Book or equivalent self certification should be completed and signed to demonstrate compliance with Building Regulations.

A. ELECTRICAL INSTALLATION

1. Checks to ensure electrical safety should be carried out by a competent person.
2. ALWAYS carry out preliminary electrical system checks, i.e. earth continuity, polarity, resistance to earth and short circuit ,using a suitable test meter.

B. GAS INSTALLATION

1. The whole of the gas installation, including the meter, MUST be inspected and tested for soundness, and purged in accordance with the recommendations of BS. 6891. In IE refer to I.S.813:2002.
2. Purging air from the gas installation may be expedited by loosening the union on the gas service cock on the boiler and purging until gas is detected.
3. Retighten the union and check for gas soundness.

WARNING. Whilst effecting the required gas soundness test and purging air from the gas installation, open all windows and doors, extinguish naked lights and **DO NOT SMOKE.**

26 INITIAL LIGHTING

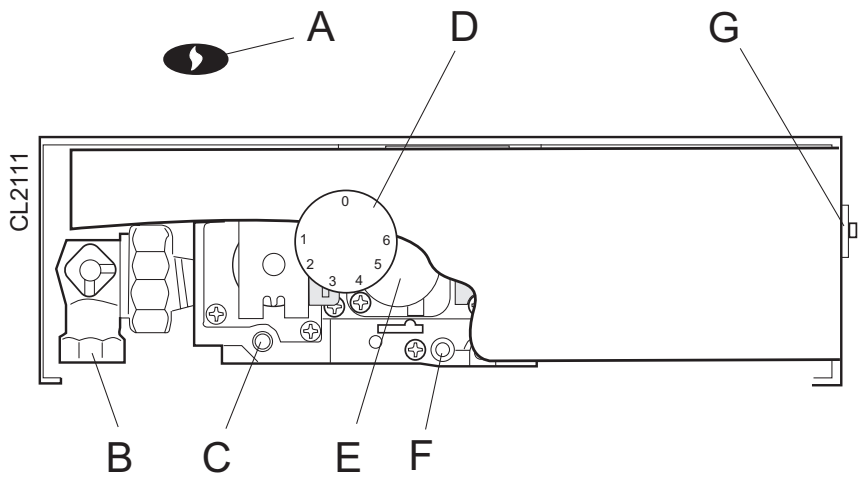

LEGEND

A Sightglass
B Gas service cock
C Inlet pressure test point
D Thermostat knob
E Main burner pressure adjuster
F Burner pressure test point
G Overheat stat reset button

1. Check that all drain cocks are CLOSED and any valves in the flow and return lines are OPEN.

2. Check that the gas service cock (B) is OPEN and that the boiler thermostat knob (D) is OFF.

Fit the boiler casing but do not fit the controls casing pod (Frame 26).

3. Fitting the Boiler Casing

The boiler casing must be refitted with the controls support casing attached for alignment purposes. Check that the sealing strip is in place along the 4 rear edges of the boiler casing, locate over the upper support bracket and secure with the 3 captive screws.

The casing must seat correctly and compress the sealing strip to make an airtight joint.
Visually check the side seals but, if side clearances are limited, then check that the top and bottom edges of the casing are correctly located.

If the Sealed System Unit is fitted remove the unit casing in order to inspect the top casing seal.

To gain access to the gas valve:

a. Remove the controls support casing. Release the controls support front fixing screws 3 turns only. Remove the pod by pulling it forward to disengage from the keyhole slots.

b. Remove the control box securing screws and swing it down into the servicing position

4. Slacken the screw in the burner pressure test point (F) and connect a gas pressure gauge via a flexible tube.

5. Swing the control box back into its working position.

6. Switch the electricity supply ON and check that all external controls are calling for heat.

7. Press the overheat thermostat reset button (G), if fitted.

8. Set the boiler thermostat knob (D) to maximum. The pilot gas valve should open and pilot ignition commence. When the pilot is alight the main burner will cross-light smoothly.

If the boiler does not light, refer to the Fault Finding section.

9. Test for gas soundness around ALL boiler gas components, using leak detection fluid.

10. Operate the boiler for 10 minutes to stabilise the burner temperature.

11. The boiler is preset at the factory but if any adjustment is necessary proceed as follows:

a. Set the boiler control knob to OFF.

b. Switch the electricity supply OFF.

c. Swing the control box down into the servicing position.

d. Remove the main burner adjuster cover.

e. Turn the adjusting screw *clockwise* to INCREASE the pressure, or *anticlockwise* to DECREASE the pressure.

f. Swing the control box back into its working position.

g. Switch the electricity supply ON, the control knob ON and check the new setting pressure.

12. If necessary repeat steps 11a to g until the required burner pressure is achieved. Record this value in the Benchmark log book.

13. Set the boiler control knob to OFF.

14. Switch the electricity supply OFF.

15. Swing the control box down into the servicing position.

16. Refit the main burner pressure adjuster cover.

17. Remove the pressure gauge and tube. Retighten the sealing screw in the pressure test point. Ensure a gas tight seal is made.

18. Swing the control box back into its working position and secure.

27 GENERAL CHECKS

Make the following checks for correct operation:

1. Set the boiler thermostat knob to position 6 and operate the mains on/off switch. Check that the main burner lights and extinguishes in response.
2. The correct operation of ANY programmer and all other system controls should be proved.

   Operate each control separately and check that the main burner or circulating pump, as the case may be, responds.
3. Check that the casing is sealed correctly and compressing the sealing strip all around the casing.
4. **Water Circulating System**

   a. With the system HOT, examine all water connections for soundness.

   b. With the system still hot, turn off the gas, water and electricity supplies to the boiler and drain down, in order to complete the flushing process.

   c. Refill and vent the system, clear all air locks and again check for water soundness.

   d. Balance the system.
5. Finally, set the controls to the user's requirements.

The temperatures quoted below are approximate and vary between installations.

Knob Setting	Flow Temperature °C	°F
1	54	130
2	60	140
3	66	150
4	71	160
5	77	170
6	82	180

WARNING. The boiler MUST NOT be operated with the casing removed.

28 HANDING OVER

After completing the installation and commissioning of the system the installer should hand over to the householder by the following actions:

1. Hand the User's Instructions to the householder and explain his or her responsibilities under current Gas Safety (Installation and Use) Regulations or rules in force.
2. Draw attention to the lighting instruction label affixed to the controls pod door.
3. Explain and demonstrate the lighting and shutting down procedures.
4. The operation of the boiler and the use and adjustment of ALL system controls should be fully explained to the Householder, to ensure the greatest possible fuel economy consistent with household requirements of both heating and hot water consumption.

   Advise the User of the precautions necessary to prevent damage to the system and to the building, in the event of the system remaining inoperative during frosty conditions.
5. Explain the function and the use of the boiler thermostat and external controls.
6. Explain the function of the boiler overheat thermostat (if fitted) and emphasise that if cutout persists, the boiler should be turned off and a CORGI registered installer consulted. In IE contact a Competent Person.
7. Explain and demonstrate the function of time and temperature controls, radiator valves etc., for the economic use of the system.
8. If any programmer is fitted, draw attention to the Programmer User's Instructions and hand them to the Householder.
9. **After installation, commissioning and customer handover, please complete the benchmark appliance log book and leave this with the customer. For IE, it is necessary to complete a "Declaration of Conformity" to indicate compliance to I.S. 813:2002.**
10. Stress the importance of regular servicing by a CORGI registered installer and that a comprehensive service should be carried out AT LEAST ONCE A YEAR. In IE servicing work must be carried out by a Competent Person.

29 SCHEDULE

To ensure the continued safe and efficient operation of the appliance it is recommended that it is checked at regular intervals and serviced as necessary. The frequency of servicing will depend upon the installation condition and usage but should be carried out at least annually .

It is the law that any service work must be carried out by a CORGI registered installer. In IE service work must be carried out by a Competent Person.

a. Light the boiler and carry out a pre-service check, noting any operational faults.

b. Clean the main burner.

c. Clean the heat exchanger.

d. Clean the main and pilot injectors.

e. Remove any debris from inside the base of the casing.

f. Check that the flue terminal is unobstructed and that the flue system is sealed correctly.

g. If the appliance has been installed in a compartment, check that the ventilation areas are clear.

The servicing procedures are covered more fully in Frames 30 to 35 and MUST be carried out in sequence.

WARNING. Disconnect the electrical supply.

IMPORTANT. After completing the servicing or exchange of components always test for gas soundness and carry out functional checks as appropriate.

When work is complete the casing MUST be correctly refitted, ensuring that a good seal is made.

The boiler must NOT be operated if the casing is not fitted.

Note. *In order to carry out either servicing or replacement of components, the boiler casing must be removed (Frame 30).*

30 BOILER CASING REMOVAL

1. If the **Classic Sealed System Unit** is fitted lift off the casing to expose the boiler casing top fixing screw.
2. Open the controls pod door and release the 3 captive screws at the top and bottom of the casing. Lift the casing off the boiler and retain in a safe place.
3. Release the 3 captive screws at the top and bottom of the casing. Lift the casing off the boiler and retain in a safe place .
4. Isolate the gas supply at the service cock.

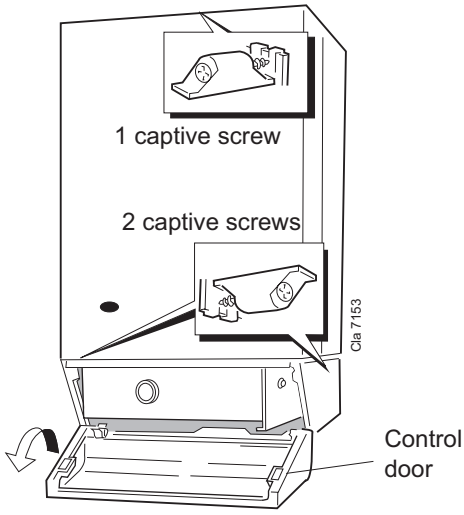

31 BURNER AND AIR BOX REMOVAL

1. Remove the screw retaining the burner support bracket to the combustion chamber.
2. Remove the M5 pozi screw situated at the LH bottom rear of the burner and pull the burner downward in order to disengage the retention tab. Remove burner to a safe place for inspection and cleaning.
3. Remove the 4 screws retaining the air box / pilot assembly to the vertical manifold.
4. Remove the control box fixing screws and pull the box forward and downward to disengage.
5. Pull off the electrode lead at the PCB.
6. Open the clips retaining the HT lead. Remove the air box assembly to a safe place for inspection and cleaning.

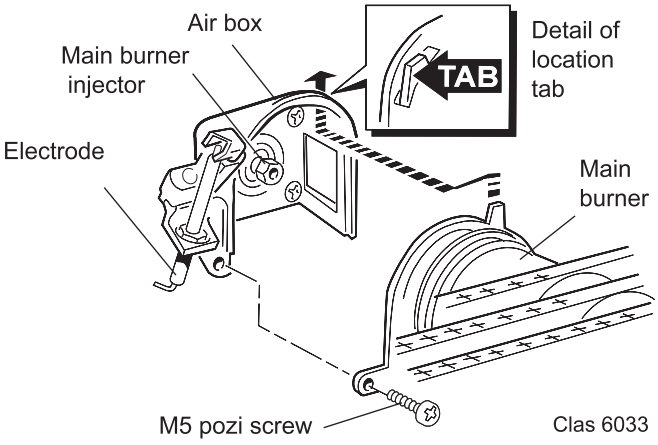

32 CLEANING THE FLUEWAYS

1. Remove the collector hood by undoing the front tie rod nuts and releasing the tie rods from the combustion chamber. Withdraw the rods.
2. Remove the 4 collector hood retaining screws and washers.

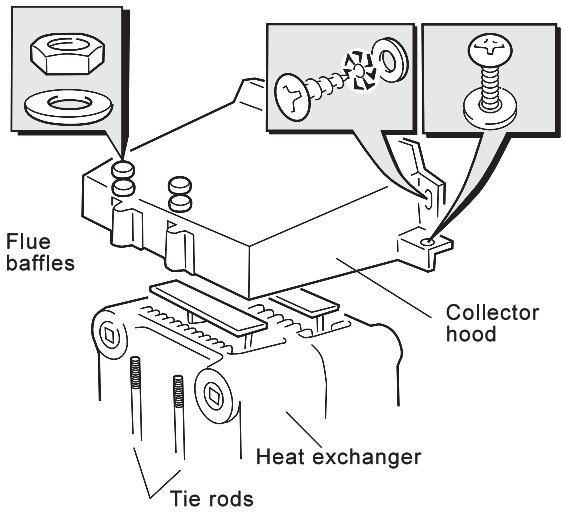

3. Uncouple and remove the flue baffles from the heat exchanger.
4. Remove all loose deposits from the heat exchanger, particularly between the fins, using a suitable brush.

33 CLEANING THE BURNER AND PILOT ASSEMBLY

1. Brush off any deposits that may have fallen on to the burner head (ensuring the flame ports are unobstructed) and remove any debris that may have collected.
   Note. *Brushes with metallic bristles must not be used.*
2. Remove the main burner injector and ensure there is no blockage or damage. Clean or renew as necessary.
3. Refit the injector, using an approved jointing compound sparingly.
4. Inspect the pilot burner and ignition / detection electrode. Ensure that they are clean and in good condition.

Check that:

a. The pilot burner injector is not blocked or damaged. Refer to Frame 40 for removal details.

b. The pilot burner is clean and unobstructed.

c. The ignition / detection electrode is clean and undamaged.

d. The ignition / detection lead is in good condition.

e. The spark gap is correct . Refer to Frame 40. Clean or renew as necessary.

Note. *The pilot shield is located around the pilot assembly bracket and is located by the electrode retaining nut.*

34 REASSEMBLY

Reassemble in reverse order to that shown in Frames 30 to 33.

1. Refit the flue baffles and retain with the spring clips.
2. Refit the collector hood, replacing any damaged or deteriorating gaskets.

   Note. *Ensure that the rear **vertical** hood retaining screws are tightened BEFORE the rear **horizontal** screws and that the tie rods are located into the holes in the base of the combustion chamber.*
3. Refit the burner and air box assembly. Ensure the burner tab is correctly located. Refer to Frame 43.
4. Refit the burner support.
5. Refit the control box assembly.
6. Turn on the gas supply.
7. Ensure the sightglass in the boiler casing is clean and undamaged .
8. Refit the boiler casing and tighten the 3 captive screws. Close the pod door.
9. Inspect the visible casing seal for correct fit.
10. Close the controls door.

35 GAS PRESSURE ADJUSTMENT

PILOT

The pilot is factory set to maximum and no further adjustment is possible. If, after removing and checking the injector (as detailed in Frame 43) and ensuring that there is an inlet pressure of 20 mbar available, the pilot does not light then contact **Caradon Ideal Limited.**

Relight in accordance with 'Initial Lighting', Frame 26.

MAIN BURNER

After any servicing, reference should be made to Table 2, which quotes details of the rated output with the related burner setting pressure and the heat input. Any required adjustments should be made by using the pressure adjustment screw.

Refer to Initial Lighting, Frame 26.

REPLACEMENT OF PARTS

36 GENERAL

When replacing any component:

1. Isolate the electricity supply.
2. Turn off the gas supply at the boiler.
3. Remove the boiler casing . Refer to Frame 30.

IMPORTANT. When work is complete the casing MUST be correctly refitted - ensuring that a good seal is made.

Note. *In order to assist fault finding, the control box printed circuit board is fitted with 2 indicator lights which represent the following boiler conditions:*

Neon I3. Mains electricity ON.

Neon SG1. Flashes to indicate ignition operation (stops after detection).

The boiler MUST NOT be operated if the casing is not fitted.

37 SIGHTGLASS REPLACEMENT

1. Refer to Frame 36.
2. Unfasten the 2 nuts and washers holding the sightglass assembly to the casing front panel.
3. When fixing the new assembly, ensure that the parts are in the correct order. The frame MUST have the return edge at the bottom.
4. Retighten the 2 nuts to ensure an airtight seal. Do NOT overtighten.
5. Replace the boiler casing. Refer to Frame 26.

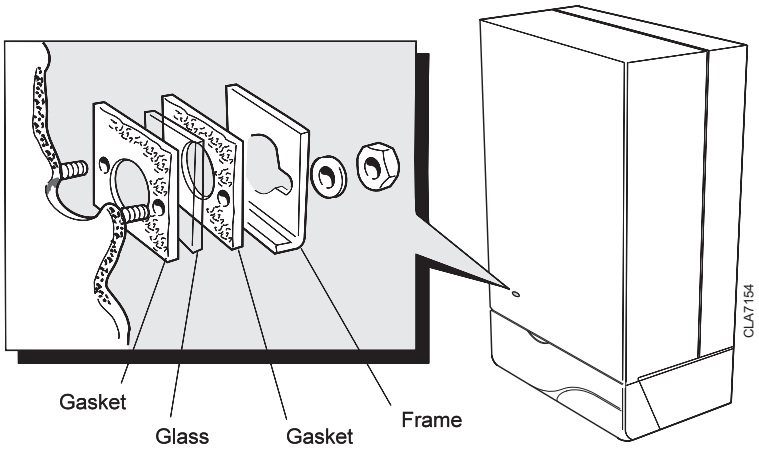

38 OVERHEAT THERMOSTAT REPLACEMENT (if fitted)

1. Refer to Frames 36 & 52.
2. Remove the control box securing screws.
3. Pull the box forward and downward to disengage
4. To remove the overheat thermostat, pull off the electrical connections at the thermostat. Remove the backnut retaining the thermostat to the bracket. Remove the thermostat from the heat exchanger pocket.
5. Fit the new thermostat and reassemble in reverse order.
6. Check the operation of the boiler.

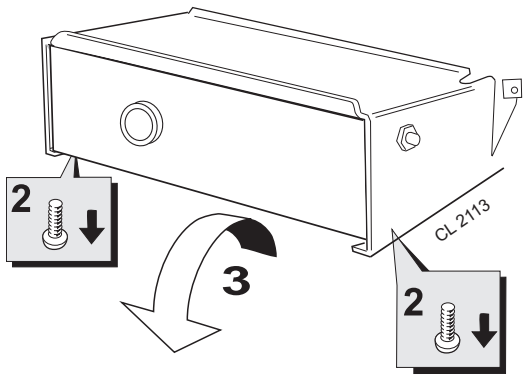

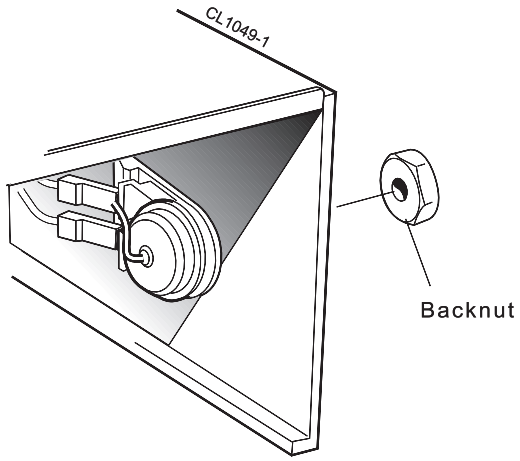

39 CONTROL THERMOSTAT REPLACEMENT

1. Refer to Frame 36.
2. Pull the knob off the shaft.
3. Remove the control box fixing screws. Pull the box forward and downward to disengage.
4. Remove the screws securing the thermostat control to the control box.
5. Remove the phial from the pocket.
6. Replace and reassemble in reverse order.

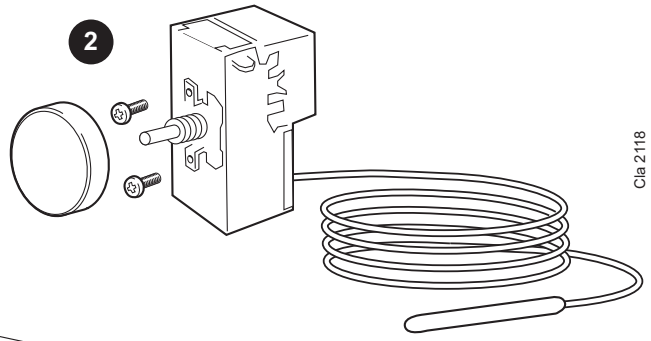

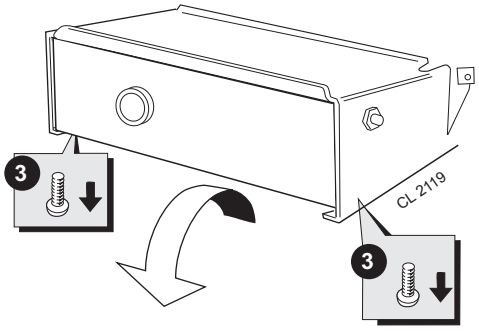

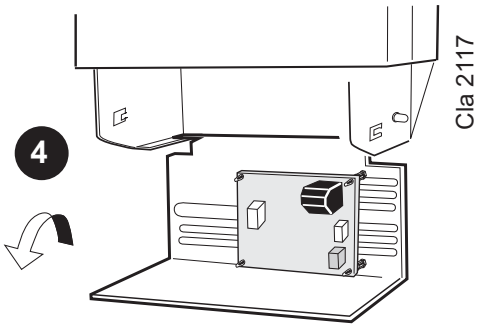

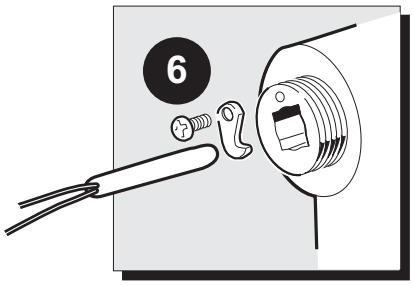

Cla2120

40 PILOT BURNER REPLACEMENT

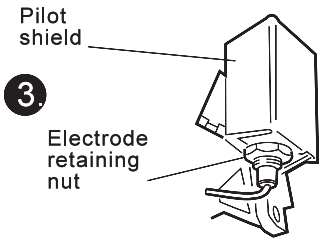

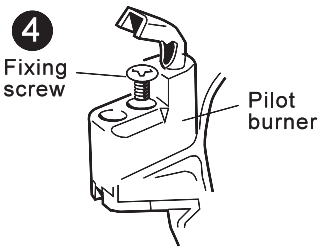

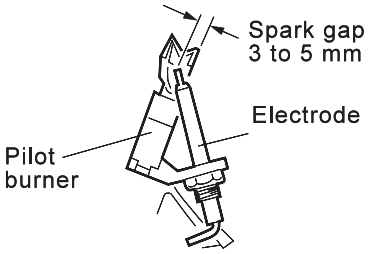

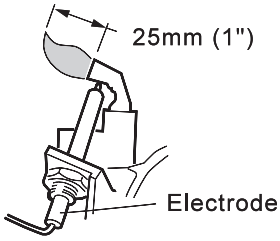

1. Refer to Frame 36.
2. Remove the burner and air box assembly. Refer to Frame 43.
3. Remove the electrode retaining nut and remove the pilot shield and electrode.
4. Unscrew the central pilot fixing screw and lift the pilot burner? clear of the pilot injector. If required, the pilot injector may now be unscrewed.
5. Replace the pilot burner (and injector if necessary) and retain with the M4 screw previously removed. Ensure that the copper sealing washer is replaced when refitting the pilot injector.
6. Replace the electrode and pilot shield - retaining both with the electrode nut. Check the spark gap.
7. Replace the airbox assembly .
8. Replace the burner.
9. Replace the boiler casing.
10. The pilot is factory set to maximum and no further adjustment is possible. Ensure that there is an inlet pressure of 20 mbar available. Also check burner ignition and cross-lighting.

41 IGNITION ELECTRODE AND LEAD REPLACEMENT

1. Refer to Frame 36.
2. Remove the burner and air box assembly. Refer to Frame 43.
3. Remove the electrode retaining nut.
4. Remove the pilot shield.
5. Remove the ignition electrode and integral lead.
6. Refit the new electrode and lead in reverse order. Ensure that the pilot shield is replaced.
7. Check the spark gap. Refer to Frame 40.
8. Refit the burner.
9. Check the pilot ignition.

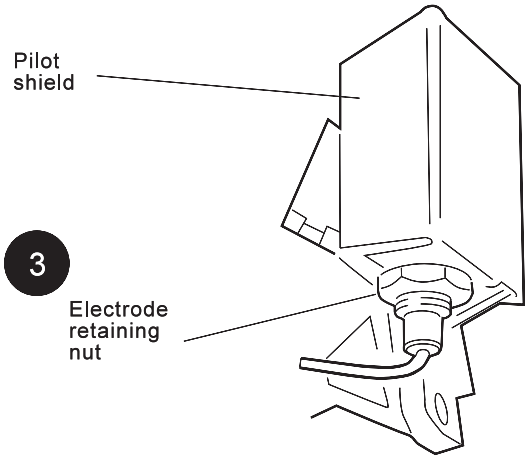

42 DETECTION ELECTRODE REPLACEMENT

1. Refer to Frame 36.
2. Pull the electrode and lead from the PCB connection.
3. Remove the bracket retaining screw.
4. Pull the bracket forward to disengage the rear retaining clip.
5. Remove the bracket.
6. Remove the screw retaining the detection electrode.
7. Fit new detection electrode and reassemble in reverse order.

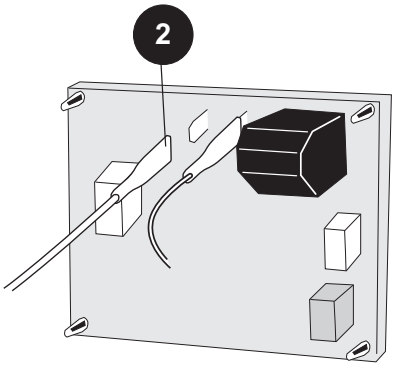

Clas 2122

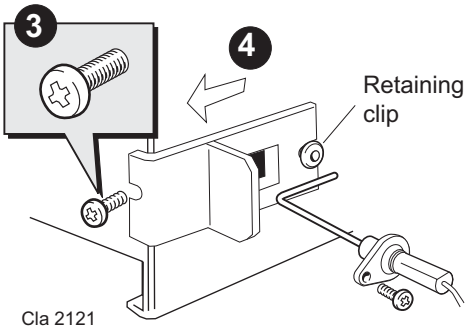

Cla 2121

43 MAIN BURNER AND MAIN BURNER INJECTOR REPLACEMENT

1. Refer to Frame 36.
2. Remove the screw retaining the front burner support strap to the combustion chamber.
3. Remove the M5 pozi screw, situated at the LH bottom rear of the burner. Pull the burner downward to disengage the retention tab and remove the burner.
4. At this stage the main burner injector can be removed, checked, cleaned or replaced as required. Ensure that an approved jointing compound is used sparingly.
5. Fit the new burner, ensuring that the retention tab is correctly located in the air box slot.
6. Refit the M5 retaining screw.
7. Refit the boiler casing.
9. Check the burner for cross-lighting and flame stability.

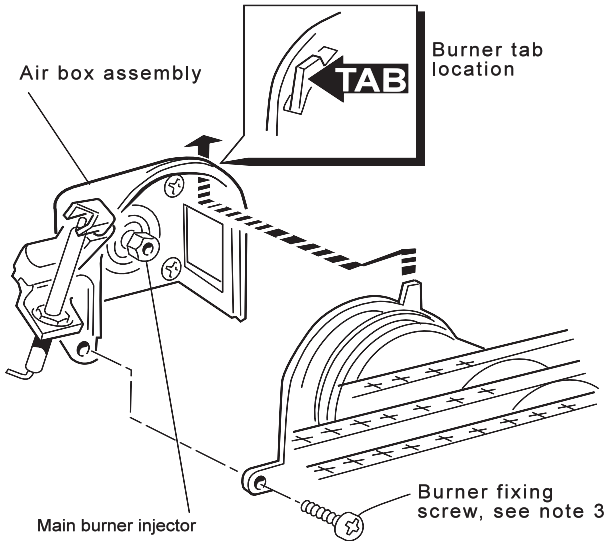

44 GAS CONTROL VALVE REPLACEMENT

Note. *Refer also to Frame 53 of 'Exploded Views' for illustration of the procedure detailed below.*

1. Refer to Frame 36.
2. Remove the burner and air box assembly. Refer to Frame 43.
3. Remove the control box securing screws. Pull the box forward and downward to disengage.
4. Remove the gas control valve electrical connection.
5. Disconnect and remove the gas union from the gas control valve.
6. Whilst supporting the gas control valve, remove the 2 screws retaining the manifold to the back panel.
7. Remove the gas control / manifold assembly.
8. Remove the 4 screws retaining the manifold to the gas control valve and fit the new manifold to the gas control valve, ensuring that it is fitted the correct way round (an arrow engraved on the back indicates the direction of flow).

   Note. *Remove the gas cock stub and refit into the new gas control valve. Use an approved jointing compound on the pipe stub.*
9. Reassemble in reverse order.
10. Replace the boiler casing.
11. Check the gas valve operation.

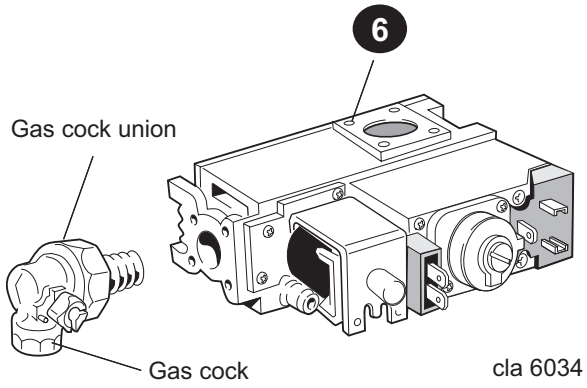

45 PRINTED CIRCUIT BOARD (PCB) REPLACEMENT

Note. *Refer to Frame 52 of 'Exploded Views' for illustration of the procedure detailed below.*

1. Refer to Frame 36.
2. Remove the control box fixing screws. Pull the box forward and downward to disengage.
3. Remove the HT lead from the PCB.
4. Transfer, *one by one* (to avoid confusion), all push-in connectors to the new PCB.
5. Compress the barbs on the PCB stand-offs to release the PCB from the box.
6. Fit the new PCB and reassemble in reverse order.
7. Refit the boiler casing.
8. Check the operation of the boiler.

46 COMBUSTION CHAMBER INSULATION REPLACEMENT

1. Refer to Frame 36.
2. Remove the burner and air box assembly. Refer to Frame 43.
3. Remove the 4 tie rods.
4. Remove the combustion chamber.
5. Remove the 2 side panel retaining brackets.
6. Remove the side insulation panels.
7. Remove the front and rear insulation panels.
8. Fit the new front and rear insulation panels.
9. Fit the new side panels and retain with the brackets and screws previously removed.
10. Reassemble in reverse order.

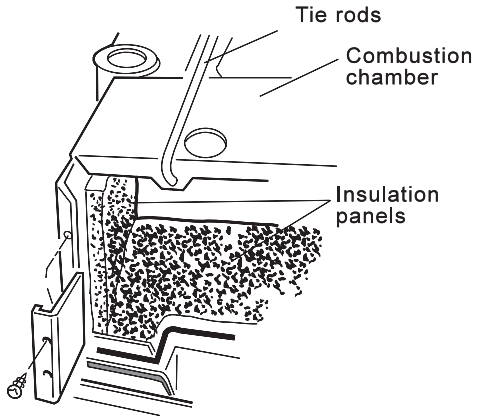

47 HEAT EXCHANGER REPLACEMENT

Note. *Refer to Frame 3 (Boiler Assembly - Exploded view) for illustration of the procedure detailed below.*

1. Refer to Frame 36.
2. Remove the burner / air box assembly. Refer to Frame 43.
3. Drain the system.
4. Disconnect the water connections. If compression fittings are used then cut the pipes both above and below the fittings in order to allow the heat exchanger assembly to be removed. Remove the heat exchanger drain plug and drain the residual water into a suitable receptacle.
5. Remove the collector hood assembly. Refer to Frame 3
6. Remove the combustion chamber by unscrewing the 4 tie rods and removing the detection electrode. Refer to Frame 42.
7. Remove the thermostat sensors from the pockets on the heat exchanger by removing the M3 screws and plates.
8. Slacken 3 turns only the 4 heat exchanger / inter-panel retaining screws.
9. Lift the heat exchanger / inter-panel assembly upward and forward to disengage key hole fixings. Pull the assembly downward to clear the water pipes from the back panel.
10. Remove the 2 rubber sealing grommets from the top of the back panel to facilitate fitting the new assembly.
11. Fit the new heat exchanger assembly, complete with water pipes, and hang it on the key hole slots and screws. Retighten the screws.
12. Replace the 2 rubber sealing grommets.
13. Reassemble in reverse order.
14. Remake all water connections, ensuring that the compression fittings (if used) are correctly refitted.
15. Fully test all functions, including water and gas soundness.

48 CASING SEAL REPLACEMENT

1. Refer to Frame 36.
2. Remove the old seal from the casing surround and thoroughly clean the casing surfaces
3. Fit the new adhesive seals.
4. Replace the boiler casing.

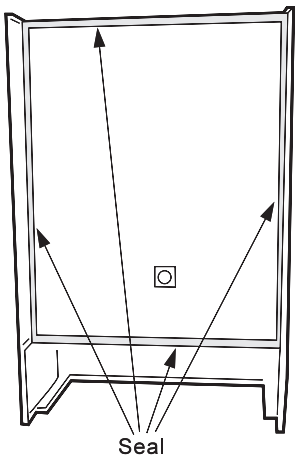

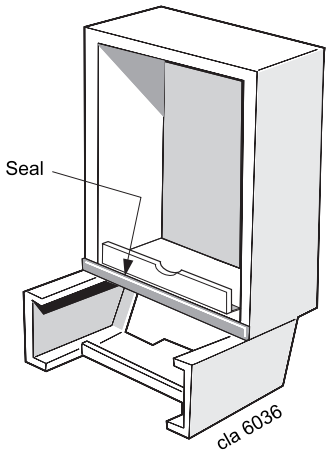

49 PROGRAMMER REPLACEMENT (if fitted)

1. Refer to Frame 36.
2. Remove the fixing screws and swing the control box down into the servicing position.
3. Pull off the terminal connections from back of the programmer.
4. Compress the lugs at each side of the programmer and withdraw it from the control panel.
5. Fit the new programmer in reverse order.
6. Set the programmer to the desired programme and check the operation of the boiler.

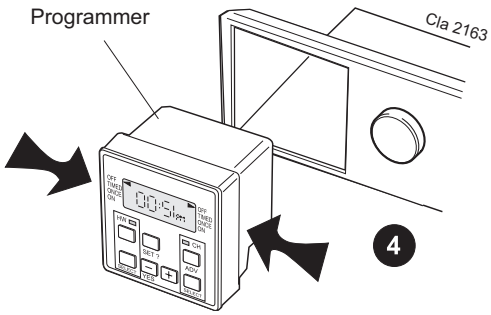

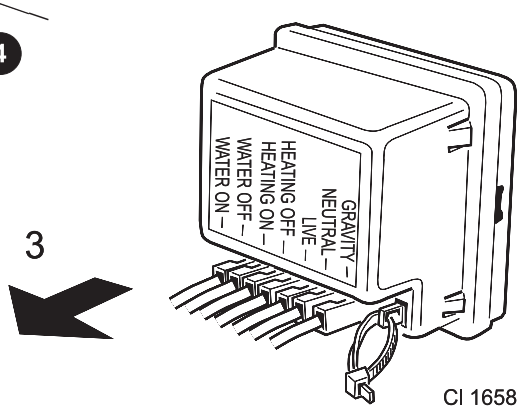

FAULT FINDING

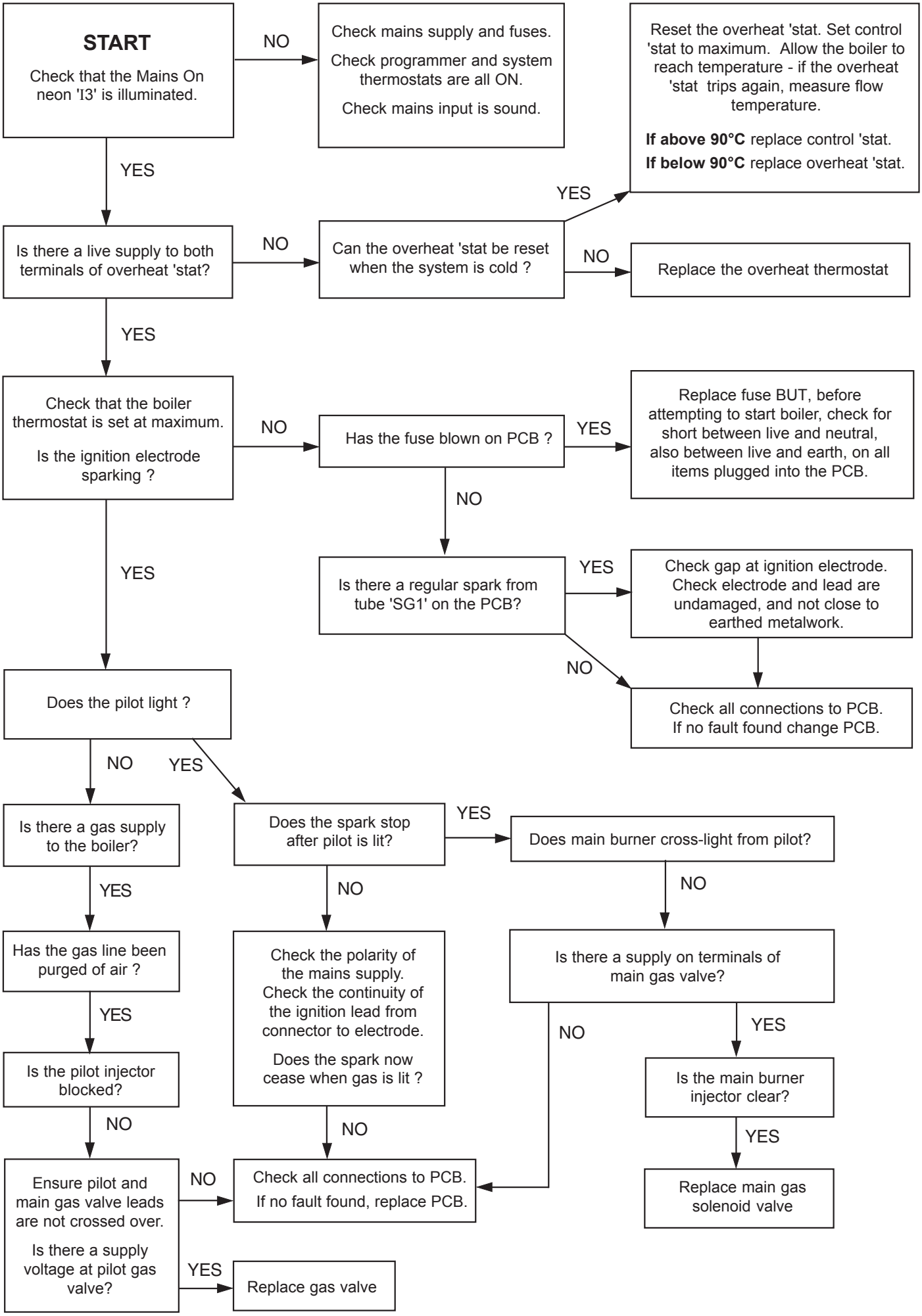

SHORT LIST OF PARTS

The following list is comprised of parts commonly required as replacement components, due to damage or expendability. Their failure or absence is likely to affect safety or performance.

The list is extracted from the British Gas List of Parts, which contains all available spare parts.

The full list is held by British Gas, **Caradon Ideal Limited** distributors and merchants.

When ordering please quote:

1. Boiler model
2. Appliance G.C. number
3. Description
4. Quantity
5. Product no.

When replacing any part on this appliance, use only spare parts that you can be assured conform to the safety and performance specification that we require. Do not use reconditioned or copy parts that have not been clearly authorised by **Ideal Boilers.**

Key No.	G.C. Part No.	Description		Qty.	Product No.
9	E83-619	Sightglass assembly kit.		1	171 414
12	E72-531	Main burner	SE9 RS & SE12 RS	1	171 013
	E85-891	Main burner	SE15 RS & SE18 RS	1	171 416
13	E83-624	Main burner injector	SE9 RS & SE12 RS	1	171 425
	E83-625	Main burner injector	SE15 RS	1	171 426
	E83-626	Main burner injector	SE18 RS	1	171 427
14	E83-627	Pilot burner injector		1	171 434
15	E83-630	Pilot burner head with injector		1	171 438
17	E83-633	Gas valve kit		1	171 441
18.1	E85-893	Detection electrode		1	171 973
19	E85-894	Control box assembly & PCB		1	171 928
23	E82-596	Automatic ignition PCB		1	171 450
25	E85-895	Boiler thermostat		1	171 970
26	E85-896	Thermostat knob		1	171 929
35	H09-107	Boiler casing assembly complete	SE9 RS & SE12RS	1	173 590
	H09-108		SE15 RS & SE18 RS	1	173 591
37	H09-109	Controls casing door complete		1	173 592
39		Casing sealing kit		1	079 594
45	E83-682	Overheat thermostat		1	171 950

50 SHORT PARTS

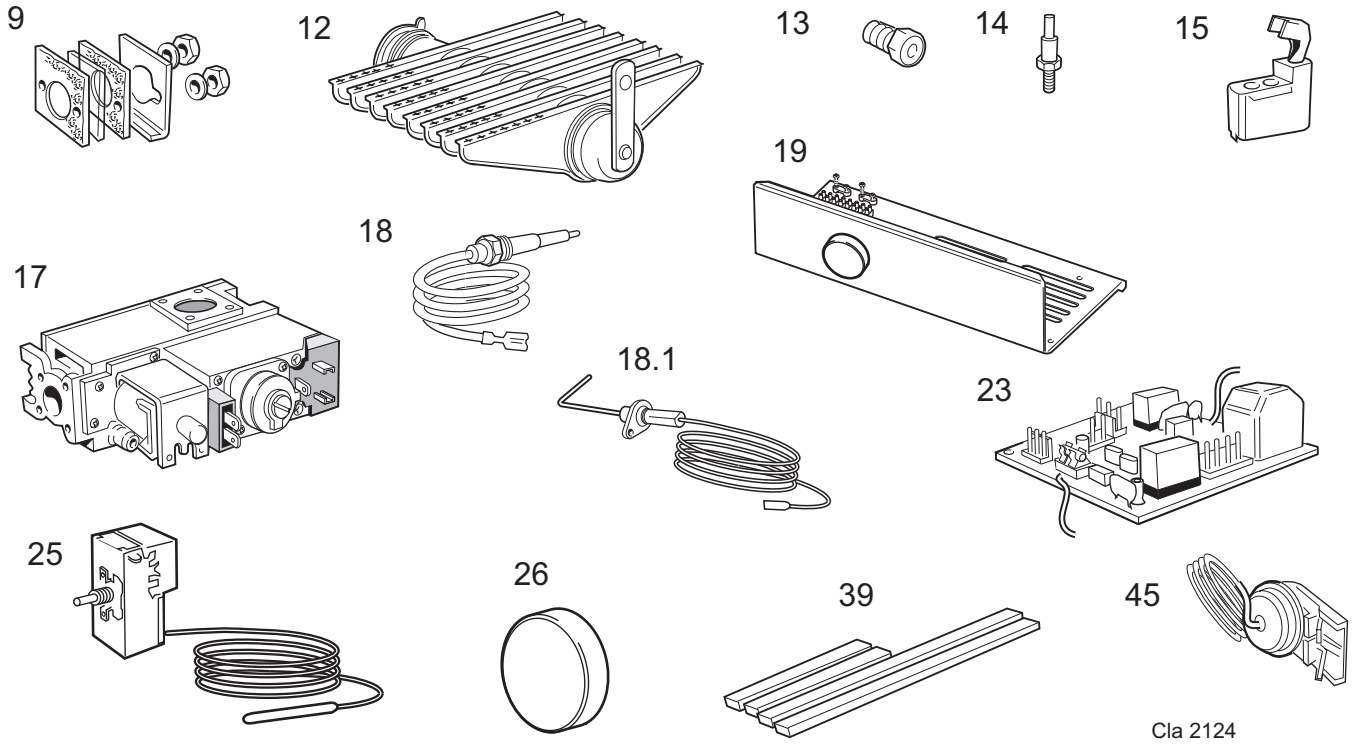

51 BOILER CASING ASSEMBLY

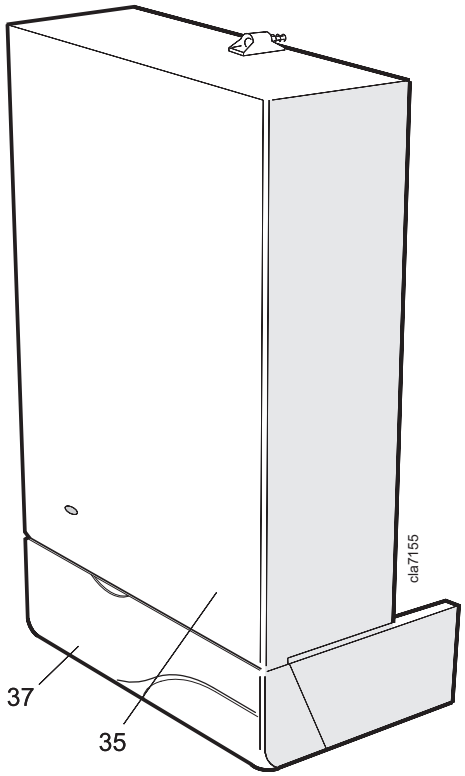

52 CONTROL BOX - Exploded View

LEGEND

19. Control box

25. Boiler thermostat

23. Printed circuit board

26. Thermostat knob

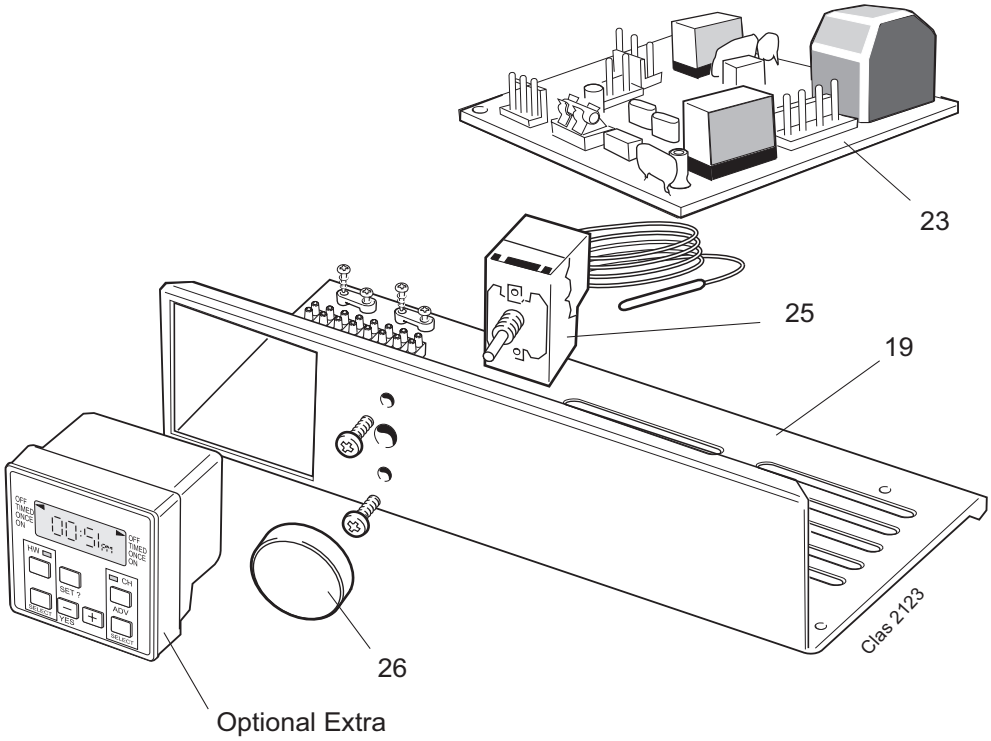

53 BURNER ASSEMBLY - Exploded view

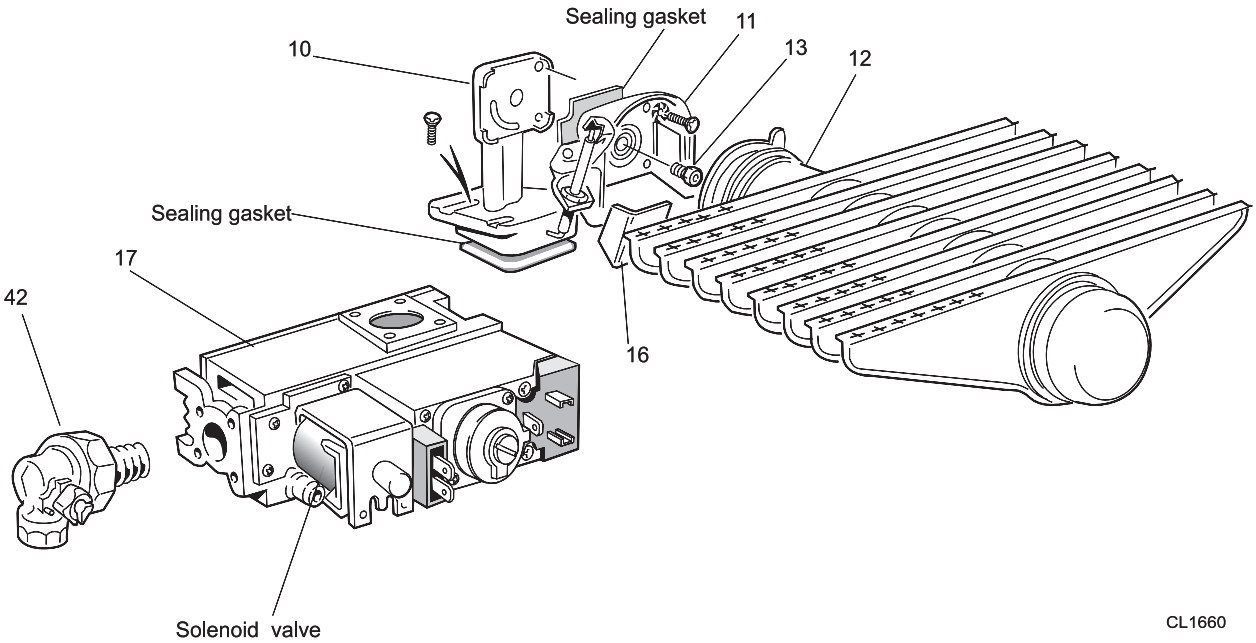

LEGEND

10. Burner manifold

11. Air box and pilot assembly.

12. Main burner.

13. Main burner injector.

16. Pilot shield.

17. Gas control valve.

42. Gas service cock.

benchmark™

The code of practice for the installation, commissioning & servicing of central heating systems

CERTIFIED TO BRITISH STANDARDS BS6332 BS5258

THIS SYMBOL IS YOUR ASSURANCE OF QUALITY

These appliances are designed for use with Natural Gas only. They have been tested and conform with the provisions of BS. 6332 and BS. 5258.

Technical Training

The Ideal Boilers Technical Training Centre offers a series of first class training courses for domestic, commercial and industrial heating installers, engineers and system specifiers. For details of courses please ring: 01482 498 432

CERTIFIED PRODUCT
Manufactured under a BS EN ISO 9001: 2000 Quality System accepted by BSI

Ideal Boilers, P.O. Box 103, National Ave, Kingston upon Hull, HU5 4JN. Telephone: 01482 492 251 Fax: 01482 448 858. Registration No. London 322 137.

Caradon Ideal Limited pursues a policy of continuing improvement in the design and performance of its products. The right is therefore reserved to vary specification without notice.

CE

Ideal BOILERS

Caradon
Ideal Limited

Ideal Installer/Technical Helpline: 01482 498663

www.idealboilers.com