installation and servicing

PAKAGED BOILER CONTENTS HAVE BEEN CHECKED BY OPERATOR No.....	

IDEAL ESPRIT

Your Ideal installation and servicing guide

For details of document amendments, refer to page 3

HE24, HE30, HE35

For users guide see reverse of book

spares & parts online
IBASIS.co.uk©

When replacing any part on this appliance, use only spare parts that you can be assured conform to the safety and performance specification that we require. Do not use reconditioned or copy parts that have not been clearly authorised by Ideal Boilers.

September 2008 UIN 203642 A06

For the very latest copy of literature for specification purposes please visit our website www.idealboilers.com where you will be able to download the relevant information in pdf format.

Ideal BOILERS
The High Efficiency Pioneers

DOCUMENT AMENDMENTS

Relevant Installation changes implemented in this book from Mod Level ..... A05 (Mar 08) **A06** (Sep 08)

Page 6, - Optional Extra Kits
- Additional text to include Adjustable Support Bracket

Page 10, Frame 2 - Boiler Dimensions, Services & Clearances
- Pictorial change to illustrate wall mounting template

Page 17, Frame 10 - Flue Lengths
- Additional text in notes to include information on support bracket and lubricant

Page 20, Frame 17 - Flue Extension Ducts
- Additional text to include information on lubricant

Page 22, Frame 22 - Condensate Pipe Termination Configurations
- Pictorial change to drawing 2

Page 23, Frame 23 - Condensate Pipe Termination Configurations
- Pictorial change to note 3

Page 25, Frame 26 - Roof Flue Kit Contents/Options
- Diagram change to include Flue Duct Support

Page 29 & 30, Frame 31 - Water and Gas Connections
- Pictorial changes

Page 31, Frame 34 - Electrical Connections - Installer Wiring
- Pictorial changes to Diagram A and B

Page 33, Frame 36 - Pictorial Wiring Diagram
- Colour changes made to Diverter Valve

Page 39, Frame 44 - Servicing Schedule
- Additional text added to note 4 with reference to Ionisation probes as a serviceable item

Page 47, Frame 63 - Combustion Chamber Insulation Replacement
- Additional text added to note 6 with reference to Ionisation probes as a serviceable item

Ideal Stelrad Group reserve the right to vary specification without notice

GENERAL

Table 1 - General Data

Esprit			HE24	HE30	HE35
Gas supply			2H - G20 - 20mbar		
Gas Supply Connection			Rc 1/2 (1/2" BSP female)		
Injector Size			Stereomatic 5.6mm dia.		5.7mm dia
Inlet Connection	Domestic Hot Water		15mm copper compression		
Outlet Connection	Domestic Hot Water		15mm copper compression		
Flow Connection	Central Heating		22mm copper compression		
Return Connection	Central Heating		22mm copper compression		
Flue Terminal Diameter		mm (in)	100 (4)		
Average Flue Temp-Mass Flow Rate		(DHW)	66°C-10g/s	74°C - 12 g/s	82°C-14g/s
Maximum Working Pressure (Sealed Systems)		bar (lb/in²)	2.5 (36.3)		
Maximum Domestic Hot Water Inlet Pressure*		bar (lb/in²)	10.0 (145)		
Minimum Domestic Hot Water Inlet Pressure		bar (lb/in²)	1.0	1.3	1.7**
Electrical Supply			230 V ~ 50 Hz.		
Power Consumption			140 W	175 W	177 W
Fuse Rating			External : 3A Internal : T3.15A L250 V		
Water content	Central Heating	litre (gal)	2.0 (0.44)		
	Domestic Hot Water		0.5 (0.11)		
Packaged Weight		kg (lb)	54.5 (120)	54.8 (121)	55.1 (122)
Maximum Installation Weight		kg (lb)	46.8 (103)	47.1 (104)	47.4 (105)
Boiler Casing Size	Height	mm (in)	750 (29 1/2)		
	Width	mm (in)	450 (17 3/4)		
	Depth	mm (in)	330 (13)		

**Required for maximum flow rate. Boiler operates down to 0.2 bar.*
***Note: in areas of low water pressure the DHW restrictor can be removed (Refer to Frame 4).*

Table 2 - Performance Data - Central Heating

Boiler Input :			Max.	Min.
Boiler Input 'Q'	Nett CV	kW	24.4	9.1
		(Btu/h)	(83 300)	(31 000)
	Gross CV	kW	27.1	10.1
		(Btu/h)	(92 500)	(34 400)
Gas Consumption		l/s	0.70	0.26
		(ft³/h)	(89.0)	(33.1)
Boiler Output :				
Non Condensing		kW	23.8	8.8
70°C Mean Water temp.		(Btu/h)	(81 200)	(30 000)
Condensing		kW	25.4	9.6
40°C Mean Water temp.		(Btu/h)	(86 700)	(32 800)
Seasonal efficiency*	(SEDBUK)		Band A [90.0]%	
NOx Classification			Class 5	

Table 3 - Performance Data - Domestic Hot Water

Maximum DHW Input :			HE24	HE30	HE35
	Nett CV	kW	24.3	30.2	36.0
		(Btu/h)	(82 900)	(103 000)	(122 800)
	Gross CV	kW	27.0	33.5	39.9
		(Btu/h)	(92 100)	(114 400)	(136 200)
Gas Consumption		l/s	0.7	0.87	1.03
		(ft³/h)	(89.0)	(110)	(131)
Maximum DHW Output		kW (Btu/h)	23.4 (80 000)	29.3 (100 000)	35.2 (120 000)
DHW Flow Rate at 35°C temp. rise.		l/min (gpm)	9.6 (2.1)	12.0 2.6	14.4 (3.2)
DHW Specific Rate		l/min (gpm)	11.2 (2.5)	14.0 (3.1)	16.8 (3.7)

** The value is used in the UK Government's Standard Assessment Procedure (SAP) for energy rating of dwellings. The test data from which it has been calculated have been certified by a notified body.*

Note. *Gas consumption is calculated using a calorific value of 38.7 MJ/m³ (1038 Btu/ft³) gross or 34.9 MJ/m³ (935 Btu/ft³) nett*

To obtain the gas consumption at a different calorific value:

a. ***For l/s****- divide the gross heat input (kW) by the gross C.V. of the gas (MJ/m³)*

b. ***For ft³/h*** *- divide the gross heat input (Btu/h) by the gross C.V. of the gas (Btu/ft³)*

Key to symbols

GB = United Kingdom **IE** = Ireland (Countries of destination)

PMS = Maximum operating pressure of water

C_{13} C_{33} C_{53} = A room sealed appliance designed for connection via ducts to a horizontal or vertical terminal, which admits fresh air to the burner and discharges the products of combustion to the outside through orifices which, in this case, are concentric. The fan is up stream of the combustion chamber.

I_{2H} = An appliance designed for use on 2nd Family gas, Group H only.

CAUTION. To avoid the possibility of injury during the installation, servicing or cleaning of this appliance care should be taken when handling edges of sheet steel components

Esprit

Natural Gas only

Boiler size	G.C. Appliance No. (Benchmark No.)	PI No.
HE24	47 348 46	87 BS 051
HE30	47 348 47	87 BS 051
HE35	47 348 48	87 BS 051

Destination Country: GB, IE

CONTENTS

Air Supply 8
Benchmark Commissioning Checklist 70
Boiler Clearances 10
Boiler Exploded Diagram 15
Condensate Drain 11,22,23
Electrical Connections 30
Extension Ducts - Fitting 20
Fault Finding 60-64
Flow Wiring Diagram 33
Flue Fitting 18
Flue Installation 8
Gas Safety Regulations 7
Gas Supply 8
Installation 13-38
Mandatory Requirements 7-11
Safe Handling 7
Servicing 39-58
Short List of Parts 65
Thermostatic Radiator Valves 11
Water and Systems 8,11-13
Water Connections 29
Water Treatment 13
Wiring Diagrams 33-34

For GB, to comply with Building Regulations Part L1 (Part 6 in Scotland) the boiler should be fitted in accordance with the manufacturer's instructions. Self-certification that the boiler has been installed to comply with Building Regulations can be demonstrated by completing and signing the Benchmark Commissioning Checklist.

BENCHMARK COMMISSIONING CHECKLIST DETAILS

Boiler	**Page**
Make and model	5
Appliance serial no. on data badge	14
SEDBUK No. %	4
Controls	
Time and temperature control to heating	31
Time and temperature control to hot water	31
Heating zone valves	n/a
TRV's	11
Auto bypass	11
Boiler interlock	11
For all boilers	
Flushing to BS.7593	13
Inhibitor	13
Central heating mode	
Heat input	to be calculated
Burner operating pressure	n/a
Central heating flow temp.	measure and record
Central heating return temp.	measure and record
For combination boilers only	
Scale reducer	n/a
Hot water mode	
Heat input	to be calculated
Max. operating burner pressure	n/a
Max. operating water pressure	measure & record
Cold water inlet temp	measure & record
Hot water outlet temp.	measure & record
Water flow rate at max. setting	measure & record
For condensing boilers only	
Condensate drain	22

For all boilers: *complete, sign & hand over to customer*

For assistance see Technical Helpline on the back page

NOTE TO THE INSTALLER: COMPLETE THE BENCHMARK COMMISSIONING CHECKLIST AND LEAVE THESE INSTRUCTIONS WITH APPLIANCE

benchmark
COLLECTIVE MARK
THE MARK OF QUALITY FOR THE INSTALLATION, COMMISSIONING AND SERVICING OF DOMESTIC HEATING AND HOT WATER SYSTEMS

INTRODUCTION

The **Esprit** range of boilers are wall mounted, full sequence, automatic spark ignition, low water content, fanned flue, high efficiency, condensing, combination gas boilers.

Note. *Due to the high efficiency of the boiler a plume of water vapour will form at the terminal during operation.*

Central heating (CH) output is fully modulating with a range of 8.8 to 23.4kW (30,000 to 80,000 Btu/h)

Instantaneous domestic hot water (DHW) output is also fully modulating with a maximum of :

HE24 23.4kW (80,000 Btu/h)

HE30 29.3kW (100,000 Btu/h)

HE35 35.2kW (120,000 Btu/h)

The boiler is supplied fully assembled with DHW plate heat exchanger, diverter valve, circulating pump, pressure gauge, safety valve and CH expansion vessel.

Variable CH and DHW temperature controls are fitted on the user control and the boiler features a DHW preheat facility and a preheat ON/OFF switch.

The boiler temperature controls are accessible behind the casing lower door.

The heat exchanger is of cast aluminium.

The boiler is suitable for connection to fully pumped, sealed water systems ONLY. Adequate arrangements for completely draining the system by provision of drain cocks MUST be provided in the installation pipework.

Pipework from the boiler is routed downwards as standard, but may be routed upwards behind the boiler using the stand-off frame (supplied in a separate kit).

The boiler includes a filling loop, an automatic by-pass and a 75mm condensate trap with integral siphon. Boiler frost protection is included as standard.

OPERATION

With no demand for CH, the boiler fires only when DHW is drawn off, or periodically for a few seconds without any DHW draw-off, in order to maintain the DHW calorifier in a heated condition. (This facility can be turned off if required).

When there is a demand for CH, the heating system is supplied at the selected temperature of between 30 °C and 82°C, until DHW is drawn off. The full output from the boiler is then directed via the diverter valve to the plate heat exchanger to supply a nominal DHW draw-off of

HE24 9.6 l/min at 35 °C temperature rise.

HE30 12 l/min at 35 °C temperature rise.

HE35 14.4 l/min at 35 °C temperature rise.

The DHW draw off rate specified above is the nominal that the boiler flow regulator will give. Due to system variations and seasonal temperature fluctuations DHW flow rates/ temperature rise will vary, requiring adjustment at the draw off tap.

At low DHW draw-off rate the maximum temperature is limited to 65 °C by the modulating gas control.

Refer also to Frame 1 - 'Boiler Water Circuit Diagrams'

The boiler features a comprehensive diagnostic system which gives detailed information on the boiler status when operating, and performance of key components to aid commissioning and fault finding.

SAFE HANDLING

This boiler may require 2 or more operatives to move it to its installation site, remove it from its packaging base and during movement into its installation location. Manoeuvring the boiler may include the use of a sack truck and involve lifting, pushing and pulling.

Caution should be exercised during these operations.

Operatives should be knowledgeable in handling techniques when performing these tasks and the following precautions should be considered:

- Grip the boiler at the base.
- Be physically capable.
- Use PPE as appropriate, e.g. gloves, safety footwear.

During all manoeuvres and handling actions, every attempt should be made to ensure the following unless unavoidable and/or the weight is light.

- Keep back straight.
- Avoid twisting at the waist.
- Avoid upper body/top heavy bending.
- Always grip with the palm of the hand.
- Use designated hand holds.
- Keep load as close to the body as possible.
- Always use assistance if required.

OPTIONAL EXTRA KITS

- **Flue Extension Ducts.** (1000mm long).
  HE24-upto 6m
  HE30-upto 6m
  HE35-upto 3m
- **Flue Finishing Kit.**
- **90° Elbow Kit** (maximum per installation).
  HE24-upto 4 elbows
  HE30-upto 4 elbows
  HE35-upto 2 elbows
- **45° Elbow Kit** (maximum per installation).
  HE24-upto 4 elbows
  HE30-upto 4 elbows
  HE35-upto 2 elbows
- **Roof Flue Kit** (to a maximum of 7.5m).
- **Powered Vertical Flue Kit** (5m primary and 17m secondary is a typical maximum length. For alternative details refer to Powered Vertical Instructions).
- **High Level Flue Outlet Kits**
- **Flue Deflector Kit**
- **Weather Collars**
- **Twin Fluing Kits 80mm diameter** (up to a maximum of 60m combined total flue and airducts)
- **Twin Fluing Kits 60mm diameter** (up to a maximum of 18m combined total flue and airducts)
- **Horizontal Flue Terminal 600mm long**
- **Adjustable Flue Support Bracket**
- **Boiler Stand-off Kit**
- **Condensate Pump Kit**
- **Programmer Kit** - Mechanical 24 hour
- **Programmer Kit** - Electronic 7 day
- **RF Thermostat/Programmer Kit** - Mechanical 24 hour
- **RF Thermostat/Programmer Kit** - electronic 7 day

SAFETY

Current Gas Safety (installation and use) regulations or rules in force:

The appliance is suitable only for installation in GB and IE and should be installed in accordance with the rules in force.

In GB, the installation must be carried out by a CORGI Registered Installer. It must be carried out in accordance with the relevant requirements of the:

- Gas Safety (Installation and Use) Regulations
- The appropriate Building Regulations either The Building Regulations, The Building Regulations (Scotland), Building Regulations (northern Ireland).
- The Water Fittings Regulations or Water byelaws in Scotland.
- The Current I.E.E. Wiring Regulations.

Where no specific instructions are given, reference should be made to the relevant British Standard Code of Practice.

In IE, the installation must be carried out by a Competent Person and installed in accordance with the current edition of I.S.813 "Domestic Gas Installations", the current Building Regulations and reference should be made to the current ETCI rules for electrical installation.

Detailed recommendations are contained in the following British Standard Codes of Practice:

BS. 5440:1 Flues (for gas appliances of rated input not exceeding 70 kW).

BS. 5440:2 Ventilation (for gas appliances of rated input not exceeding 70 kW).

BS. 5449 Forced circulation hot water systems.

BS. 5546 Installation of gas hot water supplies for domestic purposes (2nd Family Gases)

BS. 6798 Installation of gas fired hot water boilers of rated input not exceeding 70 kW.

BS. 6891 Low pressure installation pipes.

Health & Safety Document No. 635.

The Electricity at Work Regulations, 1989.

The manufacturer's notes must NOT be taken, in any way, as overriding statutory obligations.

IMPORTANT. These appliances are CE certificated for safety and performance. It is, therefore, important that no external control devices, e.g. flue dampers, economisers etc., are directly connected to these appliances unless covered by these Installation and Servicing Instructions or as otherwise recommended by **Ideal Stelrad Group** in writing. If in doubt please enquire.

Any direct connection of a control device not approved by **Ideal Stelrad Group** could invalidate the certification and the normal appliance warranty. It could also infringe the Gas Safety Regulations and the above regulations.

SAFE HANDLING OF SUBSTANCES

Care should be taken when handling the boiler insulation panels, which can cause irritation to the skin. No asbestos, mercury or CFCs are included in any part of the boiler or its manufacture.

LOCATION OF BOILER

The boiler must be installed on a flat and vertical wall, capable of adequately supporting the weight of the boiler and any ancillary equipment.

The boiler may be fitted on a combustible wall and insulation between the wall and the boiler is not necessary, unless required by the local authority.

For electrical safety reasons there must be no access available from the back of the boiler.

The boiler must not be fitted outside.

Timber Framed Buildings

If the boiler is to be fitted in a timber framed building it should be fitted in accordance with the Institute of Gas Engineering document IGE/UP/7:1998.

Bathroom Installations

This appliance is rated **IP20.**

The boiler may be installed in any room or internal space, although particular attention is drawn to the requirements of the current IEE (BS.7671) Wiring Regulations and, in Scotland, the electrical provisions of the building regulations applicable in Scotland, with respect to the installation of the boiler in a room or internal space containing a bath or shower. For IE reference should be made to the current ETCI rules for electrical installations and I.S. 813:2002.

If the appliance is to be installed in a room containing a bath or shower then, providing water jets are not going to be used for cleaning purposes (as in communal baths/showers), the appliance can be installed in Zone 3, as detailed in BS.7671.

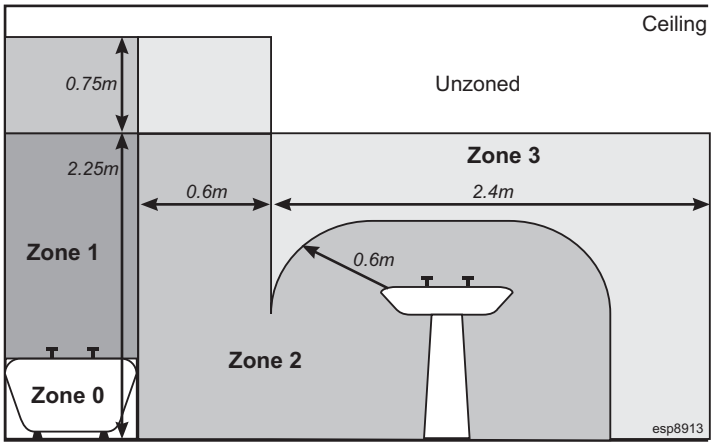

Compartment Installations

A compartment used to enclose the boiler should be designed and constructed specially for this purpose.

An existing cupboard or compartment may be used, provided that it is modified for the purpose.

In both cases, details of essential features of cupboard / compartment design, including airing cupboard installation, are to conform to the following:

- BS 6798 (No cupboard ventilation is required - see 'Air Supply' for details).
- The position selected for installation MUST allow adequate space for servicing in front of the boiler.
- For the minimum clearances required for safety and subsequent service, see Frame 2. In addition, sufficient space may be required to allow lifting access to the wall mounting plate.

GAS SUPPLY

The local gas supplier should be consulted, at the installation planning stage, in order to establish the availability of an adequate supply of gas. An existing service pipe must NOT be used without prior consultation with the local gas supplier.

The boiler MUST be installed on a gas supply with a governed meter only.

A gas meter can only be connected by the local gas supplier or by a CORGI registered engineer. In IE by a competent person.

An existing meter should be checked, preferably by the gas supplier, to ensure that the meter is adequate to deal with the rate of gas supply required.

N.B. The principle of the 1:1 gas valve ensures that the **Esprit HE** range is able to deliver it's full output at inlet pressures down to 14mb. However if dynamic pressures below 20mb are experienced ensure this is adequate for **ALL** other gas appliances in the property.

IMPORTANT.

Installation pipes must be fitted in accordance with BS.6891. In IE refer to IS.813:2002. Pipework from the meter to the boiler MUST be of an adequate size, i.e. no longer than 20m and not less than 15mm O.D.

The complete installation MUST be tested for gas soundness and purged as described in the above code.

FLUE INSTALLATION

Pluming will occur at the terminal so terminal positions where this could cause a nuisance should be avoided.

The flue must be installed in accordance with the recommendations of BS. 5440-1: 2000.
In IE refer to I.S. 813:2002.

The following notes are intended for general guidance:

1. The boiler MUST be installed so that the terminal is exposed to external air.
2. It is important that the position of the terminal allows the free passage of air across it at all times.
3. Minimum acceptable spacing from the terminal to obstructions and ventilation openings are specified in Table 4.
4. Where the lowest part of the terminal is fitted less than 2m (6'6") above a balcony, above ground or above a flat roof to which people have access then the terminal MUST be protected by a purpose designed guard.

   Terminal guards are available from boiler suppliers. (Ask for TFC flue guard model no. K6 - round, plastic coated). In case of difficulty contact:

   Grasslin (UK) Ltd. Tel. + 44 (0) 01732 359 888
   Tower House, Vale Rise Fax. + 44 (0) 01732 354 445
   Tonbridge. Kent TN9 1TB www.tfc-group.co.uk

   Ensure that the guard is fitted centrally.
5. The flue assembly shall be so placed or shielded as to prevent ignition or damage to any part of any building.
6. The air inlet/products outlet duct and the terminal of the boiler MUST NOT be closer than 25mm (1") to combustible material. Detailed recommendations on the protection of combustible material are given in BS. 5440-1:2000.

Table 4 - Balanced Flue Terminal Position

Flue Terminal Positions	Min. Spacing*
1. Directly below, above or alongside an opening window, air vent or other ventilation opening.	300mm (12")
2. Below guttering, drain pipes or soil pipes. *BS5440-1 2000*	25mm (1")* *75mm (3")*
3. Below eaves. *BS5440-1 2000*	25mm (1")* *200mm (8")*
4. Below balconies or a car port roof. *BS5440-1 2000*	25mm (1")* *200mm (8")*
5. From vertical drain pipes or soil pipes. *BS5440-1 2000*	25mm (1")* *150mm (6")*
6. From an internal or external corner or to a boundary along side the terminal. *BS5440-1 2000*	25mm (1")* *300mm (12")*
7. Above adjacent ground, roof or balcony level.	300mm (12")
8. From a surface or a boundary facing the terminal.	600mm (24")
9. From a terminal facing a terminal.	1,200mm (48")
10. From an opening in a car port (e.g. door or window) into dwelling.	1,200mm (48")
11. Vertically from a terminal on the same wall.	1,500mm (60")
12. Horizontally from a terminal on the wall.	300mm (12")
Vertical Terminals	
13. Above the roof pitch with roof slope of all angles. Above flat roof.	300mm (12") 300mm (12")
14. From a single wall face. From corner walls.	300mm (12") 300mm (12")

** Only one reduction down to 25mm is allowable per installation otherwise BS5440-1 2000 dimensions must be followed.*

IMPORTANT. It is absolutely essential to ensure, in practice, that products of combustion discharging from the terminal cannot re-enter the building or any other adjacent building through ventilators, windows, doors, other sources of natural air infiltration, or forced ventilation / air conditioning.

If this should occur the appliance MUST be turned OFF, labelled as 'unsafe' until corrective action can be taken.

TERMINAL

The terminal assembly can be adapted to accommodate various wall thicknesses. Refer to Frame 10 .

AIR SUPPLY

It is NOT necessary to have a purpose-provided air vent in the room or internal space in which the boiler is installed. Neither is it necessary to ventilate a cupboard or compartment in which the boiler is installed, due to the low surface temperatures of the boiler casing during operation; therefore the requirements of BS 6798, Clause 12, and BS 5440:2 may be disregarded.

WATER CIRCULATION SYSTEM

IMPORTANT.
A minimum length of 1 metre of copper pipe MUST be fitted to both flow and return connections from the boiler before connection to any plastic piping.

The central heating system should be in accordance with BS.6798 and, in addition, for smallbore and microbore systems, BS.5449.

WATER TREATMENT - see Frame 6

1 BOILER WATER CIRCUIT DIAGRAMS

CENTRAL HEATING CIRCUIT

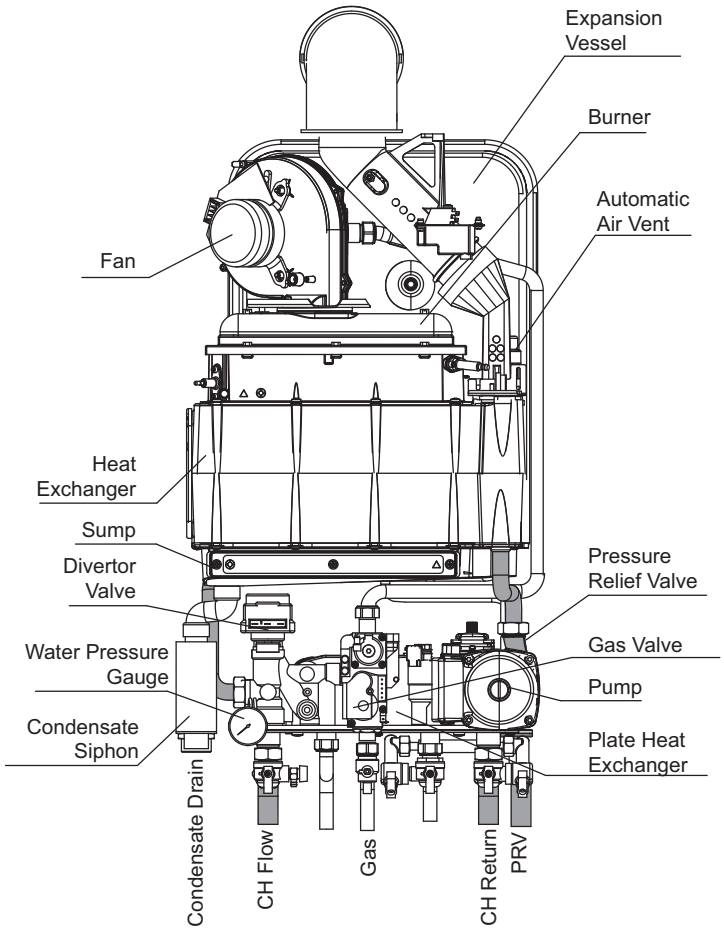

DOMESTIC HOT WATER CIRCUIT

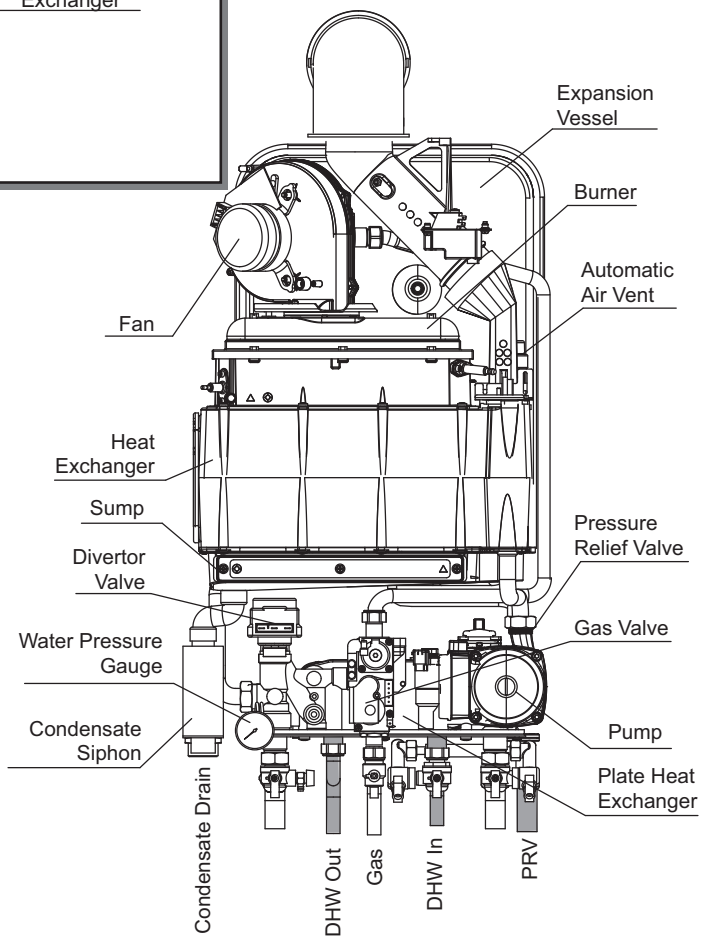

ESP8829

2 BOILER DIMENSIONS, SERVICES & CLEARANCES

all dimensions in mm

The boiler connections are made on the boiler. Refer to Frames 30.

The following minimum clearances must be maintained for operation and servicing.

Additional space will be required for installation, depending upon site conditions.

Side and Rear Flue
Provided that the flue hole is cut accurately, e.g. with a core drill, the flue can be installed from inside the building where wall thicknesses do not exceed 600mm. Where the space into which the boiler is going to be installed is less than the length of flue required the flue must be fitted from the outside.

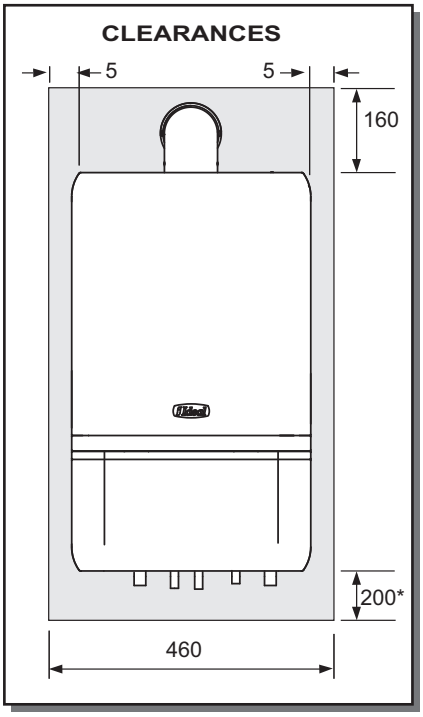

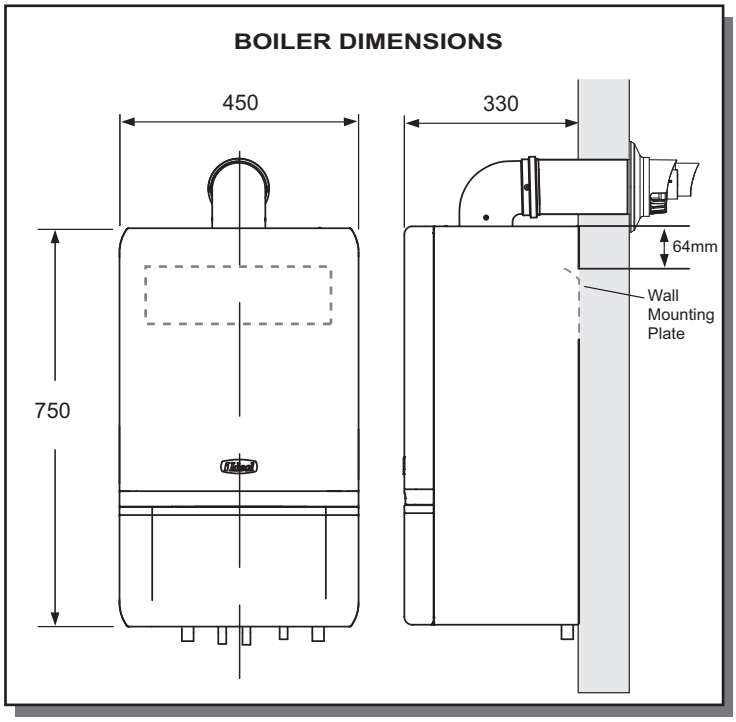

Front clearance - The minimum front clearance when built in to a cupboard is 5mm from the cupboard door but 450mm overall clearance is still required, with the cupboard door open, to allow for servicing.

* **Bottom clearance** - Bottom clearance after installation can be reduced to 5mm. However, 200mm must be available for servicing.

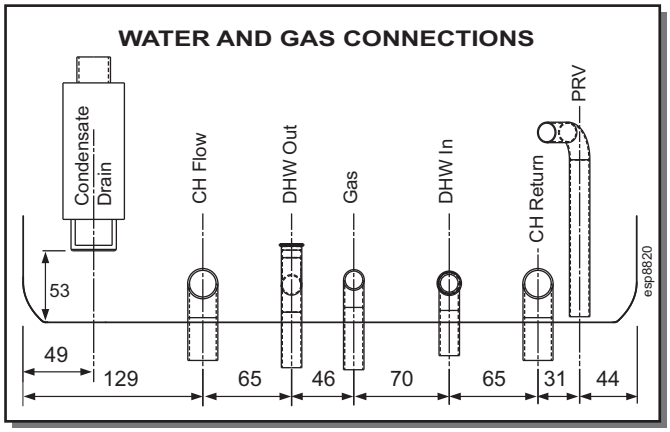

SIDE FLUE ONLY			
Horizontal length of flue from centre line of boiler to outside wall			Top clearance required (MIN.) Dim. A
HE24	HE30	HE35	
0.5 m	0.5 m	0.5 m	160 mm
1.0 m	1.0 m	1.0 m	170 mm
1.5 m	1.5 m	1.5 m	185 mm
2.0 m	2.0 m	2.0 m	200 mm
2.5 m	2.5 m	2.5 m	210 mm
3.0 m	3.0 m	3.0 m	225 mm
3.5 m	3.5 m	N/A	250 mm
4.0 m	4.0 m	N/A	260 mm
4.5 m	4.5 m	N/A	265 mm
5.0 m	5.0 m	N/A	275 mm
5.5 m	5.5 m	N/A	290 mm
6.0 m	6.0 m	N/A	300 mm

REAR FLUE ONLY
MIN. Top clearance required = 160 mm

BOILER CONTROL INTERLOCKS

Ideal Stelrad Group recommend that heating systems utilising full thermostatic radiator valve control of temperature in individual rooms should also be fitted with a room thermostat controlling the temperature in a space served by radiators not fitted with such a valve as stated in BS. 5449.

Central heating system controls should be installed to ensure the boiler is switched off when there is no demand for heating or hot water.

When thermostatic radiator valves are used, the space heating temperature control over a living / dining area or hallway having a heating requirement of at least 10% of the boiler heat output should be achieved using a room thermostat, whilst other rooms are individually controlled by thermostatic radiator valves. However, if the system employs thermostatic radiator valves on all radiators, or two port valves without end switches, then a bypass circuit is incorporated within the boiler to ensure a flow of water should all valves be in the closed position.

ELECTRICAL SUPPLY

WARNING.

This appliance must be earthed.

Wiring external to the appliance MUST be in accordance with the current I.E.E. (BS.7671) Wiring Regulations and any local regulations which apply. For IE reference should be made to the current ETCI rules for electrical installations.

The point of connection to the mains should be readily accessible and adjacent to the boiler.

N.B. THE FAN VOLTAGE IS 325VDC

CONDENSATE DRAIN Refer to Frames 21 & 49.

A condensate drain is provided on the boiler. This drain must be connected to a drainage point on site. All pipework and fittings in the condensate drainage system MUST be made of plastic - *no other materials may be used.*

IMPORTANT.

Any external runs must be insulated.

The drain outlet on the boiler is standard 21.5mm (3/4”) overflow pipe.

3 SYSTEM REQUIREMENTS - Central Heating

Notes

a. *The method of filling, refilling, topping up or flushing sealed primary hot water circuits from the mains via a temporary hose connection is only allowed if acceptable to the local water authority.*

b. *Antifreeze fluid, corrosion and scale inhibitor fluids suitable for use with boilers having aluminium heat exchangers may be used in the central heating system.*

Advice should be sought from a local water treatment company.

General

1. The installation must comply with all relevant national and local regulations.

2. The installation should be designed to work with flow temperatures of up to 82 °C.

3. All components of the system must be suitable for a working pressure of 3 bar and temperature of 110 °C. Extra care should be taken in making all connections so that the risk of leakage is minimised.

The following components are incorporated within the appliance:

a. Circulating pump.

b. Safety valve, with a non-adjustable preset lift pressure of 3 bar.

c. Pressure gauge, covering a range of 0 to 6 bar.

d. An 8-litre expansion vessel, with an initial charge pressure of 1.0 bar.

4. **'Make-up' Water.** Provision must be made for replacing water loss from the system, either :

a. From a manually filled 'make-up' vessel with a readily visible water level. The vessel should be mounted at least 150mm above the highest point of the system and be connected through a non-return valve to the system, fitted at least 150mm below the 'make-up' vessel on the return side of the radiators.

Safety valve setting	bar	3.0	
Vessel charge pressure	bar	0.5 to 0.75	
System pre-charge pressure	bar	None	1.0
System volume (litres)		**Expansion vessel volume (litres)**	
25		1.6	1.8
50		3.1	3.7
75		4.7	5.5
100		6.3	7.4
125		7.8	9.2
150		9.4	11.0
175		10.9	12.9
190		11.9	14.0
200		12.5	14.7
250		15.6	18.4
300		18.8	22.1
For other system volumes multiply by the factor across		0.063	0.074

or

b. Where access to a 'make-up' vessel would be difficult, by pre-pressurisation of the system.

The maximum cold water capacity of the system should not exceed 143 litres, if not pressurized. However, if the system is to be pressurized, the efficiency of the expansion vessel will be reduced and a larger vessel (or smaller system volume) may be necessary. If the capacity of the vessel is not considered sufficient for this, or for any other reason, an additional vessel MUST be installed on the return to the boiler.

Guidance on vessel sizing is given in Frame 3.

4 SYSTEM REQUIREMENTS - CH (continued) and Hot Water

5. Filling

Where the mains pressure is excessive a pressure reducing valve must be used to facilitate filling.

a. Thoroughly flush out the whole system with cold water.

b. Fill and vent the system until the pressure gauge registers 1.5 bar and examine for leaks.

c. Check the operation of the safety valve by raising the water pressure until the valve lifts. This should occur within 0.3 bar of the preset lift pressure.

d. Release water from the system until the minimum system design pressure is reached; 1.0 bar if the system is to be pre-pressurised.

Water Flow Rate and Pressure Loss

Max CH Output	kW	23.8
	(Btu/h)	(81 200)
Water flow rate	l/sec	0.38
	(gal/min)	4.8
Temperature Differential	°C	15
	(°F)	(27)
Head available for	m.w.g.	2.3
system pump.	(ft.w.g.)	7.5

DOMESTIC HOT WATER

1. The domestic hot water service must be in accordance with BS 5546 and BS 6700.

2. Refer to Table 1 for minimum and maximum working pressures.

In areas of low mains water pressures the domestic hot water restrictor may be removed from the inlet valve. The boiler will require the flow rate to be set to obtain a temperature rise of 35°C at the tap furthest from the boiler.

3. The boilers are suitable for connection to most types of washing machine and dishwasher appliances.

4. When connecting to suitable showers, ensure that:

a. The cold inlet to the boiler is fitted with an approved anti-vacuum or syphon non-return valve.

b. Hot and cold water supplies to the shower are of equal pressure.

5. Hard Water Areas
Where the water hardness exceeds 200mg/litre, it is recommended that a proprietary scale reducing device is fitted into the boiler cold supply within the requirements of the local water company.

IMPORTANT

Provision MUST be made to accommodate the expansion of DHW contained within the appliance, if a non-return valve is fitted to the DHW inlet.

5 SYSTEM BALANCING

The boiler is fitted with an automatic bypass.

BALANCING

1. Set the programmer to ON.

Close the manual or thermostatic valves on all radiators, leaving the twin lockshield valves (on the radiators referred to above) in the OPEN position.

Turn up the room thermostat and adjust these lockshield valves to give boiler flow and return temperatures not more than 20°C apart.

These valves should now be left as set.

2. Open all manual or thermostatic radiator valves and adjust the lockshield valves on the remaining radiators, to give around 15 °C temperature drop at each radiator.

3. Adjust the room thermostat and programmer to NORMAL settings.

See note regarding thermostatic radiator valves on page 11.

6 WATER TREATMENT

CENTRAL HEATING

The Esprit range of boilers have an ALUMINIUM alloy heat exchanger.

IMPORTANT.
The application of any other treatment to this product may render the guarantee of Ideal Stelrad Group.

Ideal Stelrad Group recommend Water Treatment in accordance with the Benchmark Guidance Notes on Water Treatment in Central Heating Systems.

If water treatment is used **Ideal Stelrad Group** recommend only the use of FERNOX-COPAL or MB1, GE BETZ SENTINEL X100 or Salamander Corrosion Guard inhibitors and associated water treatment products, which must be used in accordance with the manufacturers' instructions.

Notes.

1. *It is most important that the correct concentration of the water treatment products is maintained in accordance with the manufacturers' instructions.*
2. *If the boiler is installed in an existing system any unsuitable additives MUST be removed by thorough cleansing. BS 7593:1992 details the steps necessary to clean a domestic heating system.*
3. *In hard water areas, treatment to prevent lime scale may be necessary - however the use of artificially softened water is NOT permitted.*
4. *Under no circumstances should the boiler be fired before the system has been thoroughly flushed.*

DOMESTIC HOT WATER

In hard water areas where main water can exceed 200ppm Total Hardness (as defined by BS 7593:1993 Table 2) a scale reducing device should be fitted into the boiler cold supply within the requirements of the local water company. The use of artificially softened water, however, is not permitted.

Ideal Stelrad Group recommend the use of Fernox Qantomat, GE Betz Sentinel Combiguard and Calmag CalPhos I scale reducing devices, which must be used in accordance with the manufacturers' instructions.

For further information contact:

Fernox Manufacturing Co. Ltd
Cookson Electronics
Forsyth Road
Sheerwater
Woking
Surrey GU21 5RZ
+44 (0) 1799 521133

Sentinel Performance Solutions
The Heath Business & Technical Park
Runcorn
Cheshire WA7 4QX
Tel: 0800 389 4670
www.sentinel-solutions.net

Salamander Engineering Ltd
Unit 24 Reddicap Trading Estate
Sutton Coldfield
West Midlands B75 7BU
Tel: +44 (0) 121 3780952

Calmag Ltd.
Unit 4-6, Crown Works
Bradford Road
Sandbeds, Keighley
West Yorkshire BD20 5LN
Tel: +44 (0) 1535 210 320

7 BOILER ASSEMBLY - Exploded View Legend

1. Front Casing Panel
2. Front Casing Door
3. Sump Cover Plate
4. Flue Sensing Nipple
5. Return Pipe
6. Flue Manifold
7. Interpanel
8. Burner
9. Combustion Chamber Insulation
10. Heat Engine
11. Injector & Housing
12. Venturi
13. Fan
14. Automatic Air Vent (Heat Exchanger)
15. Gas Service Cock
16. Gas Valve
17. Gas Injector Pipe
18. Fan Bracket
19. Orifice Plate
20. Control Thermistor (Flow/Return)
21. Overheat Thermostat
22. Ignition Electrode
23. Flame Sensing Electrode
24. Condensate Trap/Siphon
25. User Control PCB
26. PCB Primary Controls
27. Mains Switch
28. Pre-Heat & Winter/Summer Switch
29. Wall Mounting Bracket
30. Turret Gasket
31. Spark Generator
32. Ignition Lead
33. Connection Pipes
34. Flow Regulator
35. Pressure Relief Valve
36. Expansion Vessel
37. Expansion Vessel Pipe
38. Pressure Gauge
39. DHW Thermistor
40. Diverter Valve Head
41. Diverter Valve Cartridge
42. Flow Group Manifold
43. Pump
44. Return Group Manifold
45. Plate Heat Exchanger
46. Dry Fire Thermistor
47. Water Pressure Switch
48. Reed Switch
49. Reed Switch Cartridge & Filter
50. Air Vent (Pump)
51. Filling Loop
52. Return Valve
53. Flow Valve
54. DHW Valve
64. Control Box Sub Assy
65. Control Box Lid
71. Control Box Hinge
78. Turret Clamp
86. Burner Earth Pin
91. Flow Pipe

8 BOILER ASSEMBLY - Exploded View

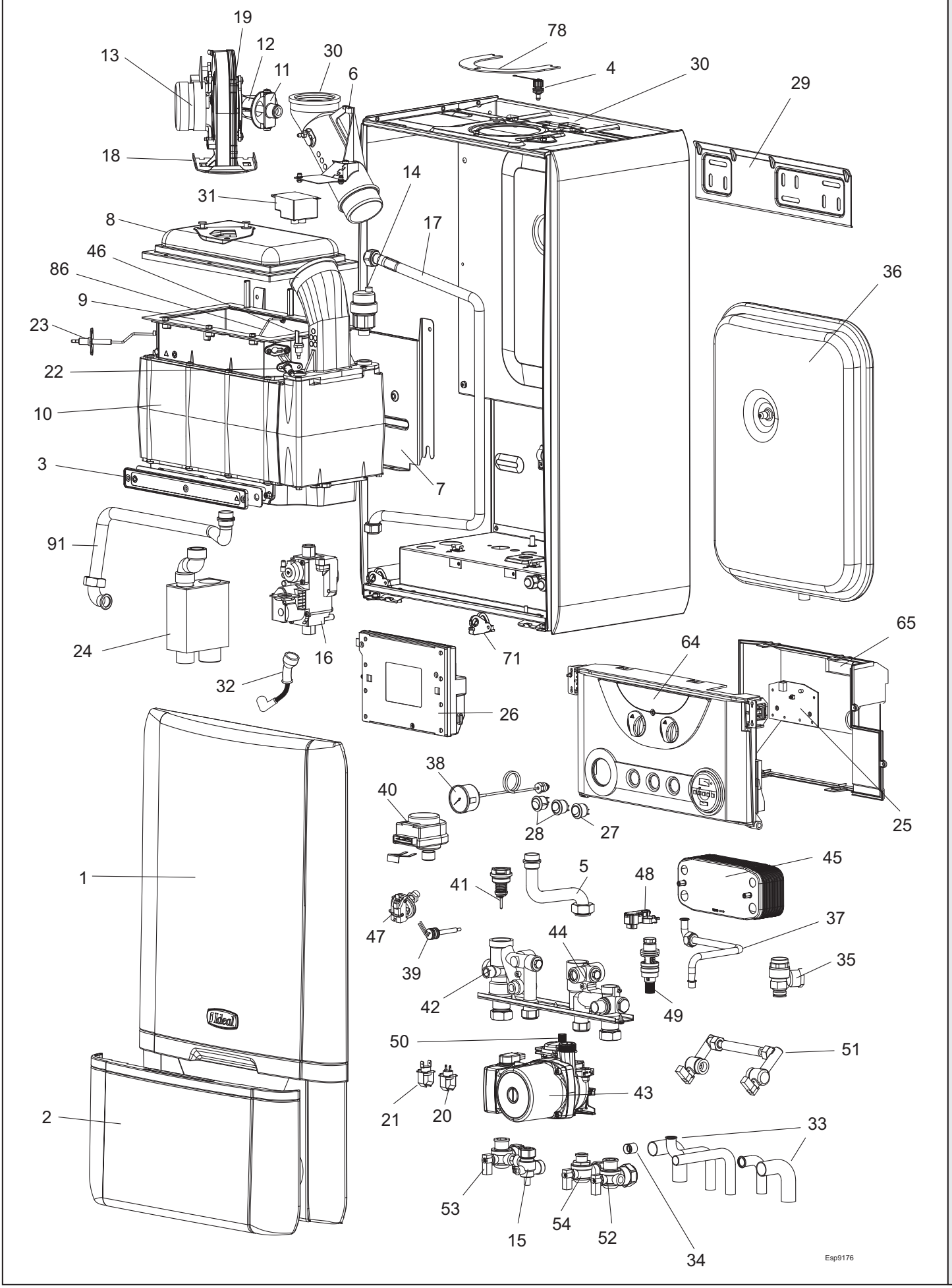

9 UNPACKING

The boiler is supplied fully assembled in one Pack A, together with a telescopic flue assembly for lengths up to 595mm, rear or side flue outlet, in Pack B.

Unpack and check the contents.

Pack A Contents

A Boiler

B Hardware Pack Box (positioned at bottom of boiler)

C Wall Mounting Bracket (positioned at bottom of boiler)

D Installation/Users Instructions

E Wall Mounting Template

F 2 Year Guarantee

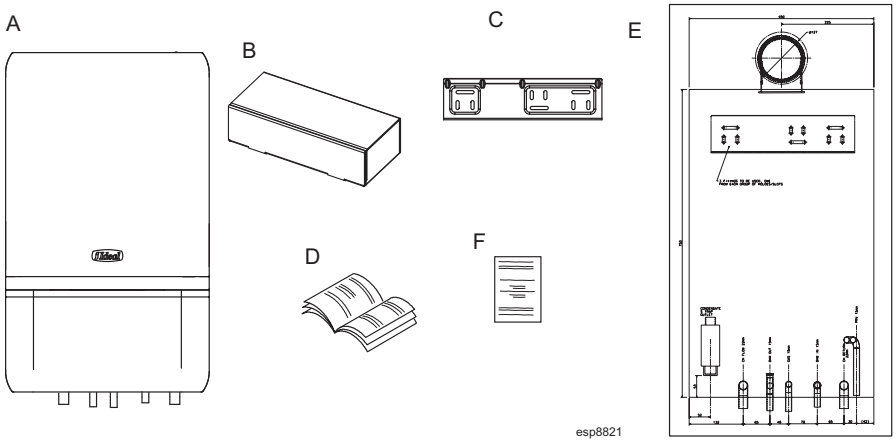

HARDWARE PACK CONTENTS

Accessory Pack
1. Screws x 3
2. Wall Plugs x3
3. 1/2" Fibre washer (spare) x 1
4. 1/2" Gas washer (blue) (spare) x 1
5. 3/4" Fibre washer (spare) x 1

Gas Pack
1. Gas Cock x 1
2. 1/2" Gas washer (blue) x 1
3. Gas Inlet Bend 15mm x 1

Return Valve Pack
1. Return Valve Assembly c/w drain
2. Outlet bend 22mm
3. Fibre Washer

Flow Valve Pack
1. Outlet bend 22mm x 1
2. 22mm CH valve, nut & olive x 1
3. 3/4" Fibre washer x 1

DHW Pack
1. Pipe DHW outlet x 1
2. 15mm valve c/w nut & olive & flow regulator x 1
3. Inlet bend 15mm x 1
4. Nut G1/2 x 2
5. 1/2" Fibre washer x 3

Filling Loop Pack
1. Isolating valve c/w double non return valve x 1
2. Flexible Hose x 1

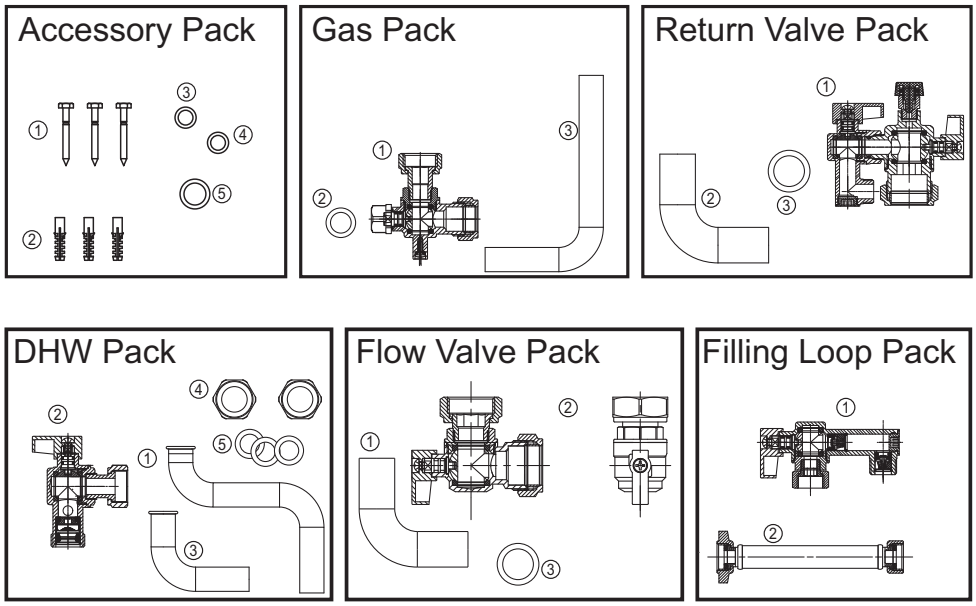

PACK B CONTENTS

A Telescopic flue terminal

B Flue turret

C Screws

D Sealing tape

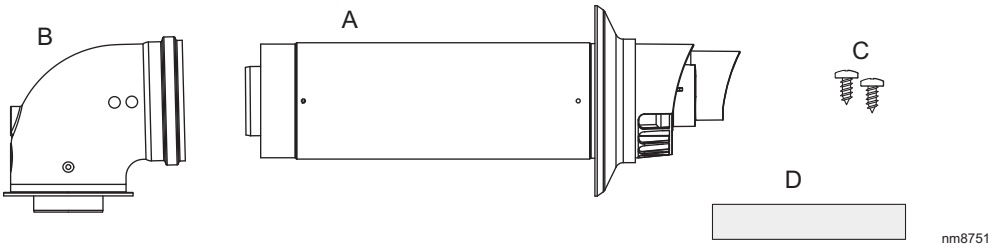

10 DETERMINING THE FLUE LENGTH AND FLUE PACKS REQUIRED

IMPORTANT. The boiler MUST be installed in a vertical position

Dimension X - Wall thickness.

Dimension L - Wall thickness plus boiler spacing.

Dimension S - Optional Stand-off frame depth = 33mm

FLUE KITS

Pack B - supplied as standard

Pack D - optional extension kit for side flue or rear flue outlet.

Finishing Kit - Supplied as an optional extra.

Refer to 'Flue Extension Ducts'

REAR FLUE

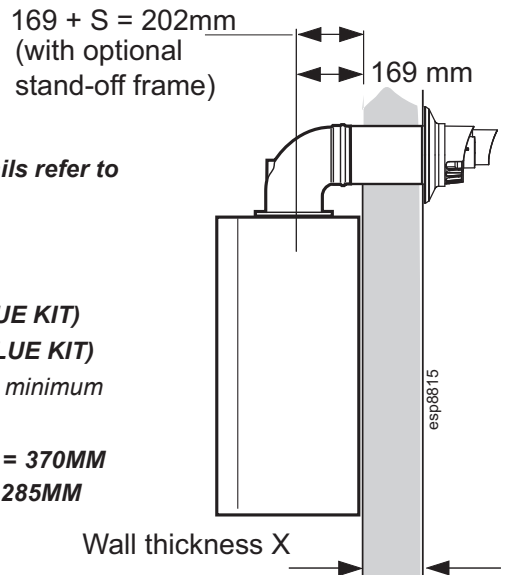

Note. ***MAXIMUM FLUE LENGTHS:***

HE24 & 30 - 6M (HORIZONTAL FLUE)

HE35 - 3M (HORIZONTAL FLUE)

HE24, 30 & 35 - 7.5M (ROOF FLUE)

HE 24, 30 & 35 - 5M PRIMARY AND 17M SECONDARY IS A TYPICAL MAX. FLUE LENGTH. (For alternative details refer to Powered Vertical Instructions)

90° ELBOW KIT 60/100 (EQUIVALENT FLUE LENGTH RESISTANCE = 1M)

45° ELBOW KIT 60/100 (EQUIVALENT FLUE LENGTH RESISTANCE = 0.6M)

HE24, HE30 & HE35 - 18M TOTAL (AIR PLUS FLUE DUCT-60/60 TWIN FLUE KIT)

HE24, HE30 & HE35 - 60M TOTAL (AIR PLUS FLUE DUCT - 80/80 TWIN FLUE KIT)

NOTE. *If the option of a loft terminal grille is used with the 80/80 twin flue, then a minimum of 300mm radial clearance around the grill must be maintained at ALL times.*

MINIMUM HORIZONTAL FLUE LENGTHS - TELESCOPIC TERMINAL = 370MM

(Centre Line of turret to outside of wall terminal) - ONE PIECE TERMINAL = 285MM

Notes.

1. *It is recommended that a support bracket is fitted for every 1 meter of extension pipe used and a bracket should be used at every joint, to ensure pipes are held at the correct angle.*

   If a slip joint coupling is to be used then a bracket should be used to secure the collar.

2. *When extension 'D' packs are used the flue duct MUST be inclined at 1.5 degrees to the horizontal to allow condensate to drain back into the boiler and out through the condensate drain.*

3. *If the telescopic 'B' pack, or horizontal flue terminal (600 long) only are used, they may be mounted horizontally. The 1.5 degrees is taken care of by the inclination of the flue within the air pipe.*

4. *If the boiler is to be installed with upward piping routed behind the boiler then the optional stand-off kit should be used. Care must be taken when cutting the ducts and marking the wall to suit this condition.*

5. *Only use water as a lubricant during assembly. Do not use mineral based oils.*

SIDE FLUE

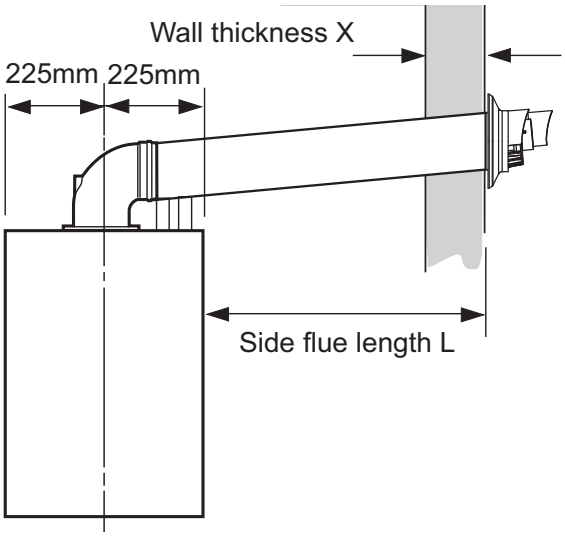

Total Flue length dimension (measuring from CL of turret to outside wall)		Flue	
Rear flue dim. X+169	Side flue dim. L+225	Extra packs required	Boiler Size
Up to 595 mm	Up to 595 mm	none	HE24,30 & 35
Up to 1545 mm	Up to 1545 mm	Pack D - 1 off	HE24,30 & 35
Up to 2495 mm	Up to 2495 mm	Pack D - 2 off	HE24,30 & 35
Up to 3445 mm	Up to 3445 mm	Pack D - 3 off	HE24, 30 & 35*
Up to 4395 mm	Up to 4395 mm	Pack D - 4 off	HE24 & 30
Up to 5345 mm	Up to 5345 mm	Pack D - 5 off	HE24 & 30
Up to 6000 mm	Up to 6000 mm	Pack D - 6 off	HE24 & 30

**Esprit HE35 is capable of 3m flue only*

11 FLUE ASSEMBLY - Exploded View

An optional flue duct extension kit is required for wall thicknesses greater than :

Side 365mm (14 3/8")

Rear 426mm (15 3/4").

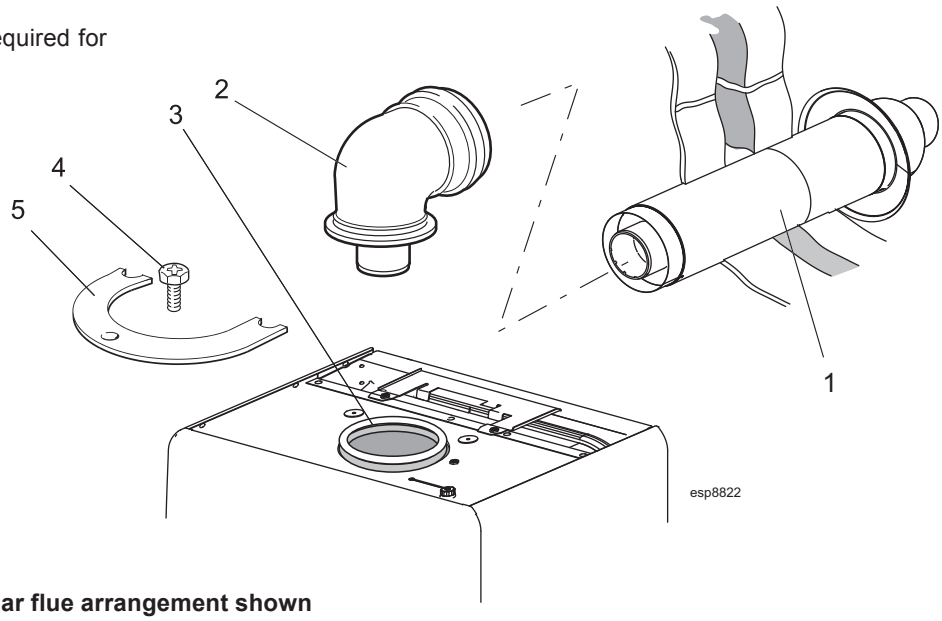

LEGEND

1. Duct assembly.
2. Flue turret.
3. Turret gasket.
4. M5 x 10 pozi screw.
5. Turret clamp.

Rear flue arrangement shown

12 WALL MOUNTING TEMPLATE

Note.
The template shows the positions of the fixing holes and the rear flue outlet hole centre for standard installation. Care MUST be taken to ensure the correct holes are drilled.

1. Tape template into the selected position. Ensure squareness by hanging a plumbline as shown.
2. If fitting a side flue extend the flue centre line onto the side wall and measure in 169mm for standard installation.

   Note. *If using stand-off kit distance increases to 206mm.*

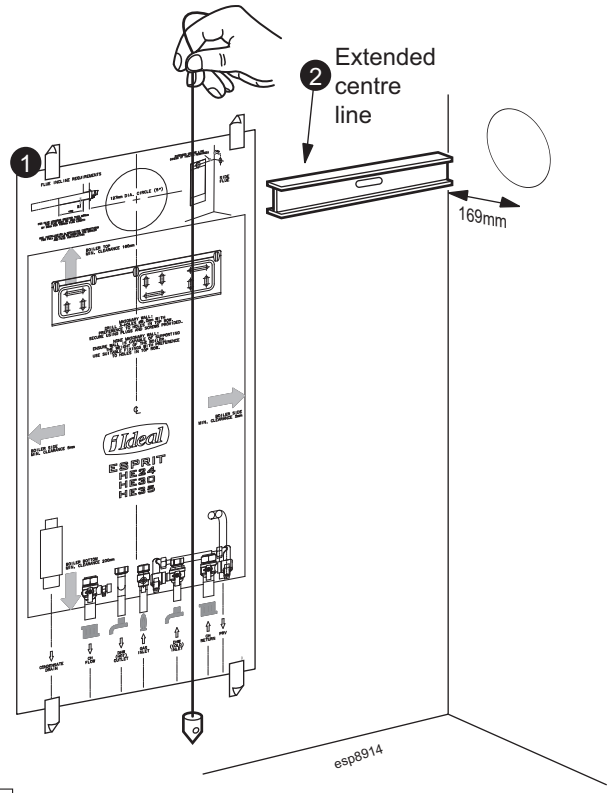

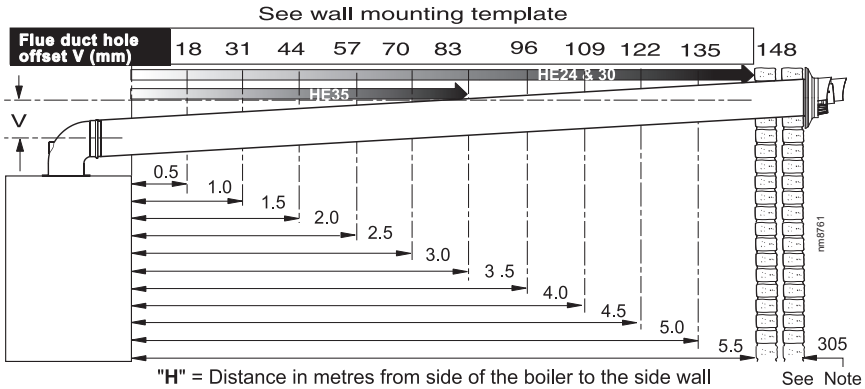

"**H**" = Distance in metres from side of the boiler to the side wall

Note. *If wall thickness is greater than 305mm then dimension "**H**" must be reduced by the same amount and the offset may be adjusted accordingly.*

3. Mark onto the wall the following:
   - **a** The wall mounting plate screw positions (choose one from each group).
   - **b.** The position of the flue duct hole (see diagram).

   Note. *Mark the centre of the hole as well as the circumference*
4. Remove the template from the wall.

13 PREPARING THE WALL

IMPORTANT.

Ensure that, during the cutting operation, masonry falling outside of the building does not cause damage or personal injury.

1. Cut the flue hole (preferably with a 5" core boring tool), ensuring that the hole is square to the wall. Both wall faces immediately around the cut hole should be flat.
2. Drill 3 holes with an 8mm masonry drill and insert the plastic plugs, provided, for the wall mounting plate.

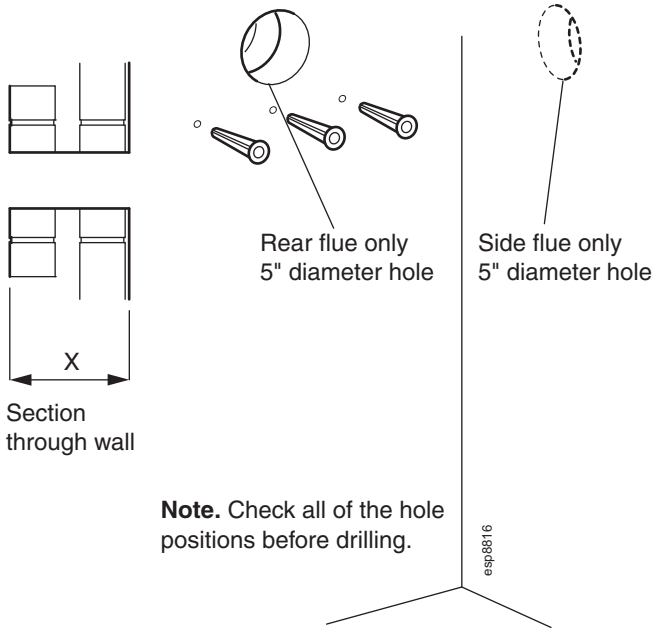

Note. Check all of the hole positions before drilling.

14 SETTING THE FLUE - REAR **Wall thicknesses of 200 to 426mm**

Notes.

a. *If using the extension ducts go to Frame 16.*

b. *If the stand-off frame is used it is essential add 33mm to 'X' the measured wall thickness when marking the flue (this will allow for the fitted frame).*

c. *For wall thickness less than 200mm use none telescopic b pack.*

1. Measure and note wall thickness X. Refer to Frame 10.
2. Add 85mm (4") to dimension X and set telescopic flue length as indicated in drawing.
3. Using a 3.5mm drill bit, drill two holes in outer air duct taking care not to pierce plastic inner flue.
4. Fix to length using self tappers provided.
5. Seal out air duct using the tape provided.

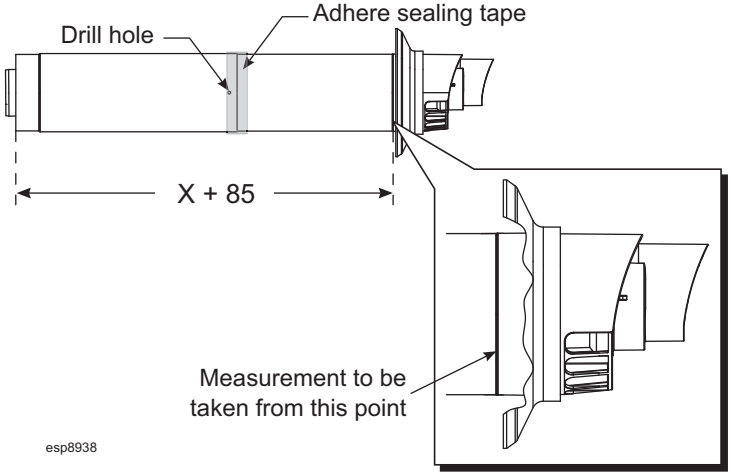

15 SETTING THE FLUE - SIDE **Wall thicknesses of 140 to 365mm**

Note.

a. If using the extension ducts go to Frame 16.

b. *For shorter flue requirements use non telescopic b pack.*

1. Measure and note wall thickness X. Refer to Frame 10.
2. Measure distance from side of boiler to inside of wall and add to wall thickness X = L. Refer to Frame 10.
3. Add 156mm to dimension L, hand set telescopic flue length as indicated in drawing.
4. Using a 3.5mm drill bit, drill two holes in outer air duct taking care not to pierce plastic inner flue.
5. Fix to length using self tappers provided.
6. Seal outer air duct using the tape provided.

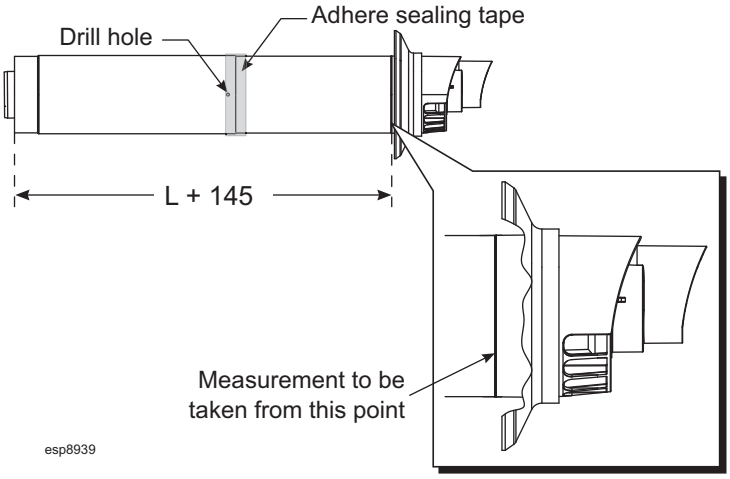

16 FLUE EXTENSION DUCTS - For total flue lengths greater than 595mm

Pack D Flue extension duct kit contents

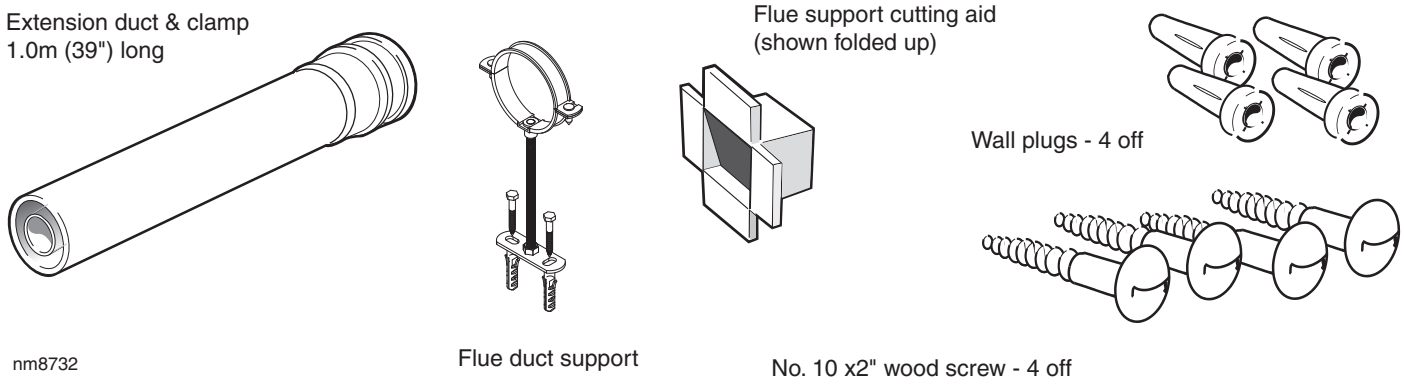

17 FLUE EXTENSION DUCTS - continued

Use a maximum of 6m extended flue ONLY (HE24 & 30)

Use a maximum of 3m extended flue ONLY (HE35)

General arrangement

1. A ***maximum*** of 6 extension ducts for the HE24/ HE30 and a maximum of 3 extension ducts for the HE35 (one suitably cut) plus the standard flue duct may be used together.
2. Flue extensions of greater length than 1m (39") should be supported with the bracket provided, suitably adjusted. Refer to Frames 16 and 24.
3. Only use water as a lubricant during assembly. Do not use mineral based oils.

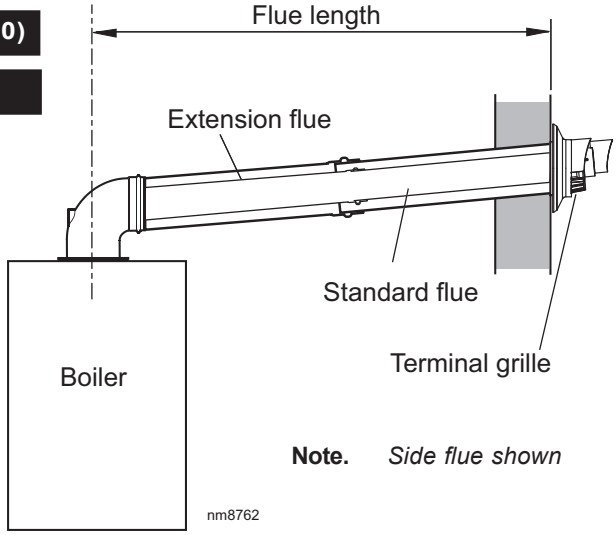

18 FITTING THE KIT

Because of the flexibility of the telescopic flue terminal it is not always necessary to cut an extension pack.

1. Measure the total flue length from the centre of the boiler outlet to the outside wall.
2. Subtract 70mm from this dimension.
3. Subtract 950mm for each 'D' pack to be used.
4. If the remainder Y is 300mm - 525mm this can be taken up by the adjustment in the telescopic flue.
5. If the remainder Y is 525mm - 950mm it will be necessary to cut a 'D' pack to 400mm.
6. If the remainder Y is less than 300mm, shorten the previous 'D' pack to 400mm and adjust the telescopic terminal.
7. Measure and mark the length on the flue, to ensure a square cut mark the flue all the way around and cut to length.

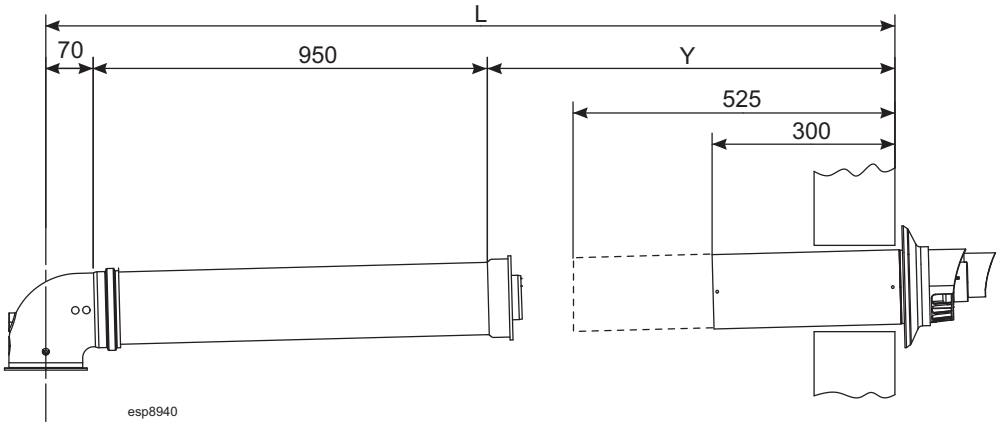

19 FITTING THE WALL MOUNTING PLATE

Screw the wall mounting plate to the wall using 3 wall plugs (previously fitted) with the 3 screws provided.

Choose one of the 3 sets of slots in left, right and centre bank. Ensuring that at least one of the screws is fitted into a top slot.

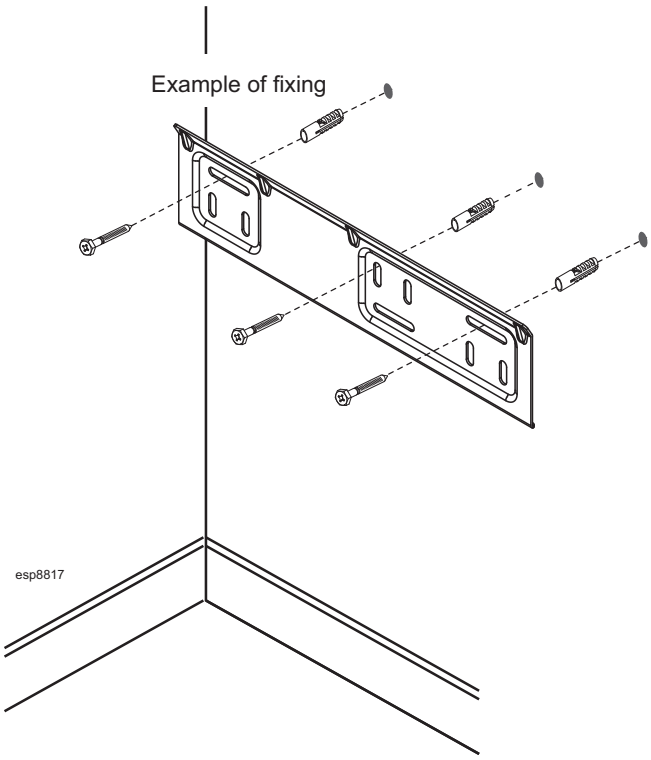

20 MOUNTING THE BOILER

1. Ensure the plastic plugs are removed from both the CH and DHW connections before mounting the boiler.
2. Lift the boiler onto the wall mounting plate (refer to the Introduction section for safe handling advice), locating it over the top angled return.

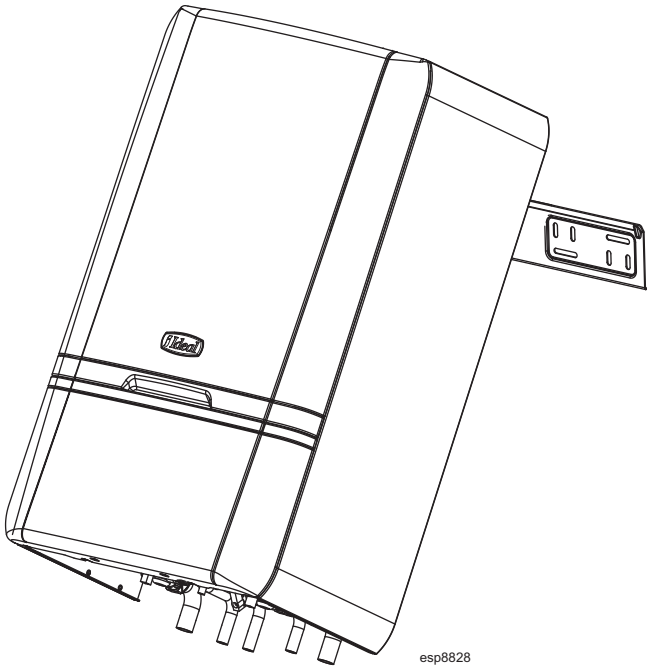

21 CONDENSATE DRAIN

Refer also to the British Gas document: 'Guidance Notes for the Installation of Domestic Gas Condensing Boilers' (1989).

Ensure that the siphon is full of water before commissioning the boiler . Refer to Frame 24.

The routing of the drain must be made to allow a minimum fall of 1 in 20 away from the boiler, throughout its length.

The drainage pipework must be arranged so that obstruction (e.g. through freezing) of external drainage pipe does not give rise to spillage within the dwelling.

IMPORTANT.

All pipework and fittings in the condensate drain system must be made of plastic. No other materials may be used. The maximum length of external plastic pipework is 3m and must be insulated.

The drain outlet on the boiler is standard 21.5mm overflow pipe and is suitable for either push fit or solvent weld applications. This size must not be reduced in any part of its length.

The boiler includes as standard, a 75mm condensate trap. The condensate trap also includes a siphon to reduce the possibility of freezing in the drain outlet.

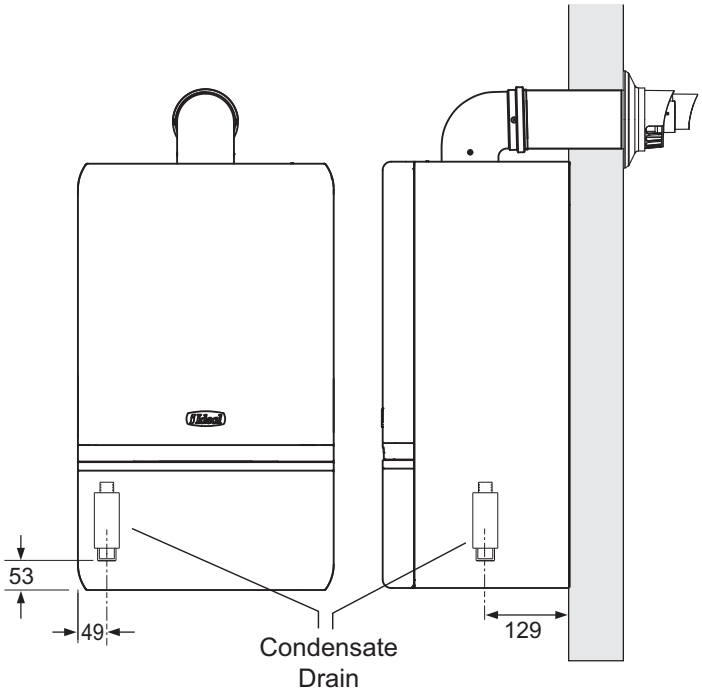

22 CONDENSATE PIPE TERMINATION CONFIGURATIONS

Note. ALL EXTERNAL PIPE RUNS MUST BE INSULATED
MAXIMUM EXTERNAL PIPE LENGTH IS 3 METRES

1. INTERNAL TO SINK WASTE UPSTREAM OF SINK WASTE TRAP

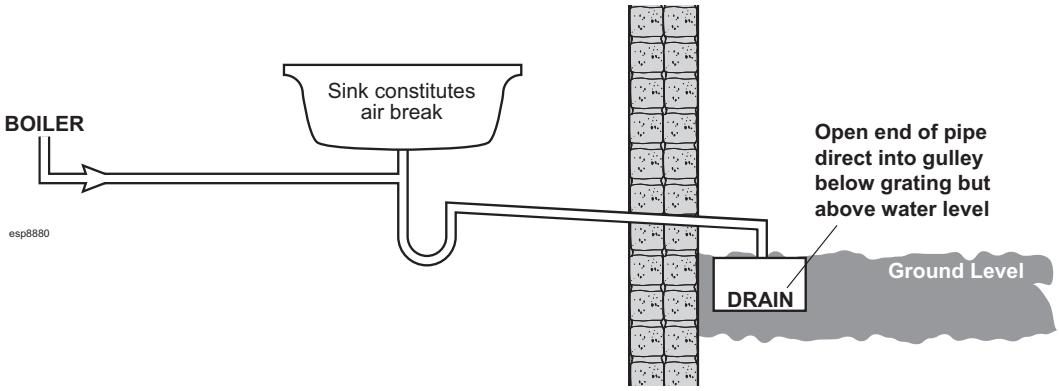

2. INTERNAL TO SINK WASTE DOWNSTREAM OF SINK WASTE TRAP (PREFERRED METHOD)

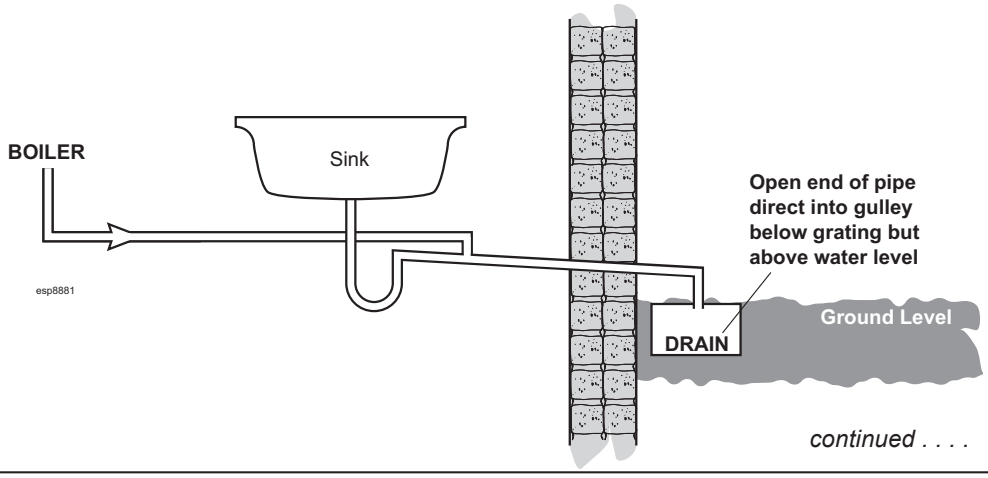

continued . . . .

23 CONDENSATE PIPE TERMINATION CONFIGURATIONS . . . *continued*

3. INTERNAL CONNECTION TO SOIL AND VENT STACK

* Make connection to SVP using a solvent welded saddle

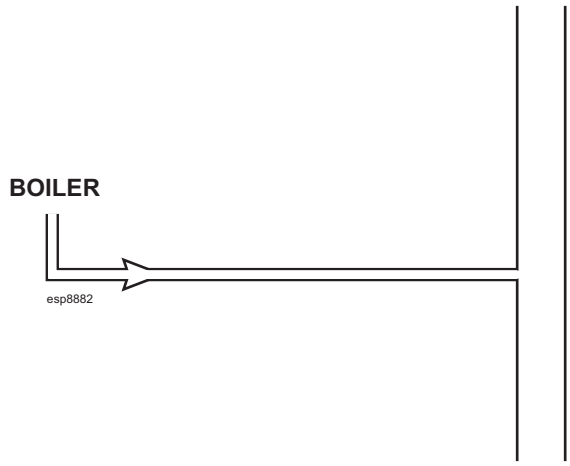

4. TERMINATION TO SOAK AWAY

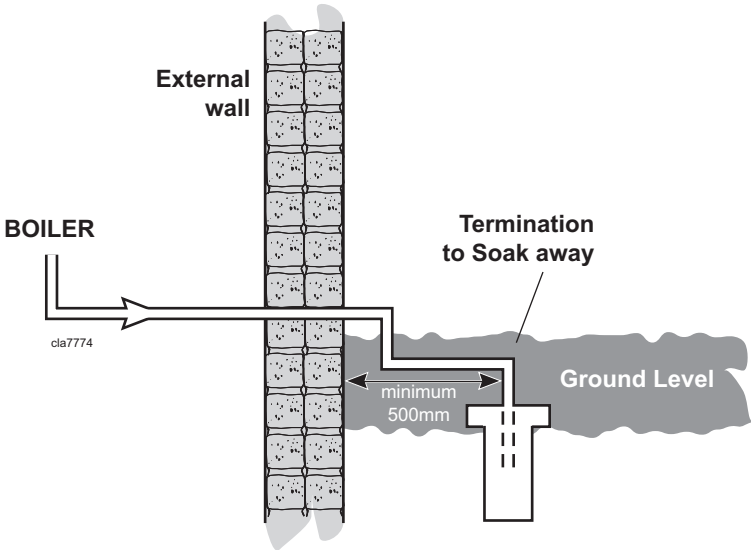

5. TERMINATION TO DRAIN / GULLEY

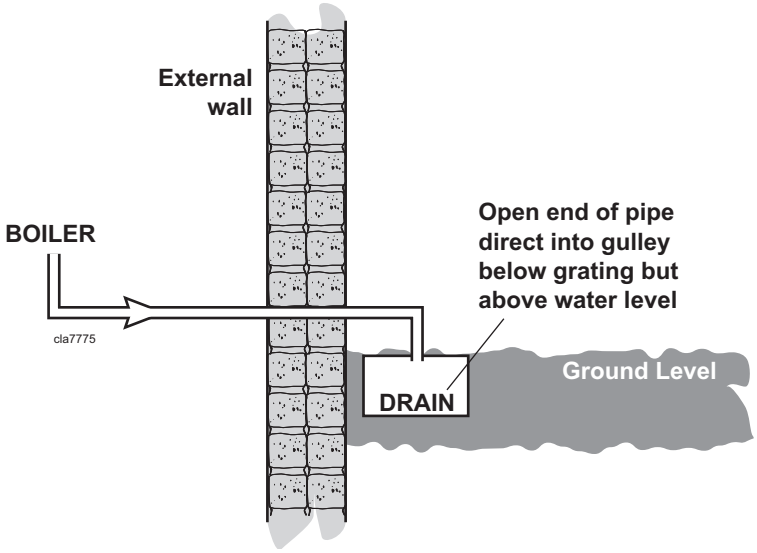

24 CONNECTING THE FLUE TO THE BOILER

Note. *Before fitting the flue turret fill the condensate trap within the boiler by pouring a cupful of water into the flue outlet A. Take care to ensure that the water is only poured into the flue outlet, and does not spill into the boiler casing.*

1. Locate the flue into the turret.
2. Insert the flue assembly through the prepared hole in the wall. Push through and pull back to seal against outside wall face.
3. Locate the flue turret on the top of the boiler, ensuring that the turret gasket is in place. Also ensure the turret is located concentric with the flue aperture on the boiler top panel. Check that the flue seal located in the top of the flue manifold is secure and giving an effective seal.
4. Secure the flue turret on top of the boiler by inserting the open ends of the turret clamp under the 2 studs and fixing it in the middle with the single M5 x 10mm pozi-hex screw provided.
5. **Flues over 1 metre long.**

   Fix the flue support bracket to the wall, using the 4 wall plugs and wood screws.

   NB. The space bracket will utilise one fixing hole only whilst used in conjunction with the stand-off option.

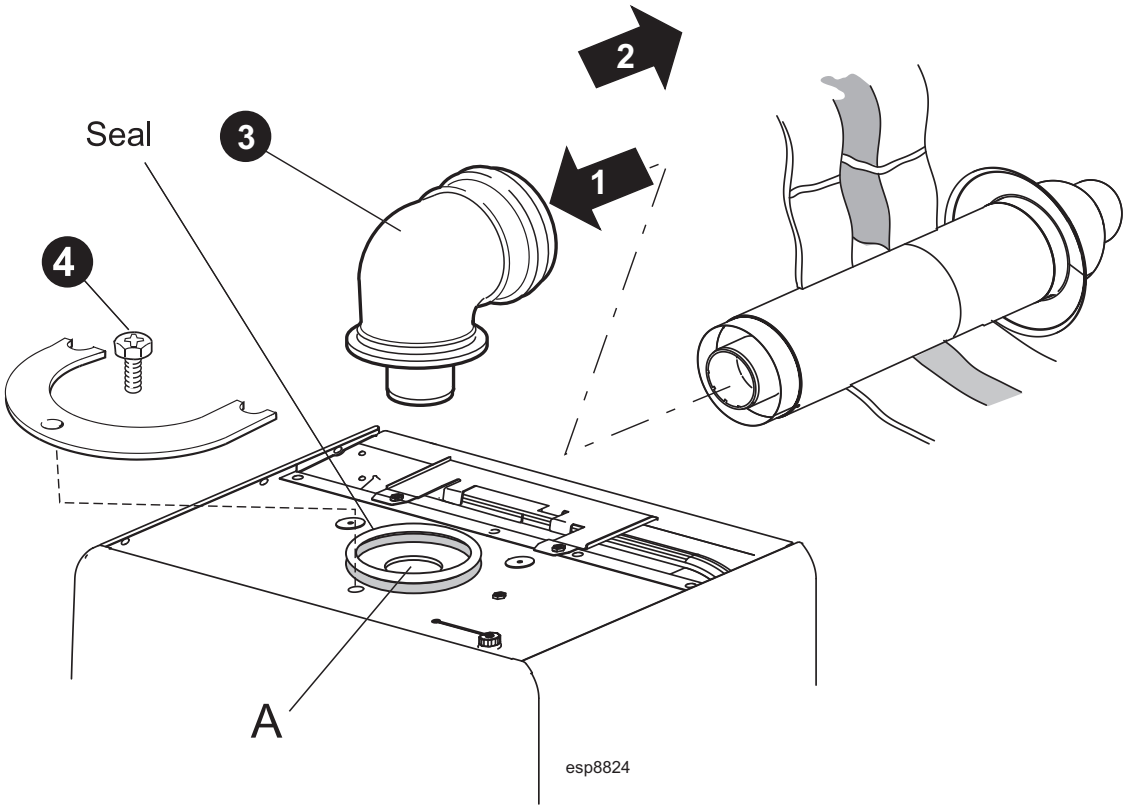

25 FITTING THE OPTIONAL ROOF FLUE KIT (Flat or Pitched)

Note.
A flat or pitched roof flashing plate (not supplied) is required before proceeding with the installation of this kit.

This kit is suitable for both flat and pitched roof terminations, using a concentric flue to run vertically from the top of the boiler and terminating above roof level.

WEATHER PROOFING

Where the flue passes through the roof line an adequate seal must be made. This is achieved by using either:

- Flat roof weather collar

or

- Universal weather collar.

ACCESSORIES

Flue Duct Extension Kits are available for flue lengths extending beyond 1m. These packs contain 1m extension ducts and may be cut to the desired length.

If the offset vertical option is used an elbow Kit is required. For a full accessories list refer to page 6, Optional Extras and Frames 26 and 28, Flue Arrangement.

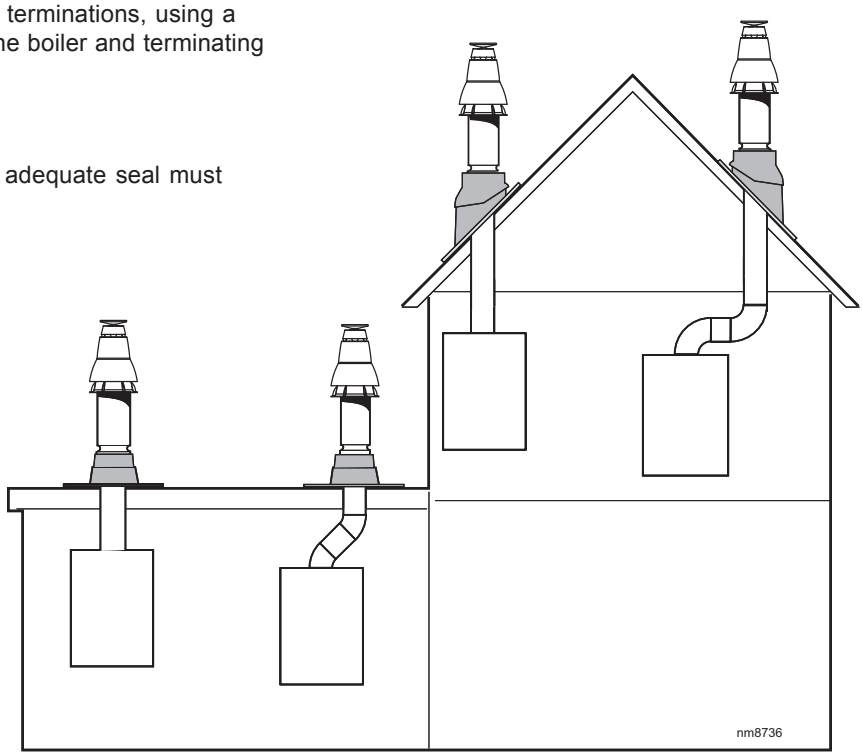

26 ROOF FLUE KIT CONTENTS / OPTIONS

Flue Terminal
UIN 203132

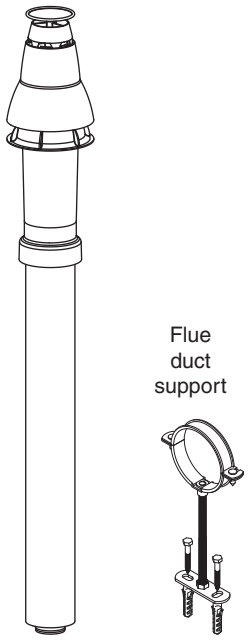

Flue Seal Collar - Flat Roof
UIN 152259

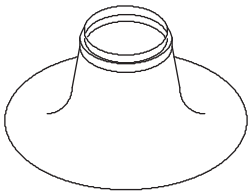

Flue Seal Collar - Tile Roof
UIN 152258

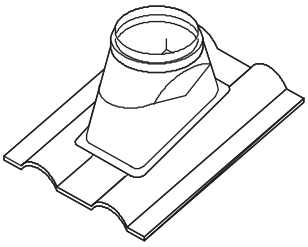

Vertical connector
UIN 204180

90° elbow
UIN 203130

45° elbow
UIN 203131

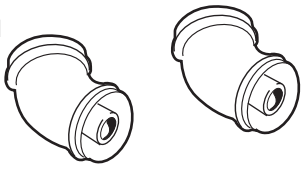

Roof Flue Extension Duct
UIN 203129

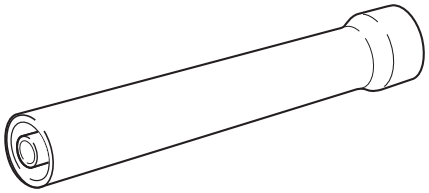

esp9177

FLUE OUTLET

27 FLUE TERMINAL POSITION

The terminal should be positioned so that products of combustion can safely disperse at all times.

Pluming may occur at the termination so, where possible, terminal positions where this could cause a nuisance should be avoided.

Minimum dimensions are shown below

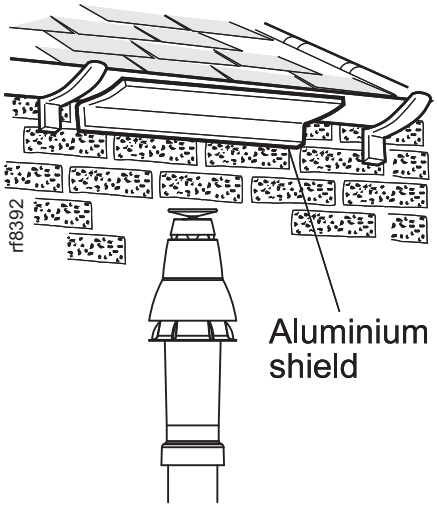

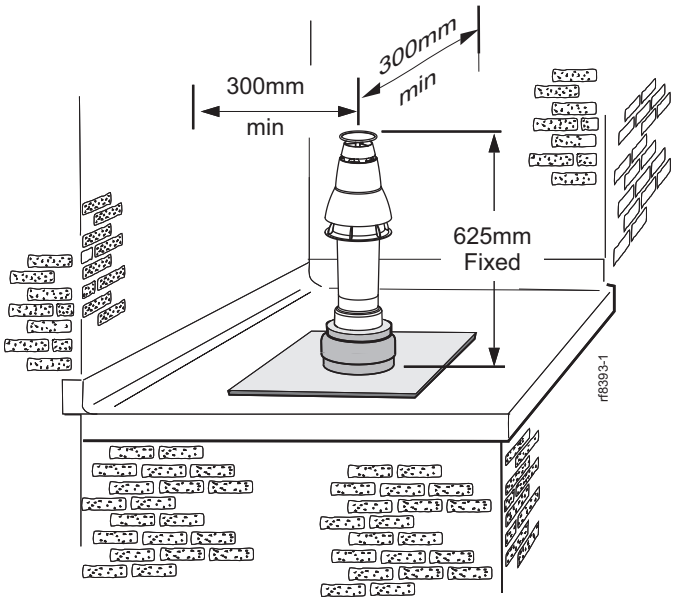

Flat roof - with structure

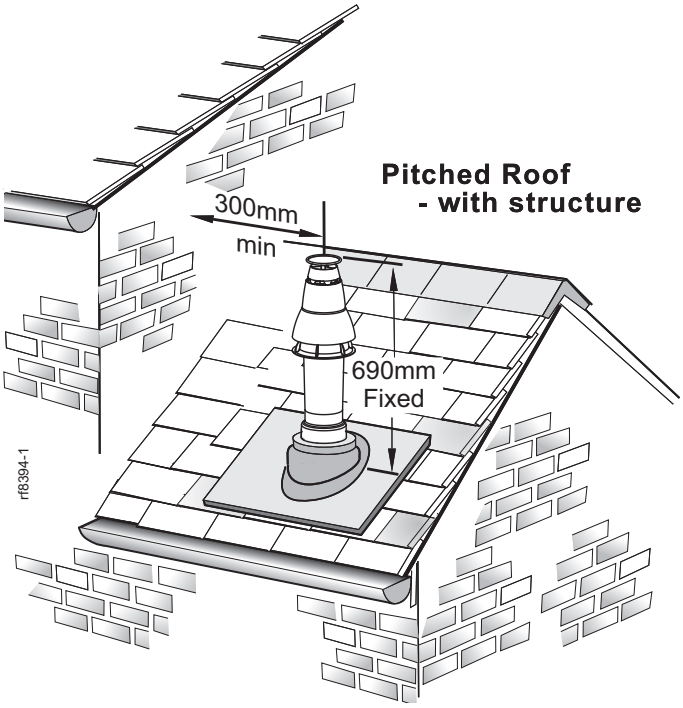

Terminal Position	Minimum Dimension
Directly below an opening, air brick, windows, etc.	300 mm
Below plastic / painted gutters	300 mm
Painted surface	300 mm
Below eaves or balcony	500 mm

28 FLUE ARRANGEMENT

Note.

The equivalent flue length resistance of the elbow kits are:

90° elbow kit = 1m

45° elbow kit = 0.6m

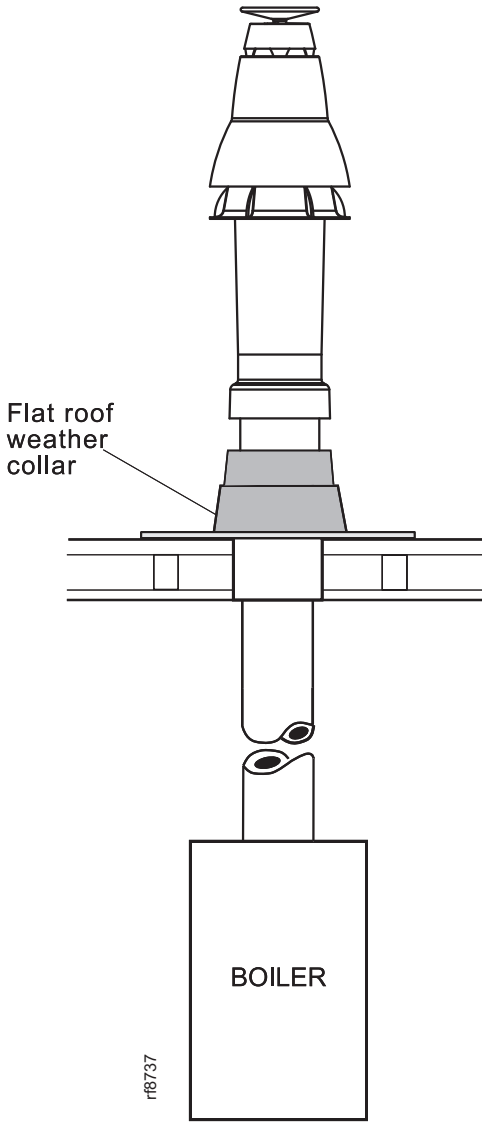

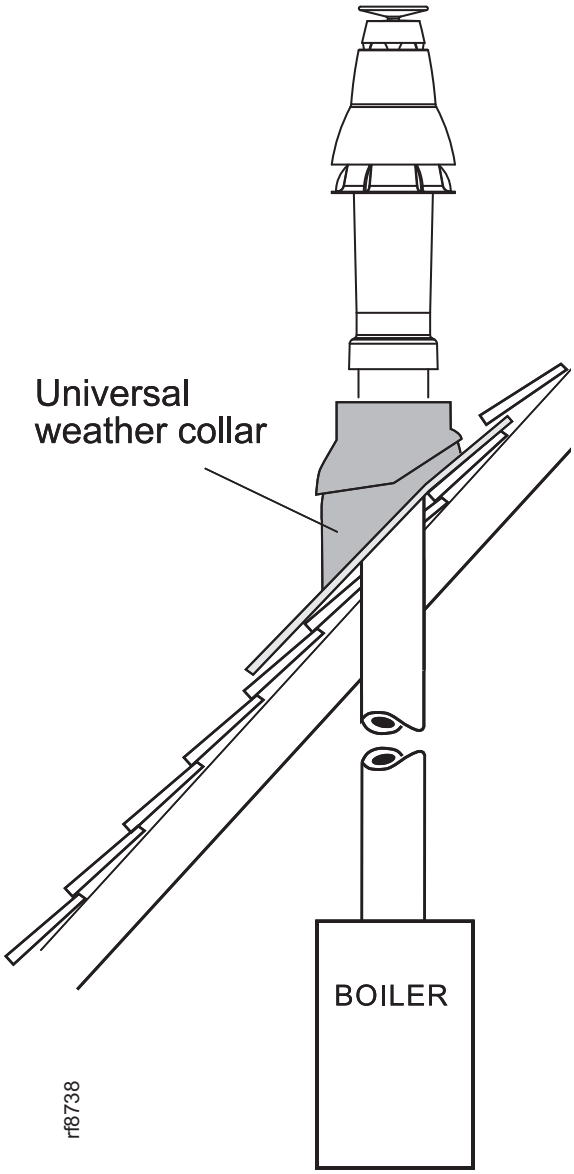

FLUE OUTLET

29 ASSEMBLING THE ROOF FLUE KIT

Determine the correct height that the flue should terminate above the roof. If after calculating or measuring the overall flue height from the top of the boiler, it is necessary to cut both pipes, then ensure they are cut equally leaving the inner flue tube longer than the outer air tube as supplied.

Ensure the cut pipe ends are free from any burrs.

1. Position the roof flashing plate (supplied separately) over the hole cut in the roof and insert flue terminal from the roof end.

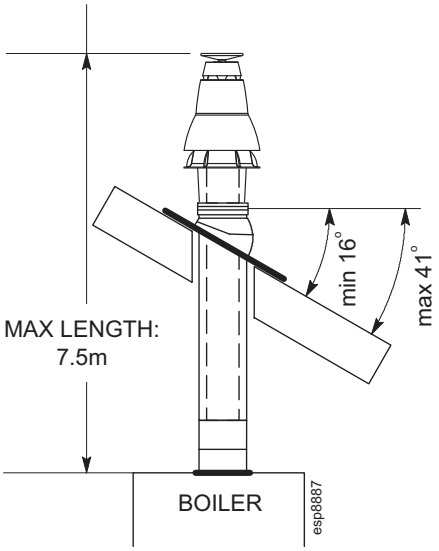

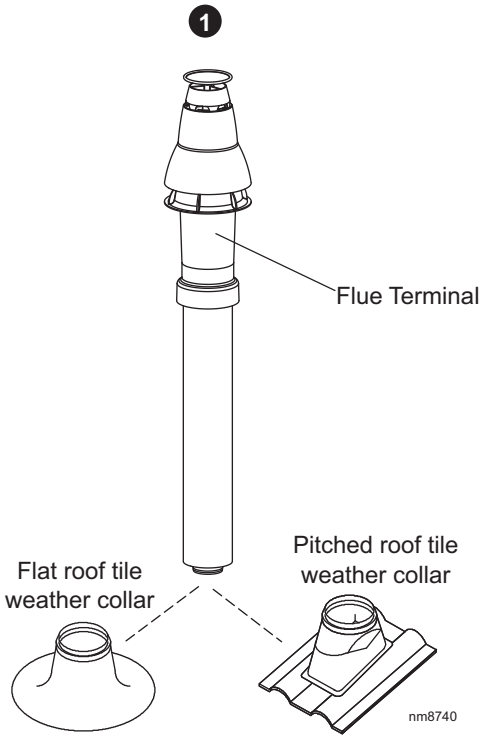

2. Push fit the vertical connector (supplied separately) into the boiler flue connection and retain with the turret clamp and securing screw (supplied with the boiler). **ENSURING THE GASKETS IN THE BOILER FLUE OUTLET ARE CORRECTLY FITTED.**

3. "Push" fit extension duct (if required (supplied separately)) into vertical connector.

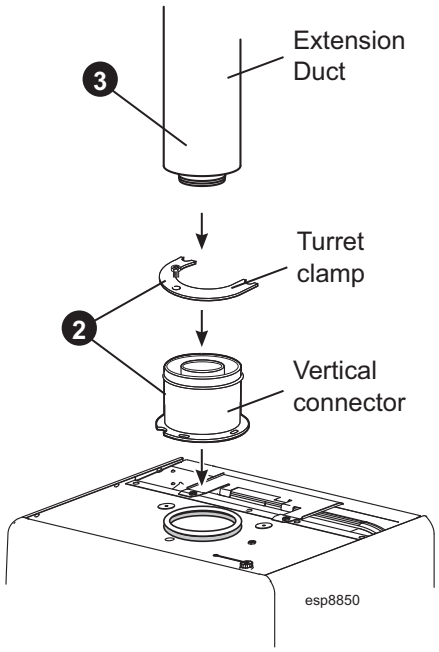

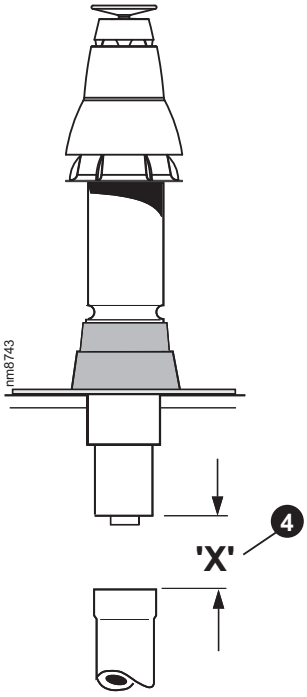

4. If the last extension duct requires cutting, measure 'X', the distance (outer ducts), between the duct and the terminal and add 100 mm to this dimension. This gives the length of the last extension duct.

   Note. *Check the position of the inner flue duct relative to the outer duct on the assembled extension duct(s) and ensure the terminal flue duct is cut longer than the air duct to ensure engagement in the final flue duct seal.*

5. Finally ensure the roof flashing plate is correctly sealed to the roof.

30 PRESSURE RELIEF VALVE (PRV) OUTLET - (SAFETY VALVE DRAIN)

The PRV outlet is located at the rear RHS of the boiler service connection area.

Connection of additional pipewok to the PRV outlet should be made prior to connection of CH, DHW and gas connections for ease of access.

The discharge pipe should be positioned so that the discharge of water or steam cannot create a hazard to the occupants of the premises or damage the electrical components and wiring.

31 WATER AND GAS CONNECTIONS

Included in the hardware pack provided with the boiler are all the necessary isolation valves, seals and pipework to connect the CH, DHW and gas connections (refer to Frame 9). Components are also provided for an integral filling loop. Each connection is individually bagged with the correct seals and pipework, and should only be opened when required.

1. Pre-assemble the filling loop between the CH return and DHW inlet isolation valves as shown in the photo.
2. Attach this assembly to the bottom of the boiler using the sealing washers provided. The copper tail pipes may now be connected to the valve outlets.
3. Connect the gas service cock using the washer provided. The copper tail pipe may now be fitted.
4. Connect the DHW outlet connection
5. Connect the CH flow isolation valve using the washer provided. The copper tail pipe may now be fitted.

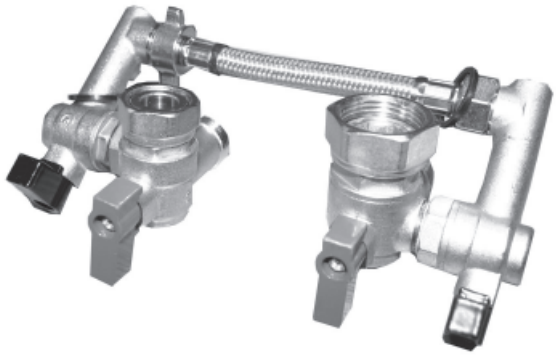

WATER CONNECTIONS - CH

Notes.

For heating loads in excess of 60,000 Btu/h use 28mm x 22mm connectors to connect the boiler flow and return pipes to 28mm system pipework.

Do not subject any of the isolating valves to heat as the seals may be damaged.

WATER CONNECTIONS - DHW

Note. *The DHW inlet isolating valve incorporates a flow regulator and a CH filling loop connection.*

GAS CONNECTION

IMPORTANT. The gas service cock is sealed with a non-metallic blue fibre washer so must not be overheated when making capillary connections.

Refer to Frame 2 for details of the position of the gas connection.

N.B. The principle of the 1:1 gas valve ensures that the **Esprit HE** range is able to deliver its full output at inlet pressures down to 14mb. However if dynamic pressures below 20mb are experienced ensure this is adequate for **ALL** other gas appliances in the property.

A boiler gas supply pipe length of 20m and not less than 15mm O.D. can be connected to the boiler via the gas service cock union.

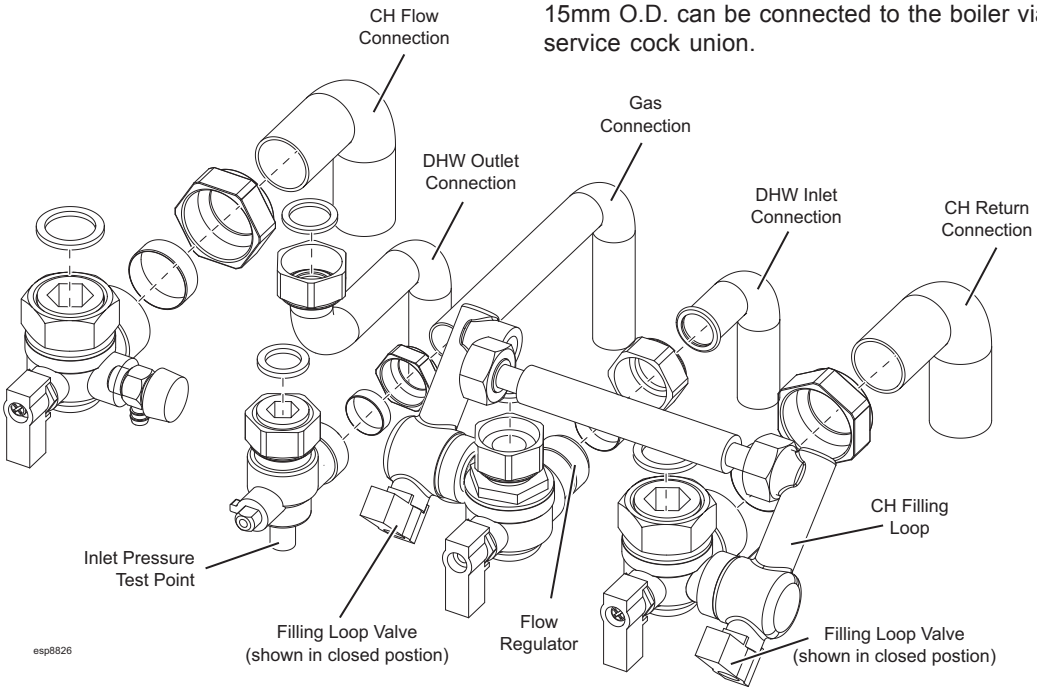

32 FILLING

Central Heating

1. Remove the front panel. Refer to Frame 45.
2. Ensure that the CH isolating valves are open.
3. Fill and vent the system using the filling loop, fitted between the DHW inlet valve and the CH return valve. Refer to Frame 31 and Frame 4 for setting pressure.

   Check for water soundness.

IMPORTANT - when filling:

A. Ensure dust cap on auto air vent is opened up one full turn.

B. When filling, there may be a slight water leak from the air vent therefore electrical connections should be protected.

Domestic Hot Water

1. Fully open all DHW taps and ensure that water flows freely from them.
2. Close all taps.

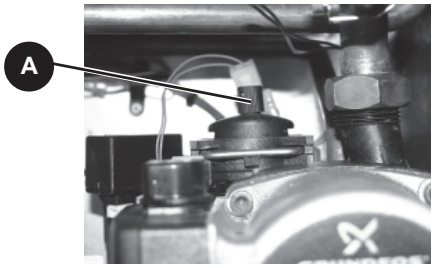

Note. *The domestic hot water flow rate is automatically regulated to a maximum:*

HE24 =	*9.6*	*l/m*	*(2.1 gpm)*
HE30 =	*12.0*	*l/m*	*(2.6 gpm)*
HE35 =	*14.4*	*l/m*	*(3.2 gpm)*

33 ELECTRICAL CONNECTIONS

WARNING. This appliance MUST be earthed.

A mains supply of 230 V ~ 50 Hz is required.

The fuse rating should be 3A. All external controls and wiring must be suitable for mains voltage.

Wiring external to the boiler MUST be in accordance with the current I.E.E. (BS.7671) Wiring Regulations and any local regulations.

For IE reference should be made to the current ETCI rules for electrical installations.

Wiring should be 3 core PVC insulated cable, not less than 0.75 mm^2 (24 x 0.2mm) and no greater than 1.25mm^2, and to BS 6500 Table 16.

Connection must be made in a way that allows complete isolation of the electrical supply such as a double pole switch having a 3mm (1/8") contact separation in both poles, or an unswitched plug and socket, serving only the boiler and system controls. The means of isolation must be accessible to the user after installation.

34 ELECTRICAL CONNECTIONS - INSTALLER WIRING

The Esprit boiler comes pre-fitted with 1m of mains cable. This must be connected to a permanent live supply and NOT switched by thermostats/programmers. For installers wishing to change this cable refer to Frame 35.

The Esprit boiler comes pre-fitted with a link wire between R1 and R2 on the terminal strip. This creates a permanent call for heat and must be removed when adding a room thermostat/programmer.

To add thermostat/programmer:

1. Isolate the mains supply to the boiler.
2. Remove the front panel. Refer to Frame 45.
3. Swing the control box down into the servicing position. Refer to Frame 46.
4. Remove the terminal block cover to access the terminals for electrical connections.

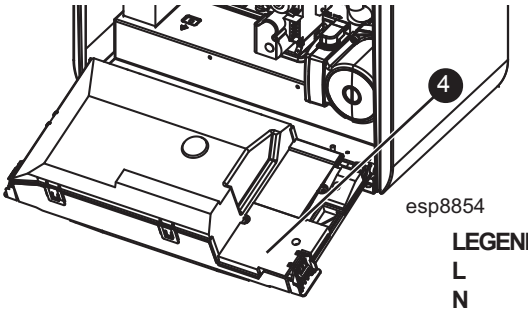

5. Route incoming cables through cable glands provided, after removing air sealing plugs.

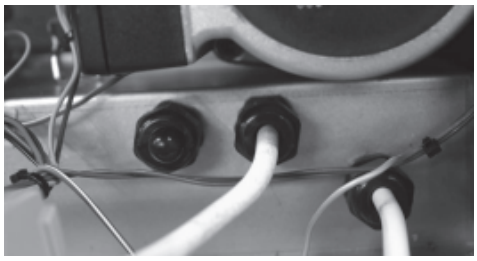

6. Connect wires to terminal block, see instructions opposite.
7. Re-fit terminal block cover, nibbling out the plastic as required from the cable entry to secure the cables.
8. Tighten cable gland to provide cable anchorage.
9. Swing the control box back up into the operating condition and re-fit the front panel ensuring a good seal is made.

LEGEND

L	Live
N	Neutral
F1	Frost Thermostat Switched Live
F2	Frost Thermostat Live Feed
R1	Room Thermostat Switched Live
R2	Room Thermostat Live Feed
R3	Room Thermostat Switched Live

(When using optional internal programmer kits)

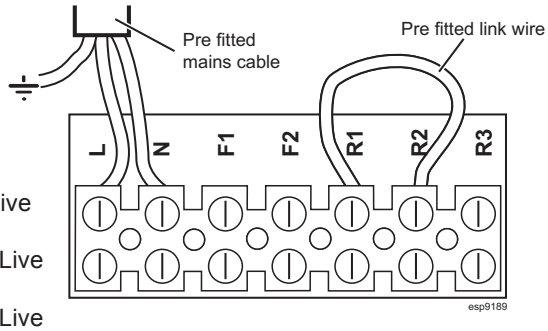

34 CONT'D .....ELECTRICAL CONNECTIONS - INSTALLER WIRING

Ideal Boilers offer 4 kits as follows:
(see individual kits for installation instructions)

PROGRAMMER KIT MECHANICAL 24 HOUR- 24 hour mechanical programmer fits into the control box of the boiler. This can be fitted in conjunction with a room thermostat.

PROGRAMMER KIT ELECTRONIC 7 DAY - 7 day electronic programmer fits into the control box of the boiler. This can be fitted in conjunction with a room thermostat.

RF THERMOSTAT/PROGRAMMER KIT MECHANICAL 24 HOUR - Combined 24 hour mechanical programmer and room thermostat with wireless communication to receiver unit which fits into control box of the boiler.

RF THERMOSTAT/PROGRAMMER KIT ELECTRONIC 7 DAY - Combined 7 day programmer and room thermostat with wireless communication to receiver unit which fits into control box of the boiler.

ROOM THERMOSTAT (NO PROGRAMMER)

1. Remove link wire between R1 and R2.
2. Connect room thermostat across terminals R1 and R2 as shown in diagram A
3. If room thermostat has a neutral connection, connect this to terminal N (load) in the fused spur.

ROOM THERMOSTAT + PROGRAMMER

1. Remove link wire between R1 & R2.
2. Connect room thermostat and programmer in series as shown in diagram B.
3. If room thermostat has a neutral connection, connect this to terminal N (load) in the fused spur.

FROST THERMOSTAT

If parts of the system are vulnerable to freezing or the programmer is likely to be left off during cold weather, a frost thermostat should be fitted.

1. Position the frost thermostat in a suitable position, i.e. area vulnerable to freezing.
2. Connect frost thermostat across terminals F1 and F2 as shown in diagrams A and B.

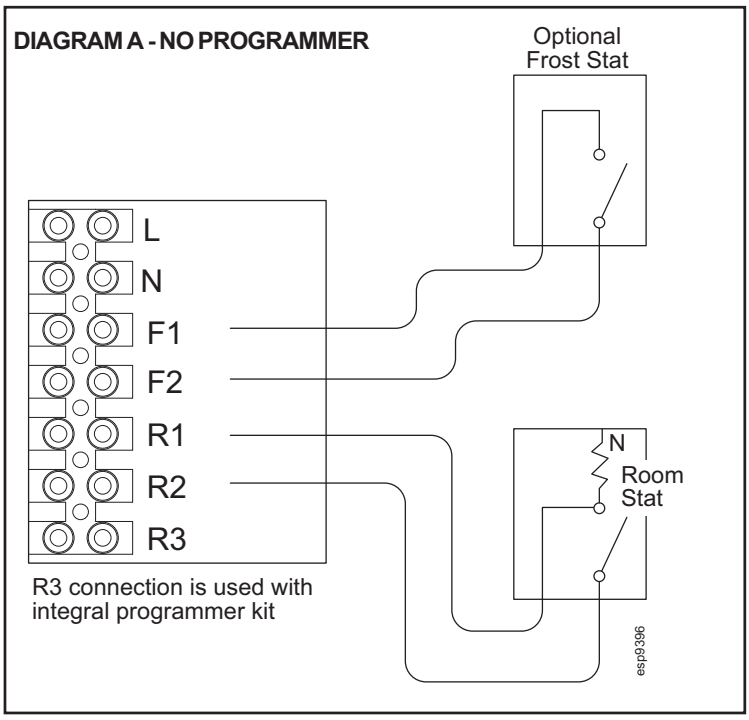

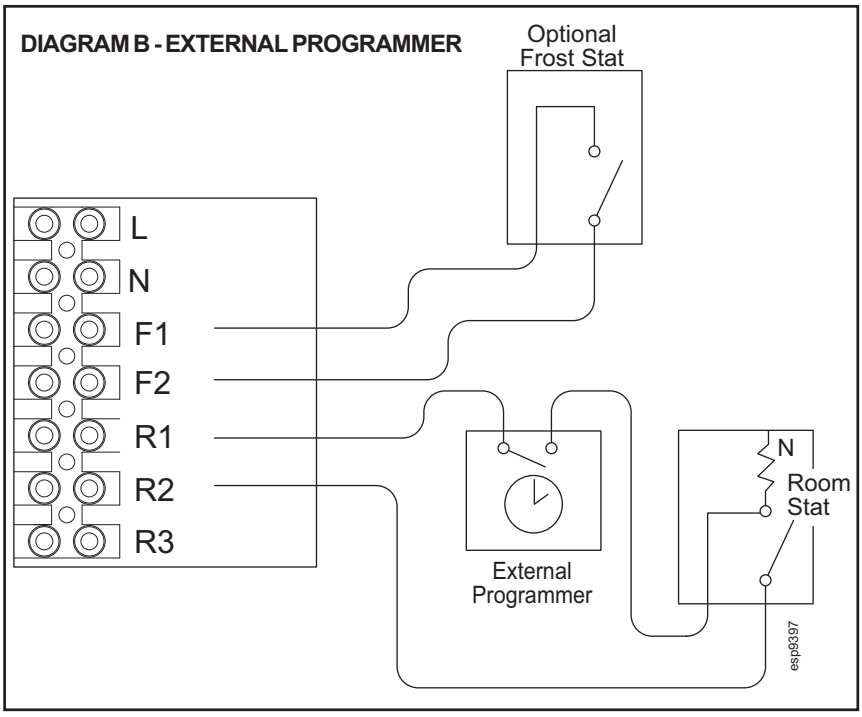

35 REPLACING PRE-FITTED MAINS CABLE

If it is necessary to use an alternative mains cable to the one pre-fitted then use the following guide.

Replacement wiring should comply with notes in Frame 33.

1. Isolate the mains supply to the boiler.
2. Remove the front panel. Refer to Frame 45.
3. Swing the control box down into the service position. Refer to Frame 46.
4. Remove the terminal block cover to access the terminals for electrical connections.
5. Remove the mains cover to access the earth post.
6. Remove the live and neutral wires from the terminal block.
7. Remove the top nut from the earth post and remove the earth connection ring terminal from the post.
8. Slacken the cable gland and withdraw the mains cable.
9. Route replacement cable back through the cable gland and re-tighten to provide cord anchorage.
10. Connect the earth wire to the earth post by trapping the stripped end between the cupped and flat washer. Secure with nut provided.
11. Connect the live and neutral wires to the terminal strip.

    When making the mains electrical connections to the boiler it is important that the wires are prepared in such a way that the earth conductor is longer than the current carrying conductors, such that if the cord anchorage should slip, the current carrying conductors become taut before the earthing conductor.
12. Re-fit the mains and terminal block covers ensuring cables are located in the cable entry position.
13. Swing the control box back up into the operating position and re-fit the front panel ensuring a good seal is made.

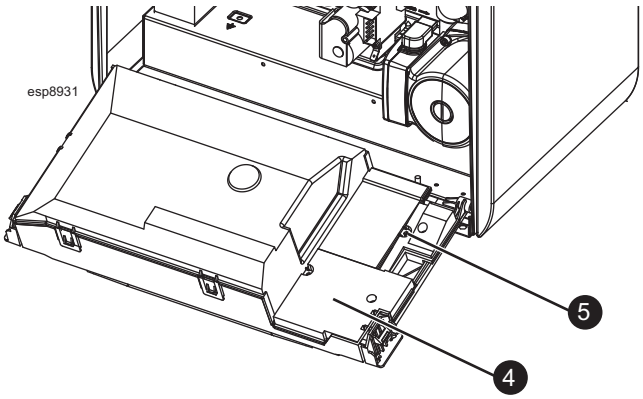

Earth Post

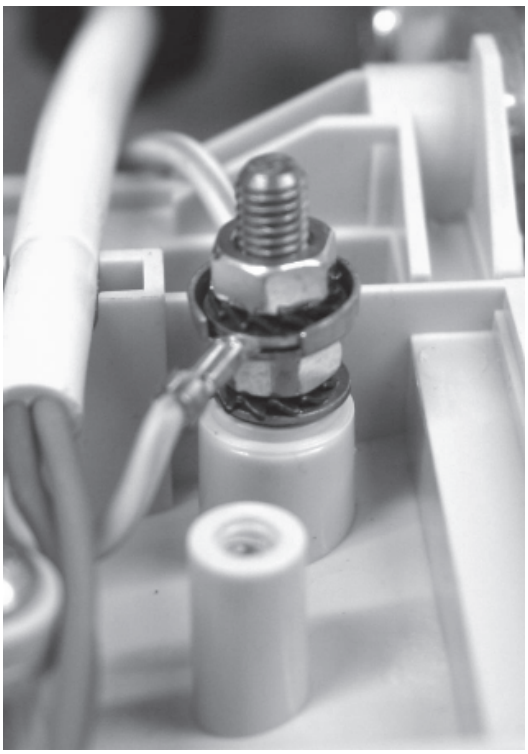

36 PICTORIAL WIRING DIAGRAM

LEGEND

b	- blue	**gy**	- grey	**v**	- violet
bk	- black	**or**	- orange	**w**	- white
br	- brown	**pk**	- pink	**y**	- yellow
		r	- red	**y/g**	- yellow/green

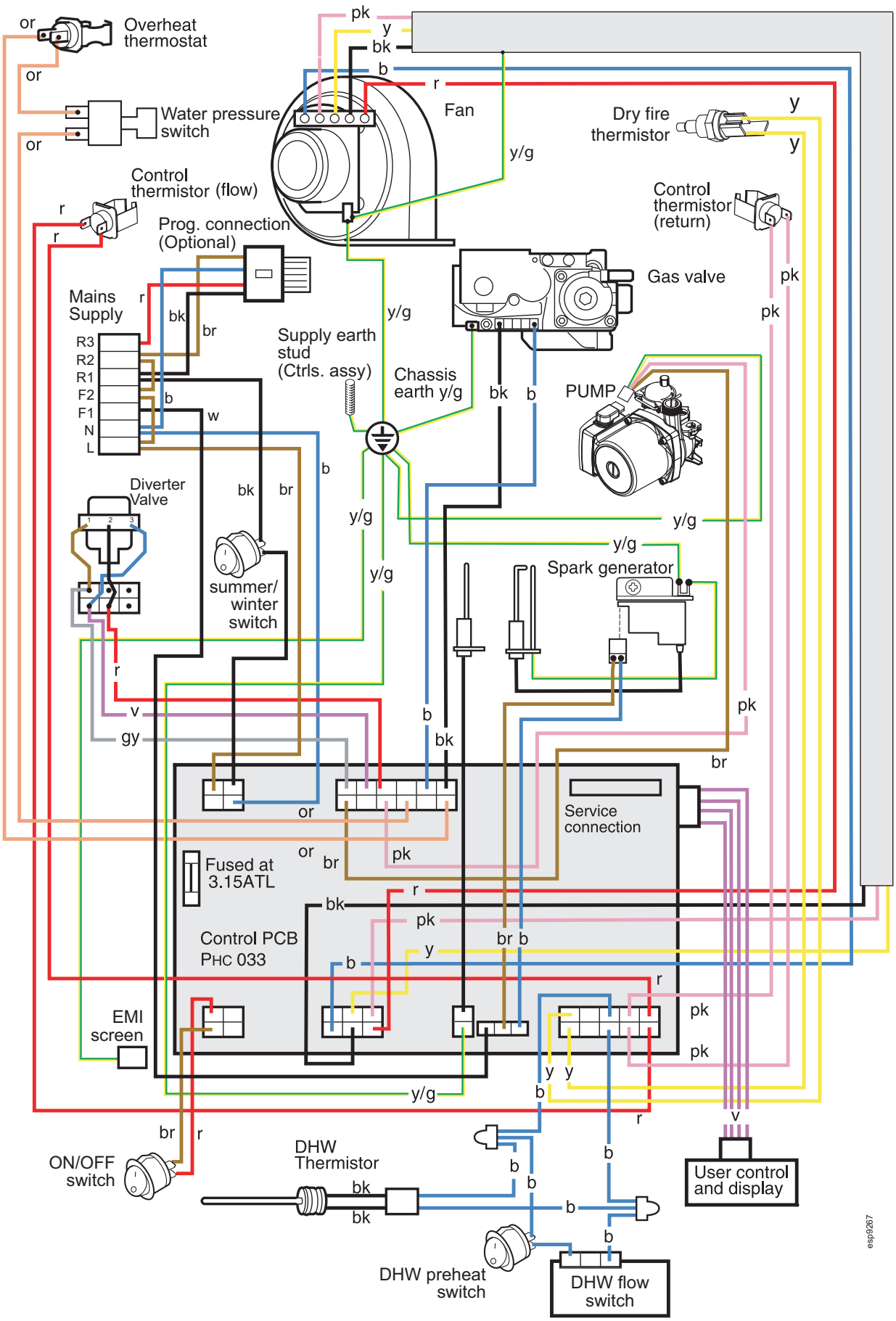

37 FUNCTIONAL FLOW WIRING DIAGRAM

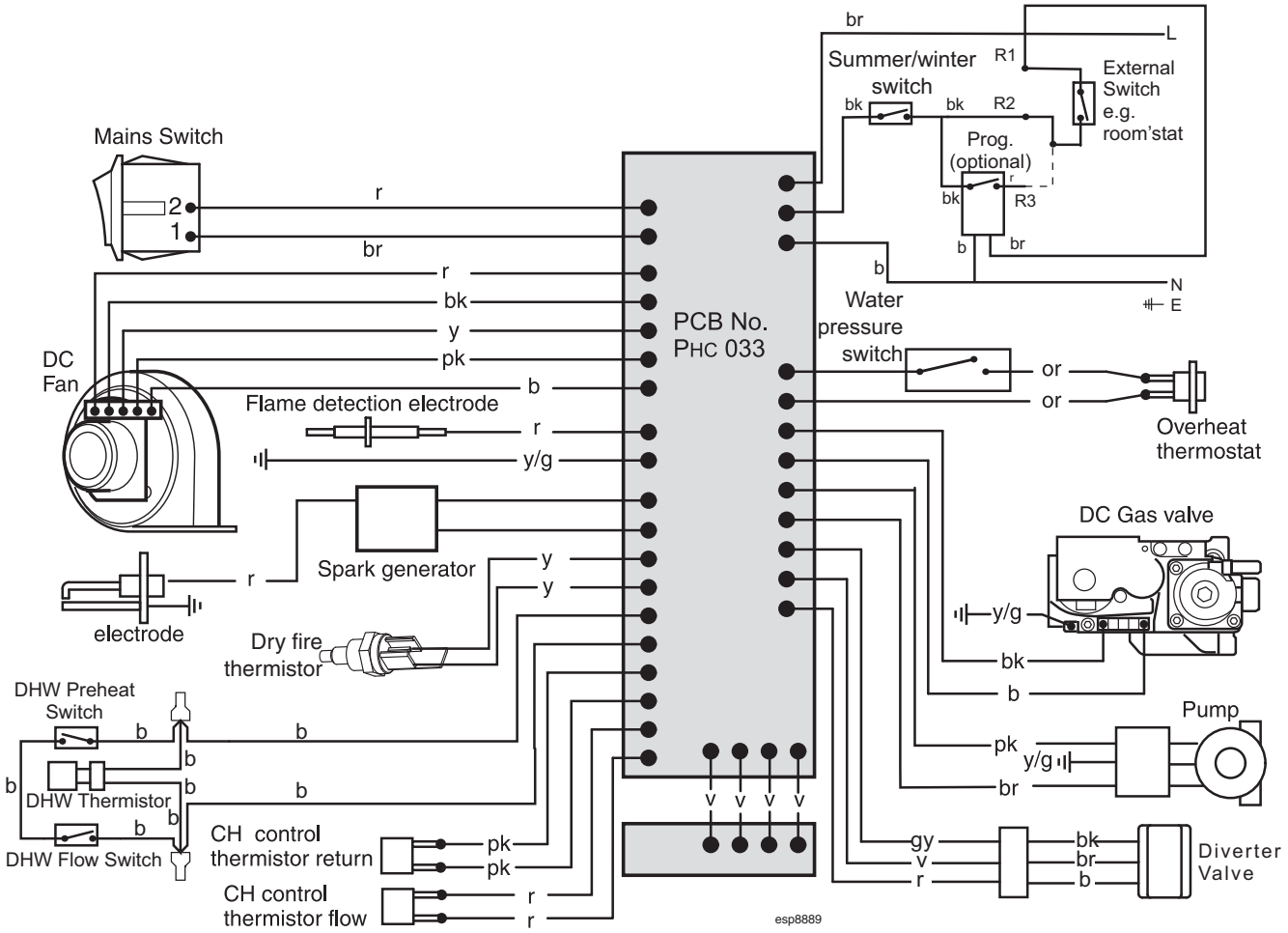

LEGEND

b - blue	**or** - orange	
bk - black	**pk** - pink	**w** - white
br - brown	**r** - red	**y** - yellow
gy - grey	**v** - violet	**y/g** - yellow/green

38 COMMISSIONING AND TESTING

A. Electrical Installation

1. Checks to ensure electrical safety should be carried out by a competent person.
2. ALWAYS carry out the preliminary electrical system checks, i.e. earth continuity, polarity, resistance to earth and short circuit, using a suitable test meter.

B. Gas Installation

1. The whole of the gas installation, including the meter, should be inspected and tested for tightness and purged in accordance with the recommendations of BS. 6891. In IE refer to IS.813:2002.
2. Purge air from the gas installation by the approved methods only.

WARNING. **Whilst effecting the required gas soundness test and purging air from the gas installation, open all windows and doors, extinguish naked lights and *DO NOT SMOKE.***

39 INITIAL LIGHTING

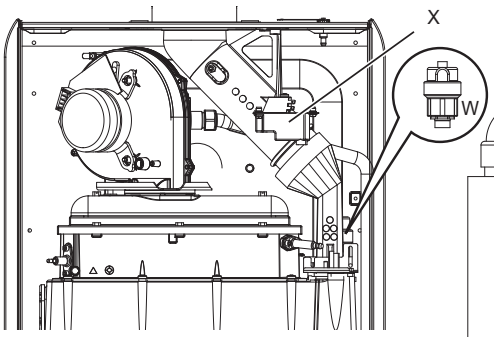

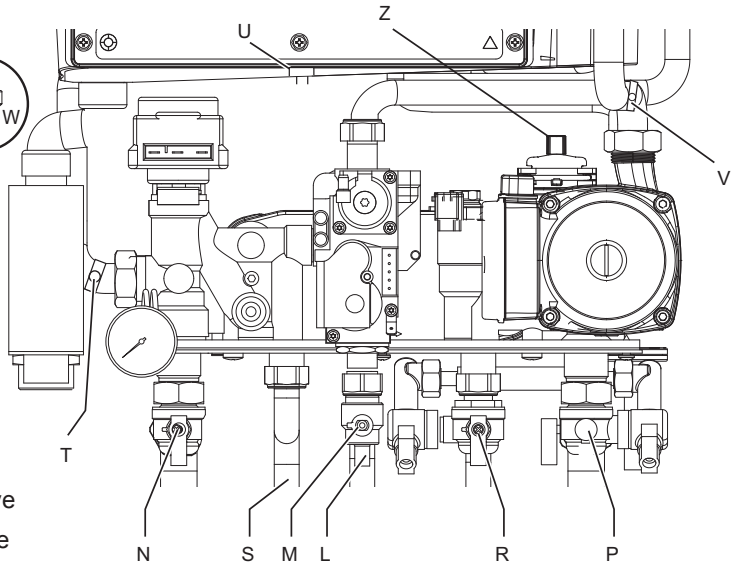

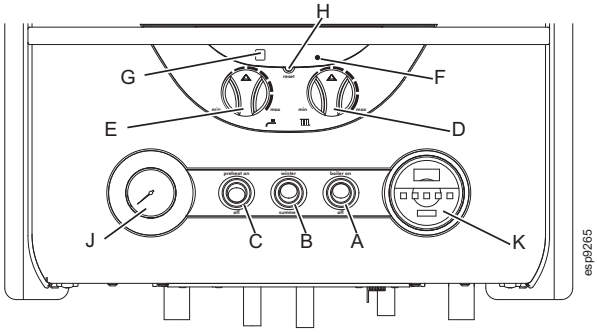

LEGEND

A. Boiler On/Off switch	**M.** Gas Service Cock
B. Winter/Summer Switch	**N.** CH Flow Isolating Valve
C. Preheat On/Off Switch	**P.** CH Return Isolating Valve
D. CH Temperature Control	**R.** DHW Inlet Isolating Valve
E. DHW Temperature Control	**S.** DHW Outlet
F. Burner Light	**T.** Overheat Thermostat
G Display	**U.** Control thermistor (flow)
H. Reset Button	**V.** Return Thermistor
J. Pressure Gauge	**W.** Auto Air Vent (Heat exch.)
K. Programmer Kit (Optional)	**X.** Spark Generator
L. Inlet Pressure Test Point	**Z.** Auto Air Vent (Pump)

1. Check that the system has been filled and that the boiler is not airlocked. Ensure the automatic air vent caps (W & Z) are open.

Note.
It is important the burner is not operated before the system is fully vented of air. If it is necessary to operate the appliance pump to assist venting of the air this must be done with the gas service cock turned off.

2. Swing the control box to the working position .

3. Refit the boiler front panel. Refer to Frame 45.

4. Check that all the drain cocks are closed and that the CH and DHW isolating valves (N, P and R) are OPEN.

5. Check that the electrical supply is OFF.

6. Check that the boiler on/off switch (A) is off, the winter/summer switch (B) is in the winter position and the preheat switch (C) is on.

7. Check that the gas service cock (M) is OPEN.

8. Slacken the screw in the inlet pressure test point (L) and connect a gas pressure gauge via a flexible tube.

9. Switch the electricity supply ON and check all external controls are calling for heat.

10. CENTRAL HEATING
Set the CH temperature control (D) to maximum and switch the boiler on/off switch (A) to ON. The boiler control should now go through its ignition sequence until the burner is established.

11. If the boiler does not light after 3 attempts the fault code L F will be displayed, Press the reset button (H) and the boiler will repeat its ignition sequence.

When the burner is established the WHITE 'Burner On' light (F) will be illuminated, the display will show status **c**.

THE DISPLAY

The user control has one light and one display to inform the user about the status. The display will show the status of the boiler. The light will show the status of the flame. If no flame is detected the light is blinking. When the flame is detected the light will be lit permanently.

Below is a list with display function in normal operation.

0 Standby, no demand for heat present.

c Boiler is active for central heating.

d Boiler is active for domestic hot water.

t Boiler is heating up the plate heat exchanger.

H Boiler is in lockout for a specific error. Display will be blinking, alternating with a number or letter to show which error is detected.

L Boiler is in lockout for a specific error. Display will be blinking, alternating with a number or letter to show which error is detected.

Note.

If the boiler displays fault code 'LE' on installation, check the pressure gauge (J). The required minimum system pressure cold is 1.0 bar. See Frame 32 if system need filling.

continued . . . .

40 INITIAL LIGHTING - continued

12. DOMESTIC HOT WATER

With the boiler firing, set the DHW temperature control (E) to maximum and fully open a DHW tap.

The boiler should continue to run and the LED display should show status d.

13. Ensure that with the boiler operating the dynamic gas pressure is able to obtain maximum output. Refer to Table 2.
N.B. The principle of the 1:1 gas valve ensures that the **Esprit HE** range is able to deliver it's full output at inlet pressures down to 14mb. However if dynamic pressures below 20mb are experienced ensure this is adequate for **ALL** other gas appliances in the property.

IMPORTANT
The gas input to the burner is regulated by the gas valve according to the air flow produced by the fan. It is NOT user-adjustable. Any interference to sealed settings on the gas valve will adversely affect operation and render our warranty void.

14. Turn off the DHW tap.

15. Set the boiler on/off switch (A) to OFF.

16. Remove the pressure gauge and tube. Tighten the sealing screw in the pressure test point. Ensure a gas tight seal is made.

41 GENERAL CHECKS

Make the following checks for correct operation in:

DOMESTIC HOT WATER (DHW) MODE

1. With no call for CH or DHW the boiler should fire for a short period to preheat the DHW plate heat exchanger.
The display should read

t ☼ returning to

0 when the burner switches off.

Notes.

a. *If no DHW is drawn off, the boiler will fire periodically for a short time, to maintain the plate heat exchanger temperature.*

b. *The DHW preheat operates 24 hours a day with the preheat switch in the 'ON' position. Preheat can be disabled with the switch in the 'OFF' position.*

2. Fully open all DHW taps in turn and ensure that water flows freely from them.
The display should read:

d ☼ flashing then

d ☼ when the burner lights.

3. Close all taps except the furthest one from the boiler and check that the boiler is firing at maximum rate.

This is factory set to give a DHW temperature rise of approximately 35°C at the flow rate stated on page 6 under "operation".

4. Reduce the DHW draw-off rate to about 3 l/min (0.7gpm) and check that the boiler modulates to deliver DHW at approximately 65°C.

5. Close the DHW tap and check that the main burner extinguishes. The pump should overrun for a few seconds and the display sequence should read:

d

When the pump stops the display sequence should read:

0

Note. *On systems in excess of 2 bar inlet pressure a water pressure governor may be required to prevent water noise.*

42 GENERAL CHECKS - continued

CENTRAL HEATING (CH) & DOMESTIC HOT WATER (DHW) MODE.

1. Ensure that the CH external controls are calling for heat.
   The display should read:

   c ☼

   after first satisfying DHW preheat if necessary. (t ☼)
2. Fully open a DHW tap and check that hot water is delivered.
   The display should read:

   d ☼
3. **Gas Rate**
   Check the boiler gas rate when the boiler is at full DHW output.
   Check at the gas meter, with no other appliance in use. Refer to Table 3 for gas rates.
4. Close the DHW tap. The burner should go off and the pump continue to run.
   The display should read:

   d ☼ flashing

   then

   c ☼ flashing

   After 15 seconds the burner should relight, to supply central heating.
   The display should read:

   c ☼

CH & DHW CONT.

5. Set the central heating external controls to OFF. The burner should go off and the pump continue to run for a few seconds.

   The display should read:

   c returning to

   0 when the pump stops.
6. Check the correct operation of the programmer (if fitted) and all other system controls. Operate each control separately and check that the main burner responds.

WATER TEMPERATURES

Temperatures can be selected via the CH and DHW temperature controls.

Knob Setting	CH Flow Temp °C (°F)	DHW Outlet Temp °C (°F)
Max	82 (180)	65 (150)
Min	30 (86)	42 (110)

WATER CIRCULATION SYSTEM

1. With the system COLD, check that the initial pressure is correct to the system design requirements.

   For pre-pressurised systems, this should be 1.0 bar.
2. With the system HOT, examine all water connections for soundness. The system pressure will increase with temperature rise but should not exceed 2.5 bar.
3. With the system still hot, turn off the gas, water and electricity supplies to the boiler and drain down to complete the flushing process.

Note. *A flushing solution should be used during the flushing procedure. Flushing solutions: Fernox Superfloc, Sentinel X300 (new systems) or X400 (existing systems). Refer to Frame 6.*

4. Refill and vent the system, add inhibitor (see Frame 6), clear all air locks and again check for water soundness. Affix the water treatment warning label, supplied in the hardware pack, in a *prominent position* on the system, to prevent the use of incorrect water treatment additives.
5. Reset the system initial pressure to the design requirement.
6. Balance the system. Refer to Frame 5.
7. Check the condensate drain for leaks and check that it is discharging correctly.
8. Finally, set the controls to the User's requirements.

Note. *The pump will operate briefly as a self-check once every 24 hours in the absence of any system demand.*

43 HANDING OVER

After completing the installation and commissioning of the system the installer should hand over to the householder by the following actions:

1. Hand the User Instructions to the householder and explain his/her responsibilities under the relevant national regulations.

2. Explain and demonstrate the lighting and shutting down procedures.

3. The operation of the boiler and the use and adjustment of all system controls should be fully explained to the householder, to ensure the greatest possible fuel economy consistent with the household requirements of both heating and hot water consumption.

   Advise the User of the precautions necessary to prevent damage to the system and to the building, in the event of the system remaining inoperative during frosty conditions.

4. Explain the function and the use of the boiler heating and domestic hot water controls.

   Explain that due to system variations and seasonal temperature fluctuations DHW flow rates/temperature rise will vary, requiring adjustment at the draw off tap. It is therefore necessary to draw the users attention to the section in the Users Instructions titled “Control of Water Temperature” and the following statement:

   “Additionally, the temperature can be controlled by the user via the draw-off tap: the lower the rate the higher the temperature, and vice versa”.

5. Explain the function of the boiler fault mode.

   Emphasise that if a fault is indicated, the boiler should be turned off and a CORGI registered local heating installer consulted. In IE contact a competent person.

6. Explain and demonstrate the function of time and temperature controls, radiator valves etc., for the economic use of the system.

7. If a programmer is fitted draw attention to the Programmer Users Instructions and hand them to the householder.

8. **Loss of system water pressure**

   Explain that the dial behind the controls panel indicates the central heating system pressure and that if the normal COLD pressure of the system is seen to decrease over a period of time then a water leak is indicated. Explain the re-pressurising procedure and if unable to re-pressurise or if the pressure continues to drop a registered local heating installer should be consulted.

WARNING.

Do not fire the boiler if the pressure has reduced to zero from the original setting.

9. **After installation and commissioning please complete the benchmark Commissioning Checklist before handover to the customer.**
   For IE, its is necessary to complete a “Declaration of Conformity” to indicate compliance to I.S. 813:2002.

10. **IMPORTANT**

    A comprehensive service should be carried out ANNUALLY.

    Stress the importance of regular servicing by a CORGI registered installer. In IE servicing work must be carried out by a competent person.

11. As the installer you may wish to undertake the service contract yourself or alternatively offer to the customer the benefits of the Ideal Care Scheme, details of which are outlined in the householder pack supplied with this boiler.

44 SERVICING SCHEDULE

WARNING. **Always turn OFF the gas supply at the gas service cock, and switch OFF and disconnect the electricity supply to the appliance before servicing.**

To ensure the continued safe and efficient operation of the appliance it is recommended that it is checked at regular intervals and serviced as necessary. The frequency of servicing will depend upon the installation condition and usage but should be carried out at least annually.

It is the law that any service work must be carried out by a CORGI registered installer. In IE service work must be carried out by a competent person.

1. Light the boiler and carry out a pre-service check, noting any operational faults.
2. Clean the main burner.
3. Clean the heat exchanger and the condensate trap/siphon.
4. Check the condition of the combustion chamber insulation. Any cracked, damaged or displaced pieces should be replaced. Ionisation probes are a servicable component and require inspecting annually. Replace if distorted.
5. Check the main injector for blockage or damage.
6. Check that the flue terminal is unobstructed and that the flue system is sealed correctly.
7. Check the DHW filter for blockage. Refer to Frame 75.

The servicing procedures are covered more fully in Frames 46-51 and MUST be carried out in sequence.

Note. *In order to carry out either servicing or replacement of components the boiler front panel must be removed. Refer to Frame 45.*

IMPORTANT.

8. After completing the servicing or exchange of components always test for gas tightness.
9. When work is complete the boiler front panel MUST be correctly refitted, ensuring that a good seal is made.

Do NOT OPERATE the boiler if the front panel is not fitted.

10. If, for any reason, the condensate trap/siphon has been removed ensure it is refilled with water before reassembling.
11. Check the gas consumption.
12. Connect a suitable gas analyser to the sampling point on the top of the boiler (refer to Frame 45) or into the flue terminal if access is possible (optional test).
    For correct boiler operation, the CO/CO_2 content of the flue gas should not be greater than 0.004 ratio.
13. Complete the service section in the Benchmark Commissioning Checklist.

45 BOILER FRONT PANEL REMOVAL

1. Loosen the 2 screws securing the front panel (located under the boiler).
2. Pull the tabs on the retaining clips to release the bottom of the front panel.
3. Pull the panel forward at the bottom and lift to disengage the top lugs.

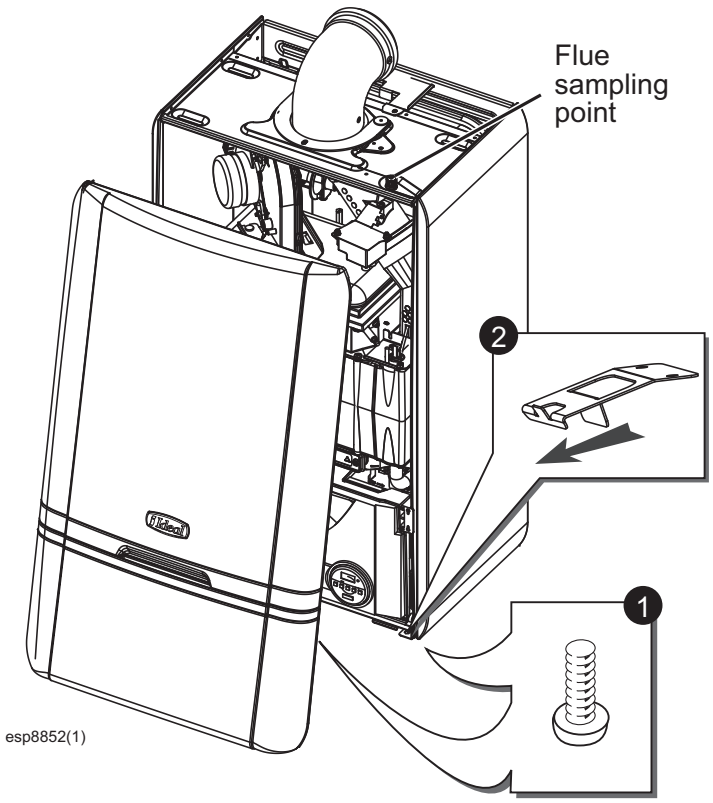

46 THE CONTROL BOX IN THE SERVICING POSITION

1. Pull the panel forward at the top to disengage the two clips.
2. Carefully swing the control down into its servicing position.

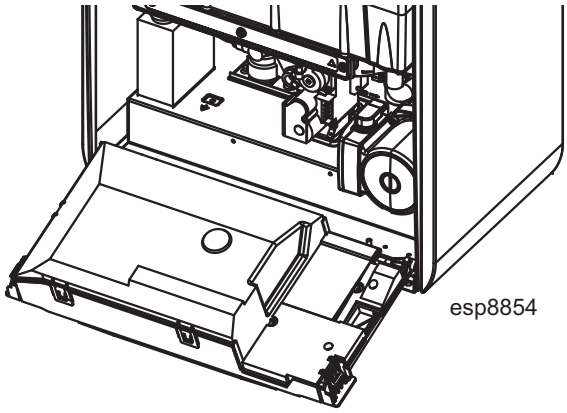

47 FAN AND VENTURI ASSEMBLY REMOVAL AND CLEANING

1. Disconnect the electrical leads from the fan.
2. Undo the gas pipe union connection to the injector housing.
3. Undo the screw on the fan mounting bracket.
4. Lift off fan and venturi assembly.
5. Inspect the injector for blockage or damage.

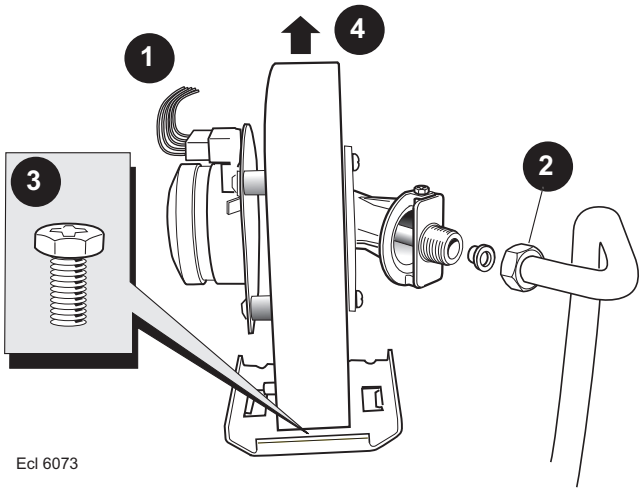

48 BURNER REMOVAL AND CLEANING

1. Remove the 6 screws securing the burner (the 3 screws at the rear are extended to ease access).
2. Lift off the burner from the combustion chamber.

IMPORTANT

The burner head is a ceramic plaque construction. Care must be taken to ensure that **the burner is not placed down upon its face** as this may cause damage to the ceramic.

3. Brush off any deposits that may be on the ceramic with a SOFT brush.
4. Inspect the sealing gasket around the burner and combustion chamber insulation for any signs of damage. Replace as necessary.

Note.

Take care not to disturb the ionisation probes at the front and rear of the combustion chamber.

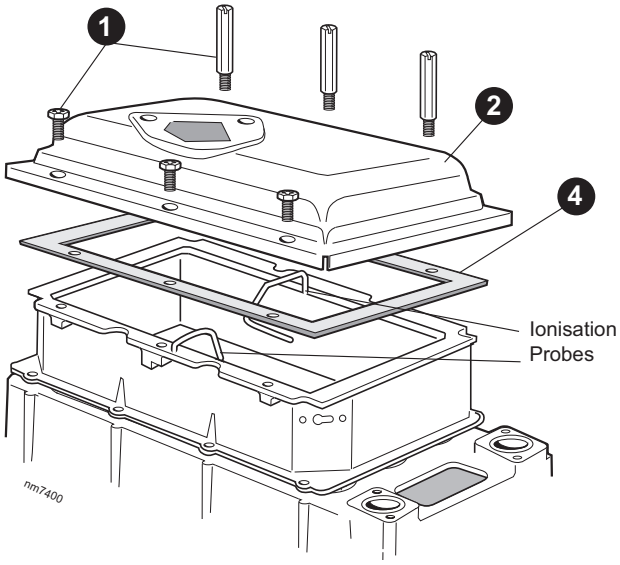

49 CLEANING THE CONDENSATE TRAP/SIPHON

1. Remove the cleaning plug and allow any residual condensate / debris to drain.

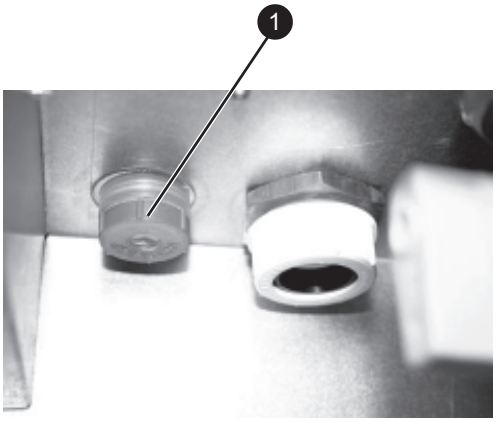

2. If necessary pull off the top tube and flush out any debris.
3. Replace the tube and cleaning plug.

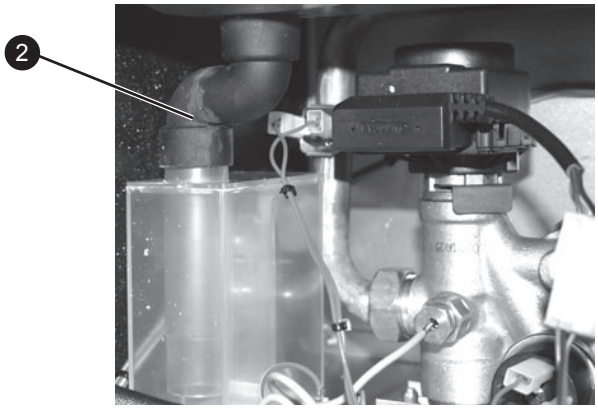

50 CLEANING THE HEAT EXCHANGER

1. Remove ignition and flame detection electrodes. Refer to Frames 58 & 59.
2. Remove the 3 screws retaining the sump cover and remove.
3. Using a suitable tool as supplied in the standard British Gas Flue brush kit, clean between the heat exchanger fins from the top of the heat exchanger.
4. Access to the base of the heat exchanger is now possible. Brush clean any deposits from the base of the heat exchanger and remove any loose deposits from the sump.
5. Inspect the ignition and detection electrodes. Ensure that they are clean and in good condition - replace if necessary.
6. Check the condition of the combustion chamber insulation. Any cracked or damaged pieces must be replaced.

Note. *Take care not to disturb the ionisation probes at the front and rear of the combustion chamber.*

7. Check that the ignition and detection gaps are correct. Refer to Frames 58 & 59.

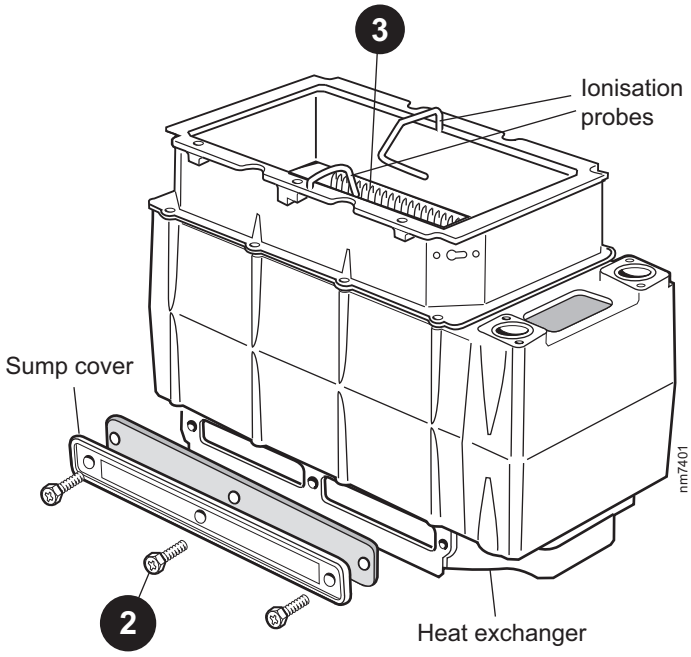

51 REASSEMBLY

Reassemble the boiler in the following order:

1. Refit the sump cover.
2. Refit the electrodes. (Check dimensions; Frames 58 & 59).
3. Refit the burner.
4. Refit the fan / venturi assembly.
5. Reconnect the fan electrical leads.
6. Swing the control box back into its working position and secure.
7. Re-fit the boiler front panel.

IMPORTANT.

8. Ensure that the boiler front panel is correctly fitted by engaging the securing clips and that a good seal is made.
9. Turn on the gas supply at the gas service cock.
10. Reconnect the electrical supply.

52 REPLACEMENT OF COMPONENTS

GENERAL

When replacing ANY component

1. Isolate the electricity supply.
2. Turn off the gas supply.
3. Remove the boiler front panel. Refer to Frame 45.

After replacing ANY component check operation of the boiler, including gas tightness, gas rate and combustion test.

IMPORTANT.
When work is complete, the front panel, if removed, must be correctly refitted - ensuring that a good seal is made.

Notes.

1. *In order to assist fault finding, the control panel has an LED diagnostic display. The key to boiler fault conditions is shown in Frame 84.*
2. *In order to replace some components it is necessary to drain the boiler. Refer to Frame 72.*

THE BOILER MUST NOT BE OPERATED WITHOUT THE FRONT PANEL FITTED

53 DRY FIRE THERMISTOR REPLACEMENT

1. Refer to Frame 52.
2. Drain down the boiler. Refer to Frame 72.
3. Unplug the electrical lead.
4. Unscrew the thermistor.
5. Fit the new thermistor using the sealing washer provided.
6. Reassemble in the reverse order.
7. Check the operation of the boiler. Refer to Frame 52 .

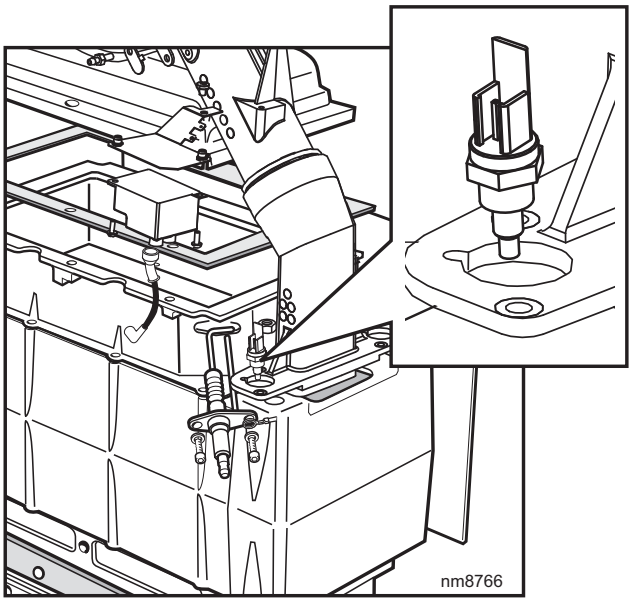

54 FAN REPLACEMENT

1. Refer to Frame 52.
2. Disconnect the electrical leads from the fan.
3. Undo the gas pipe union connection to the injector housing.
4. Remove the screw retaining the fan mounting bracket.
5. Remove the fan and venturi assembly. Refer to Frame 47.
6. Unscrew the 3 screws and remove the venturi assembly, *noting the orientation of the venturi in relation to the fan body.*
7. Transfer the venturi assembly to the new fan, replacing the gasket if evidence of damage or deterioration is visible.
8. Fit the new fan / venturi assembly.
9. Reassemble the boiler in reverse order, taking care not to overtighten the screw on the fan mounting bracket.
10. Check the operation of the boiler. Refer to Frame 52.

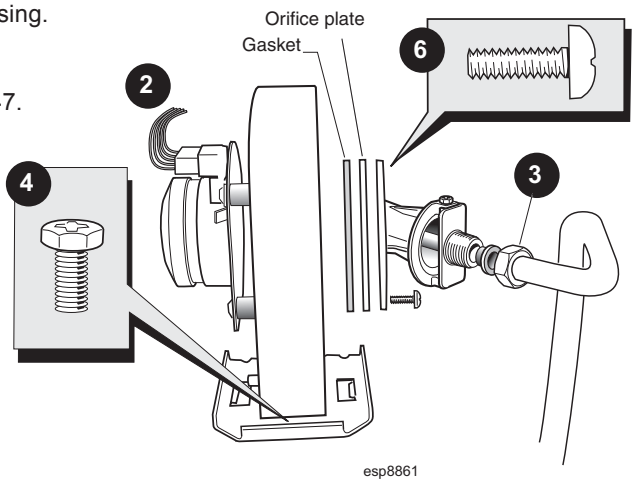

55 BURNER INJECTOR REPLACEMENT

1. Refer to Frame 52.
2. Disconnect the electrical leads from the fan.
3. Undo the gas pipe union connection to the injector housing.
4. Remove the screw retaining the fan mounting bracket.
5. Remove the fan and venturi assembly
6. Remove the 2 injector housing screws.
7. Withdraw the injector housing.
8. Fit the new injector housing complete with injector.
9. Reassemble in reverse order, ensuring that the new gas seal supplied is located correctly in the injector housing.
10. Check operation of the boiler. Refer to Frame 52.

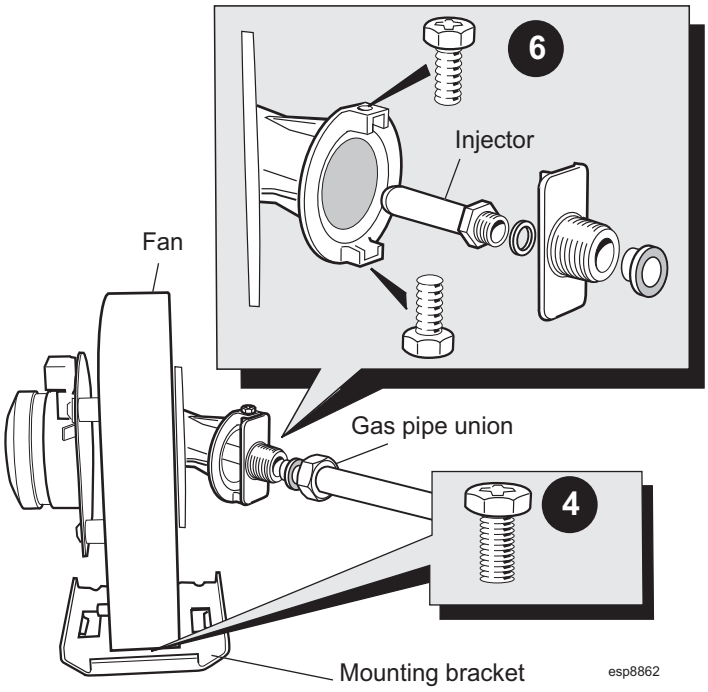

56 BURNER REPLACEMENT

1. Refer to Frame 52.
2. Remove the fan assembly. Refer to Frame 47.
3. Remove the 6 screws securing the burner (the 3 screws at the rear are extended to ease access).
4. Lift off the burner from the combustion chamber.
5. Fit the new burner, replacing any damaged or deteriorating sealing gasket.
6. Reassemble in reverse order.
7. Check the operation of the boiler. Refer to Frame 52.

Note. *Take care not to disturb the ionisation probes at the front and rear of the combustion chamber.*

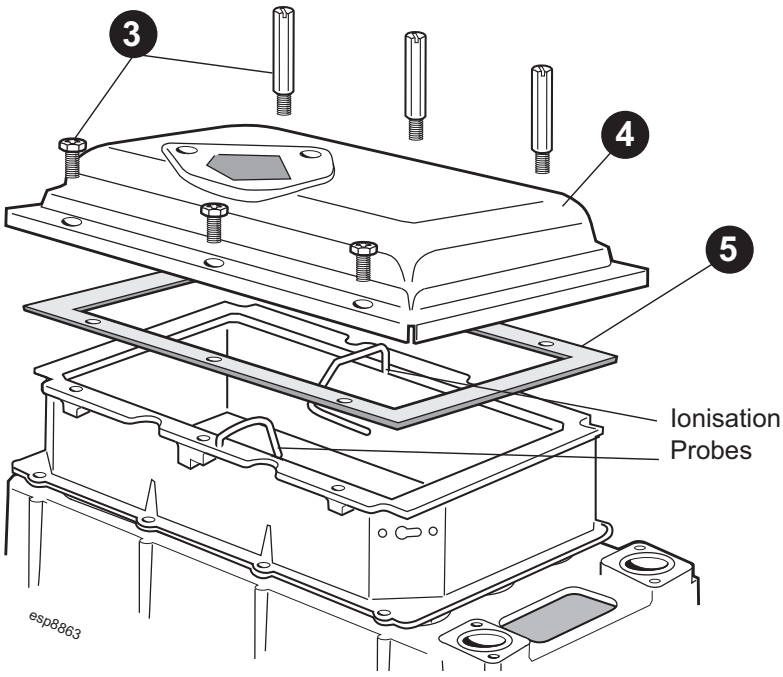

57 CONTROL THERMISTOR, RETURN THERMISTOR & OVERHEAT 'STAT REPLACEMENT

(Note. Refer to Frame 39 for locations)

1. Refer to Frame 52.
2. Unclip the thermistor / thermostat from the flow / return pipe and withdraw it from the controls compartment.
3. Disconnect the electrical leads from the thermistor / thermostat.
4. Reconnect the electrical leads to the replacement part and reassemble in reverse order, ensuring that the spring clip is securely on the pipe.
5. Check the operation of the boiler. Refer to Frame 52.

Overheat Thermostat

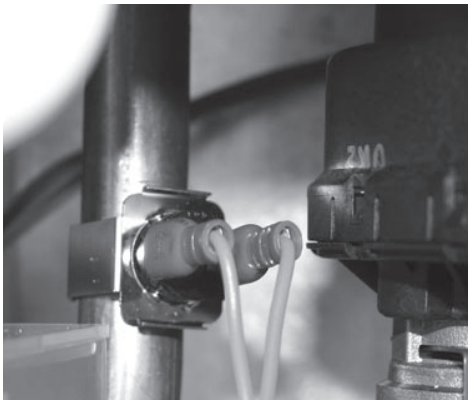

Control Thermistor

Return Thermistor

58 IGNITION ELECTRODE REPLACEMENT

1. Refer to Frame 52.
2. Unplug the ignition lead from the electrode.
3. Remove the earth lead from the ignition electrode.
4. Remove the remaining screw holding the ignition electrode to the combustion chamber.
5. Remove the electrode.
6. Fit the new ignition electrode, using the new gasket supplied. Check dimensions as shown.
7. Reassemble in reverse order, and check that no damage to the combustion chamber insulation has occurred during the electrode replacement.
8. Check the operation of the boiler. Refer to Frame 52.

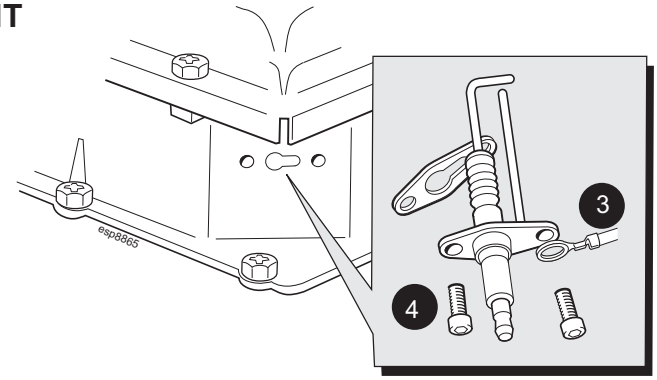

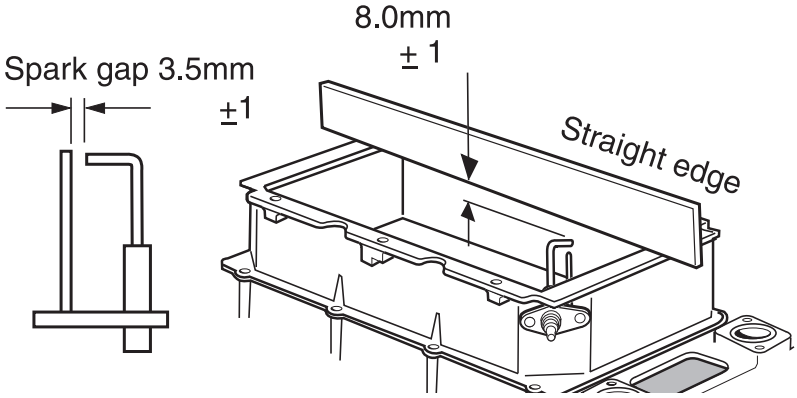

59 FLAME DETECTION ELECTRODE REPLACEMENT

1. Refer to Frame 52.
2. Unplug the flame detection lead from the electrode.
3. Remove the 2 screws holding the flame detection electrode to the combustion chamber.
4. Remove the electrode.
5. Fit the new flame detection electrode, using the new gasket supplied. Check dimensions as shown.
6. Reassemble in reverse order, and check that no damage to the combustion chamber insulation has occurred during the electrode replacement.
7. Check the operation of the boiler. Refer to Frame 52.

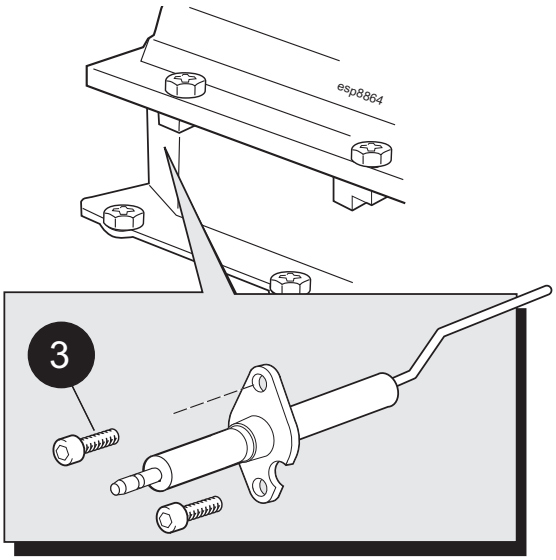

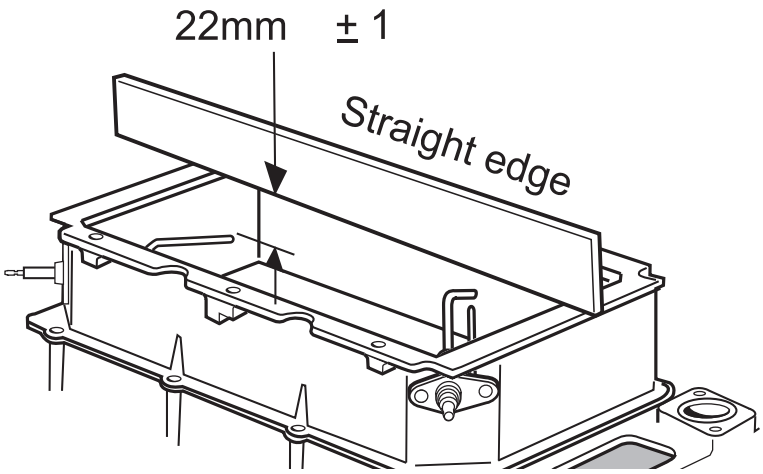

60 SPARK GENERATOR REPLACEMENT

1. Refer to Frame 52.
2. Disconnect the leads from the spark generator and bracket.
3. Remove the M5 screw securing the spark generator bracket to the flue casting.
4. Remove the 2 M4 screws securing the spark generator to the bracket.
5. Fit the new spark generator and re-assemble in reverse order.
6. Check operation of the boiler. Refer to Frame 52.

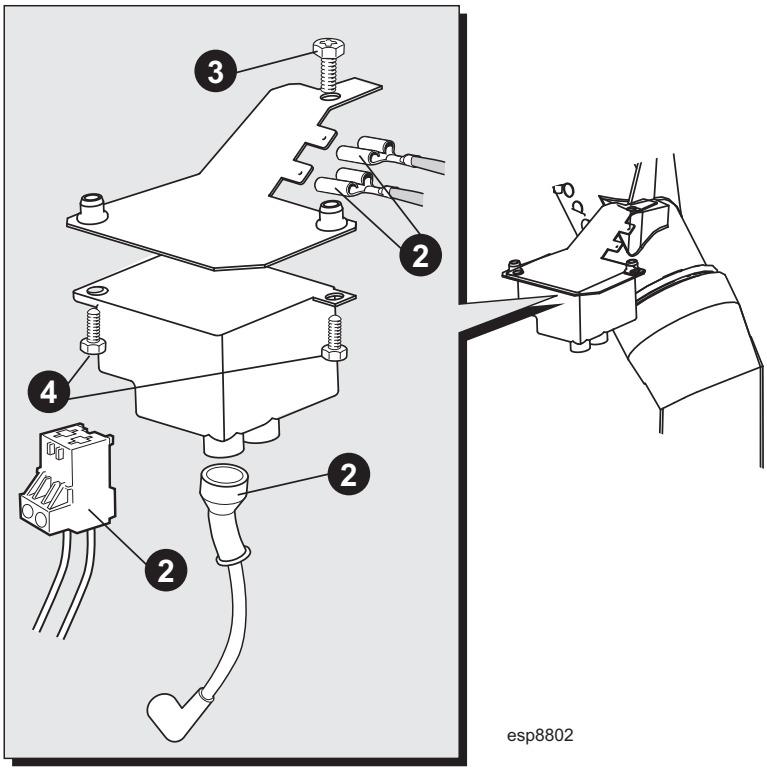

61 GAS CONTROL VALVE REPLACEMENT

1. Refer to Frame 52.
2. Swing the control box down into the servicing position. Refer to Frame 46.
3. Unplug the electrical lead connection from the gas control valve and disconnect the earth wire.
4. Undo the gas inlet pipe union at the gas service cock.
5. Undo the union nut on the outlet of the gas control valve.
6. Remove the back nut retaining the valve to the bottom panel and withdraw the valve upwards.
7. Fit the new gas control valve.
8. Check operation of the boiler. Refer to Frame 52.

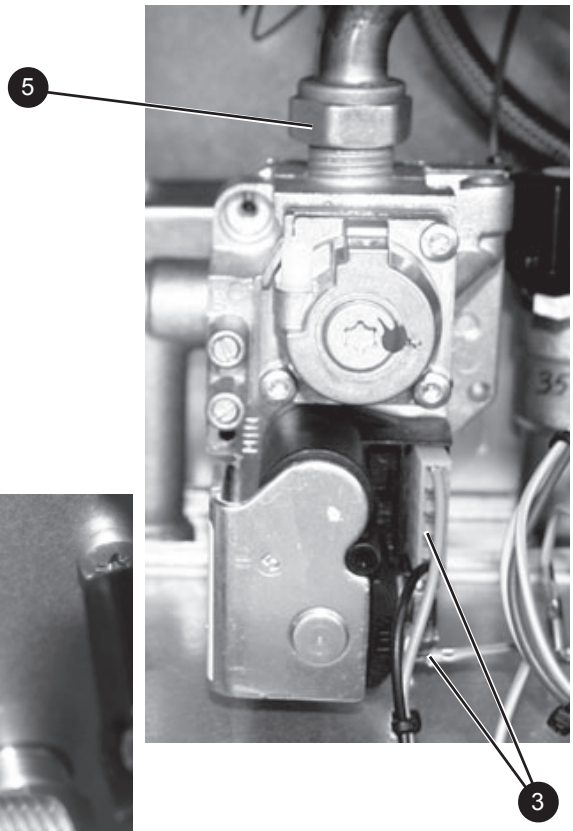

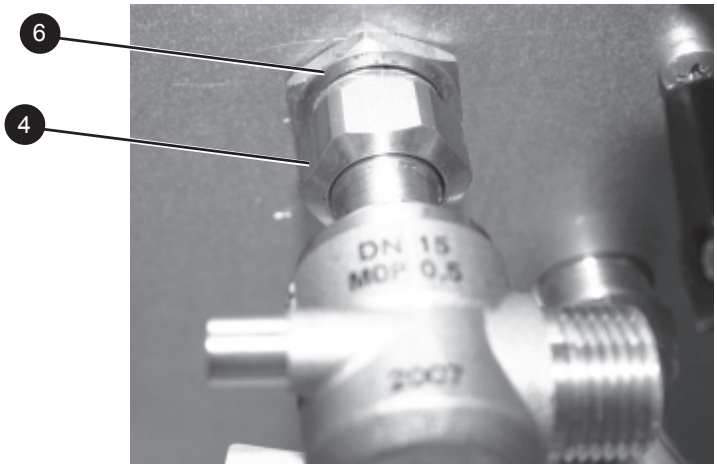

62 DIVERTER VALVE ACTUATOR REPLACEMENT

1. Refer to Frame 52.
2. Swing the control box down into the servicing position. Refer to Frame 46.
3. Remove the electrical connection.
4. Using a suitable tool pull out the retaining clip and lift the diverter head from the brass body.
5. Fit new actuator head and reassemble in reverse order.
6. Check operation of the boiler. Refer to Frame 52.

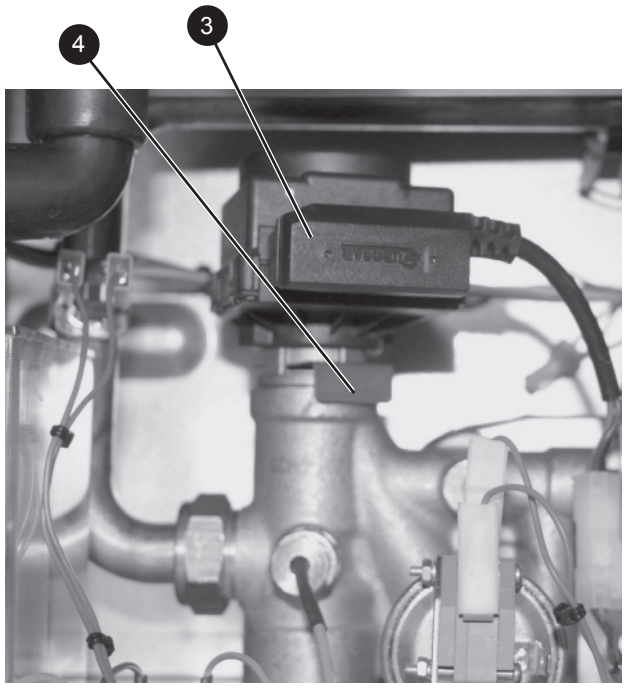

63 COMBUSTION CHAMBER INSULATION REPLACEMENT

The insulation boards used in the combustion chamber of this product are made of high temperature glass fibres with a binder of organic and inorganic materials.

Ideal Stelrad Group recommend that, for your own comfort and safety and to comply with good working practice, the procedure described below is followed:

1. Refer to Frame 52.
2. Remove the fan / venturi assembly. Refer to Frame 47.
3. Remove the burner. Refer to Frame 48.
4. Remove the ignition electrode. Refer to Frame 58.
5. Remove the flame detection electrode. Refer to Frame 59.
6. Remove the front and rear ionisation probes. Ionisation probes are a servicable component and require inspecting annually. Replace if distorted.

Prior to removal of the board the following protective equipment should be worn:

- **Face mask supplied with the spare part.**
- **Gloves supplied with the spare part.**

7. Damp down the combustion chamber area containing the insulation boards.
8. Remove the split pin and washer from the RHS of the combustion chamber.
9. Remove the insulation boards. The replacement boards are supplied in a plastic bag. This bag should be retained and the discarded boards should now be placed into it.
10. Sweep any dampened particles and place in the plastic bag.
11. Fit new insulation boards.

Note.
The boards are designed to be interlocking and should be fitted as shown.

12. Fit the new split pin and washer in the RHS of the chamber.
13. Remove the gloves and face mask and place them in the plastic bag.
14. Wash your hands and any areas of skin which may have come into contact with any of the particles from the insulation board.

Note. *Seal the plastic bag and dispose of it and its contents into a commercial tip.*

15. Reassemble in reverse order, **remembering to re-fit the ionisation probes first**.
16. Check operation of the boiler. Refer to Frame 52.

Fit insulation in the following order:

1. Rear.
2. Left Hand Side.
3. Front.
4. Right Hand Side.

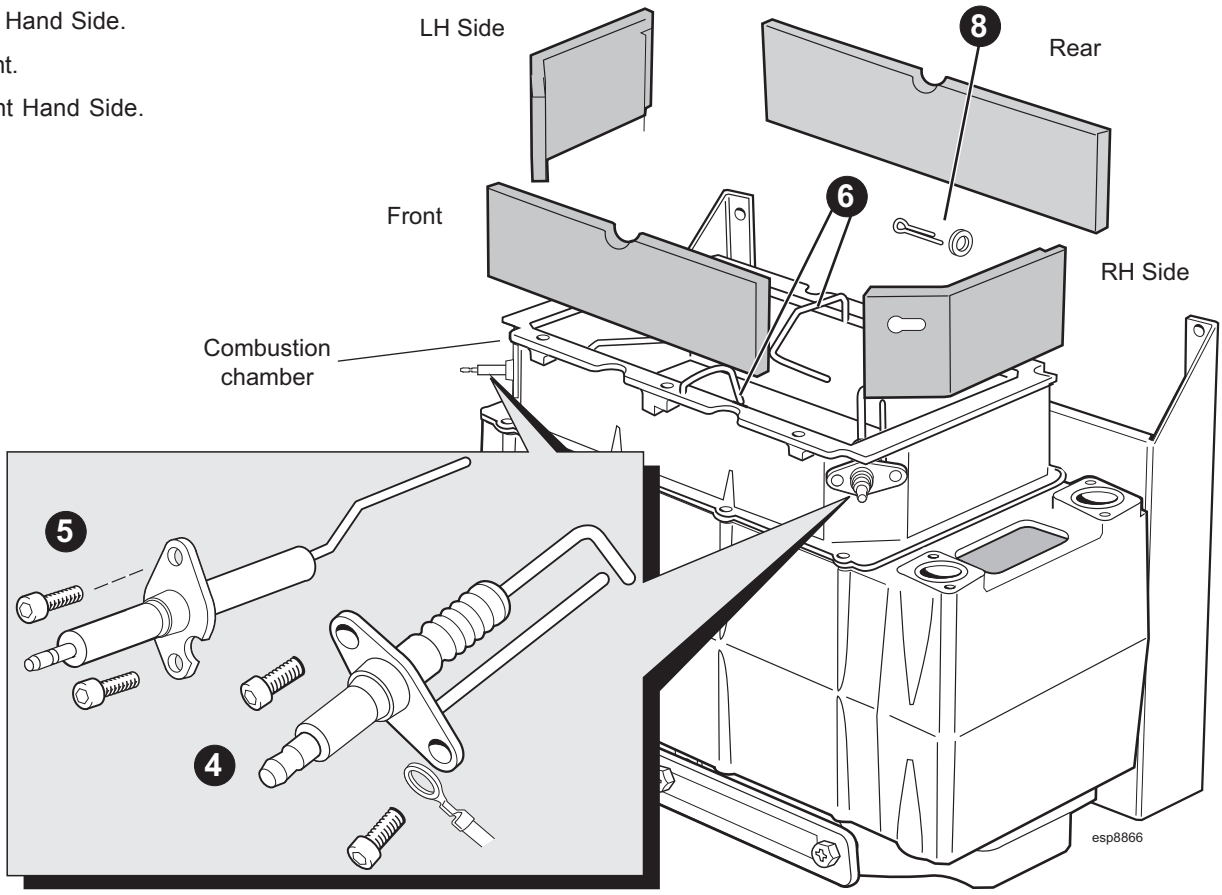

64 CONDENSATE TRAP/SIPHON REPLACEMENT

1. Refer to Frame 52.
2. Swing the control box down into the servicing position. Refer to Frame 46.
3. Pull off the rubber top pipe.
4. Undo the siphon plastic union connection.
5. Remove the backnut retaining the siphon to the bottom panel.
6. Fit the new siphon in reverse order ensuring the siphon is full of water.
7. Check operation of the boiler. Refer to Frame 52.

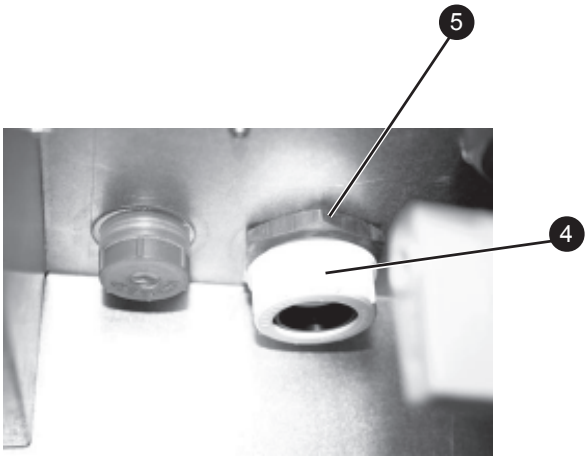

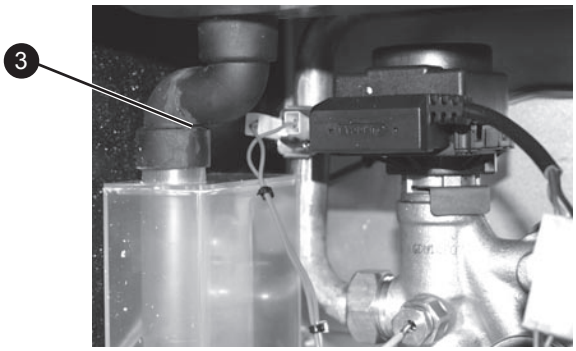

65 DHW THERMISTOR REPLACEMENT

1. Refer to Frames 52 & 72 for draining the appliance.
2. Swing the control box into the servicing position. Refer to Frame 46.
3. Drain the DHW circuit. Refer to Frame 72.
4. Unscrew the knurled retaining nut.
5. Disconnect the in line electrical connection and withdraw the thermistor.
6. Reassemble in reverse order.
7. Check operation of the boiler. Refer to Frame 52.

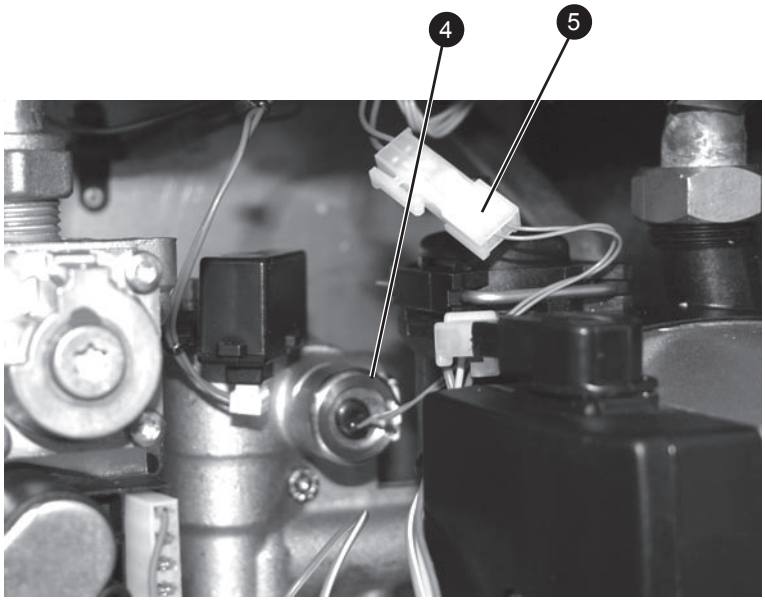

66 PRIMARY PCB REPLACEMENT

1. Refer to Frame 52.
2. Swing the control box down into the servicing position. Refer to Frame 46.
3. Remove the two screws retaining the control box lid.
4. Unclip the controls box lid and remove.
5. Remove all of the terminal connections to the primary PCB.
6. Unclip the two plastic posts retaining the primary PCB and remove.
7. Fit the new primary PCB.
8. Reassemble in reverse order.
9. Check the operation of the boiler. Refer to Frame 52.

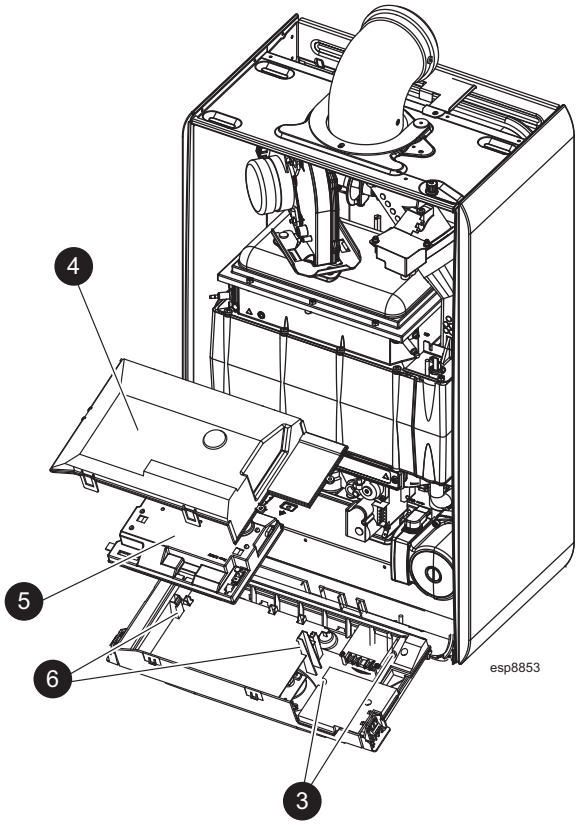

67 MAINS, PREHEAT AND SUMMER SWITCH REPLACEMENT

1. Refer to Frame 52.
2. Swing the control box down into the servicing position. Refer to Frame 46.
3. Remove the two screws retaining the control box lid.
4. Unclip the controls box lid and remove.
5. Push the switch/switches to be replaced out from the rear.
6. Disconnect electrical leads from switches.
7. Fit new switch, ensuring that the electrical leads are replaced on the correct terminals (refer to Frames 36 and 37) and the key on the switch is correctly aligned with the slot in the plastic moulding.
8. Reassemble in reverse order.
9. Check operation of boiler. Refer to Frame 52.

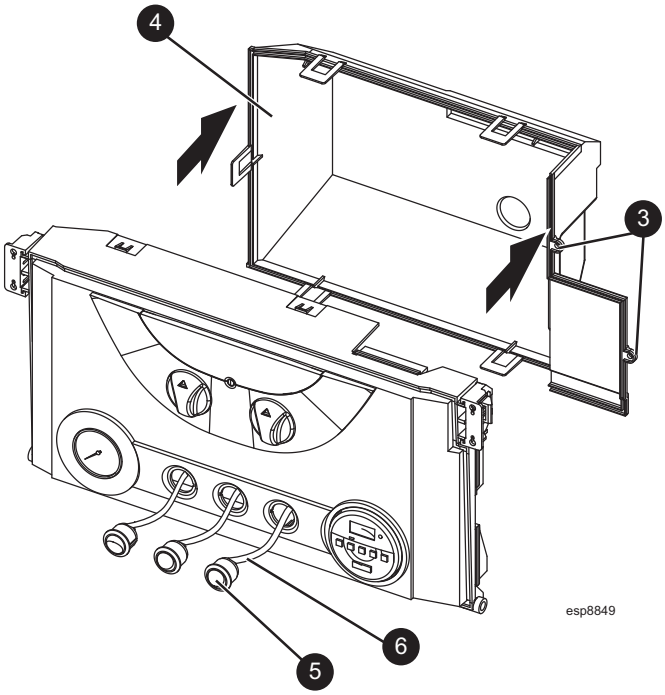

68 USER CONTROL PCB

Note. ***Anti static precautions must be observed when handling the user control PCB.***

1. Refer to Frame 52.
2. Swing the control box into the servicing position. Refer to Frame 46.
3. Remove the 2 screws retaining the control box lid.
4. Remove the Controls box lid by unclipping the plastic clips.
5. Unclip and remove the primary PCB. Refer to Frame 67.
6. Remove the plate interface shield.
7. Attach the earth strap supplied to wrist and clip on to main boiler chassis.
8. Remove the electrical connection from the back of the user control PCB.
9. Remove the three screws retaining the user control PCB and replace.
10. Re assemble the boiler in reverse order.
11. Check the operation of the boiler. Refer to Frame 52.

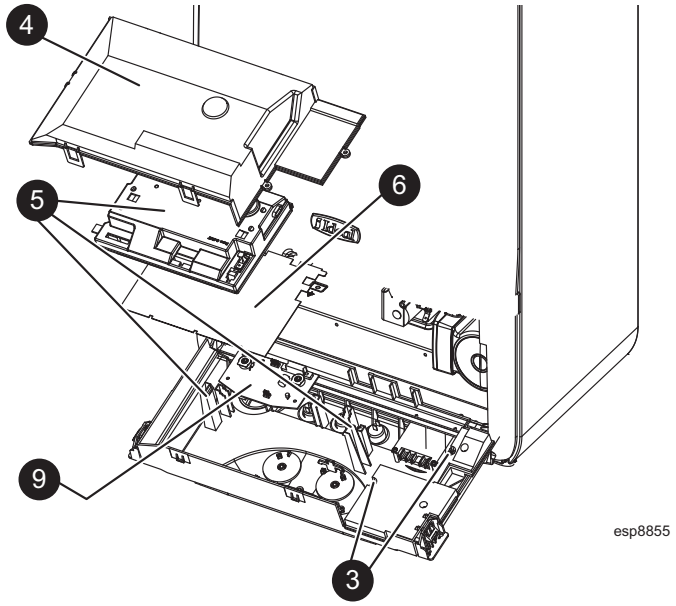

69 PRESSURE GAUGE REPLACEMENT

1. Refer to Frame 52.
2. Drain the boiler. Refer to Frame 72.
3. Swing the control box into the servicing position. Refer to Frame 46.
4. Unscrew the pressure gauge connection.
5. Remove the 2 screws retaining the controls box lid.
6. Remove the controls box lid by unclipping the plastic clips.
7. Unclip the pressure gauge head from the plastic control box surround.
8. Fit the new pressure gauge.
9. Re-assemble the boiler in reverse order.
10. Check the operation of the boiler. Refer to Frame 52.

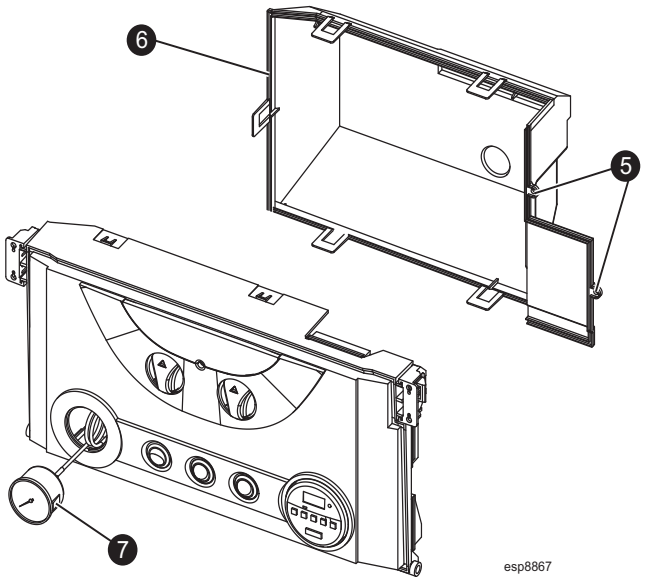

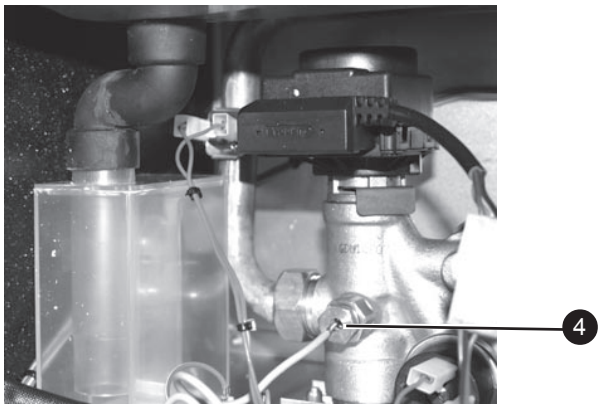

70 SAFETY RELIEF VALVE REPLACEMENT

1. Refer to Frame 52.
2. Drain the boiler CH circuit. Refer to Frame 72.
3. Unscrew the nut securing the pipe to the pump outlet.
4. Disconnect the electrical connections.
5. Withdraw the pump clip.
6. Remove screw securing pump through bottom panel.
7. Pull pump forward to disengage from manifold and remove.
8. Unscrew the discharge pipe union nut.
9. Unscrew the safety valve retaining screw.
10. Pull the safety valve upwards to remove.
11. Fit the new safety valve and tighten the securing screw.
12. Reassemble in reverse order.
13. Refill the boiler. Refer to Frame 32.
14. Check operation of the boiler. Refer to Frame 52.

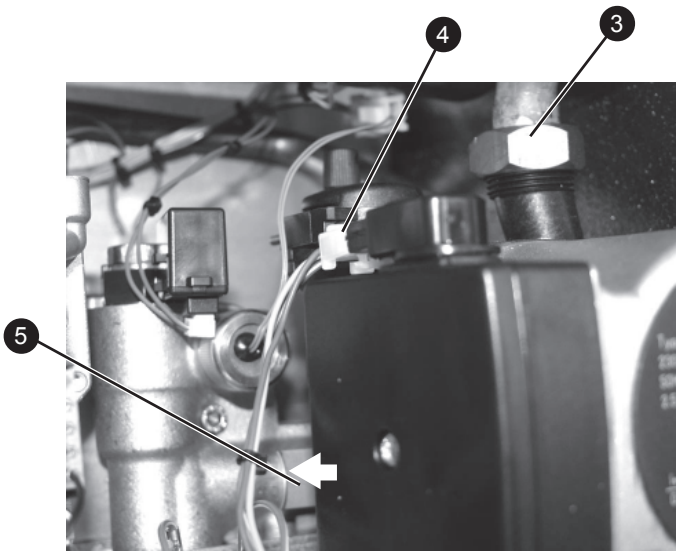

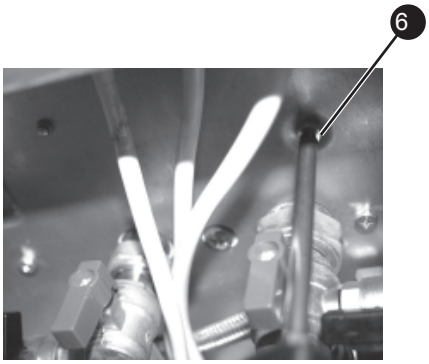

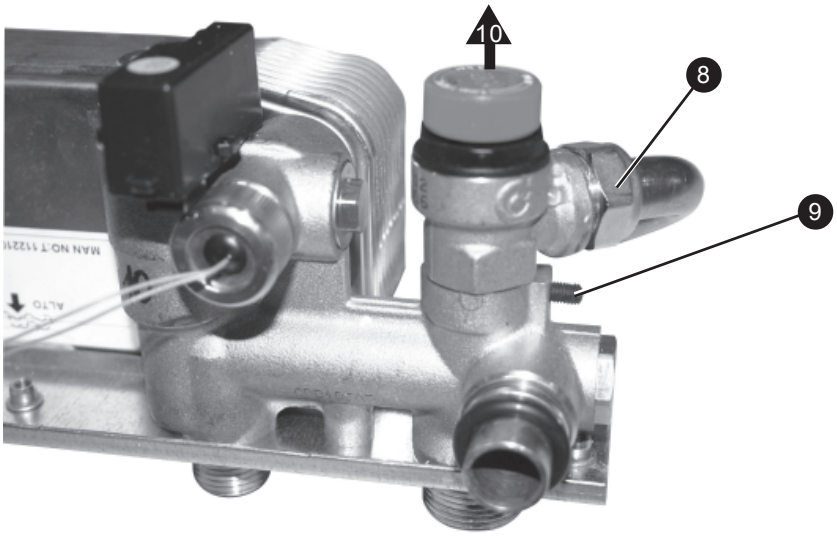

71 AUTOMATIC AIR VENT REPLACEMENT

1. Refer to Frame 52.
2. Drain the boiler. Refer to frame 72.
3. Remove the turret from the boiler. Refer to frame 24.
4. Release the silicon tubing from the sample point.
5. Release the electrical connections from the spark generator.
6. Remove the M5 x 10 screw retaining the top flue manifold casting.
7. Remove the top flue manifold casting.
8. Remove the fan from the boiler. Refer to Frame 47.
9. Remove the burner from the heat exchanger. Refer to Frame 48.
10. Unscrew the air vent from its heat exchanger mount and replace.
11. Re assemble the boiler in reverse order.

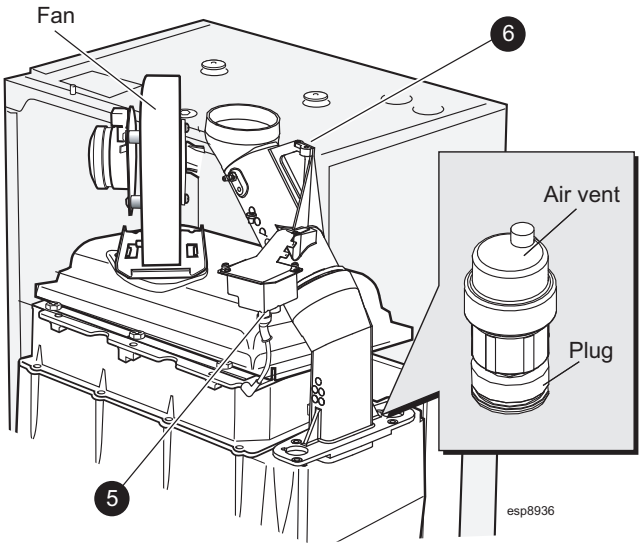

12. Refill the boiler. Refer to frame 32. Check for leaks around the new air vent joint.
13. Check the operation of the boiler. Refer to frame 52.

72 DRAINING THE BOILER

1. Refer to frame 52
2. Close all the water isolating (CH and DHW) valves on the boiler inlet.
3. **To drain the central heating circuit**:
   a. Attach a length of hose to the drain point and open the drain valve.
4. **To drain the domestic hot water circuit**. As there is no direct drain for the domestic hot water circuit, depending on the location of the boiler, opening the lowest hot water tap may drain this circuit. However it must be noted that some residual water will be experienced during replacement of components.
5. **After replacing any component on the boiler, close the drain valve, remove the hose and open all system isolating valves (re-pressurise as appropriate with filling loop provided) before proceeding to check operation of the boiler.**
6. Check operation of the boiler. Refer to Frame 52.

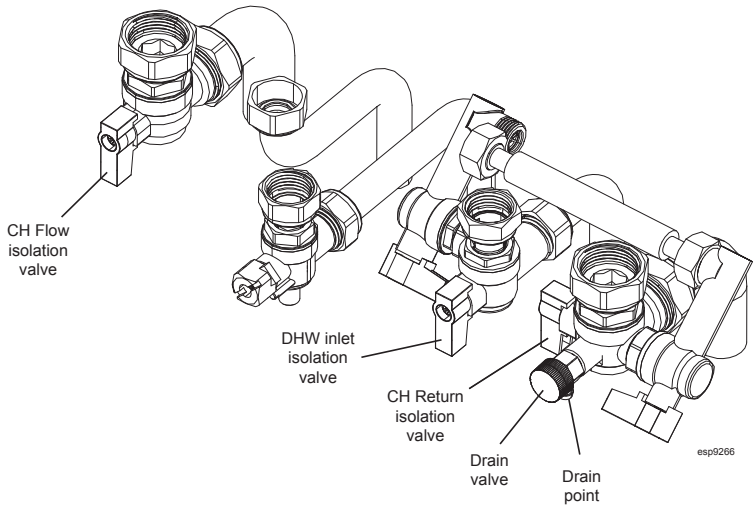

73 DIVERTER VALVE INTERNAL PARTS REPLACEMENT

1. Refer to Frame 52.
2. Swing the control box down into the servicing position. Refer to Frame 46.
3. Drain the boiler. Refer to Frame 72.
4. Remove the diverter valve actuator head. Refer to Frame 62.
5. Remove the water pressure switch. Refer to Frame 77.
6. Remove flow pipe union nut.
7. Unscrew the pressure gauge connection.
8. Remove the allen screw retaining the divertor brass housing.
9. Remove the two union connections to the CH flow and the DHW flow at the underside of the boiler.
10. Lift the divertor brass housing and remove.
11. Unscrew the top and bottom connections to access the internal parts.
12. Fit the new valve mechanisms ensuring the correct fit of the pin.
13. Reassemble in reverse order.
14. Refill the boiler. Refer to Frame 32.
15. Check operation of the boiler. Refer to Frame 52.

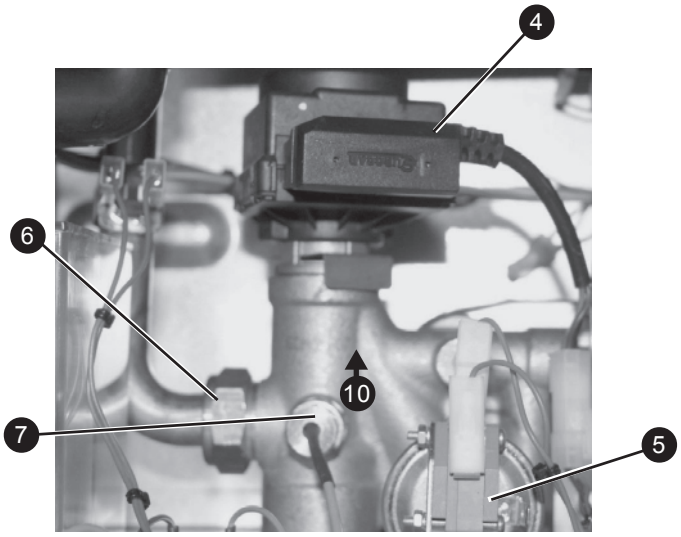

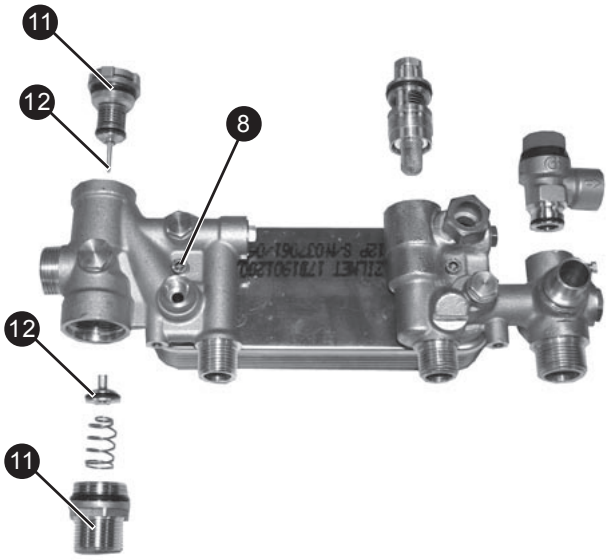

74 DHW FLOW SWITCH REPLACEMENT

1. Refer to frame 52.
2. Swing the control box down into the servicing position. Refer to Frame 46.
3. Unplug the electrical connection.
4. Carefully pull the switch upwards to disengage.
5. Fit the new switch and replace the electrical plug connection.
6. Re-assemble in reverse order
7. Check operation of the boiler. Refer to Frame 52.

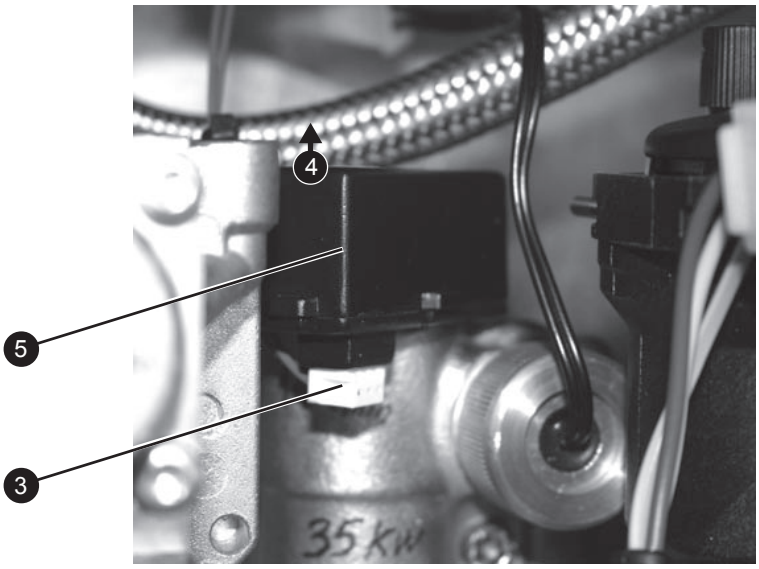

75 DHW FILTER REPLACEMENT

1. Refer to frame 52.
2. Swing the control box down into the servicing position. Refer to Frame 46.
3. Drain the boiler. Refer to Frame 72.
4. Remove the DHW flow switch. Refer to Frame 74.
5. Unscrew the DHW filter housing from the main brass body.
6. Remove and fit new filter.
7. Re-assemble in reverse order.
8. Refill the boiler. Refer to Frame 32.
9. Check operation of the boiler. Refer to Frame 52.

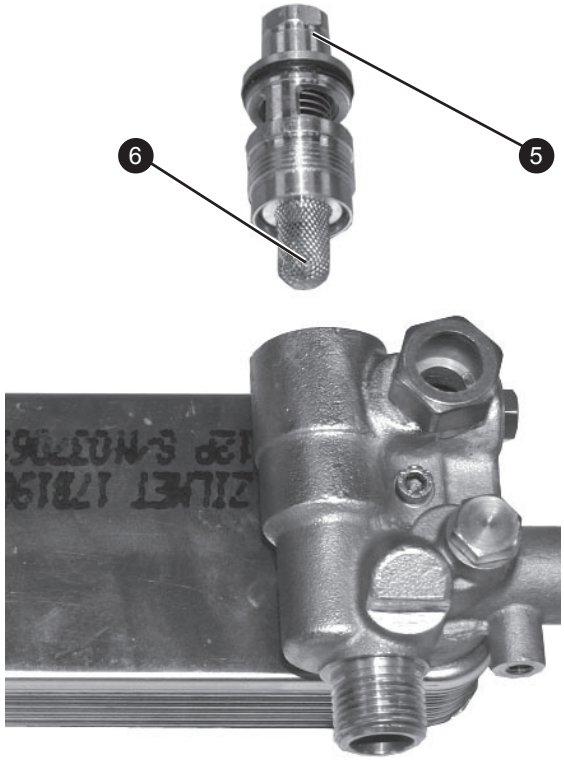

76 FLOW LIMITER REPLACEMENT

1. Refer to frame 52.
2. Isolate the mains cold water supply to the boiler.
3. Drain the boiler DHW circuit. Refer to Frame 72.
4. Unscrew the three union connections at the DHW isolating valve and remove the valve.
5. Remove the circlip retaining the flow limiter.
6. Using a suitable tool, pull the flow limiter from the valve body.
7. Fit the new flow limiter and reassemble in reverse order.
8. Refill the boiler. Refer to Frame 32.
9. Check operation of the boiler. Refer to Frame 52.

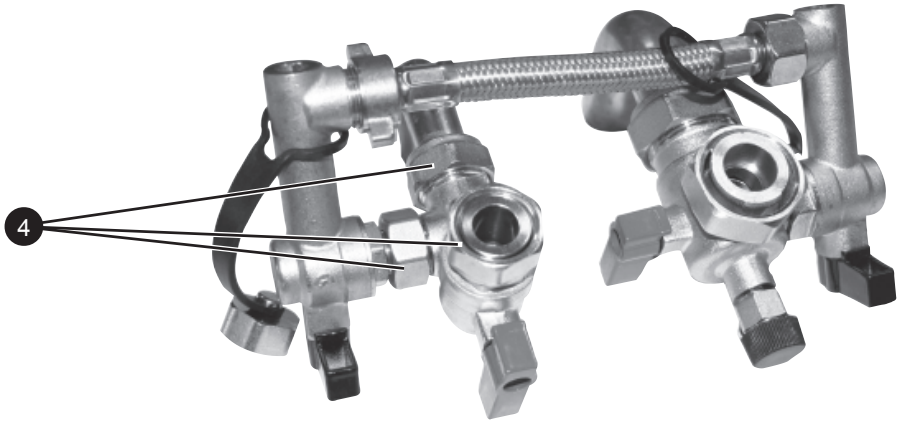

77 WATER PRESSURE SWITCH REPLACEMENT

1. Refer to frame 52.
2. Swing the control box down into the servicing position. Refer to Frame 46.
3. Drain the boiler CH circuit. Refer to Frame 72.
4. Pull off the two electrical connections from the switch.
5. Pull off the earth connection.
6. Unscrew the water pressure switch.
7. Re-assemble in reverse order.
8. Refill the boiler. Refer to Frame 32.
9. Check operation of the boiler. Refer to Frame 52.

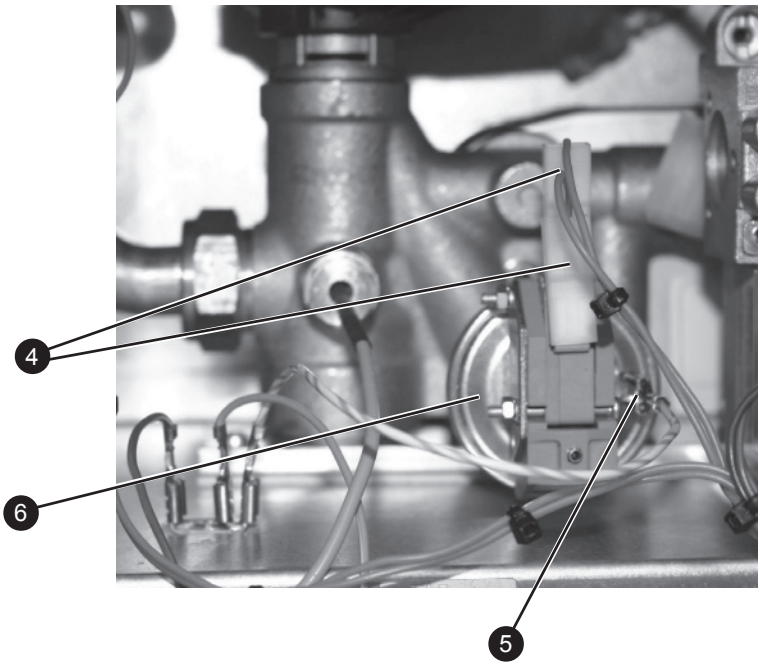

78 DHW PLATE HEAT EXCHANGER REPLACEMENT

1. Refer to Frame 52.
2. Swing the control box down into the servicing position. Refer to Frame 46.
3. Drain the boiler. Refer to Frame 72.
4. Remove divertor valve actuator. Refer to Frame 62.
5. Remove gas valve. Refer to Frame 61.
6. Remove the 2 allen screws securing the plate heat exchanger to the brass housings.
7. Manoeuvre the plate heat exchanger out of the boiler.
8. Fit the new plate heat exchanger, using the new o-rings supplied.
9. Reassemble in reverse order.
10. Refill the boiler. Refer to Frame 32.
11. Check operation of the boiler. Refer to Frame 52.

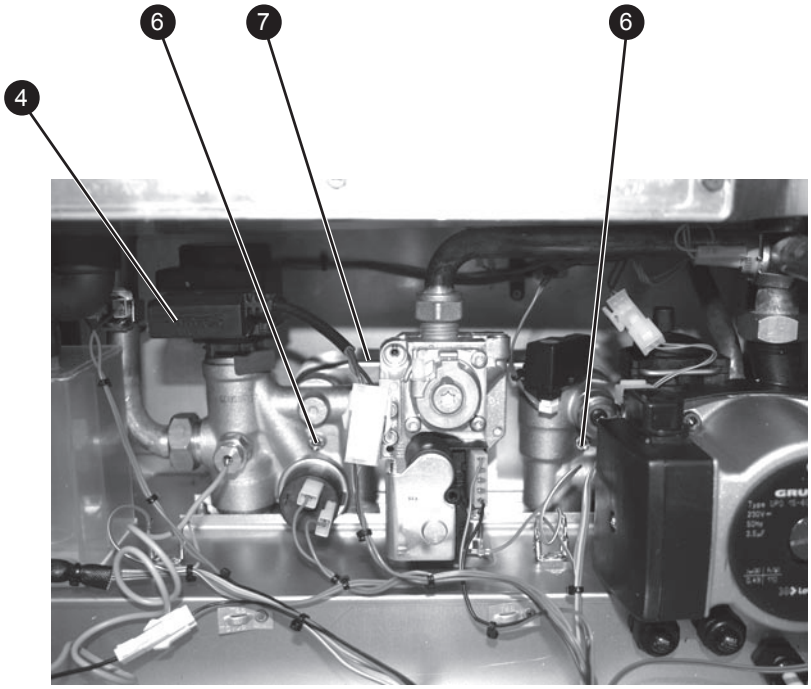

79 PUMP HEAD REPLACEMENT

1. Refer to Frame 52.
2. Drain the boiler CH circuit. Refer to Frame 72.
3. Swing the control box down into the servicing position. Refer to Frame 46.
4. Disconnect the electrical lead from the pump.
5. Remove the 4 Allen screws retaining the pump head.
6. Remove the pump head.
7. Fit the new pump head.
8. Reassemble in reverse order.
9. Refill the boiler. Refer to Frame 32.
10. Check operation of the boiler. Refer to Frame 52.

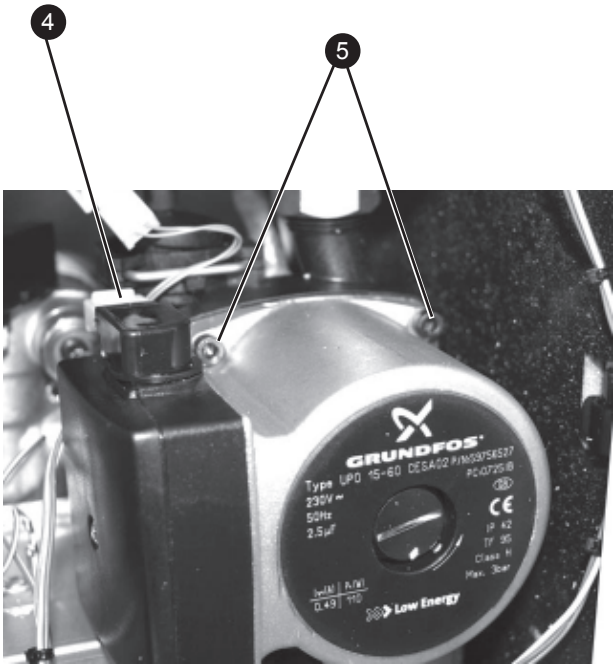

80 HEAT ENGINE REPLACEMENT

Refer also to Frame 8 - 'Boiler Exploded View'.

IMPORTANT

Before starting the removal procedure, protect the gas and electrical controls with a waterproof sheet or plastic bag.

1. Refer to Frame 52.

2. Drain the boiler. Refer to Frame 72.

3. Swing the control box down into the servicing position. Refer to Frame 46.

4. Remove the fan / venturi assembly and place on one side. Refer to Frame 47.

5. Remove the burner and place on one side. Refer to Frame 56.

6. Remove the ignition and detection electrodes. Refer to Frames 58 & 59.

7. Remove the spark generator. Refer to Frame 60.

8. Release the flue from the turret. Refer to Frame 24.

9. Remove the turret from the boiler. Refer to Frame 24.

10. Release the silicone tubing from the sampling point.

11. Release the electrical connection to the dry fire thermistor.

12. Remove the M5 x 10 screw retaining the top flue manifold casting.

13. Remove the top casting of the flue manifold from the appliance.

14. Remove the automatic air vent. Refer to Frame 71.

15. Undo the M5 x 12 screws securing the bottom flue manifold casting and remove.

16. Remove the M5 screw and remove the return pipe securing bracket by sliding forwards.

17. Remove the overheat thermostat and the control thermistor. Refer to Frame 57.

18. Unscrew the brass union connection to release the flow pipe.

19. Remove the condensate trap/ siphon. Refer to Frame 64.

20. Loosen the 2 bottom M5 screws securing the inter panel to the back panel and remove the 2 upper M5 screws.

21. Slide the heat exchanger and inter panel assembly upward to disengage and remove from the casing, complete with the flow pipe.

22. Remove the 2 M6 countersunk screws, remove the inter panel and transfer to the new heat exchanger.

23. Remove the M5 screw and remove the flow pipe securing bracket.

24. Remove the flow pipe and transfer to the new heat exchanger.

25. Reassemble in reverse order, replacing gaskets or seals if any sign of damage or deterioration is evident.

Note. *The heat exchanger is supplied with new combustion chamber insulation boards. These should be fitted (refer to Frame 63 before the burner and fan / venturi assembly and before the ignition and detection electrodes are replaced).*

26. Refill the boiler. Refer to Frame 32.

27. Check operation of the boiler. Refer to Frame 52.

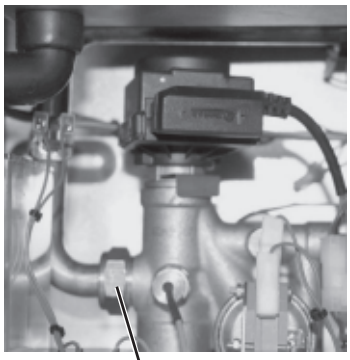

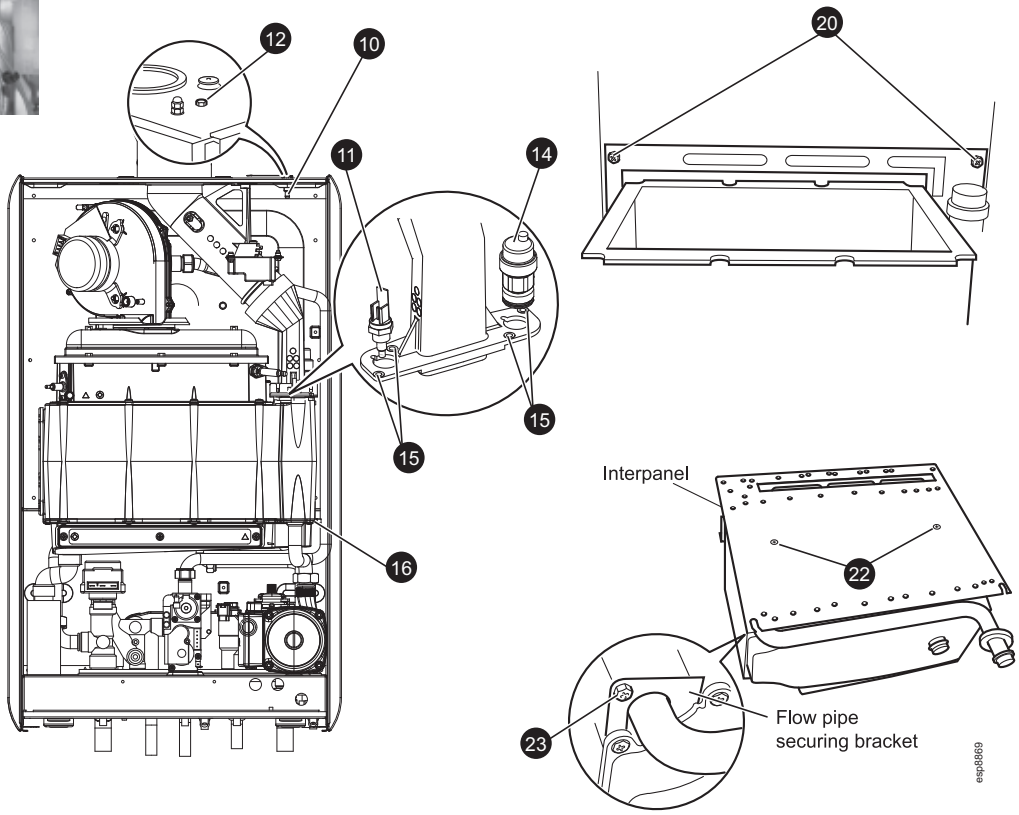

81 EXPANSION VESSEL CHARGING

IF REQUIRED THE EXPANSION VESSEL PRESSURE CAN BE RECHARGED BY USING THE CONNECTION ACCESSIBLE THROUGH THE BACK PANEL.

The initial charge of the expansion vessel should be 1.0 bar before filling the system.

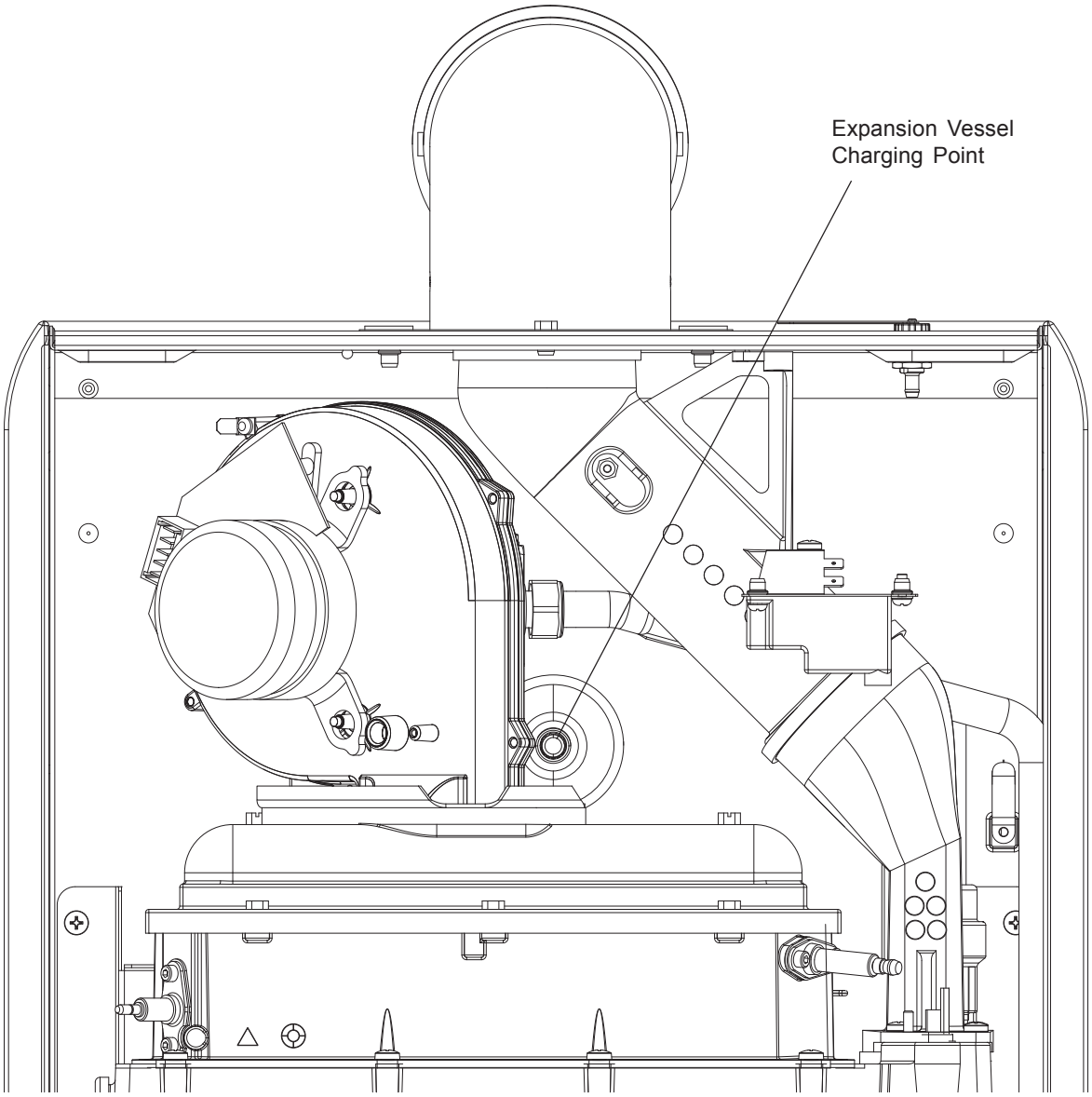

82 EXPANSION VESSEL REPLACEMENT - SIDE FLUE APPLICATION

SIDE FLUE APPLICATION AND 450MM ACCESS AVAILABLE ABOVE THE BOILER

1. Refer to Frame 52.
2. Swing the control panel down into the servicing position. Refer to Frame 46.
3. Drain the boiler. Refer to Frame 72.
4. Remove the two screws retaining the expansion vessel bracket at top rear of the boiler.
5. Unscrew the union nut on the vessel water connection pipe.
6. Unscrew the extension nut holding the expansion vessel in place
7. Lift and remove the expansion vessel.
8. Fit the new expansion vessel.
9. Re-assemble in reverse order
10. Refill the boiler. Refer to Frame 32.
11. Check operation of the boiler. Refer to Frame 52.

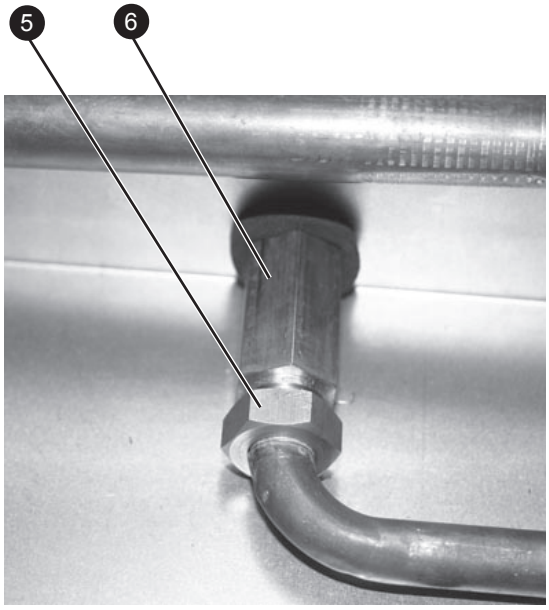

83 EXPANSION VESSEL REPLACEMENT - REAR FLUE APPLICATION

REAR FLUE APPLICATION OR 450MM ACCESS ABOVE THE BOILER NOT AVAILABLE

1. Refer to Frame 52.
2. Swing the control panel down into the servicing position. Refer to Frame 46.
3. Drain the boiler. Refer to Frame 72.
4. Unscrew all of the gas and water connection unions on the boiler side of the valves (including the condensate connection and the pressure relief valve pipe).
5. Remove the screw from the turret clamp and remove the clamp.
6. Remove the turret.
7. Lift the complete boiler from the wall mounting bracket and place on a flat surface.
8. Remove the bracket retaining the expansion vessel at the top rear of the boiler.
9. Unscrew the union nut on the vessel water connection pipe.
10. Unscrew the extension nut holding the expansion vessel in place.
11. Remove the expansion vessel.
12. Fit the new expansion vessel.
13. Reassemble in reverse order
14. Refill the boiler. Refer to Frame 32.
15. Check operation of the boiler. Refer to Frame 52.

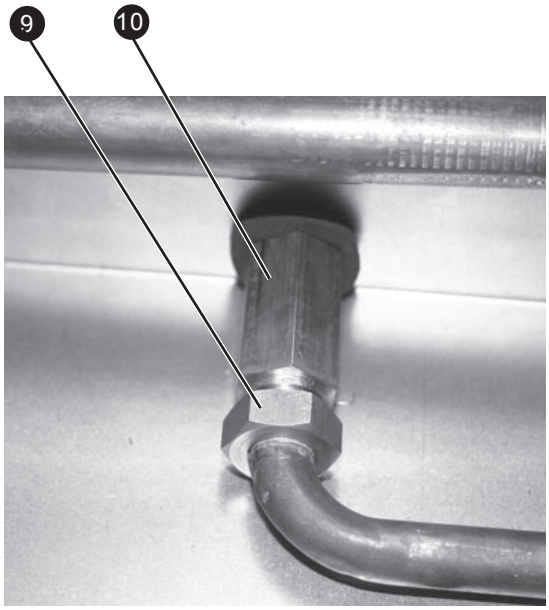

84 FAULT FINDING CHART MAIN MENU

In order to assist fault finding the boiler has an LED diagnostic display. The key to the display codes is as follows:

ALTERNATING 'L' 'F'	GO TO FRAME 85
ALTERNATING 'L' 'E'	GO TO FRAME 86 OR 88
ALTERNATING 'L' 'A'	GO TO FRAME 87 OR 88
ALTERNATING 'L' '8'	GO TO FRAME 89
ALTERNATING 'H' '1'	GO TO FRAME 90
ALTERNATING 'H' '2'	GO TO FRAME 91
ALTERNATING 'H' '3'	GO TO FRAME 92
ALTERNATING 'H' '4'	GO TO FRAME 93
ALTERNATING 'H' 'F'	GO TO FRAME 94
ALTERNATING 'H' 'n'	GO TO FRAME 95
ALTERNATING 'H' 'E'	GO TO FRAME 86
ALTERNATING 'H9'	GO TO FRAME 93
ALTERNATING 'L9'	GO TO FRAME 93

85 L.....F.....(FLAME DETECTION ERROR)

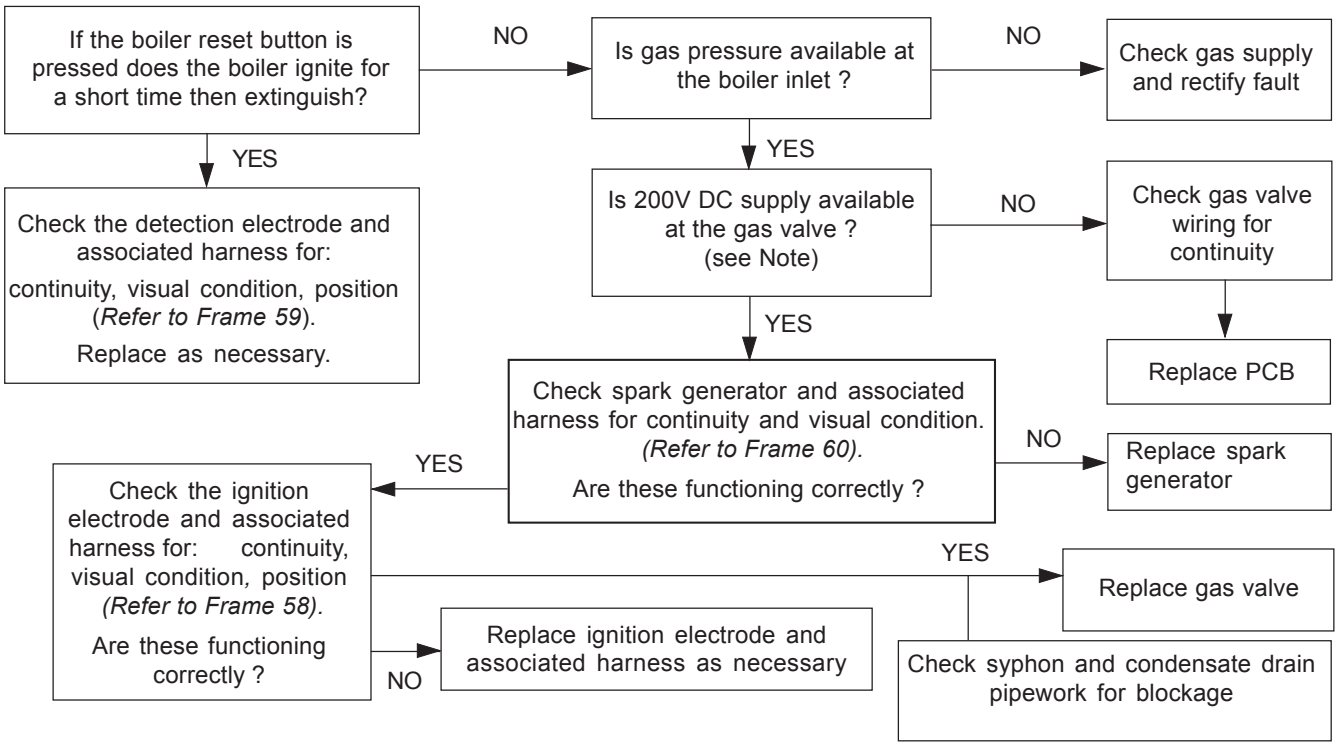

Note. *Due to the wave form of the rectified voltage, the reading will vary depending on the type of meter used to measure the value (some may measure the possible peak voltage of 339V). In general terms a reading greater than 150V indicates that the correct voltage is supplied to the gas valve. As an alternative to a meter, a mains voltage checking device may be used. E.g. an electrical screwdriver or mains tester.*

86 L.....E..... or H.....E..... (PCB ERROR)

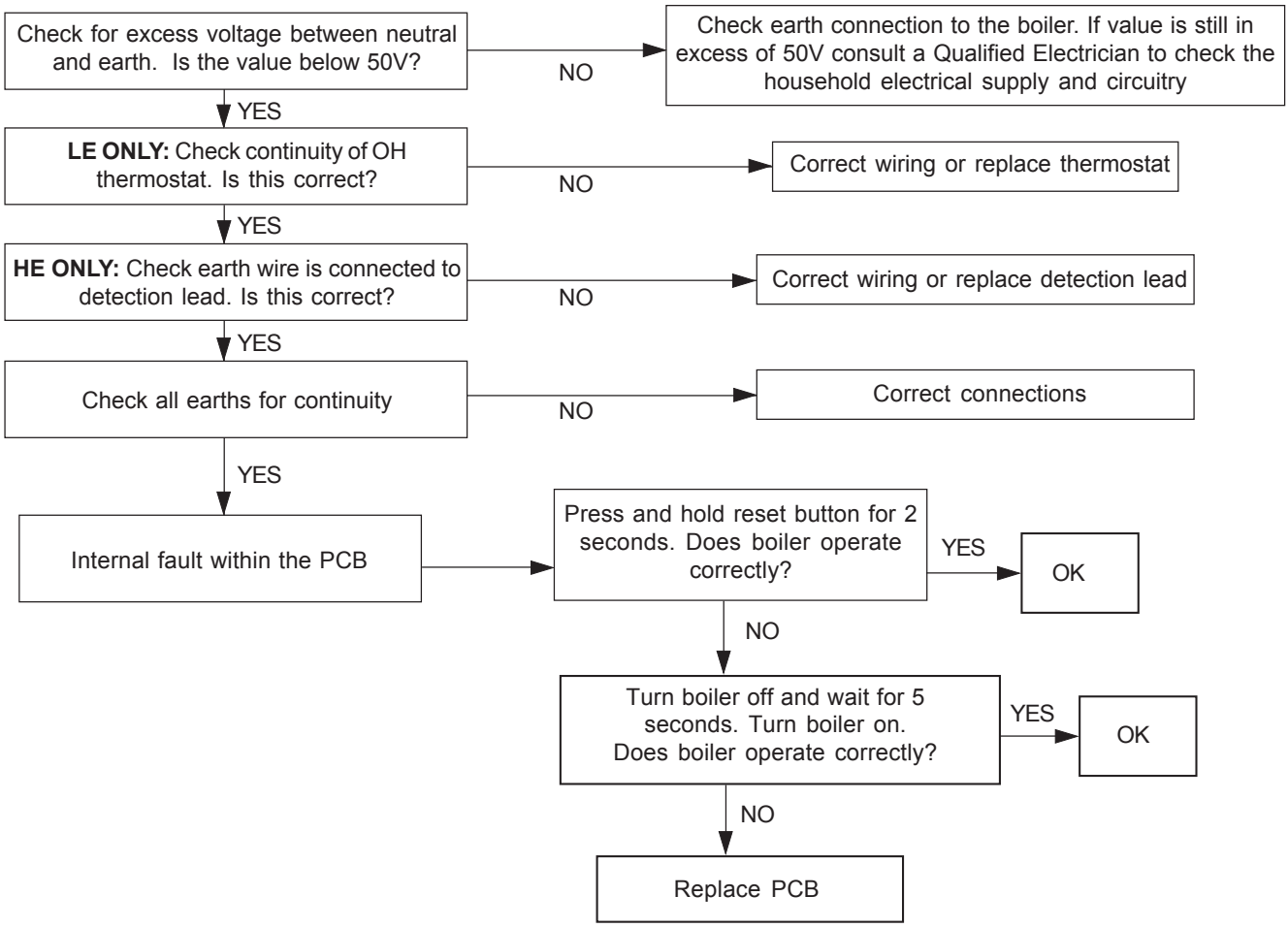

87 L.....A..... (OVERHEAT ERROR)

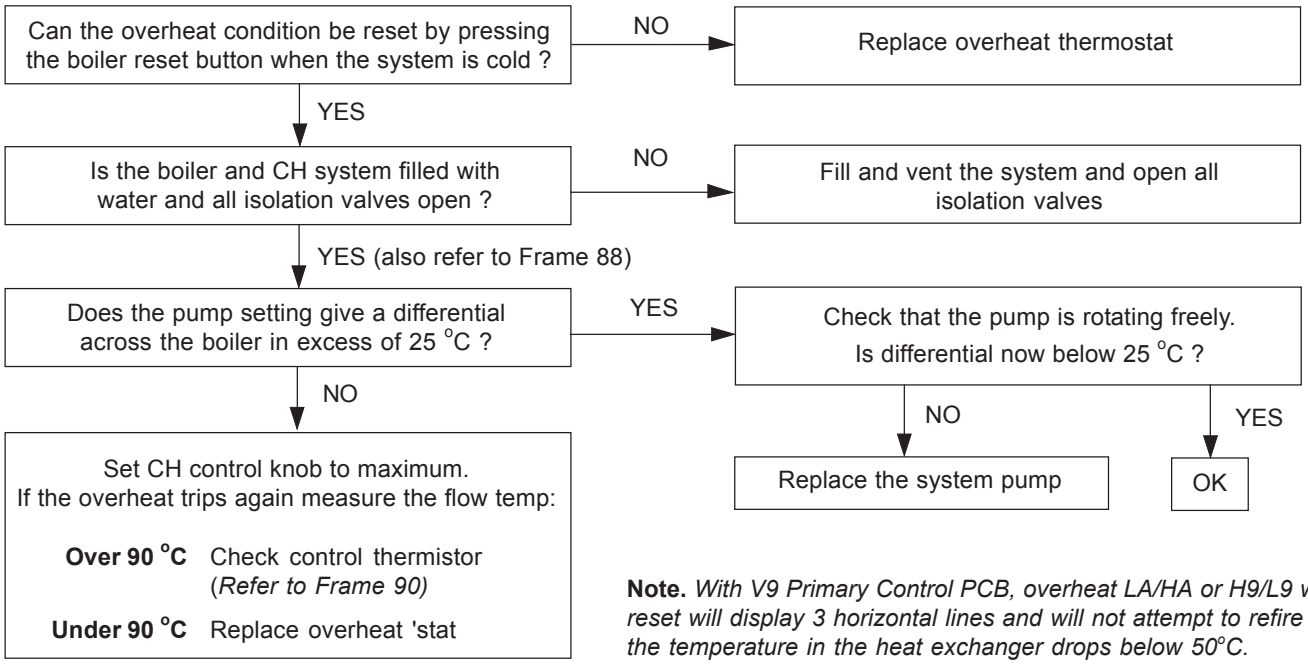

Note. *With V9 Primary Control PCB, overheat LA/HA or H9/L9 when reset will display 3 horizontal lines and will not attempt to refire until the temperature in the heat exchanger drops below 50°C.*

88 L.....E..... OR L.....A..... (WATER PRESSURE SWITCH)

Note.

LE occurs when boiler is cold.
LA occurs when boiler is hot.

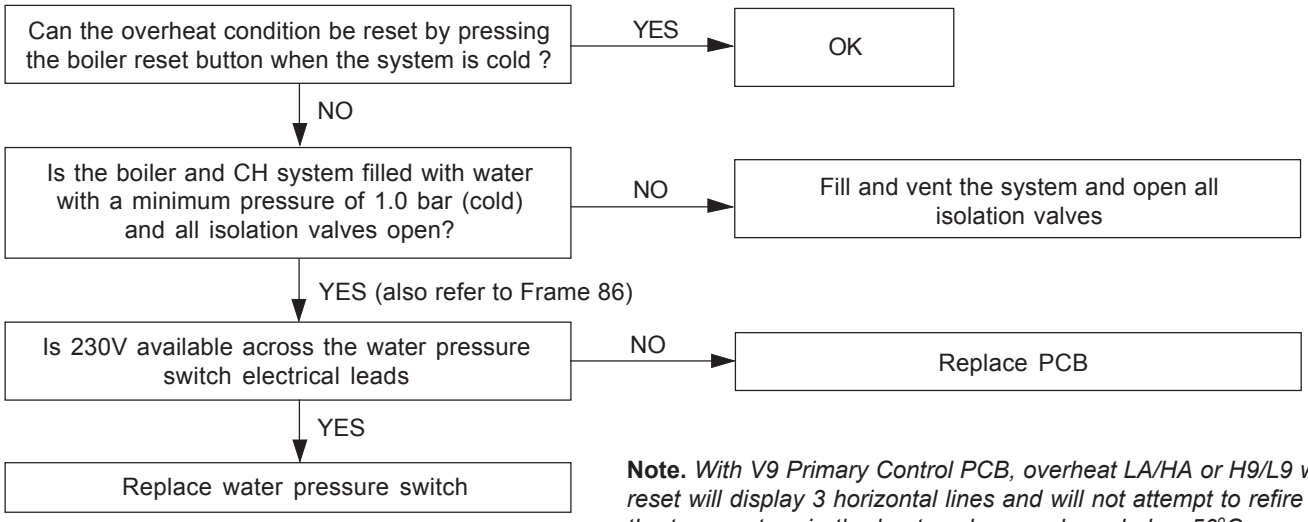

Note. *With V9 Primary Control PCB, overheat LA/HA or H9/L9 when reset will display 3 horizontal lines and will not attempt to refire until the temperature in the heat exchanger drops below 50°C.*

89 L....8..... (FAN ERROR)

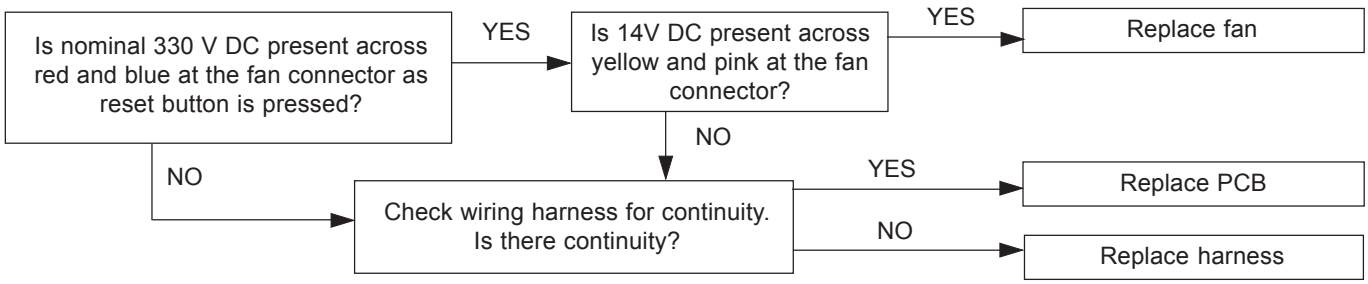

90 H.....1..... (CONTROL THERMISTOR [FLOW] ERROR)

Remove the boiler control thermistor from the CH flow pipe and disconnect thermistor wires.

↓

Check resistance using a suitable multimeter connected across the thermistor's terminal pins

At 25 °C	expect	9,700 - 10,300	Ohms
At 60 °C	expect	2,400 - 2,600	Ohms
At 85 °C	expect	1,000 - 1,100	Ohms

↓

Are the thermistor values correct ?

- NO → Replace the thermistor
- YES ↓

Is there continuity between the PCB and the thermistor ?

- YES → Replace PCB
- NO → Check and replace wiring as necessary

91 H.....2..... (CONTROL THERMISTOR [RETURN] ERROR)

Remove the boiler return thermistor from the CH return pipe.

↓

Check resistance using a suitable multimeter connected across the thermistor's terminal pins

At 25 °C	expect	9,700 - 10,300	Ohms
At 60 °C	expect	2,400 - 2,600	Ohms
At 85 °C	expect	1,000 - 1,100	Ohms

↓

Are the thermistor values correct ?

- NO → Replace the thermistor
- YES ↓

Is there continuity between the PCB and the thermistor ?

- YES → Replace PCB
- NO → Check and replace wiring as necessary

92 H.....3..... (DHW THERMISTOR ERROR)

Remove the boiler DHW thermistor from the plate heat exchanger and disconnect thermistor wires.

↓

Check resistance using a suitable multimeter connected across the thermistor's terminal pins

At 25 °C	expect	9,700 - 10,300	Ohms
At 60 °C	expect	2,400 - 2,600	Ohms
At 85 °C	expect	1,000 - 1,100	Ohms

↓

Are the thermistor values correct ?

- NO → Replace the thermistor
- YES ↓

Is there continuity between the PCB and the thermistor ?

- YES → Replace PCB
- NO → Check and replace wiring as necessary

93 H.....4.... (DRY FIRE THERMISTOR ERROR)

Can the fault condition be reset by switching off the mains supply to the boiler ?

NO

Check wiring for continuity from the PCB to the dry fire thermistor

Check resistance using a suitable multimeter connected across the thermistor's terminal pins

At 25 °C	expect	9,700 - 10,300	Ohms
At 60 °C	expect	2,400 - 2,600	Ohms
At 85 °C	expect	1,000 - 1,100	Ohms

Are thermistor values correct ?

YES → Replace PCB

NO → Replace thermistor

H9/L9 (HEAT EXCHANGER OVERHEAT)

Is the system filled and vented and all isolation valves open ?

Is the pump operating correctly? Ensure flow through system.

NO → Fill and vent the system and open all isolating valves

YES

Check resistance using a suitable multimeter connected across the dry fire thermistor's terminal pins

At 25 °C	expect	9,700 - 10,300	Ohms
At 60 °C	expect	2,400 - 2,600	Ohms
At 85 °C	expect	1,000 - 1,100	Ohms

Are thermistor values correct ?

YES → Inspect heat exchanger for blockage or damage in the flueways. Clean or replace as necessary

NO → Replace thermistor

Note. *With V9 Primary Control PCB, overheat LA/HA or H9/L9 when reset will display 3 horizontal lines and will not attempt to refire until the temperature in the heat exchanger drops below 50°C.*

94 H.....F..... (FLAME DETECTION ERROR)

Remove flame detection electrode terminal from PCB

Is there continuity between the 2 terminal pins ?

NO → Replace PCB

YES → Replace flame detection electrode

95 H.....n..... (PHASE REVERSAL ERROR)

Check wiring to the boiler for reversed live and neutral

SHORT LIST OF PARTS

The following are parts commonly required due to damage or expendability. Their failure or absence is likely to affect safety or performance of this appliance.

The list is extracted from the British Gas List of Parts, which contains all available spare parts.

The full list is held by British Gas Services, Ideal Stelrad Group distributors and merchants.

When ordering spares please quote:

1. Boiler model
2. Appliance G.C. No.
3. Description.
4. Quantity.
5. Product number.

When replacing any part on this appliance use only spare parts that you can be assured conform to the safety and performance specification that we require. Do not use reconditioned or copy parts that have not been clearly authorised by Ideal Boilers.

Key No.	G.C. Part No.	Description		Product Number
1.	H58074	Front Casing Panel		174782
2.	H58075	Front Casing Door		174783
8.	E67489	Burner		170905
9.	H07660	Combustion Chamber Insulation		173520
11.	E67492	Injector & Housing	24, 30	170908
11.	H07770	Injector & Housing	35	173520
13.	E85097	Fan	24, 30	172625
13.	H07771	Fan	35	173525
14.	H15912	Automatic Air Vent Kit (Heat Exchanger)		172668
16.	H58082	Gas Valve		174789
20.	H58084	Control Thermistor (Flow / Return)		174790
21.	H58086	Overheat Thermostat		174791
22.	H07664	Ignition Electrode		173528
23.	H07665	Flame sensing electrode		173529
24.	H58088	Kit – Trap and Seal		174793
25.	H58091	User Control PCB		174795
26.	H49852	PCB Primary Controls		174486
27.	H58092	Mains Switch		174796
28.	H58098	Pre-Heat & Winter/Summer Switch		174797
30.	H58101	Turret Gasket		174806
31.	H07731	Spark Generator		173538
32.	H07790	Ignition Lead		173510
35.	H58130	Pressure Relief Valve Kit		174811
36.	H58131	Expansion Vessel		174812
38.	H46712	Pressure Gauge		173892
39.	E69403	DHW Thermistor		170996
40.	H58165	Diverter Valve Head		174813
41.	H58198	Diverter Valve Cartridge		174814
43.	H58199	Pump		174817
45.	H58201	Plate Heat Exchanger	24	174820
45.	H58202	Plate Heat Exchanger	30	174821
45.	H58203	Plate Heat Exchanger	35	174822
46.	H29018	Dry Fire Thermistor		174087
47.	H58208	Water Pressure Switch		174755
48.	H58211	Reed Switch		174819
49.	H58220	REED Switch Cartridge & Filter		174844
50.	H58225	Air Vent (Pump)		174894
51.	H58227	Filling Loop		174825
59.	H58254	Detection Lead		174787
69.	H58273	Control Box Clip Kit		174826
86.	E78200	Burner Earth Pin		171845
87.	H58310	Heat Engine Gasket Kit		174877
90.	E67519	Fuse - PCB Kit		170931

96 SHORT LIST

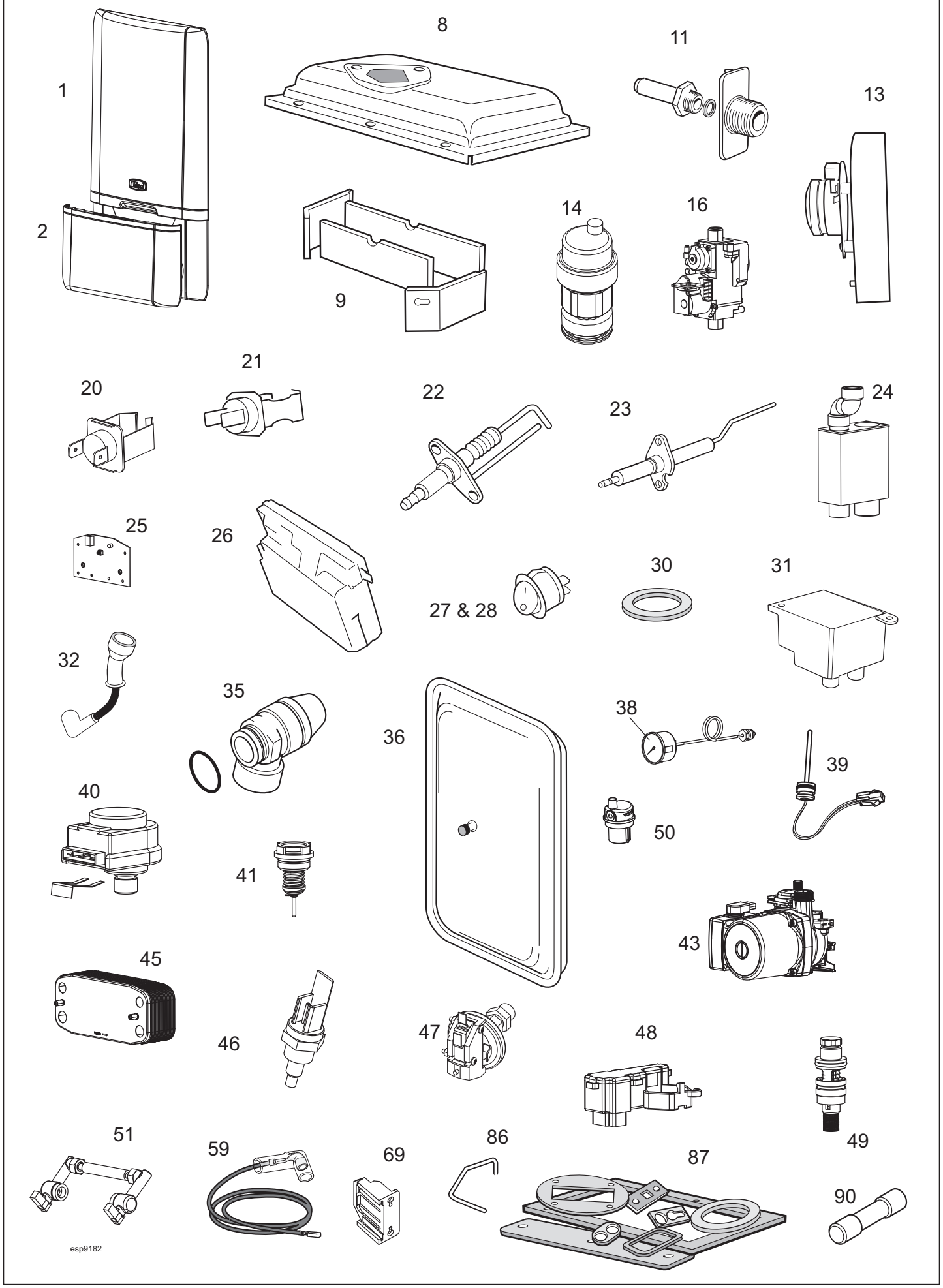

97 CONTROLS ASSEMBLY

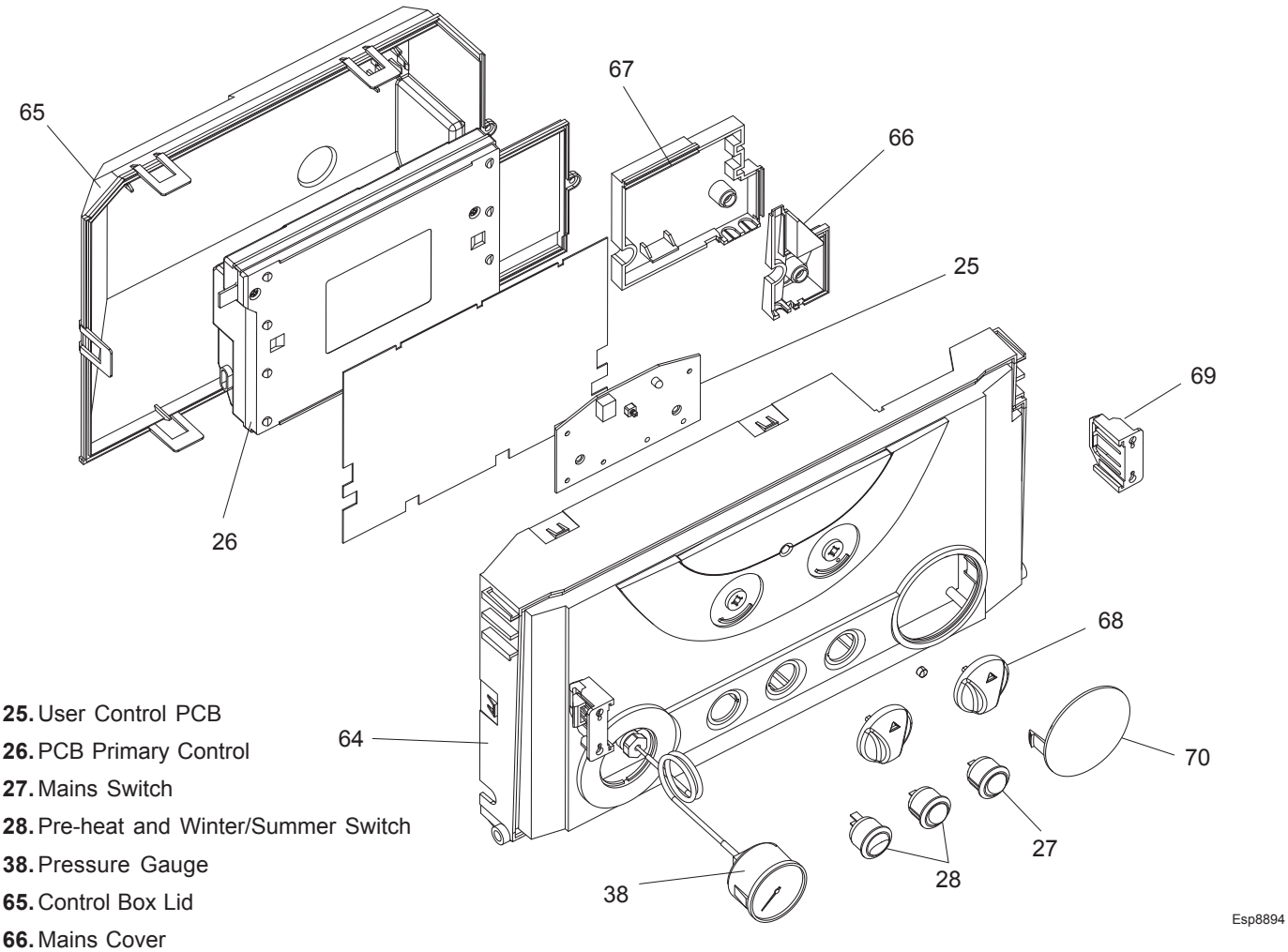

25. User Control PCB
26. PCB Primary Control
27. Mains Switch
28. Pre-heat and Winter/Summer Switch
38. Pressure Gauge
65. Control Box Lid
66. Mains Cover
67. Controls Cover
68. Potentiometer Knob
69. Control Box Clip
70. Programmer Insert

98 BURNER ASSEMBLY

8. Burner assembly with screws and gasket.

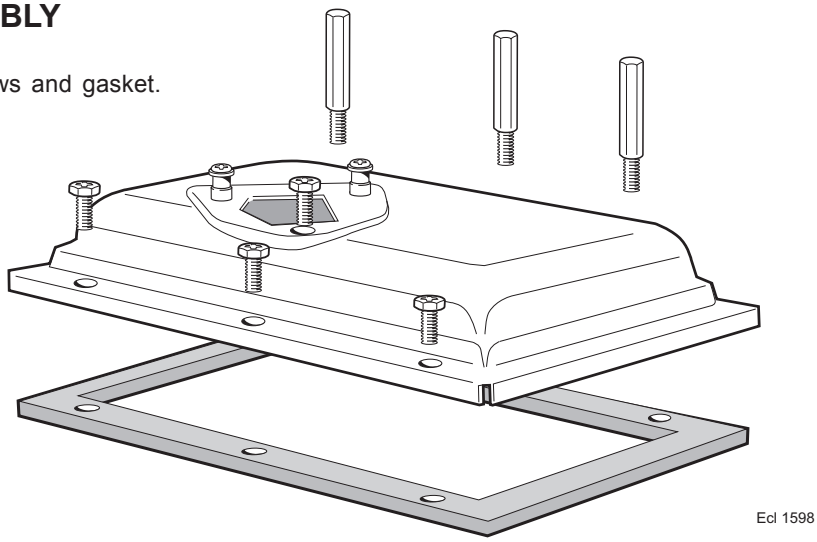

NOTES

NOTES

INSTALLER NOTIFICATION GUIDELINES

IT IS A REQUIREMENT OF CORGI MEMBERSHIP TO REGISTER EVERY GAS APPLIANCE

In addition a change to Building Regulations (England and Wales) requires the installer to notify when installing a heating appliance, as from 1st April 2005.

Install and commission this appliance to manufacturers' instructions

↓

Complete the Benchmark Checklist

↓

Choose Buildings Regulations notification route

Competent Person's SELF CERTIFICATION SCHEME

If you notify via CORGI Scheme, CORGI will then notify the relevant Local Authority Building Control (LABC) scheme on members behalf

↓

Scheme members only: Call CORGI on 0870 88 88 777 or log onto: www.corgi-notify.com within 10 days

↓

You must ensure that the notification number issued by CORGI is written onto the Benchmark Checklist

↓

CORGI will record the data and will send a certificate of compliance to the property

BUILDING CONTROL

Contact your relevant Local Authority Building Control (LABC) who will arrange an inspection or contact a government approved inspector

↓

LABC will record the data and will issue a certificate of compliance

IT IS A CONDITION OF THE MANUFACTURERS WARRANTY THAT THE BENCHMARK COMMISSIONING CHECKLIST IS FULLY COMPLETED AND LEFT WITH THE APPLIANCE

GAS BOILER SYSTEM COMMISSIONING CHECKLIST

This Commissioning Checklist is to be completed in full by the competent person who commissioned the boiler as a means of demonstrating compliance with the appropriate Building Regulations and then handed to the customer to keep for future reference.

Failure to install and commission this equipment to the manufacturer's instructions may invalidate the warranty but does not affect statutory rights.

Customer Name _____ Telephone Number _____

Address _____

Boiler Make and Model _____

Boiler Serial Number

Commissioned by *(print name)* _____ CORGI ID Number _____

Company Name _____ Telephone Number _____

Company Address _____

Commissioning Date _____

To be completed by the customer on receipt of a Building Regulations Compliance Certicate *:

Building Regulations Notification Number *(if applicable)*

CONTROLS Tick the appropriate boxes

Time and Temperature Control to Heating	Room Thermostat and Programmer/Timer ☐	Programmable Room Thermostat ☐	Load/Weather Compensation ☐	Optimum Start Control ☐
Time and Temperature Control to Hot Water	Cylinder Thermostat and Programmer/Timer ☐			Combination Boiler ☐
Heating Zone Valves	Fitted ☐			Not Required ☐
Hot Water Zone Valves	Fitted ☐			Not Required ☐
Thermostatic Radiator Valves	Fitted ☐			Not Required ☐
Automatic Bypass to System	Fitted ☐			Not Required ☐
Boiler Interlock				Provided ☐

ALL SYSTEMS

The system has been flushed and cleaned in accordance with BS7593 and boiler manufacturer's instructions Yes ☐

What system cleaner was used?

What inhibitor was used? Quantity _____ *litres*

CENTRAL HEATING MODE Measure and Record:

Gas Rate _____ m^3/hr OR _____ ft^3/hr

Burner Operating Pressure (if applicable) _____ mbar OR Gas Inlet Pressure _____ mbar

Central Heating Flow Temperature _____ °C

Central Heating Return Temperature _____ °C

COMBINATION BOILERS ONLY

Is the installation in a hard water area (above 200ppm)? Yes ☐ No ☐

If yes, has a water scale reducer been fitted? Yes ☐ No ☐

What type of scale reducer has been fitted?

DOMESTIC HOT WATER MODE Measure and Record:

Gas Rate _____ m^3/hr OR _____ ft^3/hr

Burner Operating Pressure (at maximum rate) _____ mbar OR Gas Inlet Pressure (at maxiumum rate) _____ mbar

Cold Water Inlet Temperature _____ °C

Hot water has been checked at all outlets Yes ☐ Temperature _____ °C

Water Flow Rate _____ *l/min*

CONDENSING BOILERS ONLY

The condensate drain has been installed in accordance with the manufacturer's instructions and/or BS5546/BS6798 Yes ☐

ALL INSTALLATIONS

If required by the manufacturer, record the following CO_2 _____ % OR CO _____ *ppm* OR CO/CO_2 Ratio _____

The heating and hot water system complies with the appropriate Building Regulations Yes ☐

The boiler and associated products have been installed and commissioned in accordance with the manufacturer's instructions Yes ☐

The operation of the boiler and system controls have been demonstrated to and understood by the customer Yes ☐

The manufacturer's literature, including Benchmark Checklist and Service Record, has been explained and left with the customer Yes ☐

Commissioning Engineer's Signature _____

Customer's Signature _____

(To confirm satisfactory demonstration and receipt of manufacturer's literature)

*All installations in England and Wales must be notified to Local Authority Building Control (LABC) either directly or through a Competent Persons Scheme. A Building Regulations Compliance Certificate will then be issued to the customer.

benchmark COLLECTIVE MARK
THE MARK OF QUALITY FOR THE INSTALLATION, COMMISSIONING AND SERVICING OF DOMESTIC HEATING AND HOT WATER SYSTEMS

©Heating and Hotwater Industry Council (HHIC)

SERVICE RECORD

It is recommended that your heating system is serviced regularly and that the appropriate Service Record is completed.

Service Provider

Before completing the appropriate Service Record below, please ensure you have carried out the service as described in the manufacturer's instructions.

Always use the manufacturer's specified spare part when replacing controls.

SERVICE 1 Date

Energy Efficiency Checklist completed? Yes ☐ No ☐

Engineer Name

Company Name

Telephone Number

CORGI ID Number

Comments

Signature

SERVICE 2 Date

Energy Efficiency Checklist completed? Yes ☐ No ☐

Engineer Name

Company Name

Telephone Number

CORGI ID Number

Comments

Signature

SERVICE 3 Date

Energy Efficiency Checklist completed? Yes ☐ No ☐

Engineer Name

Company Name

Telephone Number

CORGI ID Number

Comments

Signature

SERVICE 4 Date

Energy Efficiency Checklist completed? Yes ☐ No ☐

Engineer Name

Company Name

Telephone Number

CORGI ID Number

Comments

Signature

SERVICE 5 Date

Energy Efficiency Checklist completed? Yes ☐ No ☐

Engineer Name

Company Name

Telephone Number

CORGI ID Number

Comments

Signature

SERVICE 6 Date

Energy Efficiency Checklist completed? Yes ☐ No ☐

Engineer Name

Company Name

Telephone Number

CORGI ID Number

Comments

Signature

SERVICE 7 Date

Energy Efficiency Checklist completed? Yes ☐ No ☐

Engineer Name

Company Name

Telephone Number

CORGI ID Number

Comments

Signature

SERVICE 8 Date

Energy Efficiency Checklist completed? Yes ☐ No ☐

Engineer Name

Company Name

Telephone Number

CORGI ID Number

Comments

Signature

SERVICE 9 Date

Energy Efficiency Checklist completed? Yes ☐ No ☐

Engineer Name

Company Name

Telephone Number

CORGI ID Number

Comments

Signature

SERVICE 10 Date

Energy Efficiency Checklist completed? Yes ☐ No ☐

Engineer Name

Company Name

Telephone Number

CORGI ID Number

Comments

Signature

Technical Training

The Ideal Boilers Technical Training Centre offers a series of first class training courses for domestic, commercial and industrial heating installers, engineers and system specifiers.
For details of courses please ring: 01482 498 432

CERTIFIED PRODUCT
Manufactured under a BS EN ISO 9001: 2000 Quality System accepted by BSI

Ideal Boilers, P.O. Box 103, National Ave, Kingston upon Hull, HU5 4JN. Telephone: 01482 492 251 Fax: 01482 448 858. Registration No. London 322 137.

Ideal Stelrad Group pursues a policy of continuing improvement in the design and performance of its products. The right is therefore reserved to vary specification without notice.

Ideal Stelrad Group

Ideal Installer/Technical Helpline: 01482 498 673
www.idealboilers.com