europa 24/28

Your installation & servicing guide

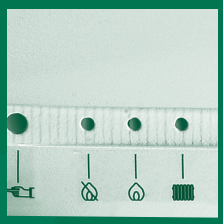

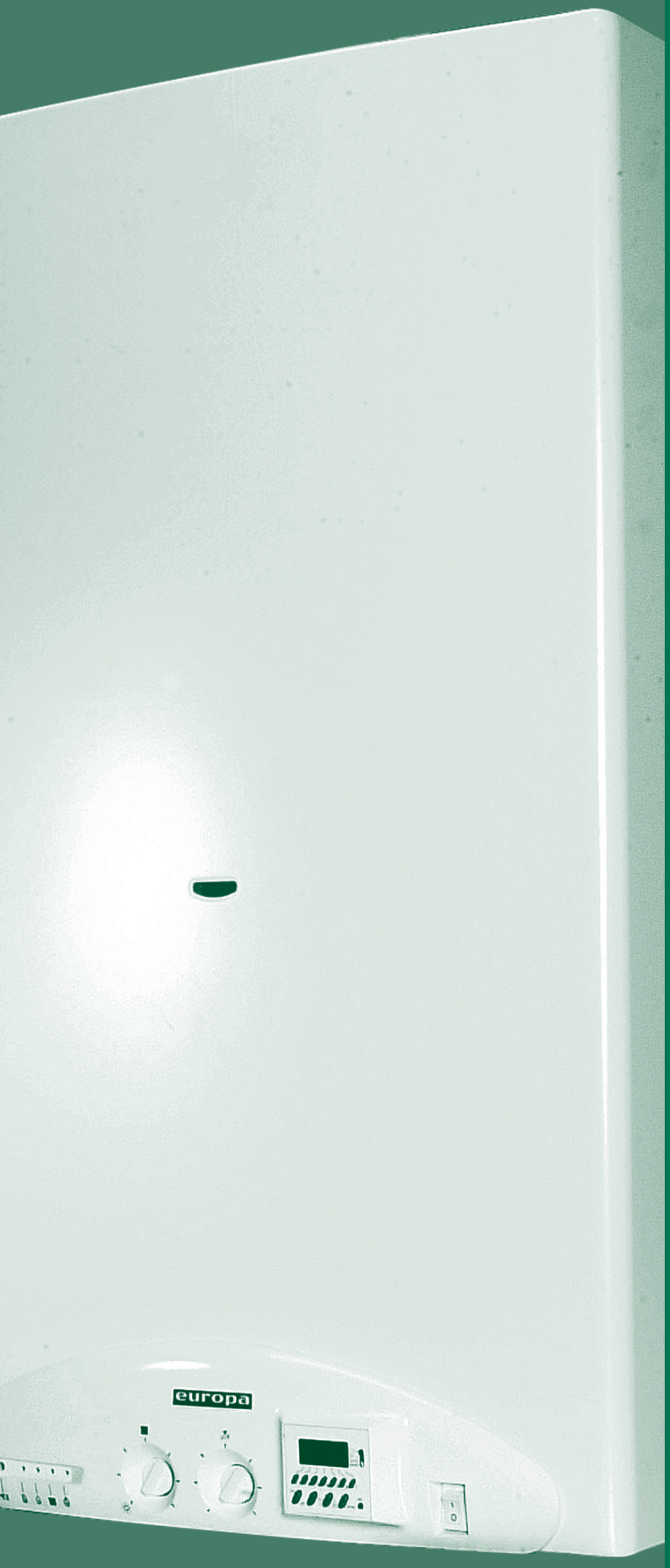

installation & servicing

GENERAL

Table 1 - General Data

		europa 24	europa 28
Gas supply		2H - G20 - 20mbar / 3P - G31 - 37 mbar	
Gas Supply Connection		22mm copper	
Injector size G20 Natural Gas		1.2 mm (13 x)	1.2 mm (15 x)
Inlet Connection	Domestic Hot Water	15mm copper	
Outlet Connection	Domestic Hot Water	15mm copper	
Flow Connection	Central Heating	22mm copper	
Return Connection	Central Heating	22mm copper	
Flue Terminal Diameter	mm (in)	100 (4)	
Average flue temp/mass flow rate	(DHW)	122.5°C / 14.6g/s	124.5°C / 18.1g/s
Maximum Working Pressure (Sealed Systems)	bar (lb/in²)	3.0 (43.5)	
Maximum Domestic Hot Water Inlet Pressure	bar (lb/in²)	10.0 (145)	
Minimum Domestic Hot Water Inlet Pressure	bar (lb/in²)	0.5 (7)	
Electrical Supply / Power consumption		230 V ~ 50 Hz. / 137 W	
Fuse Rating		External : 3A Internal : 4AF 250 V	
Water content	Central Heating litre (gal)	1.5 (.33)	1.6 (.35)
	Domestic Hot Water	0.5 (0.11)	0.5 (0.11)
Packaged Weight	kg (lb)	38 (84)	39 (86)
Maximum Installation Weight	kg (lb)	36 (80)	37 (82)
Boiler Casing Size	Height mm (in)	700 (27 5/8")	750 (29 1/2")
	Width mm (in)	450 (17 3/4")	
	Depth mm (in)	285 (11 1/4")	

Table 2 - Performance Data - Central Heating and Domestic Hot Water (D.H.W.)

		europa 24		europa 28	
Boiler Input :		**Max.**	**Min.**	**Max.**	**Min.**
Nett CV	kW	26.5	12.5	31.0	14.5
	(Btu/h)	(90,400)	(42,650)	(105,800)	(49,500)
Gross CV	kW	29.4	13.9	34.4	16.1
	(Btu/h)	(100,300)	(47,400)	(117,300)	(54,900)
Burner Pressure	mbar	12.8	2.8	13.1	2.9
(G 20)	(in.w.c.)	(5 1/8")	(1 1/8")	(5 1/4")	(1 1/8")
Gas Consumption	l/s	0.78	0.37	0.91	0.42
	(ft³/h)	(99.3)	(47)	(115.8)	(53.5)
Boiler Output :	kW	24.3	11.1	28	12.6
	(Btu/h)	(82,900)	(37,800)	(95,500)	(43,000)
Flow Rates for ΔT 35°C	l/min	10.0		11.5	
Seasonal efficiency (SEDBUK)*		D Band [79.1]%		D Band [79.8]%	
NOx Classification		Class 3			

Note. *For 3rd Family gases, supply and burner pressure are given in the instructions sheet supplied with the Conversion kit.*

* The value is used in the UK Government's Standard Assessment Procedure (SAP) for energy rating of dwellings. The test data from which it has been calculated have been certified by a notified body.

Note. *Gas consumption is calculated using a calorific value of 37.8 MJ/m³ (1038 Btu/ft³) gross or 34 MJ/m³ (910 Btu/ft³) nett at 15°C and 1013.25 mbar.*

To obtain the gas consumption at a different calorific value:

a. ***For l/s*** *- divide the gross heat input (kW) by the gross C.V. of the gas (MJ/m³)*

b. ***For ft³/h*** *- divide the gross heat input (Btu/h) by the gross C.V. of the gas (Btu/ft³)*

Key to symbols

I E = Ireland, **GB** = United Kingdom (Countries of destination)

PMS = Maximum operating pressure of water

C_{12} C_{32} C_{52} = A room sealed appliance designed for connection via ducts to a horizontal or vertical terminal, which admits fresh air to the burner and discharges the products of combustion to the outside through orifices which, in this case, are concentric. The fan is down stream of the combustion chamber.

II_{2H3P} = An appliance designed for use on 2nd and 3rd Family gases.

CAUTION. To avoid the possibility of injury during the installation, servicing or cleaning of this appliance, care should be taken when handling edges of sheet steel components.

europa

Natural Gas only

G.C. Appliance No. 47-348-20 (europa 24)
G.C. Appliance No. 47-348-21 (europa 28)

PI No. 0049AU2867 (**europa 24**)
0049AU2949 (**europa 28**)

Destination Countries: GB, IE

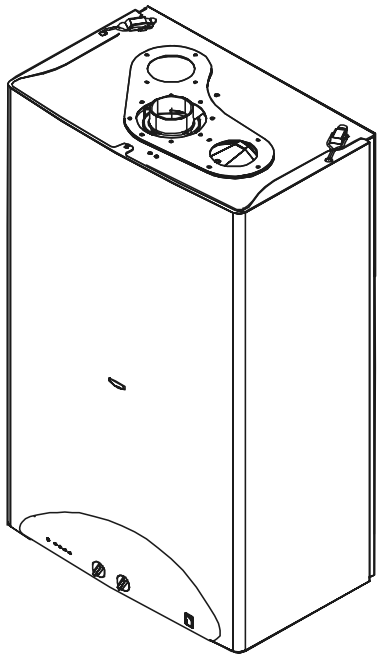

BENCHMARK LOG BOOK DETAILS

Boiler	**Page**
Make and model	3
Appliance Serial No. on Data Badge	
Controls	as applicable
For all boilers	
Flushing to BS.7593	10
Inhibitor	10
Gas inlet working pressure	7
Burner operating pressure	2
Heat input	to be calculated
Temperature differential	measure and record
For combination boilers	9
For domestic hot water mode	9

For all boilers: *complete, sign & hand over to customer*
For assistance see Technical Helpline on the back page

CONTENTS

page no.

Air Supply 7
Boiler Clearances 6
Boiler Exploded Diagram 10, 11
Electrical Connections 22
Electrical Supply 8
Extension Ducts - Fitting 17, 18
Fault Finding ..... 45 to 49
Flow Wiring Diagram 23
Flue Fitting
Rear outlet 13
Side outlet 13
Flue Installation 7
Gas Safety Regulations 5
Gas Supply 7
Installation ..... 10 to 27
Mandatory Requirements ..... 5 to 9
Pump 39
Servicing ..... 28 to 44
Short List of Parts 50
Thermostatic Radiator valves 8
Water and Systems ..... 8 to 10
Water Connections 19, 20
Water Treatment 10
Wiring Diagrams ..... 21 to 23

NOTE TO THE INSTALLER: LEAVE THESE INSTRUCTIONS ADJACENT TO THE GAS METER. ALSO COMPLETE THE BENCHMARK LOG BOOK AND GIVE THIS TO THE CUSTOMER.

benchmark™

INTRODUCTION

The europa combi boiler is a fully automatically controlled, wall mounted, low water content, fanned flue combination gas boiler.

Note.
Due to the high efficiency of the boiler a plume of water vapour may form at the terminal during operation.

Central heating (CH) output is fully modulating with a range of:

11.1 to 24.3 kW (37,800 to 82,900 Btu/h) for **europa 24**

12.6 to 28.0 kW (43,000 to 95,500 Btu/h) for **europa 28**

Instantaneous Domestic hot water (DHW) output is also fully modulating with a maximum of:

24.3 kW (82,900 Btu/h) for **europa 24**

28 kW (95,500 Btu/h) for **europa 28**

The boiler is supplied fully assembled with DHW built in heat exchanger, diverter valve, circulating pump, pressure gauge, safety valve and CH expansion vessel.

Variable CH and DHW temperature controls are fitted on the user control.

The boiler casing is of white painted coated mild steel.

The boiler temperature controls are placed at the botton of the front panel.

The heat exchanger is of finned oval copper tubes.

The boiler is suitable for connection to fully pumped, sealed water systems ONLY.

The system pipework MUST include drain cocks in appropriate places.
Pipework from the boiler is routed downwards as standard, but may be routed upwards behind the boiler using the stand-off frame (supplied in a separate kit).

OPERATION

With no demand for CH the boiler fires only when DHW is drawn off.

When there is a demand for CH, the heating system is supplied at the selected temperature of between 45°C and 82°C, until DHW is drawn off. The full output from the boiler is then directed via the diverter valve back to the heat exchanger to supply a maximum DHW draw-off at 35°C temperature rise of:

- 10.0 l/min for **europa 24**
- 11.5 l/min for **europa 28**

At low DHW draw-off rate the maximum temperature is limited to 62 °C by the modulating gas control.

Refer also to Frame 1 - 'Boiler Water Circuit Diagrams'

1 BOILER WATER CIRCUIT DIAGRAMS

Central Heating Circuit

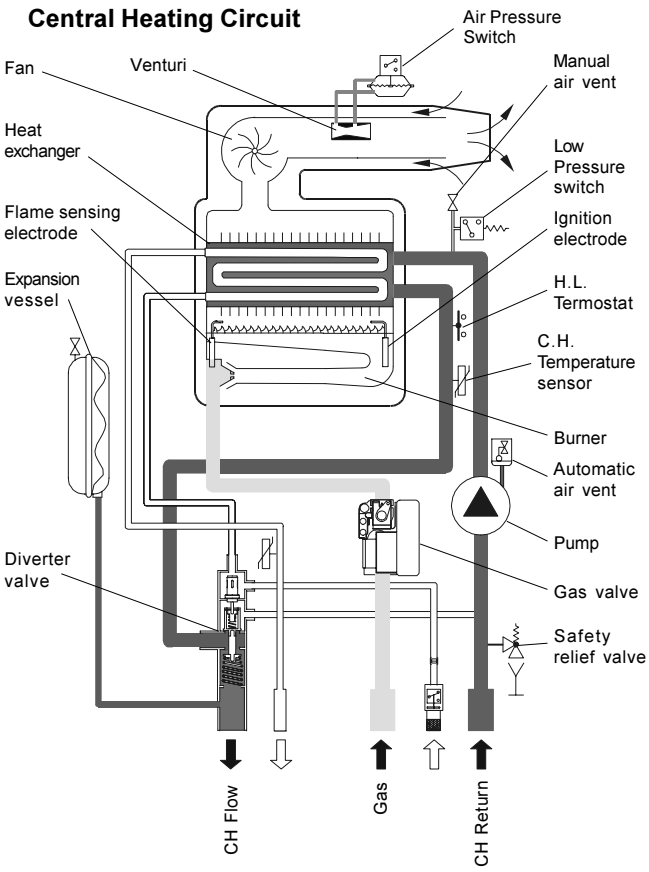

Domestic Hot Water Circuit

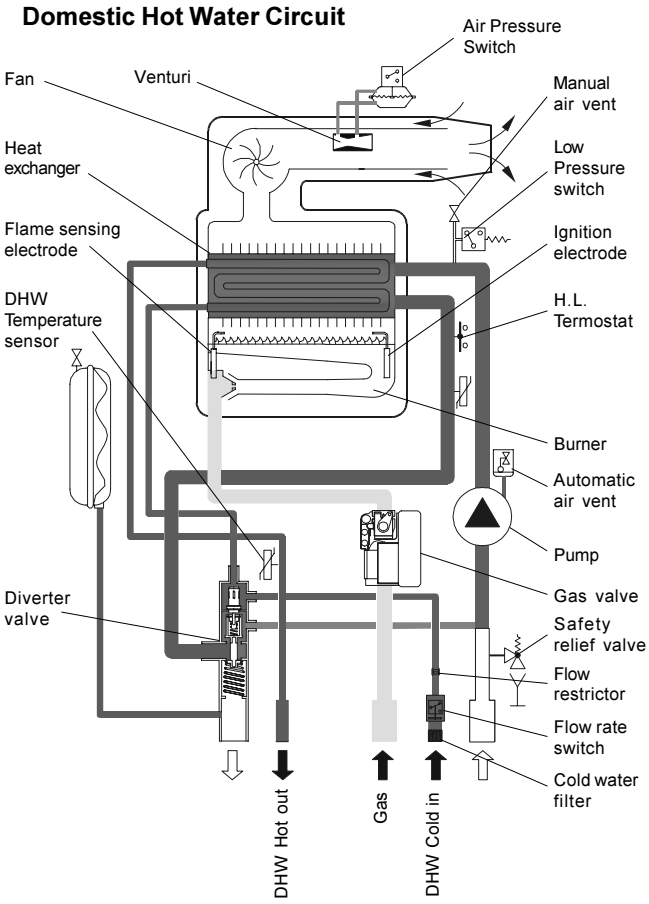

OPTIONAL EXTRA KITS

- **Flue Extension Duct 1 m** Pack D up to 3 m (122 in).
- **Flue extension ducts 250 mm length Pack D1**
- **90° Elbow** (maximum 2 per installation).
- **45° Elbow** (maximum 2 per installation).
- **Roof Flue Kit** (to a maximum of 4.2 m)
- **Inclined roof tile**
- **Flat roof tile**
- **Vertical flue connection**
- **Boiler Stand-off Kit**
- **Conversion kit to change from 2nd family gasses to 3rd family**
- **Conversion kit to change from 3rd family gasses to 2nd family**
- **DHW mini expansion vessel**
- **Twin pipe flue system**
- **Pre Piping kit**

Note: For "Twin" pipe system refer to your supplier

SAFETY

Current Gas Safety (installation and use) regulations or rules in force:

It is law that **all** gas appliances are installed and serviced by a CORGI registered installer in accordance with the above regulations. Failure to install appliances correctly could lead to prosecution. It is in your own interest, and that of safety, to ensure the law is complied with.

The installation of the boiler MUST also be in accordance with the latest I.E.E (BS.7671) Wiring Regulations, local building regulations, bye-laws of the local water authority, the building regulations and the Building Standards (Scotland) and any relevant requirements of the local authority.

Detailed recommendations are contained in the following British Standard Codes of Practice:

BS. 5440:1	Flues (for gas appliances of rated input not exceeding 70 kW).
BS. 5440:2	Ventilation (for gas appliances of rated input not exceeding 70 kW).
BS. 5449	Forced circulation hot water systems.
BS. 5546	Installation of gas hot water supplies for domestic purposes (2nd and 3rd Family Gases)
BS. 6798	Installation of gas fired hot water boilers of rated input not exceeding 70 kW.
BS. 6891	Low pressure installation pipes.

Health & Safety Document No. 635.

The Electricity at Work Regulations, 1989.

The manufacturer's notes must NOT be taken, in any way, as overriding statutory obligations.

IMPORTANT. These appliances are CE certificated for safety and performance. It is, therefore, important that no external control devices, e.g. flue dampers, economisers etc., are directly connected to these appliances unless covered by these Installation and Servicing Instructions or as otherwise recommended by **Caradon Ideal Limited** in writing. If in doubt please enquire.

Any direct connection of a control device not approved by **Caradon Ideal Limited** could invalidate the certification and the normal appliance warranty. It could also infringe the Gas Safety Regulations and the above regulations.

SAFE HANDLING OF SUBSTANCES

Care should be taken when handling the boiler insulation panels, which can cause irritation to the skin. No asbestos, mercury or CFCs are included in any part of the boiler or its manufacture.

LOCATION OF BOILER AND FLUE OUTLET

The boiler must be installed on a flat and vertical wall, capable of adequately supporting the weight of the boiler and any ancillary equipment.

The boiler may be fitted on a combustible wall and insulation between the wall and the boiler is not necessary, unless required by the local authority.

For electrical safety reasons there must be no access available from the back of the boiler.

The boiler must not be fitted outside.

Timber Framed Buildings
If the boiler is to be fitted in a timber framed building it should be fitted in accordance with the Institute of Gas Engineering document IGE/UP/7:1998.

Where installation will be in an unusual location, special procedures may be necessary and BS 6798 gives detailed guidance on this aspect.

Compartment Installations

A compartment used to enclose the boiler should be designed and constructed specially for this purpose.

An existing cupboard or compartment may be used, provided that it is modified for the purpose.

In both cases, details of essential features of cupboard / compartment design, including airing cupboard installation, are to conform to the following:

- BS 6798 (No cupboard ventilation is required - see air supply for details).
- The position selected for installation MUST allow adequate space for servicing in front of the boiler.
- For the minimum clearances required for safety and subsequent service, see the wall mounting template and Frame 2. In addition, sufficient space may be required to allow lifting access to the wall mounting plate.

Bathroom Installations

The boiler may be installed in any room or internal space, although particular attention is drawn to the requirements of the current I.E.E. (BS.7671) Wiring Regulations and, in Scotland, the electrical provisions of the building regulations applicable in Scotland with respect to the installation of the boiler in a room or internal space containing a bath or shower.

Where a room sealed appliance is installed in a room containing a bath or shower then the appliance and any electrical switch or appliance control utilising mains electricity should be so situated that it cannot be touched by a person using the bath or shower.

Note. *It is not permissible to install a mains socket in a bathroom.*

Where installation will be in an unusual location, special procedures may be necessary and BS 6798 gives detailed guidance on this aspect.

2 BOILER DIMENSIONS, SERVICES & CLEARANCES *all dimensions in mm (in)*

The following minimum clearances must be maintained for operation and servicing.

Additional space will be required for installation, depending upon site conditions.

Side and Rear Flue

a Provided that the flue hole is cut accurately, e.g. with a core drill, the flue can be installed from inside the building where wall thicknesses do not exceed 600 mm (24"). Where the space into which the boiler is going to be installed is less than the length of flue required the flue must be fitted from the outside.

Installation from inside ONLY

b. If a core boring tool is to be used inside the building the space in which the boiler is to be installed must be at least wide enough to accommodate the tool.

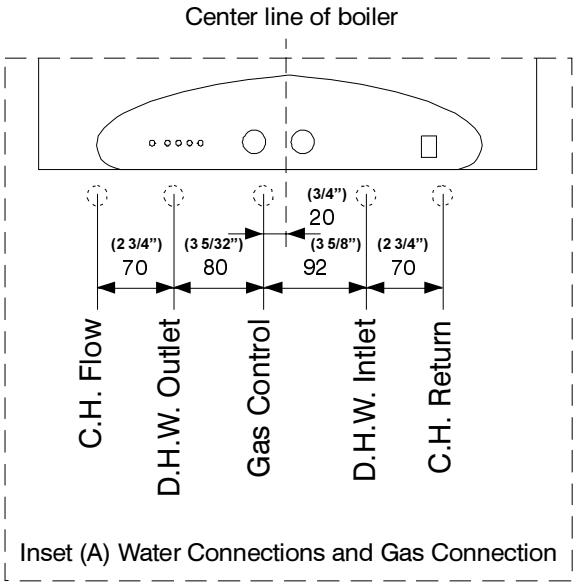

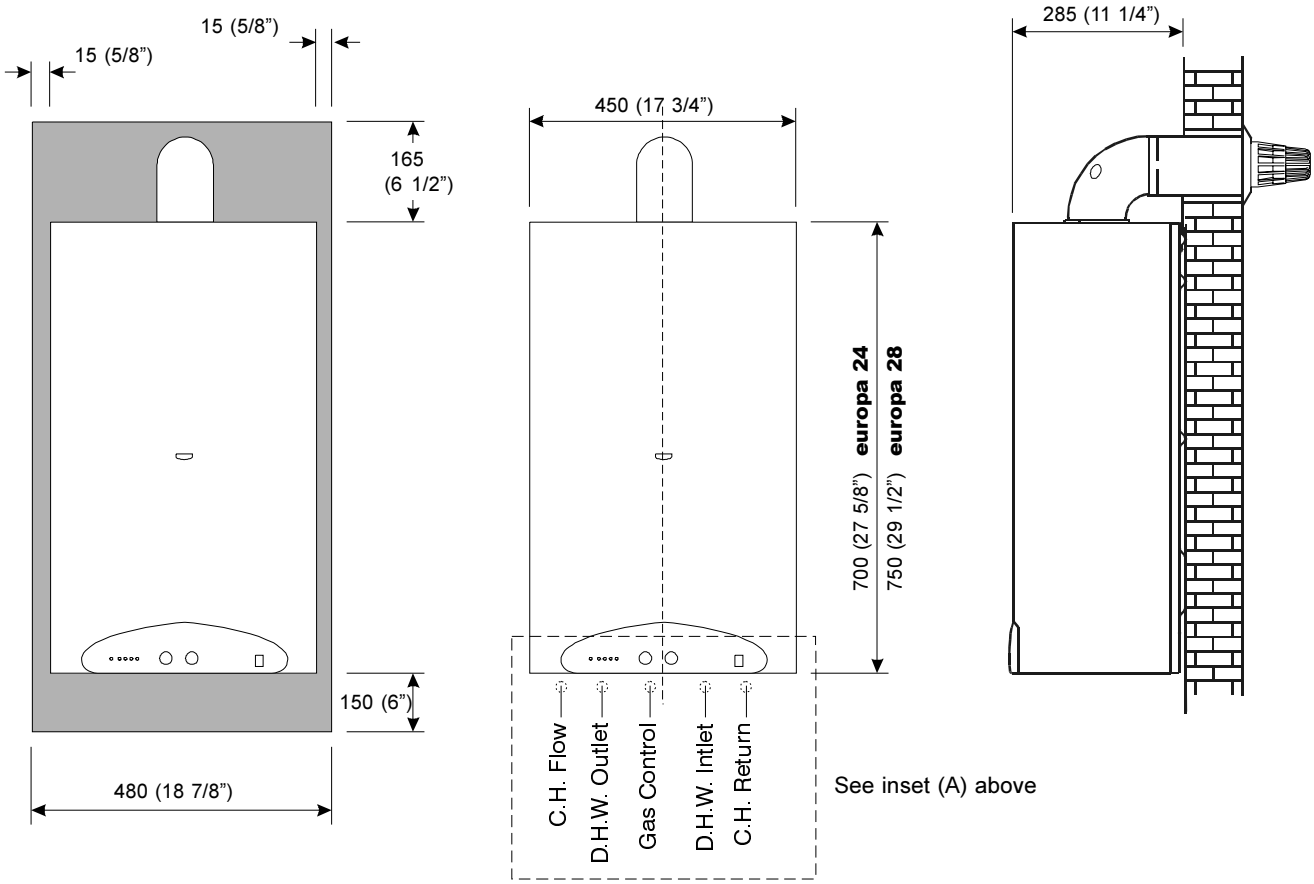

Front clearance

The minimum front clearance when built in to a cupboard is 5 mm (1/4") from the cupboard door but 480 mm (18 7/8") overall clearance is still required, with the cupboard door open, to allow for servicing.

*** Bottom clearance**

Bottom clearance after installation can be reduced to 5 mm. However, 150 mm must be available for servicing.

BOILER DIMENSIONS

GAS SUPPLY

The local gas supplier should be consulted, at the installation planning stage, in order to establish the availability of an adequate supply of gas. An existing service pipe must NOT be used without prior consultation with the local gas supplier.

The boiler MUST be installed on a gas supply with a governed meter only.

A gas meter can only be connected by the local gas supplier or by a registered CORGI engineer.

An existing meter should be checked, preferably by the gas supplier, to ensure that the meter is adequate to deal with the rate of gas supply required. A minimum working gas pressure of 20 mbar should be available at the boiler inlet.

Do not use pipes of a smaller size than the boiler inlet gas connection.

IMPORTANT.

Installation pipes MUST be fitted in accordance with BS. 6891. Pipework from the meter to the boiler MUST be 22mm O.D.

The complete installation MUST be tested for gas soundness and purged as described in the above code.

FLUE INSTALLATION

Pluming may occur at the terminal, so where possible, terminal positions where this could cause a nuisance should be avoided.

The flue must be installed in accordance with the recommendations of BS. 5440: Part 1, 2000.

The following notes are intended for general guidance:

1. The boiler MUST be installed so that the terminal is exposed to external air.
2. It is important that the position of the terminal allows the free passage of air across it at all times.
3. Minimum acceptable spacing from the terminal to obstructions and ventilation openings are specified in Table 3.

Table 3 - Balanced flue terminal position

Terminal Position	Minimum Spacing
1. Directly below or alongside an opening window, air vent or other ventilation opening	300 mm (12")
2. Below guttering, drain pipes or soil pipes	75 mm (3")
3. Below eaves	200 mm (8")
4. Below balconies or a car port roof	200 mm (8")
5. From vertical drain pipes or soil pipes	150 mm (6")
6. From internal or external corners	300 mm (12")
7. Above adjacent ground, roof or balcony level	300 mm (12")
8. From a surface facing the terminal	600 mm (24")
9. From a terminal facing a terminal	1200 mm (48")
10. From an opening in a car port (e.g. door or window) into dwelling	1200 mm (48")
11. Vertically from a terminal on the same wall	1500 mm (60")
12. Horizontally from a terminal on the wall	300 mm (12")

4. Where the lowest part of the terminal is fitted less than 2m (6'6") above a balcony, above ground or above a flat roof to which people have access then the terminal MUST be protected by a purpose designed guard.

   Terminals guards are available from boiler suppliers. Ask for Tower Flue Guard, Model K6. In case of difficulty seek advice from:

   Grasslin (UK) Ltd.,
   Vale Rise, Tonbridge, Kent TN9 1TB
   Telephone No. 01732 359 888

   Ensure that the guard is fitted centrally.

5. Where the terminal is fitted within 850mm (34") of a plastic or painted gutter or 450mm (18") of painted eaves then an aluminium shield at least 750mm (30") long should be fitted to the underside of the gutter or painted surface fitted centrally above the flue.
6. The air inlet/products outlet duct and the terminal of the boiler MUST NOT be closer than 25mm (1") to combustible material. Detailed recommendations on the protection of combustible material are given in BS. 5440: Part 1, 2000.

IMPORTANT. It is absolutely essential to ensure, in practice, that products of combustion discharging from the terminal cannot re-enter the building or any other adjacent building through ventilators, windows, doors, other sources of natural air infiltration, or forced ventilation / air conditioning.

If this should occur the appliance MUST be turned OFF, labelled as 'unsafe' until corrective action can be taken.

TERMINAL

The terminal assembly can be adapted to accommodate various wall thicknesses. Refer to Frame 9 - Unpacking.

AIR SUPPLY

Detailed recommendations for all supply are given in BS5440.2

The following notes are for general guidance:

1. It is NOT necessary to have a purpose-povided air vent in the room or internal space in which the boiler is installed.

2. If the boiler is to be installed in a cupboard or compartment permanent air vents are required (for cooling purposes) in the cupboard/comparment, at both high and low levels.

The air vents must either comunicate with room/internal space, or be direct to outside air. The minimum efective areas of the permanent air vents, required in the cupboard/compartment, are specified as follows and are related to maximum rated heat input.

3. Both air vents MUST communicate with the same room or internal space or MUST be on the same wall to outside air.

4. In siting the air vents care must be taken to avoid the freezing of pipework.

Table 4

Europa	Air from room/internal space cm^2 (in^2)	Air direct from outside cm^2 (in^2)
24	265 (41)	133 (21)
28	310 (48)	155 (24)

WATER CIRCULATION SYSTEM

The boilers are designed for connection to pressurised, fully pumped, sealed water central heating systems ONLY. The domestic hot water (DHW) calorifier is incorporated within the heat exchanger and only requires connection to the mains water supply.

IMPORTANT

Ensure that the mains water supply pressure is adequate to provide the required DHW flow rate. Refer to Table 2 on page 2.

The central heating system should be installed and commissioned in accordance with BS. 6798 and, in addition, for smallbore and microbore systems BS. 5449.

The domestic hot water system should be in accordance with BS. 5546 and BS. 6700.

Copper tubing to BS 2871:1 is recommended for water carrying pipework and MUST be used for pipework carrying potable water.

Any soldered joints on potable water pipework MUST NOT be made with solder containing lead.

Ancillary pipework not forming part of the useful heating surface should be lagged to prevent heat loss and any possible freezing - particularly where pipes run through roof spaces or ventilated underfloor spaces.

Draining taps MUST be located in accessable positions, which permit the draining of the whole system.
They should be at least 1/2" BSP nominal size and be in accordance with BS 2879.

Maximum recommended system hydraulic losses are given in the Table within Frame 4.

WATER TREATMENT - See frame 6

THERMOSTATIC RADIATOR VALVES (TRV)

It is recommend that heating systems utilising full thermostatic radiator valve control of temperature in individual rooms should also be fitted with a room thermostat controlling the temperature in a space served by radiators not fitted with such a valve as stated in BS. 5449.

When thermostatic radiator valves are used, the space heating temperature control over a living area having a heating requirement of at least 0.9kW (3000Btu/h) of the boiler heat output should be achieved using a room thermostat whilst other rooms are individually controlled by thermostatic radiator valves. A higher proportion of TRVs may be used, provided that a bypass between the boiler flow and return is fitted, to ensure adequate flow when all TRVs are closed.

For further information refer to the 'Good Practice Guide 143', a publication of the Energy Efficiency Office, available from the Building Research Establishment, Garston, Watford WD2 7JR. Tel: 01923 664258.

ELECTRICAL SUPPLY

Wiring external to the appliance MUST be in accordance with the current I.E.E. (BS.7671) Wiring Regulations and any local regulations which apply.

The point of connection to the mains should be readily accessible and adjacent to the boiler.

3 SYSTEM REQUIREMENTS - Central Heating

Notes

a. *The method of filling, refilling, topping up or flushing sealed primary hot water circuits from the mains via a temporary hose connection is only allowed if acceptable to the local water authority.*

b. *Antifreeze fluid, corrosion and scale inhibitor fluids suitable for use with boilers having copper heat exchangers may be used in the central heating system.*

Advice should be sought from a local water treatment company.

Safety valve setting	bar	3.0
Vessel charge pressure	bar	0.75 to 1
System pre-charge pressure	bar	1.0
System volume (litres)		**Expansion vessel volume (litres)**
25		1.8
50		3.7
75		5.5
100		7.4
125		9.2
150		11.0
175		11.9
190		14.0
200		14.7
250		18.4
300		22.1
For other system volumes multiply by the factor across		0.074

4 SYSTEM REQUIREMENTS - CH (continued) and HOT WATER

General

1. The installation must comply with all relevant national and local regulations.
2. The installation should be designed to work with flow temperatures of up to 82 °C.
3. All components of the system must be suitable for a working pressure of 3 bar and temperature of 110 °C. Extra care should be taken in making all connections so that the risk of leakage is minimised.

   The following components are incorporated within the appliance:

   a. Circulating pump.

   b. Safety valve, with a non-adjustable preset lift pressure of 3 bar.

   c. Pressure gauge, covering a range of 0 to 4 bar.

   d. A 5-litre expansion vessel for **europa 24** and a 8-litre expansion vessel for **europa 28**, with an initial charge pressure of 1 bar.
4. **'Make-up' Water.** Provision must be made for replacing water loss from the system, either :

   a. From a manually filled 'make-up' vessel with a readily visible water level. The vessel should be mounted at least 150 mm above the highest point of the system and be connected through a non-return valve to the system, fitted at least 150 mm below the 'make-up' vessel on the return side of the radiators.

   or

   b. Where access to a 'make-up' vessel would be difficult, by pre-pressurisation of the system.

   The maximum cold water capacity of the system should not exceed 67 litres for **europa 24** and 108 litres for **europa 28**, if not pressurized. However, with the system pressurized, the efficiency of the expansion vessel will be reduced and a larger vessel (or smaller system volume) may be necessary. If the capacity of the vessel is not considered sufficient for this, or for any other reason, an additional vessel MUST be installed on the return to the boiler.

   Guidance on vessel sizing is given in frame 3.

Water Flow Rate and Pressure Loss

europa		**24**	**28**
Max CH Output	kW	24.3	28.0
	(Btu/h)	(82,900)	(95,500)
Water flow rate	l/sec	0.38	0.44
	(gal/min)	4.9	5.7
Temperature Differential	°C	15	15
	(°F)	(27)	(27)
Head available for	m w.g.	2.3	2.3
system pump.	(ft w.g.)	7.5	7.5

5. **Filling.** The system may be filled as follows:

   Through a temporary hose connection from a 'draw-off' tap, supplied from a service pipe under mains pressure. Where the mains pressure is excessive, a pressure reducing valve must be used to facilitate filling.

   i. Thoroughly flush out the whole system with cold water.

   ii. Fill and vent the system until the pressure gauge registers 1.5 bar, and examine for leaks.

   iii. Check the operation of the safety valve by raising the water pressure until the valve lifts.
   This should occur within 0.3 bar of the preset lift pressure.

   iv. Release water from the system until the minimum system design pressure is reached;
   1.0 bar if the system is to be pre-pressurised.

   When installing the filling connection provided with the boiler, an additional WRAS approved value MUST be fitted to the mains water supply, up stream of the double check valve to fully comply with the water regulations

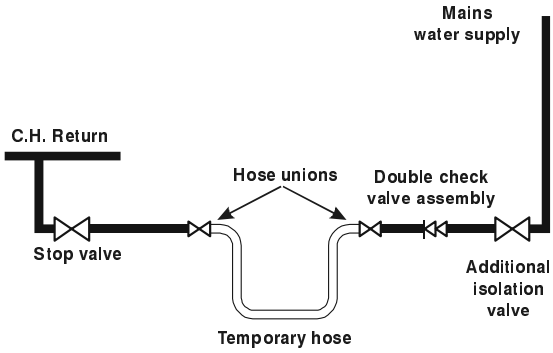

DOMESTIC HOT WATER

Domestic Hot Water Requirements

1. The domestic hot water service must be in accordance with BS 5546 and BS 6700.
2. Refer to Table 1 for minimum and maximum working pressures.
3. The boilers are suitable for connection to most types of washing machine and dishwasher appliances.
4. When connecting to suitable showers, ensure that:

   a. The cold inlet to the boiler is fitted with an approved anti-vacuum or syphon non-return valve.

   b. Hot and cold water supplies to the shower are of equal pressure.
5. **Hard Water Areas**
   Where the water hardness exceeds 200 mg/litre, it is recommended that a proprietary scale reducing device is fitted into the boiler cold supply within the requirements of the local water company.

IMPORTANT

Provision MUST be made to accommodate the expansion of DHW contained within the appliance, if a non-return valve is fitted to the DHW inlet.

5 SYSTEM BALANCING

The boiler does not normally need a bypass but at least some radiators on the heating circuit, of load of at least 20% of the minimum boiler output, must be provided with twin lockshield valves so that this minimum heating load is always available. See note regarding thermostatic radiator valves on page 8.

Note.

Systems incorporating zone valves which could completely cut off the flow through the system, must be wired such that the boiler will not fire or continue to fire when this occurs.

BALANCING

1. Set the programmer to ON.

   Close the manual or thermostatic valves on all radiators, leaving the twin lockshield valves (on the radiators referred to above) in the OPEN position.

   Turn up the room thermostat and adjust these lockshield valves to give boiler flow and return temperatures not more than 20 °C apart.

   These valves should now be left as set.

2. Open all manual or thermostatic radiator valves and adjust the lockshield valves on the remaining radiators, to give around 15 °C temperature drop at each radiator.

3. Adjust the room thermostat and programmer to NORMAL settings.

6 WATER TREATMENT

The europa boiler has a COPPER heat exchanger

IMPORTANT.
The application of any other treatment to this product may render the guarantee invalid.

If water treatment is used, FERNOX MB1 or SENTINEL X100 is recommended. For further information, to contact:

Fernox Manufacturing Co. Ltd.

Tandem House, Marlowe Way, Croydon, Surrey, CRO 4XS.
Tel: 0870 5601 5000

Sentinel Division

Betz Dearborn Ltd., Widnes, Cheshire, WA8 8UD
Tel: 0151 424 5351

Notes.

1. It is most important that the correct concentration of the water treatment product is maintained in accordance with the manufacturers' instructions.
2. If the boiler is installed in an existing system any unsuitable additives *MUST* be removed by thorough cleansing. BS. 7593:1992 details the steps necessary to clean a domestic central heating system.
3. In hard water areas, treatment to prevent lime scale may be necessary - however, the use of artificially softened water is *NOT* permitted.
4. Under no circumstances should the boiler be fired before the system has been thoroughly flushed.

7 BOILER ASSEMBLY - Exploded View Legend

1. Complete casing.
2. LH ignition lead.
3. Gas valve.
4. Gas inlet pipe.
5. Ignition/Flame detection electrode.
6. Burner.
7. Ignition transformer.
8. Pump.
9. Pressure gauge.
10. Fascia board.
11. Control Housing.
12. Automatic air vent.
13. CH return pipe.
14. DHW Inlet fitting.
15. Pump clips.
16. Pressure relief valve.
17. DHW flow switch.
18. DHW inlet pipe.
19. CH flow pipe.
20. CH thermistor.
21. Diverter valve.
22. By-pass pipe.
23. DHW outlet fitting.
24. DHW outlet pipe.
25. DHW inlet pipe.
26. Overheat thermostat.
27. Low water switch.
28. DHW thermistor.
29. Heat exchanger.
30. Air pressure switch.
31. Venturi.
32. Fan outlet gasket.
33. Fan.
34. Fan bracket.
35. Fan inlet gasket.
36. Collector hood.
37. Exp. vessel flexible pipe.
38. Fixing clips.
39. Expansion vessel.
40. Combustion chamber insulation.
41. Combustion chamber.
42. Mains chassis.
43. Flow restrictor.
44. Vertical protection shield.
45. Horizontal protection shield.
46. Flame detection lead.
47. Overheat thermostat clamp.
48. PCB.
49. Fan outlet connector.
96. RH ignition lead.
97. Manual air vent.

8 BOILER ASSEMBLY - Exploded View

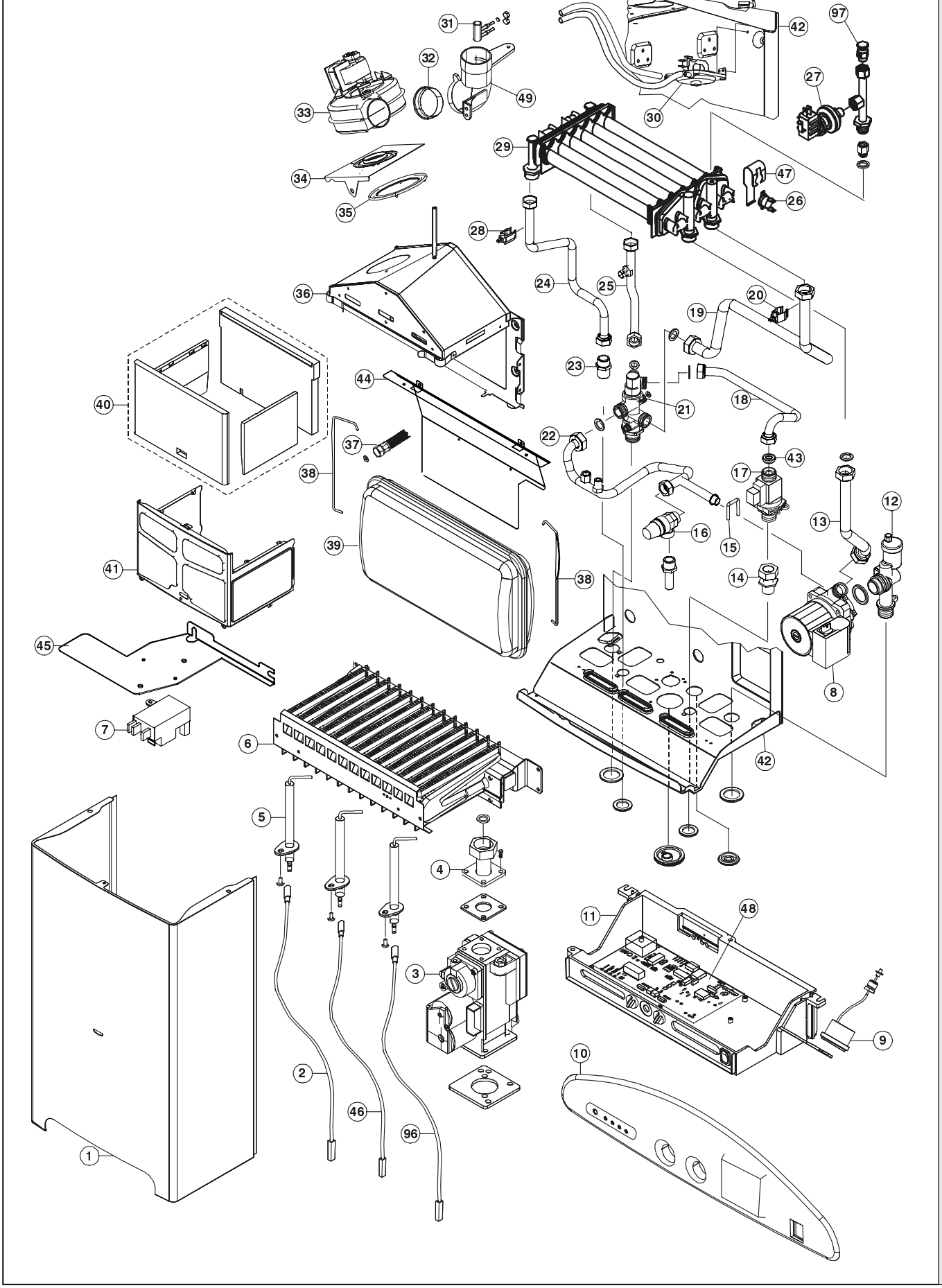

9 UNPACKING

The boiler is supplied fully assembled in one Pack A, together with a standard flue assembly for lengths up to 720 mm, rear or side flue outlet, in Pack B.

Optional extras, if ordered, are available in separate boxes.

Unpack and check the contents.

Pack A Contents
Also contained in Pack A:

- Hardware Pack (listed below).
- These Installation & Servicing Instructions.
- The User's Instructions.
- Benchmark book.

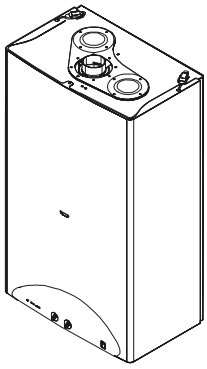

Complete boiler

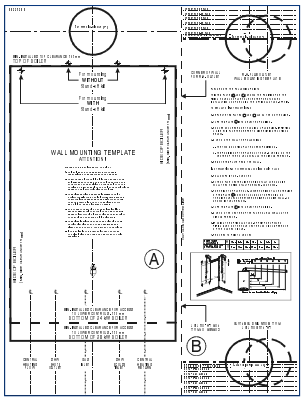

Wall mounting template

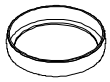

Flue restrictor

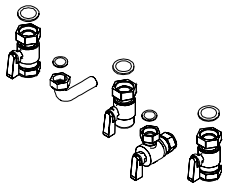

Piping kit

Hardware Pack

- Wall plugs with hook screw - 2 off.
- Wall mounting template - 1 off.
- CH Flow and Return isolating valve - 2 off.
- CW inlet isolating valve - 1 off.
- HW outlet pipe - 1 off.
- Gas isolating valve - 1 off.
- 3/4” gaskets - 3 off.
- 1/2” gaskets - 2 off.
- Smoke outlet diaphragm - 1 off.
- Instructions for mounting flue restrictor

Pack B Contents

1- Flue turret.
2- Flue terminal.
3- External rubber ring.
4- Internal rubber ring.
5- Gasket for turret flange.
6- Gasket for inner pipe - 2 off.
7- Self tapping screws - 4 off.
8- Sleeve with clamp for ext. pipe - 1 off.
Instructions.

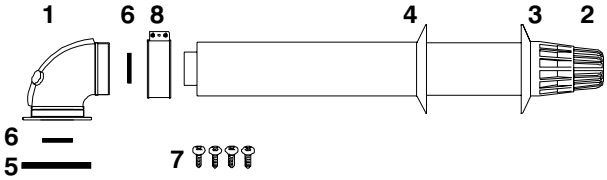

10 PACKAGING REMOVAL

1. Ensure the boiler is positioned correctly as marked on the carton (reverse position).
2. Remove the band and staples.
3. Fold back the top flaps and the plastic bag to get access to the boiler.
4. Reverse the carton on the side where top flap has been folded to 270° (The other top flaps can be folded to 180° only).
5. Lift the card board box.
6. Dispose of packaging.
7. Remove the plastic bag and collect instructions and read them thoroughly before installing the boiler.

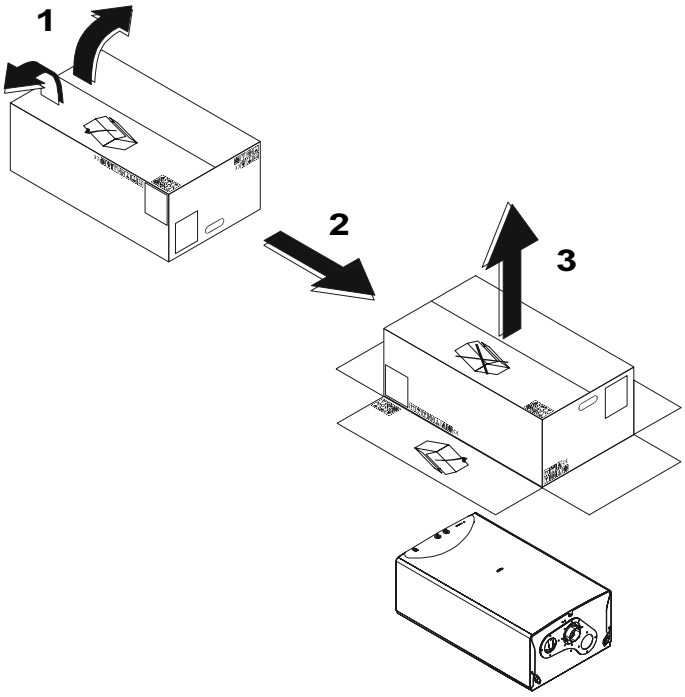

11 CASING REMOVAL

1. Undo the upper front retaining screw (A).
2. Undo the LH and RH side nuts retaining the plastic fascia board (B) and remove.
3. Release the four fixing clamps on the upper and lower positions (2 + 2) (C).
4. Lift and remove casing (D).
5. Place to one side the removed casing to avoid damage.

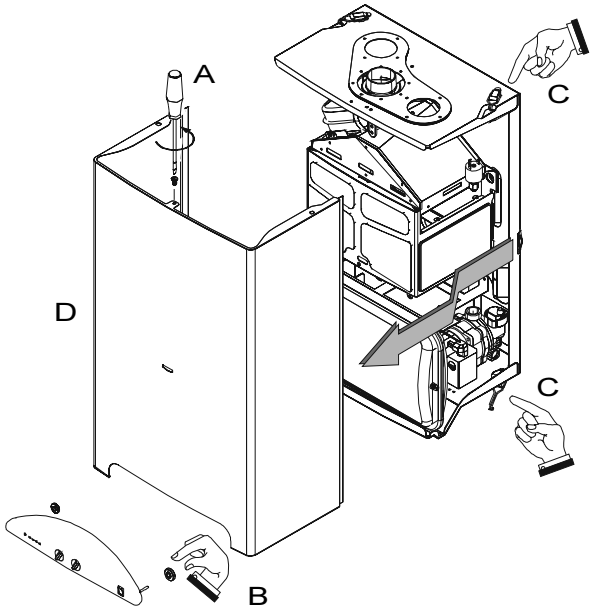

12 DETERMINING THE FLUE LENGTH AND FLUE PACKS REQUIRED

IMPORTANT. The boiler MUST be installed in a vertical position

Dimension X - Wall thickness.

Dimension L - Wall thickness plus boiler spacing.
Dimension S - Upward routing pipework frame depth = 50 mm

FLUE KITS

Pack B - supplied as standard

Pack D - optional extension kit for side flue or rear flue outlet.

Refer to 'Flue Extension Ducts'

Note.

For flue options refer to page 5.

Total Flue length dimension		Flue
Rear flue dim. X+185	Side flue dim. L+225	Extra packs required
Up to 720	Up to 720	none
Up to 1685	Up to 1685	Pack D 1 - off
Up to 2650	Up to 2650	Pack D 2 - off

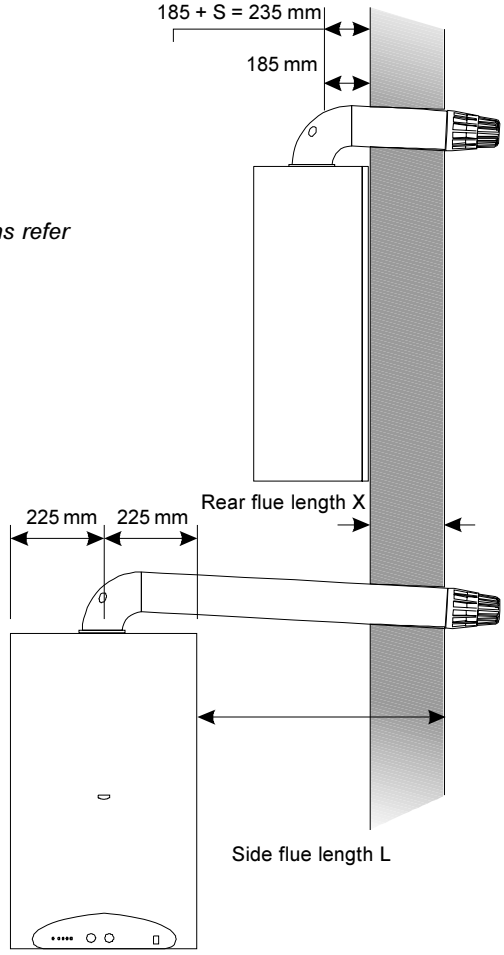

Notes.

1. The flue duct MUST be inclined at 1.5 degrees to the horizontal to not allow the rain come into the boiler.
2. If the boiler is to be installed with upward piping routed behind the boiler then the optional stand-off kit should be used. Care must be taken when cutting the ducts and marking wall to suit this condition.
3. If no extenction ducts are required, the flue restrictor must be fitted.

See also frame 16 and 17

13 FLUE ASSEMBLY - Exploded View

1. An optional flue duct extension kit is required for wall thicknesses greater than :

Side 580 mm (23 5/8").

Rear 620 mm (24 3/8") - w/o stand-off kit.

570 mm (22 3/8") - with stand-off kit.

LEGEND

1- Flue turret.
2- Flue terminal.
3- External rubber ring.
4- Internal rubber ring.
5- Gasket for turret flange.
6- Gasket for inner pipe - 2 off.
7- Self tapping screws - 4 off.
8- Sleeve with clamp for ext. pipe - 1 off.
Instructions.

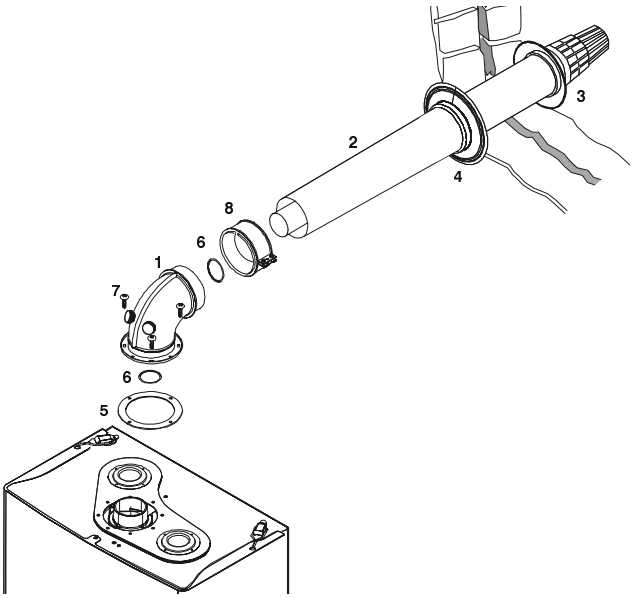

Rear flue arrangement shown

14 WALL MOUNTING TEMPLATE

Notes.

Cut the template in two separated parts (A) and (B):

a. *If rear flue is used, only part (A) off template is necessary.*

b. *If side flue is used, also part (B) off template is necessary; then follow the instructions given on it.*

c. *The template shows the positions of the fixing holes and the flue hole centres for standard installation and for using the stand-off. Care must be taken to ensure the correct holes are drilled.*

1. Tape template into the selected position.

2. Ensure squareness by hanging a plumbline as shown. If fitting a side flue, extend the flue centre line onto the side wall.

3. Mark onto the wall the following:

a. If the boiler will be placed directly to the wall (without stand-off kit): the fixing holes with center to center distance of 135 mm (5 5/16").

b. If the boiler will be placed on the wall by using the stand-off kit: the fixing holes with center to center distance of 392 mm (15 7/16").

c. The position of the flue duct hole.

Note. *Mark the centre of the hole as well as the circumference*

4. Remove the template from the wall.

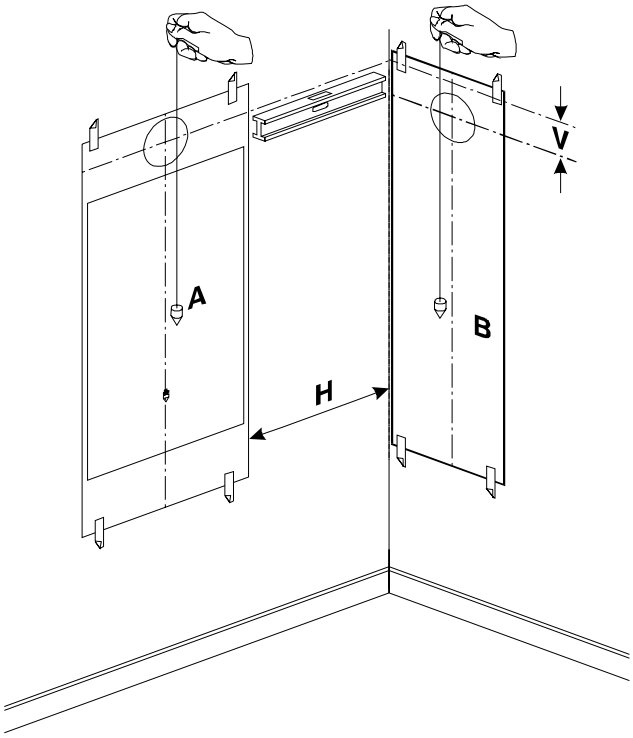

Flue duct hole offset V (mm)	13	26	39	52	65	78

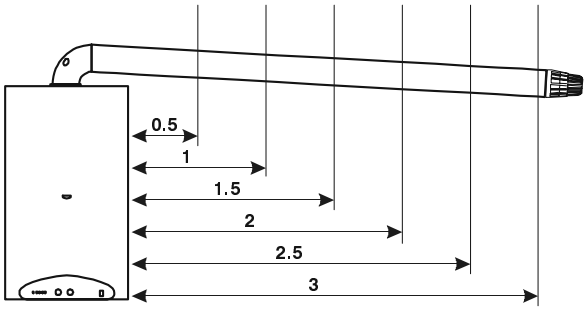

Distance in metres from side of boiler to side wall H (m)

Note.
Side flue only. If the system pipework is to be routed up behind the boiler, the upward routing pipework frame supplied as a separate kit MUST be used secured to the piping frame. It is essential to use the wall mounting template to mark the holes to be drilled. Care MUST be taken to ensure the correct holes are drilled.

15 PREPARING THE WALL

WARNING. Ensure that, during the cutting operation, masonry falling outside of the building does not cause damage or personal injury.

1. Cut the flue hole (preferably with a 5" core boring tool), ensuring that the hole is square to the wall. Both wall faces immediately around the cut hole should be flat.
2. Drill 2 holes (see frame 14) with a 12 mm (1/2") masonry drill for the wall mounting bracket.

   or

   Drill 4 holes (see frame 14) with a 12 mm (1/2") masonry drill for the stand-off kit.

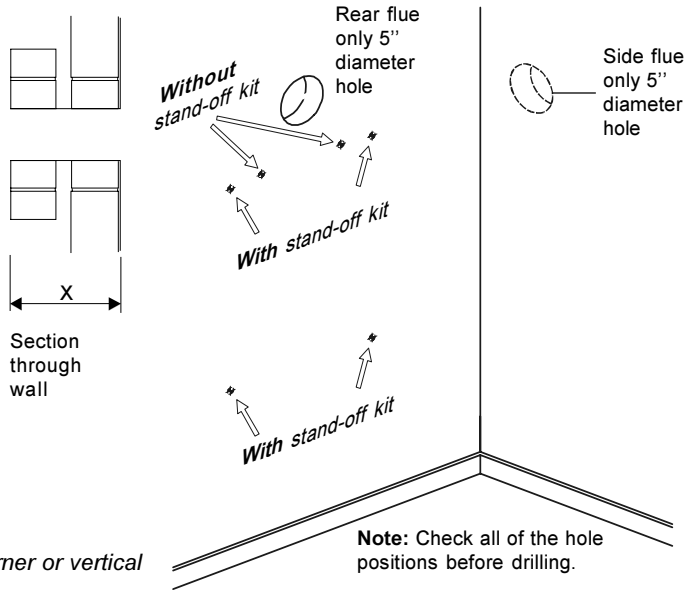

Note. *If the terminal is to be sited within 25-40 mm of a corner or vertical pipe then the hole MUST be accurately cut.*

16 CUTTING THE FLUE - REAR **Wall thicknesses of 114 to 620 mm**

Note.

a. If using the extension ducts go to Frame 20.

b. If the upward routing pipe stand-off kit is used it is essential add 50 mm to 'X' the measured wall thickness when marking the flue (this will allow for the fitted stand-off kit).

1. Measure and note wall thickness X - Refer to Frame 12
2. Add 90 mm (3 9/16'') to dimension X and, measuring from the groove, cut the outer tube only.
3. To ensure the tube is cut square, mark the flue all the way round.
4. Cut the inner tube to a length 20 mm (3/4") longer to aid engagement.

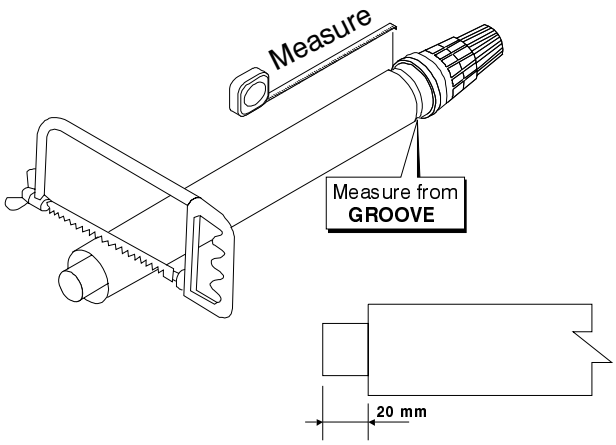

17 CUTTING THE FLUE - SIDE **Wall thicknesses of 114 to 580 mm**

Note.
If using the extension ducts go to Frame 20.

1. Measure and note wall thickness X - Refer to Frame 12
2. Add 130 mm (5 1/8") to dimension X and, measuring from the groove, cut the outer tube only.
3. To ensure the tube is cut square, mark the flue all the way round.
4. Cut the inner tube to a length 20 mm (3/4") longer to aid engagement.

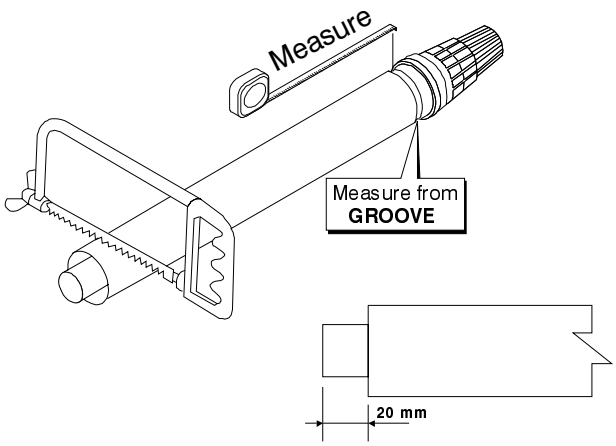

FLUE OUTLET

18 MOUNTING THE BOILER

Note. *All the isolating valves are supplied separately in the hardware pack.*

Fit the boiler either:

a. Directly to the wall

1. Ensure that the plastic plugs are removed from both the DHW and CH pipes before mounting;
   Note. *Some spillage of water may occur from the pipework when mounting the boiler to the installation.*
2. Assemble the 2 plastic plugs and the screws on the wall mounting bracket as indicated;
3. Fit the wall mounting bracket on the wall;
4. Hang the boiler onto the wall mounting bracket;
5. Using the correctly sized fibre washers supplied in the hardware pack, engage and then tighten the 4 water unions;
6. Engage and tighten the gas union, ensuring that the fibre seal is in place;
7. Connect a pipe to the safety drain outlet using a pressure fitting 15 mm O. dia.;

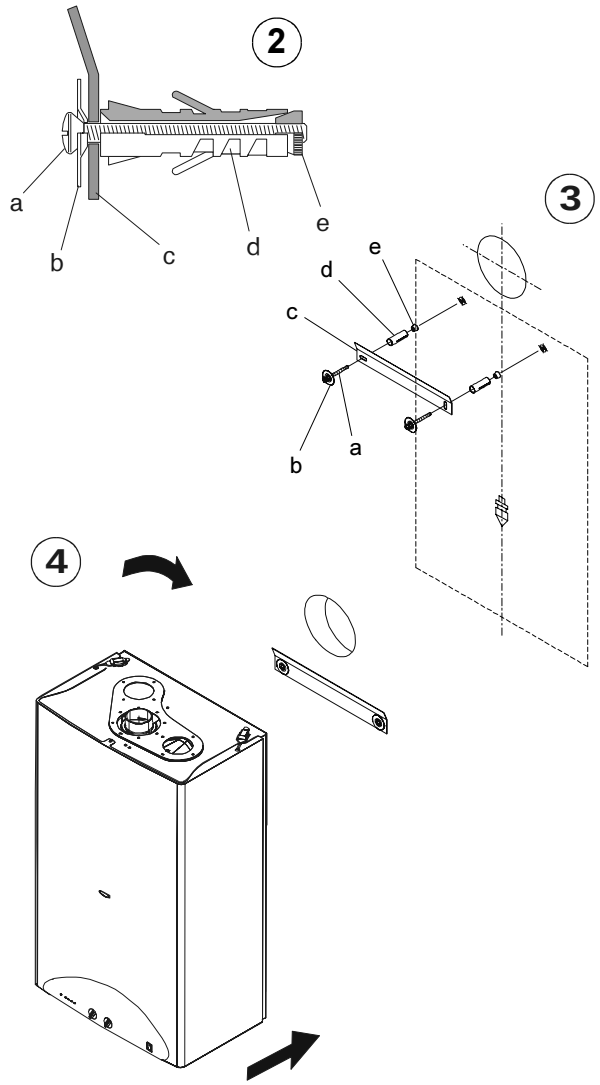

or

b. Use stand-off kit

(To allow pipework to be taken upwards).

1. Assemble the 4 plastic plugs and the screws on the stand-off frame as indicated;
2. Fit the stand-off frame on the wall;
3. Hang the boiler onto the stand-off frame;
4. Using the correctly sized fibre gaskets supplied in the hardware pack, engage and then tighten the 4 water unions;
5. Engage and tighten the gas union, ensuring that the fibre seal is in place;
6. Connect a pipe to the safety drain outlet using a pressure fitting 15 mm O. dia. ;

Note.
If the clearances above and below the boiler are less than the length of the pipes it will be necessary to position the pipes behind the wall mounting plate BEFORE the plate is screwed to the wall.

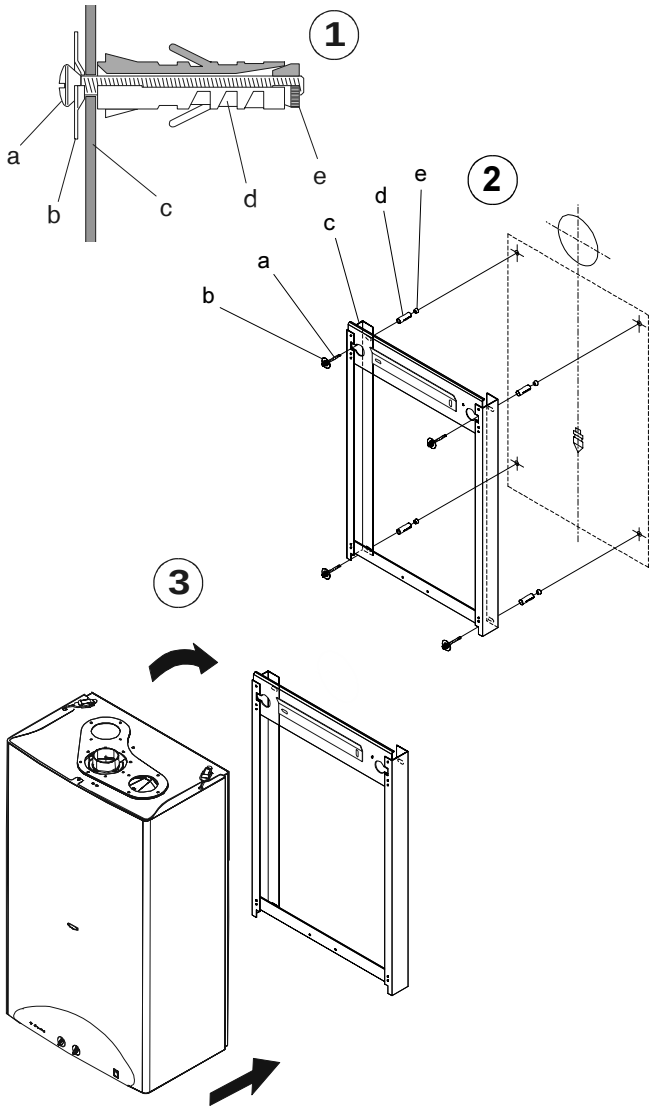

Service connections may be made now, before mounting the boiler. If required refer to Frames 24 to 27.

19 CONNECTING THE FLUE TO THE BOILER

1. Insert the flue assembly through the prepared hole in the wall.
2. Fit the flue turret on the top of the boiler ensuring that the seal is in place, and that the flue outlet seal at A is correctly located.
3. Locate the flue into the turret.
4. Secure the flue turret on top of the boiler by inserting the 4 screws provided.
5. **Flues over 0.72 metre long.**

   Fix the flue support bracket to the wall, using the wall plug and wood screw. For standard installations use the short wood screw.

   If the stand-off option is used, secure the support bracket using the spacer bracket and long wood screw.

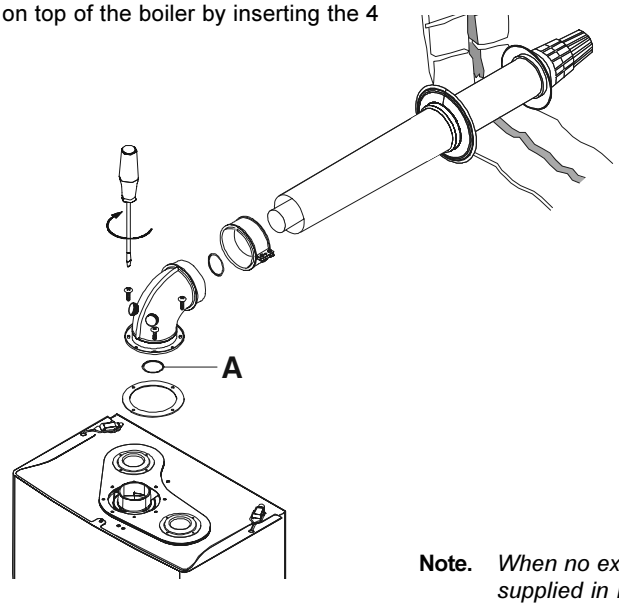

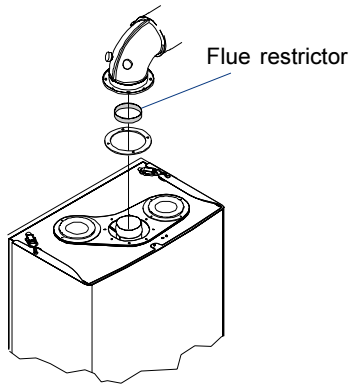

Note. *When no extension duct is used, the flue restrictor supplied in hardware pack "A", must be fitted.*

20 FLUE EXTENSION DUCTS - For flue lengths greater than 720 mm

Pack D Flue extension duct kit contents.

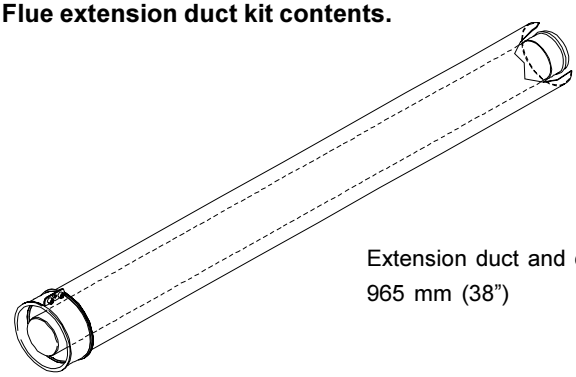

Extension duct and clamp
965 mm (38")

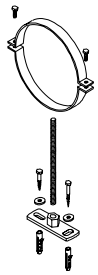

Flue duct support
with wall plugs.

21 FLUE EXTENSION DUCTS - continued

The maximum total flue length is 3 m

General arrangement

1. A ***maximum*** of 3 extension ducts (one suitably cut) plus the standard flue duct may be used together.
2. Flue extensions of greater length than 1m (39") should be supported with the bracket provided, suitably adjusted - refer to Frame 20.

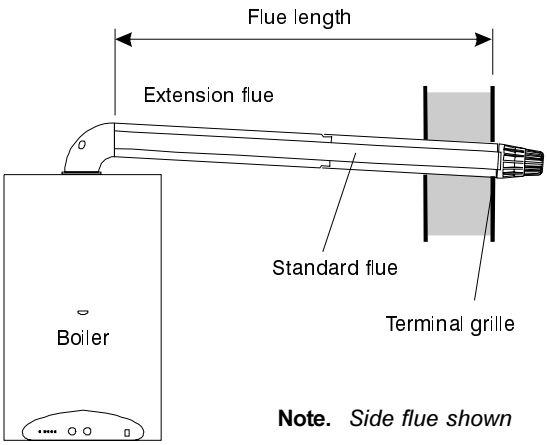

Note. *Side flue shown*

22 FITTING THE KIT

1. Fit the inner flue extension duct onto the inner flue duct.
2. Fit the outer flue extension duct onto the outer air duct.
3. Using the clamp provided clamp the flue lengths together.
4. Repeat steps 1-3 if a second flue extension is required.
5. Measure and mark the flue length required onto the flue, measuring from the groove near the terminal.
6. To ensure a square cut, mark the flue all the way round.
7. Cut to length at the right size the external duct and cut the internal one 20 mm longer.
8. De-burr the metal edges.

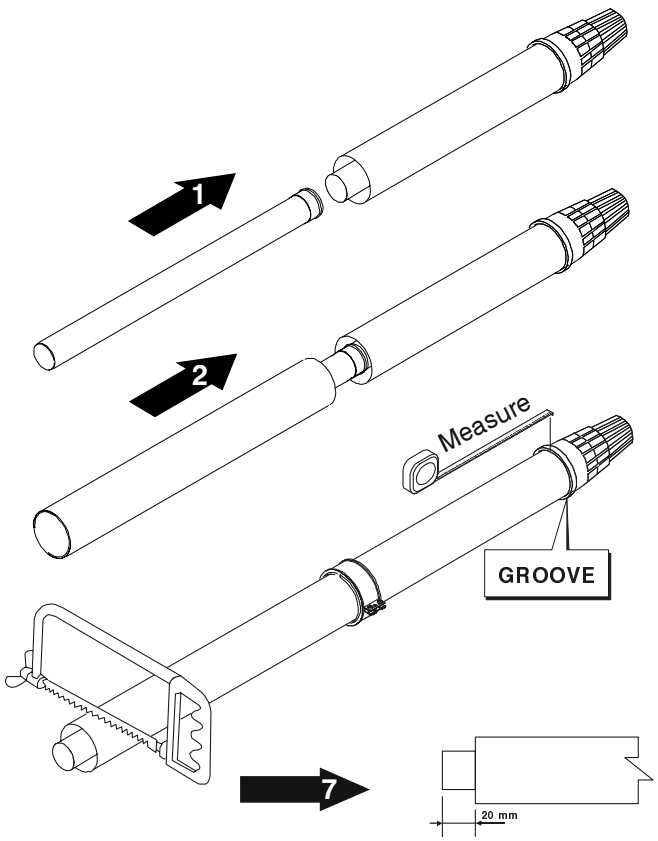

23 SERVICE CONNECTIONS

General Notes

1. Fitting the Piping Frame, top entry pipework is an option, as well as mounting from the bottom or through the wall.

   If pipes are run vertically within the boiler back space provided by optional stand-off frame positions they must avoid any obstructions imposed by the channels and by a rear facing flue, should this position be selected.

2. Horizontal connecting pipes, where used, must be run outside the limits of the boiler casing.

24 WATER CONNECTIONS

CH CONNECTIONS

Refer to General Note, Frame 23, for guidance.

Note. *Do not subject any of the isolating valves to heat as the seals may be damaged.*

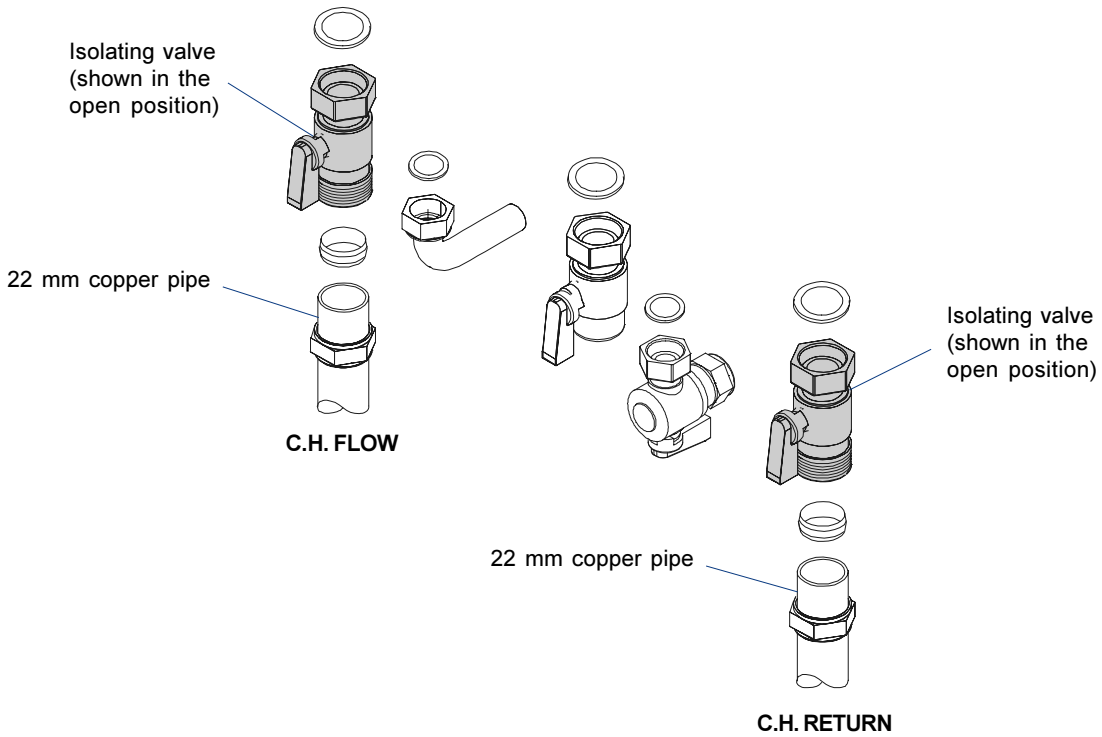

25 WATER CONNECTIONS - continued

DHW CONNECTIONS

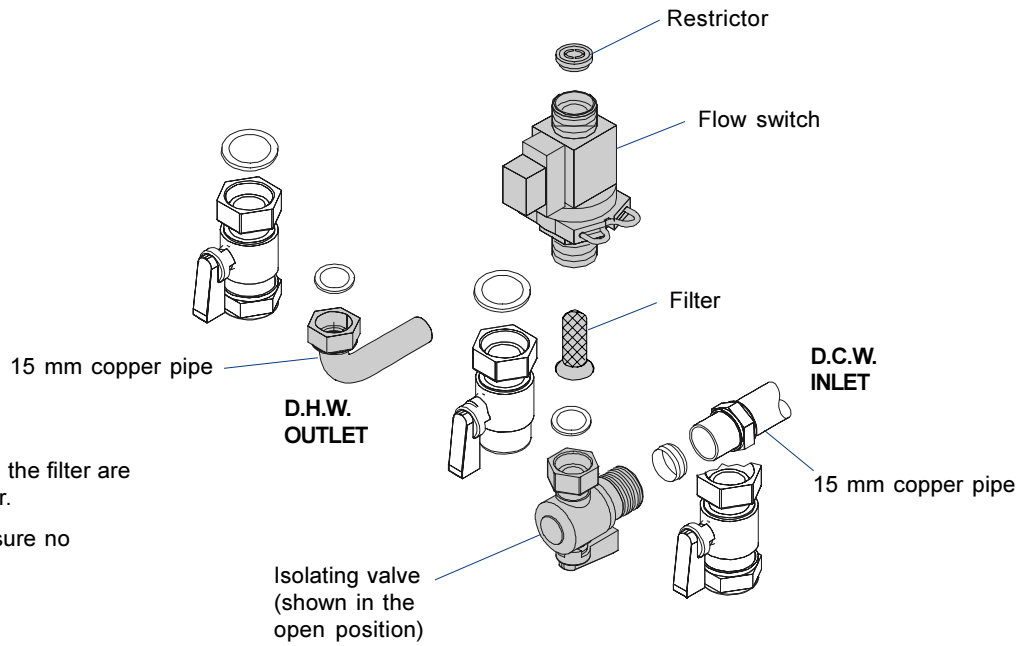

Note. The flow regulator and the filter are mounted internal of the boiler.

It should be inspected to ensure no blockage is evident.

See frame 65

26 GAS CONNECTION

1. Extend a gas supply pipe of not less than 15 mm O.D. copper to the boiler.

   A working gas pressure of 20 mbar (8" w.g) should be available at the boiler inlet, with the boiler firing at full DHW output.

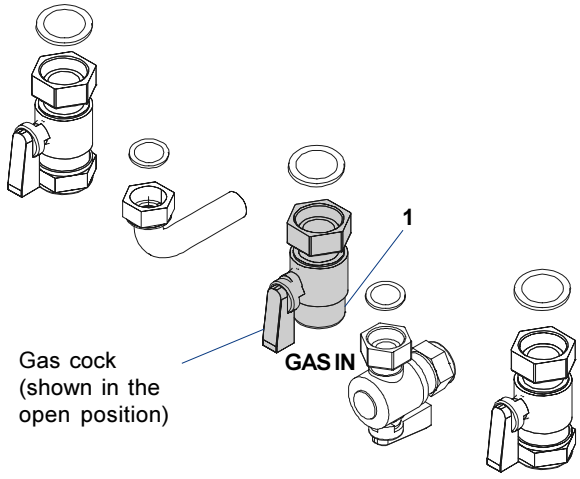

27 SAFETY VALVE DRAIN

The safety valve is located at the bottom RHS of the boiler.

The discharge pipe should be positioned so that the discharge of water or steam cannot create a hazard to the occupants of the premises or damage the electrical components and wiring.

28 FILLING

Central Heating

1. Remove the boiler casing Refer to Frame 11.
2. Ensure that the CH isolating valves are open.
3. Fill and vent the system. Check for water soundness.

IMPORTANT - when filling:

a. The cap on the automatic air vent (refer to Frame 64) MUST be loose at all times.

   When filling, there may be a slight water leak from the vent therefore electrical connections should be protected.

b. Bleed any air from the pump and ensure that it is free to rotate.

   i. Remove the vent plug

   ii. Using a screwdriver, rotate the shaft several times

   iii. Replace the vent plug.

   Note. *Some slight water leakage will occur.*

c. A manual air vent is fitted at the top of the heat exchanger to facilitate air removal during filling and initial lighting (see frame 34, page 24)

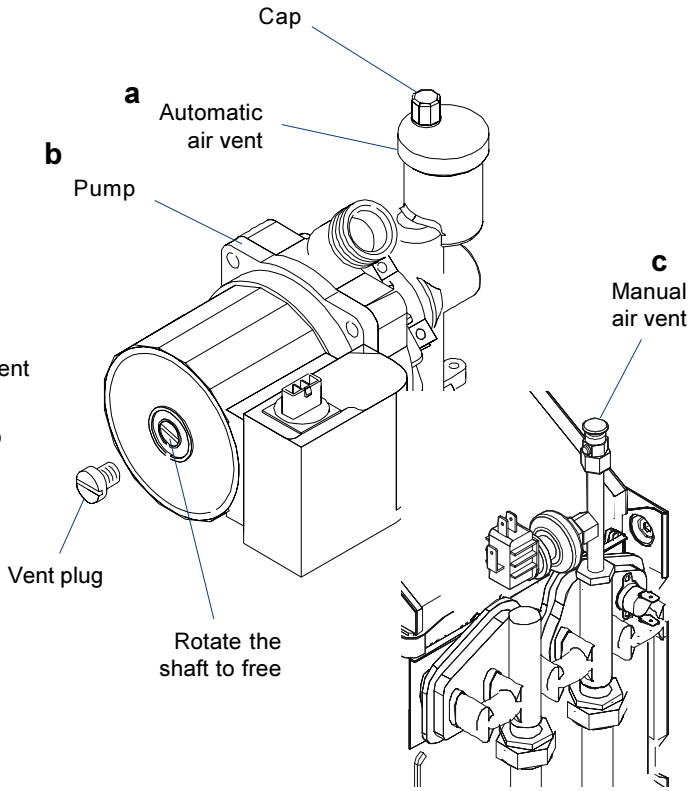

Domestic Hot Water

1. Fully open all DHW taps and ensure that water flows freely from them.
2. Close all taps except the one furthest from the boiler.
3. Turn off the DHW tap.

Note. The domestic hot water flow rate is automatically regulated to a maximum of 12 l/min (2.6 gpm) for **europa 28** and 10 l/min (2.2 gpm) for **europa 24**.

29 ELECTRICAL CONNECTIONS

WARNING. This appliance MUST be earthed.

A mains supply of 230 V ~ 50 Hz is required.

The fuse rating should be 3A.

Wiring external to the boiler MUST be in accordance with the current I.E.E. (BS7671) Wiring Regulations and any local regulations.

All external controls and wiring must be suitable for mains voltage.

Wiring should be 3 core PVC insulated cable, not less than 0.75 mm^2 (24 x 0.2mm), and to BS 6500 Table 16.

Connection must be made in a way that allows complete isolation of the electrical supply such as a double pole switch having a 3mm (1/8") contact separation in both poles, serving only the boiler and system controls. The means of isolation must be accessible to the user after installation.

All boilers are provided complete with 1 m supply cable. In case the cable is not long enough a suitable junction must be used

30 EXTERNAL ELECTRICAL CONTROLS

Wiring External to the Boiler

The fuse rating should be 3A.

Wiring external to the boiler MUST be in accordance with the current I.E.E. (BS.7671) Wiring Regulations and any local regulations.

Frost Protection

The boiler is provided with a built in frost protection electronic system.
When the temperature detected by the CH sensor is below 5°C , the boiler is put into operation till the CH sensor detects a temperature off 15°C.
The frost protection electronic system is operating only if the electrical supply and gas are On.

Room Thermostat

The room thermostat is placed onto the 24 Vdc circuit. **Do not connect any external supply to the room thermostat: this will permanently damage the PCB (see A).**

Designation of the terminals will vary but the thermostat manufacturers' leaflets will give full details.

Diagrams A shows application of boilers fitted with room thermostat and integral programmer.

Diagrams B shows application of boilers fitted with room thermostat, external programmer and remote frost thermostat.

Frost Thermostat

If any part of the pipework is in danger of damage due to frost a frost thermostat may be necessary, preferably fitted on the return pipework.
To facilitate the fitting of a frost thermostat the integral programmer must be unplugged from the PCB.
An independant programmer must be fitted. This must have volt free contacts for switching the boiler on and off according to the timer settings.
The programmer room thermostat and frost thermostat must then be connected as shown in the wiring diagram B.

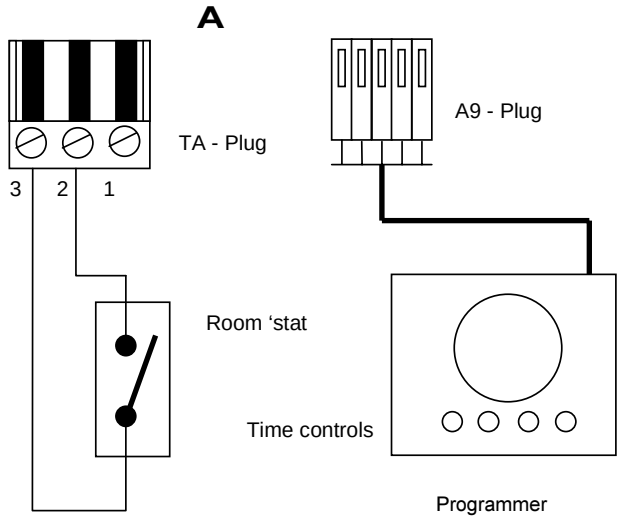

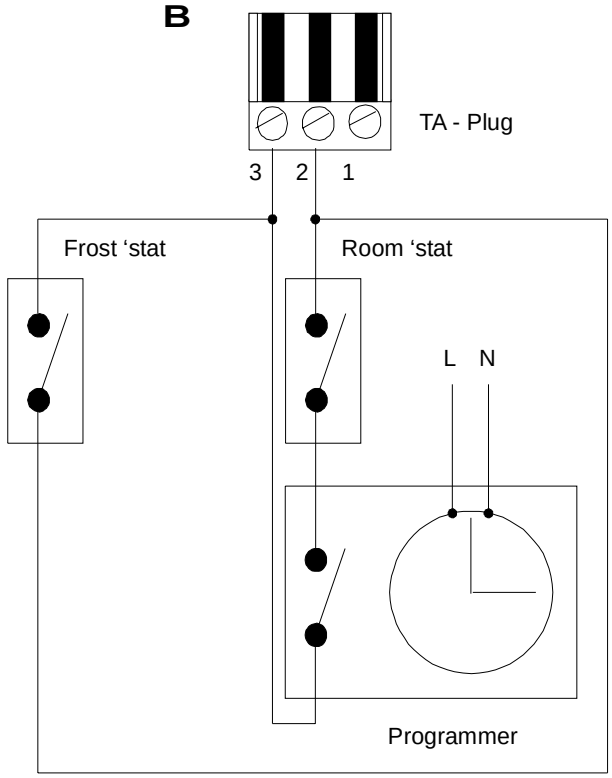

31 PICTORIAL WIRING DIAGRAM

LEGEND

b	-	blue.	**y/g**	-	yellow/green.
bk	-	black.	**gr**	-	green.
br	-	brown.	**or**	-	orange.
r	-	red.	**v**	-	violet.
w	-	white.	**gy**	-	grey.

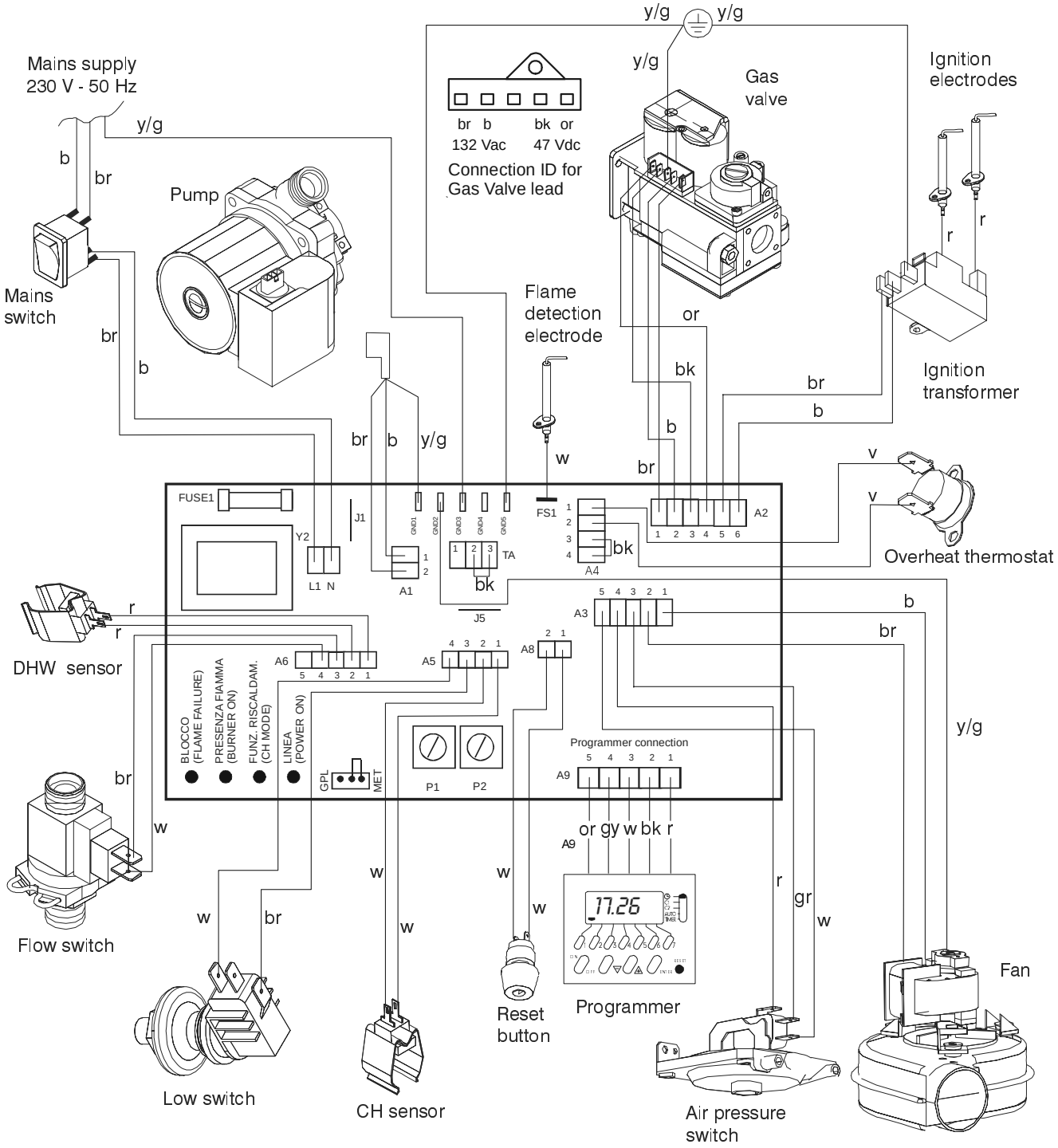

32 FUNCTIONAL FLOW WIRING DIAGRAM

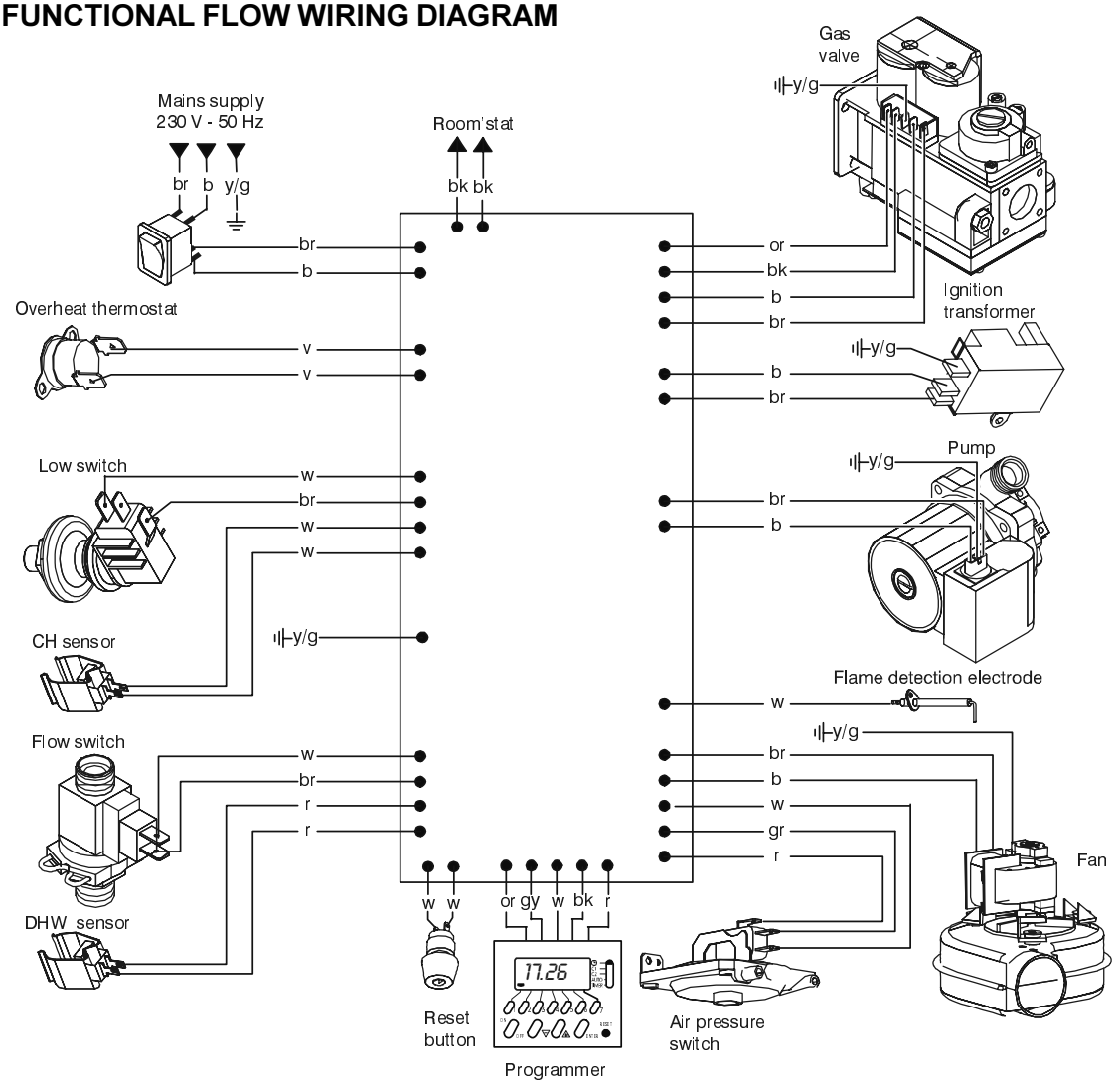

LEGEND

b - blue.	**br** - brown.	**w** - white.	**gr** - green.	**v** - violet.
bk - black.	**r** - red.	**y/g** - yellow/green.	**or** - orange.	**gy** - grey.

33 COMMISSIONING AND TESTING

A. Electrical Installation

1. Checks to ensure electrical safety should be carried out by a competent person.
2. ALWAYS carry out the preliminary electrical system checks, i.e. earth continuity, polarity, resistance to earth and short circuit, using a suitable test meter.

B. Gas Installation

1. The whole of the gas installation, including the meter, should be inspected and tested for soundness and purged in accordance with the recommendations of BS. 6891.
2. Purge air from the gas installation by approved methods only.
3. Retighten the union and test for gas soundness.

WARNING. **Whilst effecting the required gas soundness test and purging air from the gas installation, open all windows and doors, extinguish naked lights and *DO NOT SMOKE.***

34 INITIAL LIGHTING

LEGEND

- **A.** Automatic air vent.
- **B.** Reset button
- **C.** Fault led
- **D.** Flame led
- **E.** CH mode led
- **F.** Mains On led
- **G** CH thermostat knob
- **H.** DHW thermostat knob
- **I.** Programmer
- **J.** Boiler On/Off switch
- **L.** Inlet pressure test point
- **M.** Burner pressure test point
- **N.** CH flow
- **O.** DHW outlet
- **P.** Gas inlet
- **Q.** DHW inlet
- **R.** CH return
- **S.** Pressure gauge
- **T.** Manual air vent

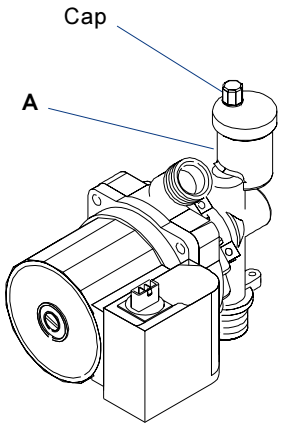

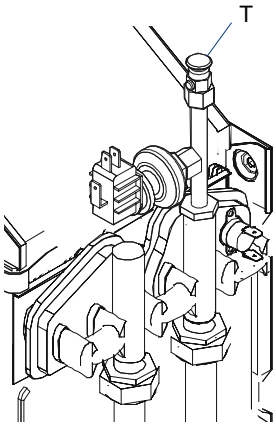

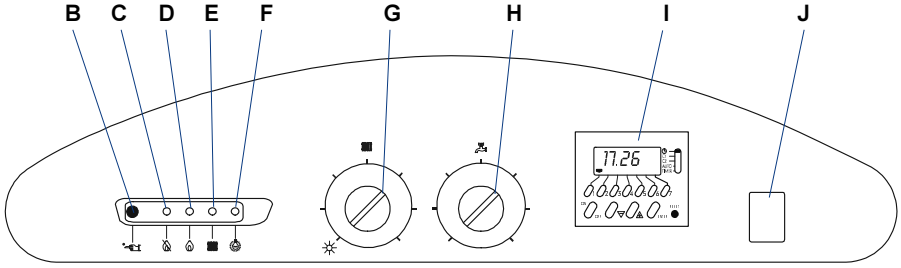

Control panel
The user panel is equipped with two regulation knobs and the CH knob has a double function.
In the minimum position (turn all LHS), the boiler works only in DHW mode (summer position); between first line and maximum position (turn all RHS), the boiler works in DHW and CH mode (winter position).

1. Remove the casing. Refer to frame 41.
2. Remove the expansion vessel and vertical protection shield/air guide utilising a screwdriver for opening the clips and hang the expansion vessel on the side boiler position.
3. Check that the system has been filled and carry out the following procedure to remove air from the boiler and system:

   i) Ensure the automatic air vent cap (A) is open.

   ii) Open the manual air vent situated at the top of the heat exchanger to expel any air in the heat exchanger, taking care to collect any residual water expelled.

   iii) Set the boiler thermostat to maximum and set the boiler on/off switch (J) to ON. The boiler should go through its ignition sequence until the burner is established.

   iv) Run the boiler for a few minutes and then set the DHW thermostat knob (H) to maximum and fully open a DHW tap.

   v) Once again open the manual air vent to expel all air from the heat exchanger. Particular care must be taken as any residual water will be hot. Close manual air vent and switch boiler off.

   vi) It may be necessary to repeat the above to fully remove residual air.

4. Check that all the drain cocks are closed and that the CH and DHW isolating valves are OPEN.
5. Check that the electrical supply is OFF.
6. Check that the boiler ON/OFF switch (I) is off.
7. Check that the gas service cock is OPEN.

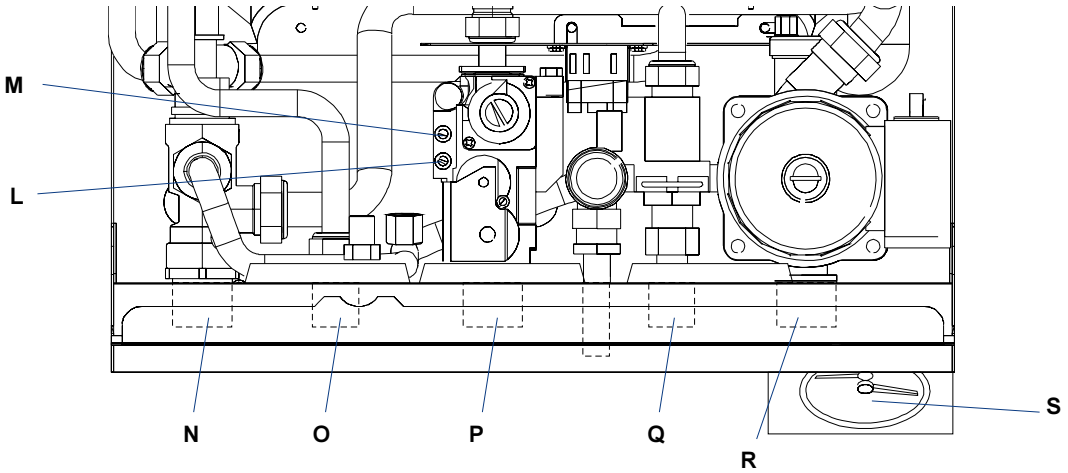

35 INITIAL LIGHTING - continued

8. Slacken the screw in the inlet pressure test point (L) and connect a gas pressure gauge via a flexible tube.
9. Switch the electricity supply ON and check all external controls are calling for heat.
10. **CENTRAL HEATING**

    Set the boiler thermostat knob to maximum and set the boiler ON - OFF switch to ON. The GREEN mains On and CH leds should now be illuminated. The boiler control should now go through its ignition sequence until the burner is established.
11. If the boiler does not light after 10 seconds, the RED lockout led is illuminated. Press the reset button and the boiler will repeat its ignition sequence. When the burner is established the GREEN 'Burner On' led will be illuminated.
12. **DOMESTIC HOT WATER**

    With the boiler firing, set the DHW thermostat knob (H) to maximum and fully open a DHW tap.

    The boiler should continue to run and CH led switch off.
13. Ensure that with the boiler operating the dynamic gas pressure is at least 17 mbar.
14. Turn off the DHW tap.
15. Set the boiler ON/OFF switch (J) to OFF.
16. Remove the pressure gauge and tube. Tighten the sealing screw in the pressure test point. Ensure a gas tight seal is made.

17. **CHECKING BURNER PRESSURE**

18. Slacken the screw in the burner pressure test point (C) and connect a gas pressure gauge via a flexible tube.
19. Set the boiler ON/OFF switch to ON.

Minimum pressure

20. Set the boiler heating control knob to maximum. The gas valve should open and ignition commence.
    If the boiler does not light, refer to the Fault Finding section.
21. Test for gas soundness around ALL boiler gas components, using leak detection fluid.
22. When the burner has ignited check the minimum burner pressure (refer to Table 2)
23. If necessary, correct the pressure by turning the adjusting screw 'D' anticlockwise to INCREASE the pressure or clockwise to DECREASE the pressure.
24. If the minimum burner pressure cannot be achieved by the above method, further adjustment can be made using the MIN.GAS potentiometer on the PCB. (refer to Frame 61).
25. Check the new setting pressure. Switch the boiler OFF then ON to check the pressure.

Maximum pressure

26. Set the DHW control knob to maximum and fully open a DHW tap to ensure adequate DHW flow (refer to Table 2).
27. Operate the boiler in this mode for 5 minutes to stabalise the burner temperature and check the maximum burner pressure (refer to Table 2).
28. The boiler is pre-set at the factory but if any adjustment is necessary proceed as follows:
    a. Remove the main burner adjuster cover.
    b. Turn the adjusting screw clockwise to INCREASE the pressure, or anticlockwise to DECREASE the pressure.
    c. Check the new setting pressure. Turn the DHW tap OFF and ON to check the pressure.
29. If necessary repeat steps 'a' to 'c' until the required burner pressure is achieved. Record this value in the Benchmark
30. Set the boiler ON/OFF switch to OFF.
31. Switch the electricity supply OFF.
32. Refit the main burner pressure adjuster cover.
33. Remove the pressure gauge and tube. Retighten the sealing screw in the pressure test point. Ensure a gas tight
34. Refit the vertical protection shield/air guide expansion vessel and casing (refer to frames 41 and 43).

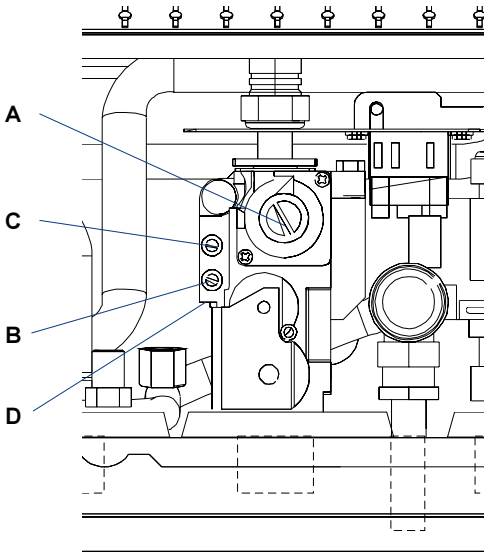

LEGEND

A. Main burner maximum pressure adjuster
B. Inlet pressure test point
C. Burner pressure test point
D. Main burner minimum pressure adjuster

36 GENERAL CHECKS

Make the following checks for correct operation in:
DOMESTIC HOT WATER (DHW) MODE

1. With no call for CH or DHW the boiler is in stand-by mode.

   Only the mains led is On.

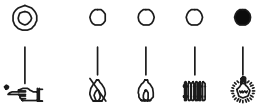

2. Fully open all DHW taps in turn and ensure that water flows freely from them.

   The flame led is On.

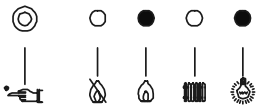

3. Close all taps except the furthest one from the boiler and check that the boiler is firing at maximum rate.

   This is factory set to give a DHW temperature rise of approximately 35°C at the following flow rate:

   - 11.5 l/min for **europa 28**
   - 10.0 l/min for **europa 24**

4. Reduce the DHW draw-off rate to about 3 l/min (0.7 gpm) and check that the boiler modulates to deliver DHW at approximately 62°C.

5. Close the DHW tap and check that the main burner extinguishes.

   The pump should overrun for a few seconds but the flame led is Off immediately.

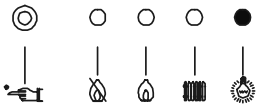

Note. On systems in excess of 2 bar inlet pressure a water pressure governor may be required to prevent water noise.

Make the following checks for correct operation in:
CENTRAL HEATING (CH) & DOMESTIC HOT WATER (DHW) MODE.

1. Ensure that the CH external controls are calling for heat, and the CH adjustor is in middle position, the CH and flame leds are On.

   The display should read:

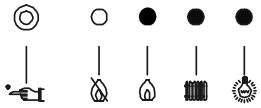

2. Fully open a DHW tap and check that hot water is delivered.

   The CH led is Off,
   and flame led is On.

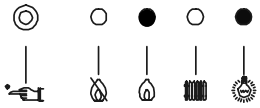

3. **Gas Rate**

   Check the boiler gas rate when the boiler is at full DHW output.

   The gas rate will normally be between:

europa 24	22.2 to 46.8	litres per minute
	0.8 to 1.6	cu/ft per minute
europa 28	25.2 to 54.6	litres per minute
	0.9 to 1.9	cu/ft per minute

checked at the gas meter, with no other appliance in use.

4. Close the DHW tap. The burner should go off and the pump continue to run.

   The CH led is On.

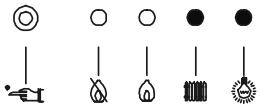

   After few seconds the burner should relight, to supply central heating, if there is a request for it.

37 GENERAL CHECKS - continued

5. Set the central heating external controls to OFF. The burner should go off and the pump continue to run for a 5 minutes.

   The CH led in Off.

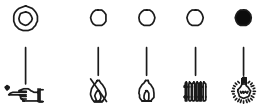

6. Check the correct operation of the programmer (if fitted) and all other system controls. Operate each control separately and check that the boiler operates correctly

WATER TEMPERATURES

The design water output temperatures are as follows:

Central Heating 82 °C maximum
Domestic Hot Water 62 °C maximum

Lower temperatures can be selected via the CH and DHW thermostats (G and H, see frame 34).

Knob Setting	CH Flow Temp °C (°F)	DHW Outlet Temp °C (°F)
Max	82 (180)	62 (144)
Min	45 (113)	40 (104)

WATER CIRCULATION SYSTEM

1. With the system COLD, check that the initial pressure is correct to the system design requirements.

   For pre-pressurised systems, this should be 1.0 bar.

2. With the system HOT, examine all water connections for soundness. The system pressure will increase with temperature rise but should not exceed 2.5 bar.

3. With the system still hot, turn off the gas, water and electricity supplies to the boiler and drain down to complete the flushing process.

Note. *A flushing solution should be used during the flushing procedure. Flushing solutions, Fernox Superfloc, Sentinel X300 (new systems) or X400 (existing systems). Refer to Frame 6.*

4. Refill and vent the system, add inhibitor (see Frame 6), clear all air locks and again check for water soundness. Affix the water treatment warning label, supplied in the hardware pack, in a *prominent position* on the system, to prevent the use of incorrect water treatment additives.

5. Reset the system initial pressure to the design requirement.

6. Balance the system. Refer to Frame 5.

7. Finally, set the controls to the User's requirements.

Note. *The pump will operate briefly as a self-check, once every 24 hours regardless of system demand.*

38 HANDING OVER

After completing the installation and commissioning of the system the installer should hand over to the householder by the following actions:

1. Hand the User Instructions to the householder and explain his/her responsibilities under the relevant national regulations.

2. Explain and demonstrate the lighting and shutting down procedures.

3. The operation of the boiler and the use and adjustment of all system controls should be fully explained to the householder, to ensure the greatest possible fuel economy consistent with the household requirements of both heating and hot water consumption.

   Advise the User of the precautions necessary to prevent damage to the system and to the building, in the event of the system remaining inoperative during frosty conditions.

4. Explain the function and the use of the boiler heating and domestic hot water controls.

5. Explain the function of the boiler fault mode.

   Emphasise that if a fault is indicated, the boiler should be turned off and a registered local heating installer consulted.

6. Explain and demonstrate the function of time and temperature controls, radiator valves etc., for the economic use of the system.

7. If a programmer is fitted then draw attention to the Users Instructions and hand them to the householder.

8. **Loss of system water pressure**

   Explain that the dial on the control panel indicates the central heating system pressure and that if the normal COLD pressure of the system is seen to decrease over a period of time then a water leak is indicated. In this event a registered local heating installer should be consulted.

WARNING.
Do not fire the boiler if the pressure has reduced to zero from the original setting.

9. **After installation, commissioning and customer hand-over instructions please complete the benchmark appliance log book and leave this with the customer.**

10. **IMPORTANT**
    A comprehensive service should be carried out ANNUALLY.

    Stress the importance of regular servicing by a Corgi registered installer.
    As the installer you may wish to undertake the service contract yourself or alternatively offer to the customer the benefits of the Ideal Care Scheme details of which are outlined in the householder pack supplied with this boiler.

39 SERVICING SCHEDULE

To ensure the continued safe and efficient operation of the appliance it is recommended that it is checked at regular intervals and serviced as necessary. The frequency of servicing will depend upon the installation condition and usage but should be carried out at least annually.

It is the law that any service work must be carried out by a registered CORGI installer.

1. Light the boiler and operate for at least 10 minutes. Check the gas consumption (refer to table 2).
2. Connect a suitable gas analyser to the sampling point on the flue turret.
   For correct boiler operation, the CO/CO_2 content of the flue gas should not be greater than 0.004 ratio.
   If this is the case, and the gas input is at least 90% of the nominal, then no further action need be taken. If not, proceed to Step 3 but see note above.
3. Switch OFF the electrical supply.
4. Remove the casing (refer to frame 41).
5. Remove the expansion vessel and vertical protection shield (refer to frame 43).
6. Clean the main burner (refer to frame 46).
7. Clean the heat exchanger (refer to frame 47).
8. Check the main injector for blockage or damage (refer to frame 52).
9. Check that the flue terminal is unobstructed and that the flue system is sealed correctly. Reassemble in the reverse order.

WARNING. **Always turn OFF the gas supply at the gas service cock, and switch OFF and disconnect the electricity supply to the appliance before servicing.**

IMPORTANT.

10. After completing the servicing or exchange of components always test for gas soundness and carry out functional checks in 2 and 3 above.
11. When work is complete the sealing panel MUST be correctly refitted, ensuring that a good seal is made.
12. Complete the service section in the Benchmark log book.

40 SAMPLING POINT

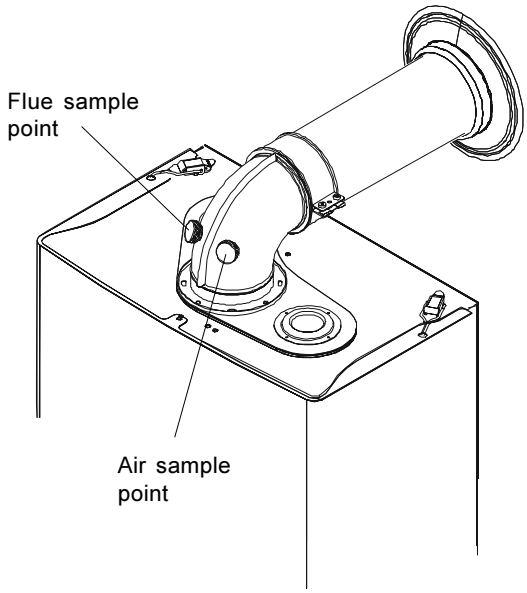

41 BOILER CASING REMOVAL

1. Undo the upper front retaining screw (A).
2. Undo the LH and RH side nuts and locking nut retaining the plastic fascia board (B), remove and place on one side.
3. Release the four fixing clamps on the upper and lower positions (2 + 2) (C).
4. Lift and remove casing (D).
5. Place the removed casing to one side to avoid damage.

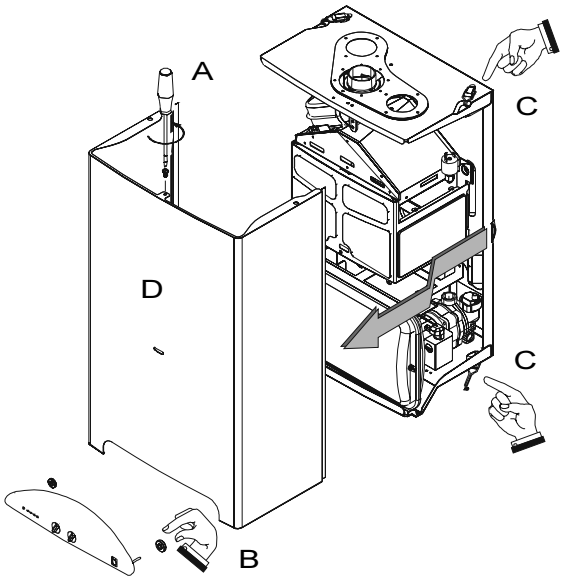

42 CONTROL HOUSING ACCESS

1. Remove the casing (see Frame 41).
2. Remove the 3 screws keeping the control housing in place.
3. Pull down and swing the housing.

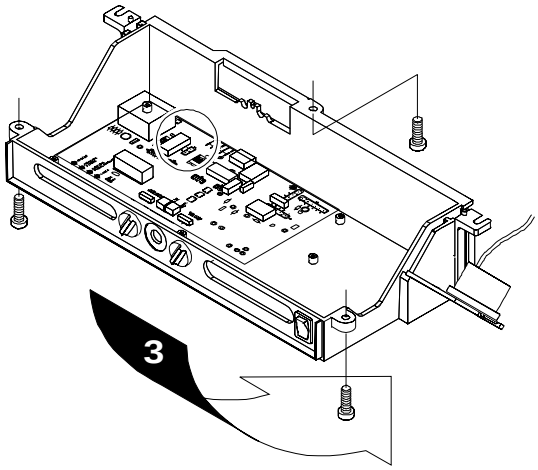

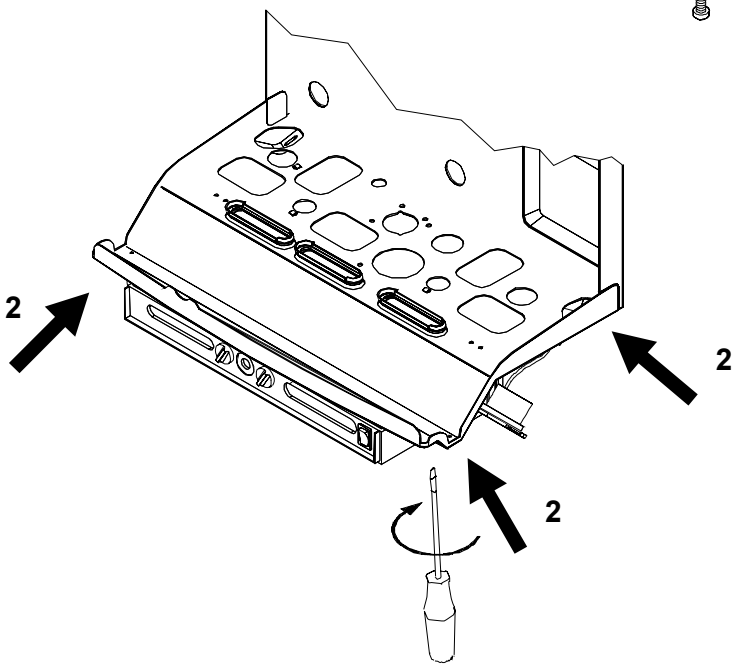

43 EXPANSION VESSEL AND VERTICAL PROTECTION SHIELD REMOVAL

1. Remove the casing (refer Frame 41).
2. Lift and disconnect the two clips retaining the expansion vessel.
3. Lift off the expansion vessel from the protection shield and hang it on the frame bottom.
4. Remove the two clips retaining the vertical protection shield and remove it (only for 24 kW).
5. Disconnect the wiring from the ignition transformer, remove the 3 screws securing the air guide to the main chassis and remove the air guide (only for 28 kW).

Note.
Take care not to disturb the expansion vessel flexible pipe.

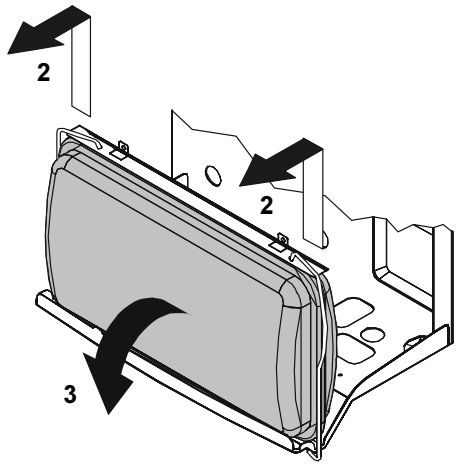

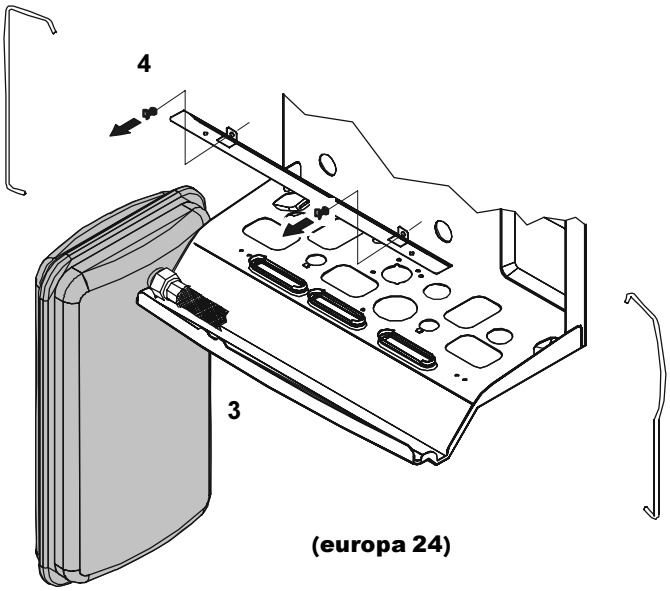

(europa 24)

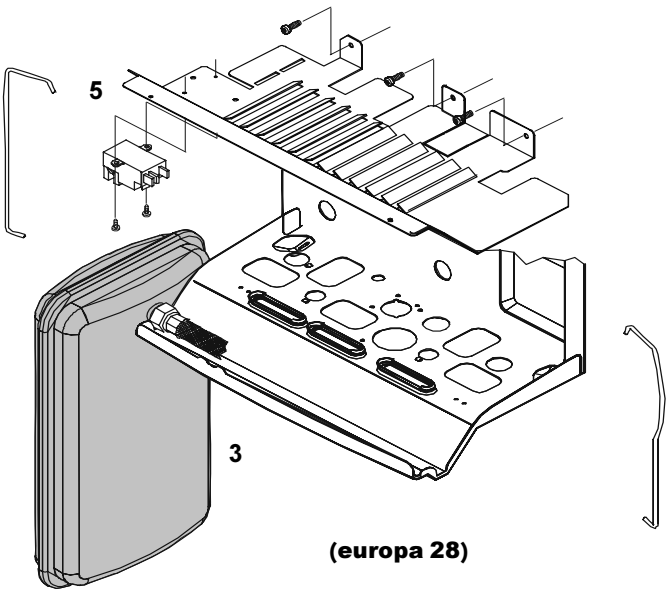

(europa 28)

44 DRAINING THE BOILER

1. Refer to Frame 49.
2. Remove the casing. Refer to Frame 41.
3. Remove the expansion vessel and shield/air guide. Refer to Frame 43.
4. Close all the water isolating valves on the inlet piping.
5. Open the safety valve.
6. **After replacing any component on the boiler, close the drain valve and open all system isolating valves before proceeding to check operation of the boiler.**

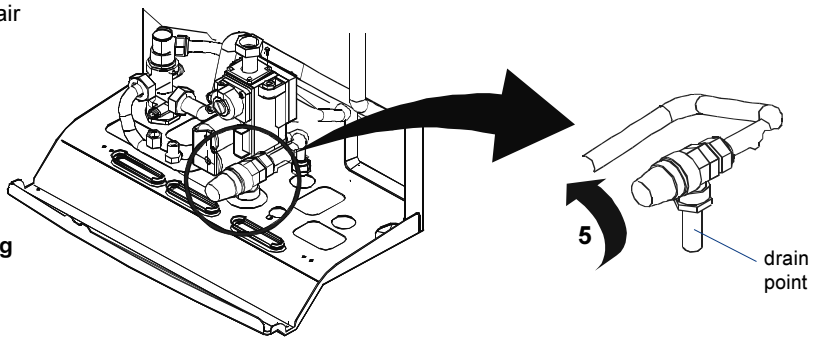

45 FAN ASSEMBLY REMOVAL AND CLEANING

1. Remove the casing (refer Frame 41).
2. Disconnect the electrical leads from the fan.
3. Undo the retaining screw on the fan mounting bracket.
4. Slide the fan forward and down and disengage from the fan outlet connector.
5. Clean with a soft brush.

Note.
Take care not to damage the fan impellor

6. Re-assemble in the reverse order, taking care to engage the rear locating lugs before enganging the fan outlet connector.

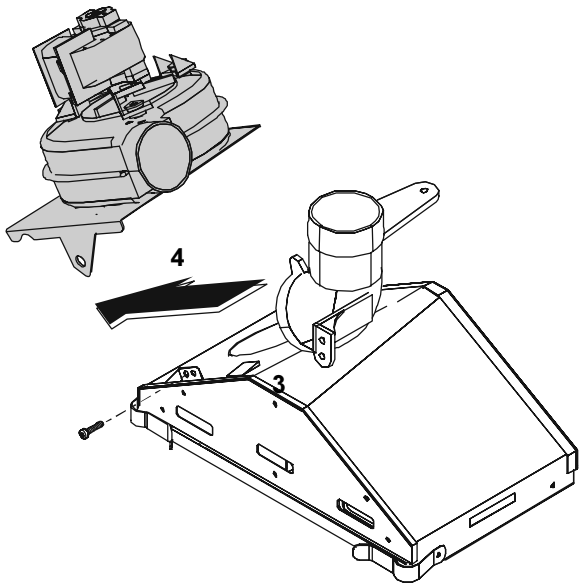

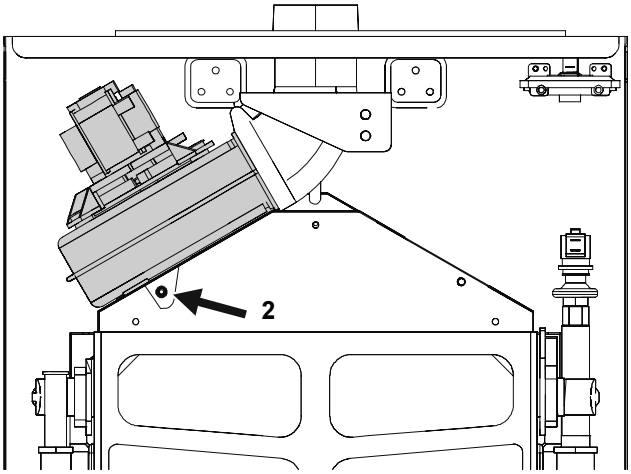

46 VENTURI REMOVAL AND CLEANING

1. Remove the casing (refer Frame 41).
2. Remove the fan assembly (refer Frame 45).
3. Disconnect the two silicon pipes from the venturi pipe.
4. Undo the screw fixing the flue outlet and remove it.
5. Undo the two plastic nuts fixing the venturi pipe and remove it from the bottom of the flue outlet.
6. Clean with a soft brush.
7. Re-assemble in the reverse order.

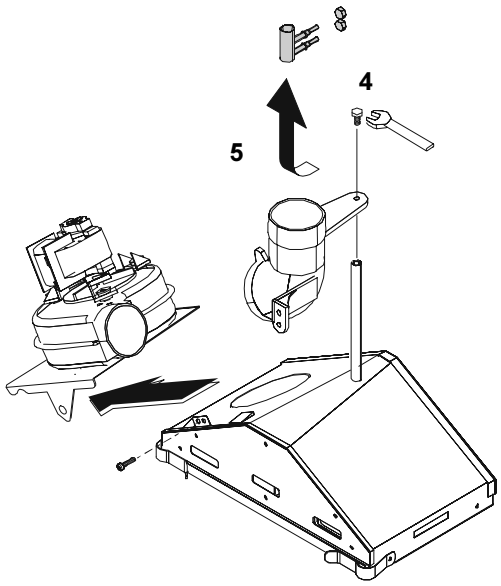

47 BURNER REMOVAL AND CLEANING

1. Undo and remove the 2 clips assembling the combustion chamber.
2. Remove the combustion chamber.
3. Disconnect the leads from ignition and ionisation electrodes including the earth lead.
4. Unscrew the nut off the gas burner pipe, then remove the 4 screws securing the burner.
5. Remove the burner from the combustion chamber.
6. Inspect the sealing gasket of the burner connection for any signs of damage. Replace if necessary.
7. Brush off any deposits using a soft brush.
8. Re-assemble in the reverse order.

Note.

Check the ignition and detection probes are in the correct position and re-connected.

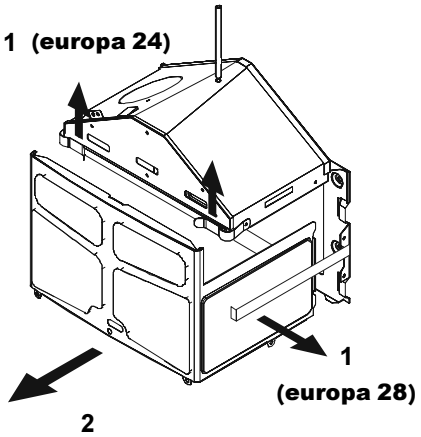

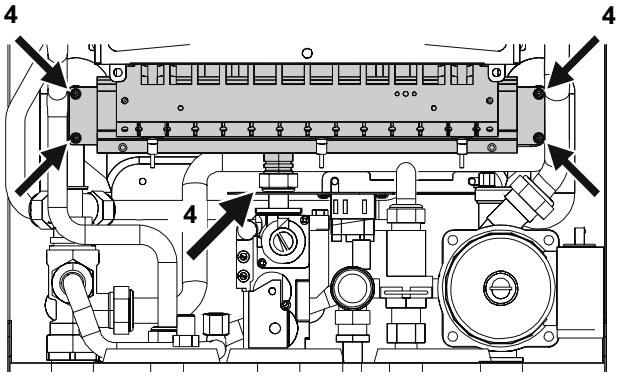

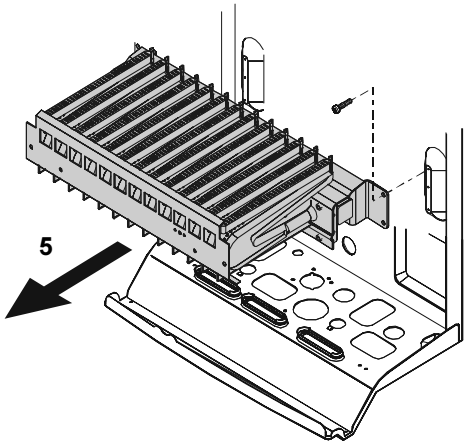

48 CLEANING THE HEAT EXCHANGER

1. Remove the combustion chamber (Refer Frame 47) and fan assembly (Refer to Frame 45).
2. Disconnect the electrical leads from the overheat thermostat and from low water pressure switch.
3. Unscrews the 3 screws and remove the front panel of the collector hood.
4. Remove the heat exchanger baffle by pulling forwards.
5. Brush off any deposits using a soft brush.
6. Re-assemble in reverse order.

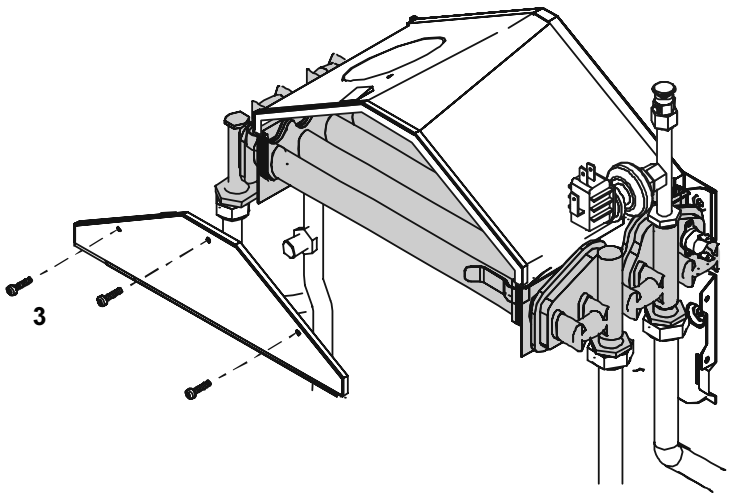

49 REPLACEMENT OF COMPONENTS

GENERAL

When replacing ANY component

1. Isolate the electricity supply.
2. Turn off the gas supply.
3. Remove the casing, refer to Frame 41.
4. If it is necessary to drain the boiler, refer to Frame 44.

After replacing ANY component check operation of the boiler including gas soundness, gas rate and combustion test.

IMPORTANT.
When work is complete, if the sealing panel has been removed, it must be correctly refitted - ensuring that a good seal is made.

THE BOILER MUST NOT BE LEFT IN AN OPERATIONAL CONDITION IF THE SEALING CASING IS NOT FITTED

50 C.H. AND D.H.W. SENSOR REPLACEMENT

1. Refer to Frame 49.
2. Remove the casing. Refer to Frame 41.
3. Unplug the electrical leads from the sensors.
4. Withdraw the sensor.
5. Fit the new sensor, using the clip supplied.
6. Re-assemble in reverse order.

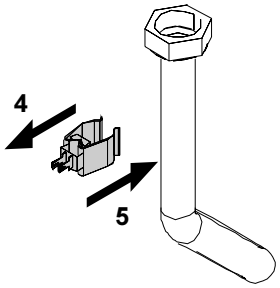

TABLE OF RESISTANCE VALUES AS A FUNCTION OF THE TEMPERATURE OF THE SENSORS

T°C	0	5
0	33242	25633
10	19947	15659
20	12394	9888
30	7947	6433
40	5242	4300
50	3548	2945
60	2459	2063
70	1740	1475
80	1256	1075
90	923	797
100	690	600

Relation between the temperature (°C) and nominal resistance (Ohm) of the CH and DHW sensors.
Example: At 25°C, the nominal resistance is 9888 Ohm
At 85°C, the nominal resistance is 1075 Ohm

51 FAN REPLACEMENT

1. Refer to Frame 49.
2. Remove the boiler casing. Refer to Frame 41.
3. Disconnect the electrical leads from the fan.
4. Undo the retaining screw(s) on the fan mounting bracket.
5. Slide the fan forward and down and disengage from the outlet connector.
6. Separate the fan from its mounting plate.
7. Re-fit the new fan in reverse order taking care not to overtighten the single retaining screws on the fan mounting plate, and engage the rear location lugs before engaging the fan outlet connector.

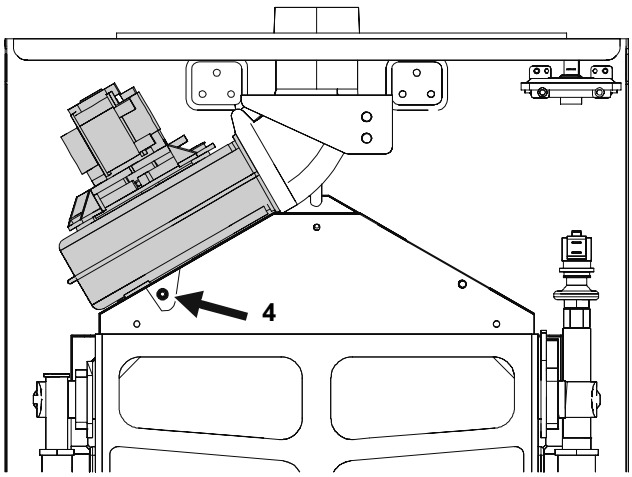

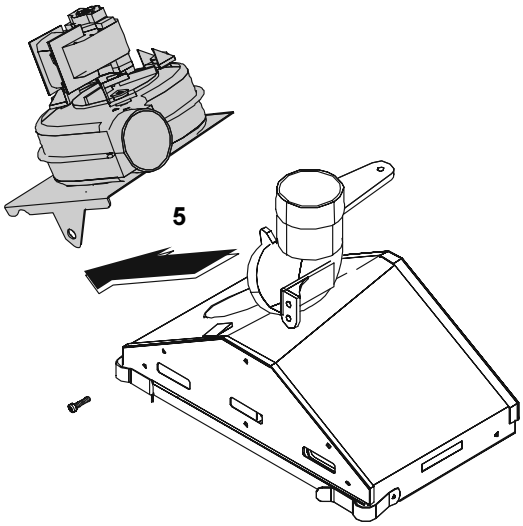

52 VENTURI REPLACEMENT

1. Refer to Frame 49.
2. Remove the fan assembly. Refer to Frame 45.
3. Remove the boiler casing. Refer to Frame 41.
4. Disconnect the two silicon pipes from the venturi pipe.
5. Undo the screw fixing the flue outlet and remove it.
6. Undo the two plastic nuts fixing the venturi pipe and remove it from of the bottom of the flue outlet.
7. Fit the new venturi pipe and re-assemble in the reverse order.

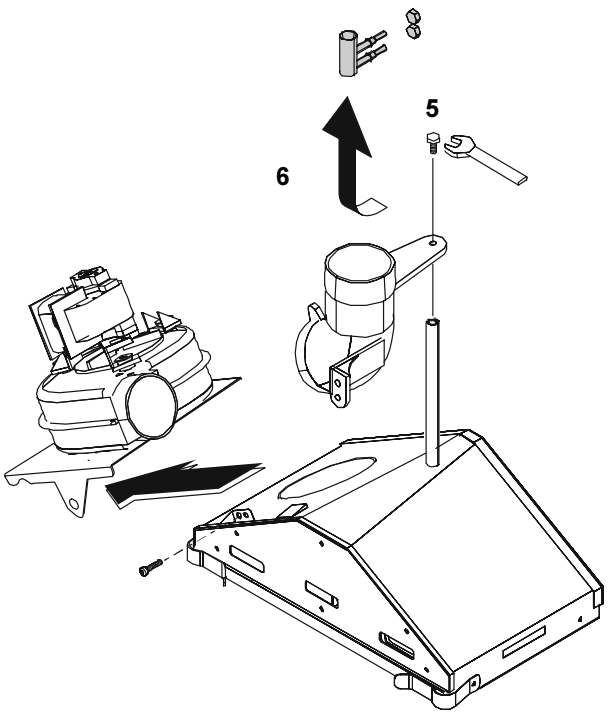

53 BURNER INJECTOR REPLACEMENT

1. Refer to Frame 49.
2. Remove the casing. Refer to Frame 41.
3. Remove the expansion vessel and shield/air guide. Refer to Frame 43.
4. Remove the combustion chamber. Refer to Frame 47.
5. Disconnect the electrical leads from the ignition/ionisation electrodes.
6. Undo and remove only the 4 screws illustrated securing the burner.
7. Remove the burner from the combustion chamber.
8. Unscrew the injectors.
9. Fit the new injectors complete with copper gaskets.
10. Re-assemble in reverse order.

Note.

Check that all of the injectors have been replaced and security tightened.

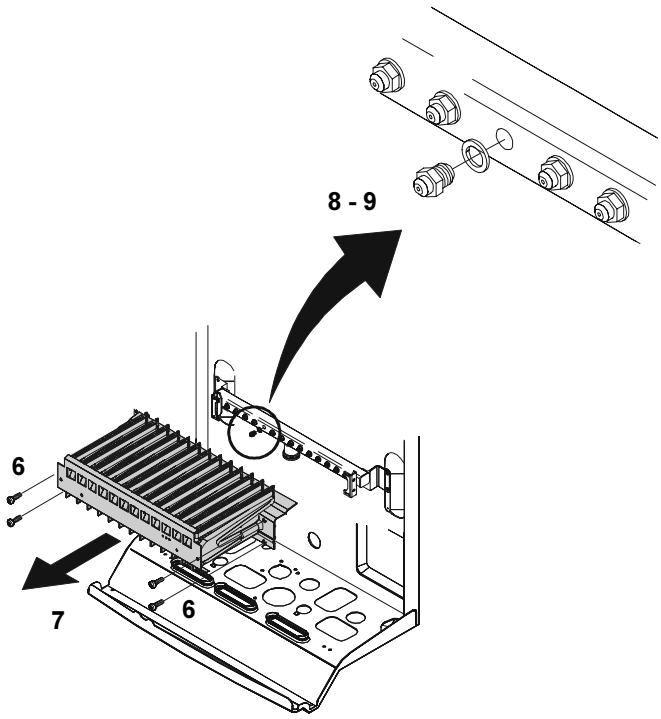

54 BURNER REPLACEMENT

1. Refer to Frame 49.
2. Remove the casing. Refer to Frame 41.
3. Remove the expansion vessel and shield/air guide. Refer to Frame 43.
4. Remove the combustion chamber. Refer to Frame 47.
5. Remove the ignition/ionisation electrodes. Refer to Frame 56.
6. Unscrew the nut of the burner gas pipe, then remove the 4 screws securing the burner.
7. Remove the burner from the combustion chamber.
8. Fit the new burner and re-assemble in reverse order, using a new gasket.

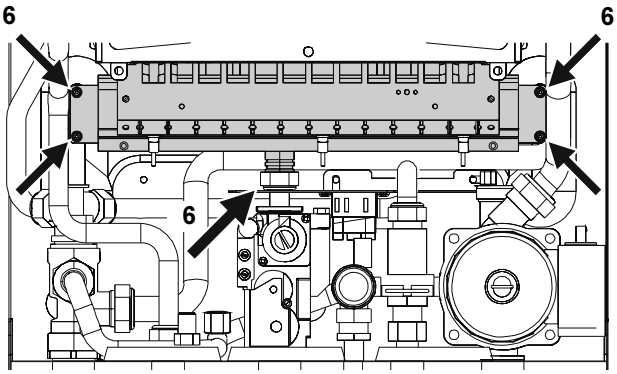

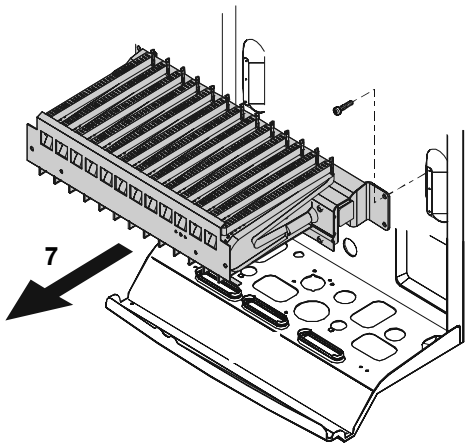

55 OVERHEAT THERMOSTAT REPLACEMENT

1. Refer to Frame 49.
2. Remove the casing. Refer to Frame 41.
3. Remove the electrical leads of the overheat thermostat.
4. Remove the combustion chamber. Refer to Frame 47.
5. Unclip the overheat thermostat from the heat exchanger.
6. Fit the new overheat thermostat.
7. Re-connect the electrical leads and re-assemble in reverse order ensuring that the spring clip is securely on the exchanger.

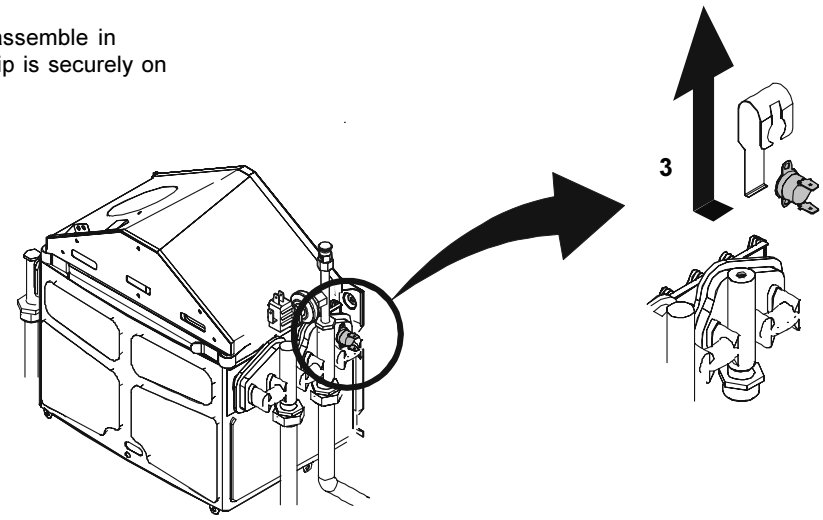

56 IGNITION/FLAME DETECTION ELECTRODES REPLACEMENT

1. Refer to Frame 49.
2. Remove the casing. Refer to Frame 41.
3. Remove the expansion vessel and shield/air guide. Refer to Frame 43.
4. Remove the combustion chamber. Refer to frame 47.
5. Disconnect the electrical leads from the ignition/ionisation electrodes.
6. Undo the single retaining screw holding the spark electrode to the burner.
7. Fit the new ignition/ionisation electrodes, check dimensions as shown.
8. Re-assemble in reverse order.

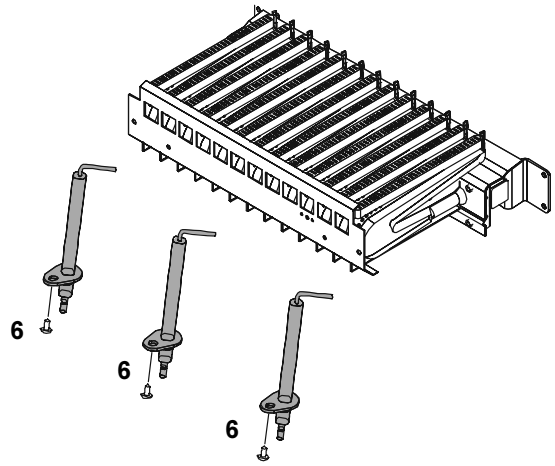

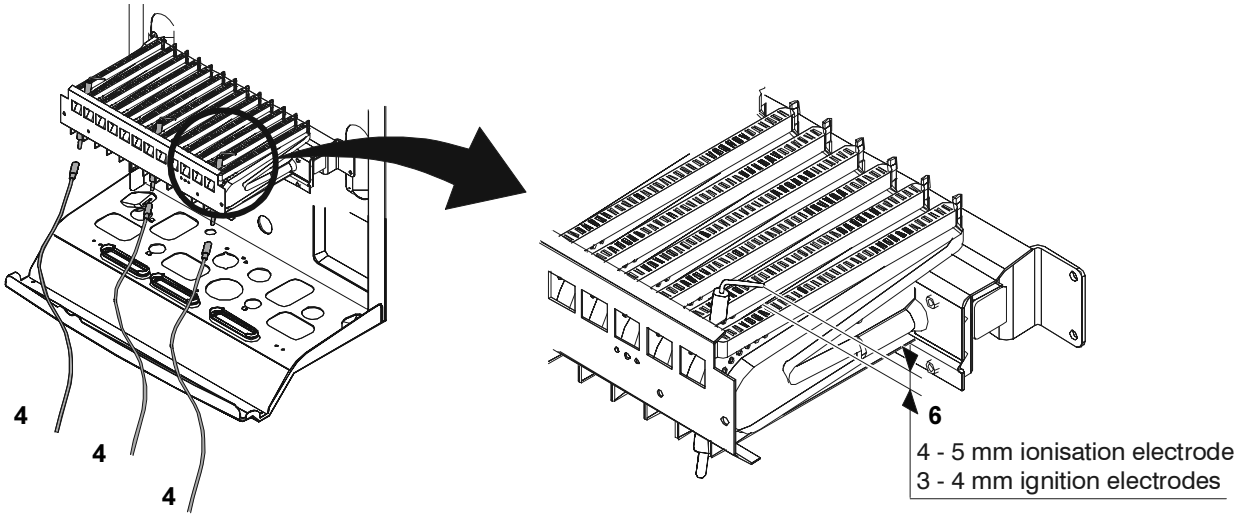

57 HEAT EXCHANGER REPLACEMENT

1. Refer to Frame 49.
2. Remove the casing. Refer to Frame 41.
3. Remove the expansion vessel and shield/air guide. Refer to Frame 43.
4. Unscrew 3 screws and remove front panel of the collector hood.
5. Remove the heat exchanger baffle by pulling forwards.
6. Remove the combustion chamber (Refer Frame 47).
7. Drain the CH and DHW circuit. Refer to frame 44.
8. Disconnect the electrical leads from the overheat thermostat and from low water pressure switch.
9. Unscrew the 4 nuts of the hydraulic circuit of the heat exchanger.
10. Pull the heat exchanger forwards from the flue gas manifold.
11. Fit the new heat exchanger and re-assemble in reverse order, using new seals if necessary.

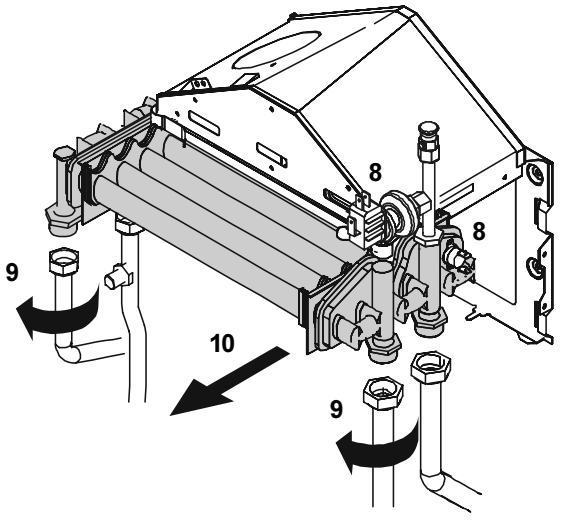

58 DIVERTER VALVE ACTUATOR REPLACEMENT

1. Refer to Frame 49.
2. Remove the casing. Refer to Frame 41.
3. Remove the expansion vessel and shield/air guide. Refer to Frame 43.
4. Isolate and drain the DHW and CH circuits. Refer to Frame 44.
5. Unscrew the two DHW pipe nuts.
6. Unscrew the two screws fixing the thermostatic actuator and pull it upwards.
7. Fit the new actuator and re-assemble in reverse order, using new seals if necessary.

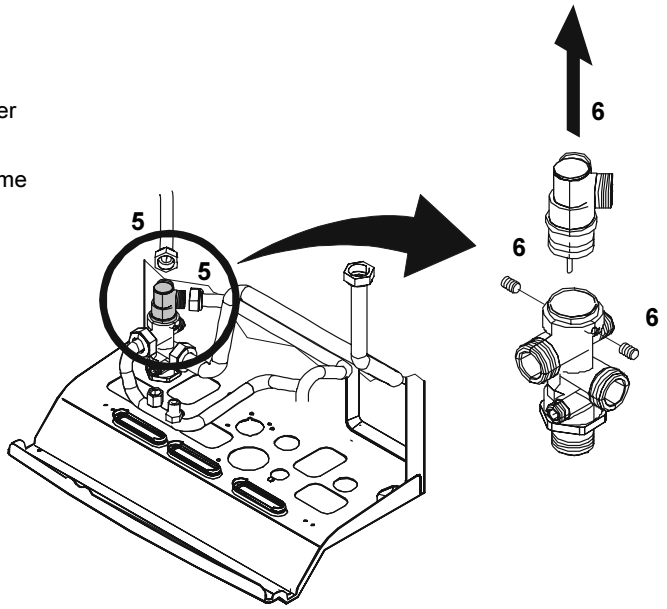

59 COMBUSTION CHAMBER INSULATION REPLACEMENT

The insulation boards used in the combustion chamber of this product are made of high temperature glass fibres with a binder of organic and inorganic materials.

Caradon Ideal Limited recommend that, for your own comfort and safety and to comply with good working practice, the procedure described below is followed:

1. Refer to Frame 49.
2. Remove the casing. Refer to Frame 41.
3. Remove the expansion vessel and shield. Refer to Frame 43.
4. Remove the combustion chamber. Refer to frame 47.
6. Remove the heat exchanger. Refer to Frame 57.
6. Remove the burner. Refer to Frame 54.

Prior to removal of the board the following protective equipment should be worn:

- **Face mask**
- **Gloves**

7. Pull down the two retaining brackets of the rear insulating chamber and remove it.
8. Open the retaining brackets of the combustion chamber and remove the front and sides insulation boards. The replacement boards are supplied in a plastic bag. This bag should be retained and the discarded boards should now be placed into it.
9. Fit new insulation boards.
10. Remove the gloves and face mask and place them in the plastic bag.
11. Wash your hands and any areas of skin which may have come into contact with any of the particles from the insulation board.
12. Re-assemble in reverse order.

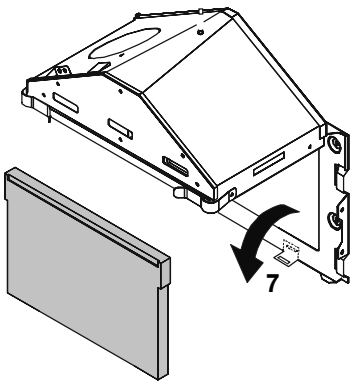

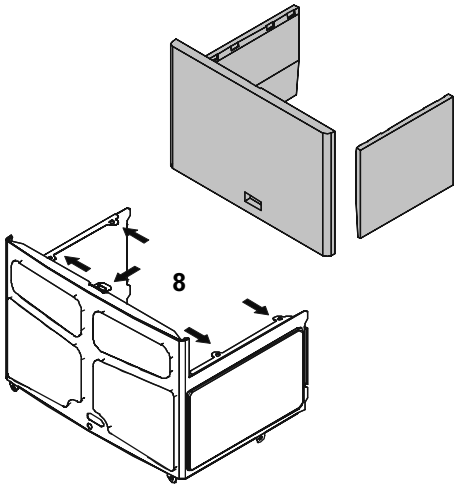

60 GAS CONTROL VALVE REPLACEMENT

1. Refer to Frame 49.
2. Remove the casing. Refer to Frame 41.
3. Remove the expansion vessel and shield/air guide. Refer to Frame 43.
4. Unscrew the securing screw and unplug the electrical lead from the gas control valve.
5. Unscrew the gascock hexagon nut from the gas valve; then unscrew the two screws fixing the gas valve placed at the bottom of the rear chassis.
6. Unscrew the burner gas pipe nut.
7. Extract the gas valve from the boiler.
8. Unscrew the four screws retaining the burner gas pipe.
9. Fit the new valve and re-assemble in reverse order, using new seals as necessary.
10. Unscrew the main burner minimum pressure adjuster. Refer to Frame 35 .
11. Check the operation of the boiler and adjust the maximum and minimum pressures as necessary. Refer to Frame 35.

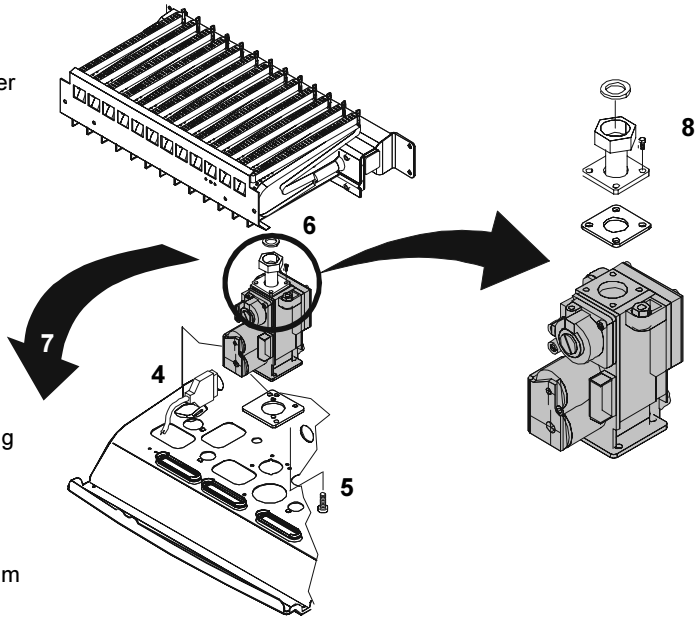

61 PCB REPLACEMENT

1. Refer to Frame 49.
2. Remove the casing. Refer to Frame 41.
3. Swing the control housing down into the servicing position. Refer to Frame 42.
4. Remove the two knobs. To remove also the two shafts it is necessary to squeeze the shaft ends with a pliers.
5. Unplug the electrical leads and low voltage leads from the PCB, unscrew the two screws and remove.
6. Fit the new PCB to the working position and secure with the two screws.
7. Adjust the P1 potentiometer to it's mid position.
8. Re-assemble in reverse order, ensuring that the PCB is located correctly in the housing before reconnecting the electrical wiring.
9. Check the operation of the boiler and adjust the maximum and minimum pressures as necessary (Refer to Frame 35)

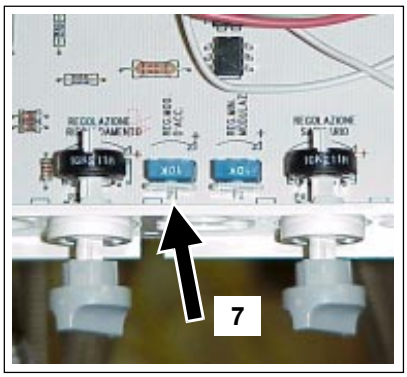

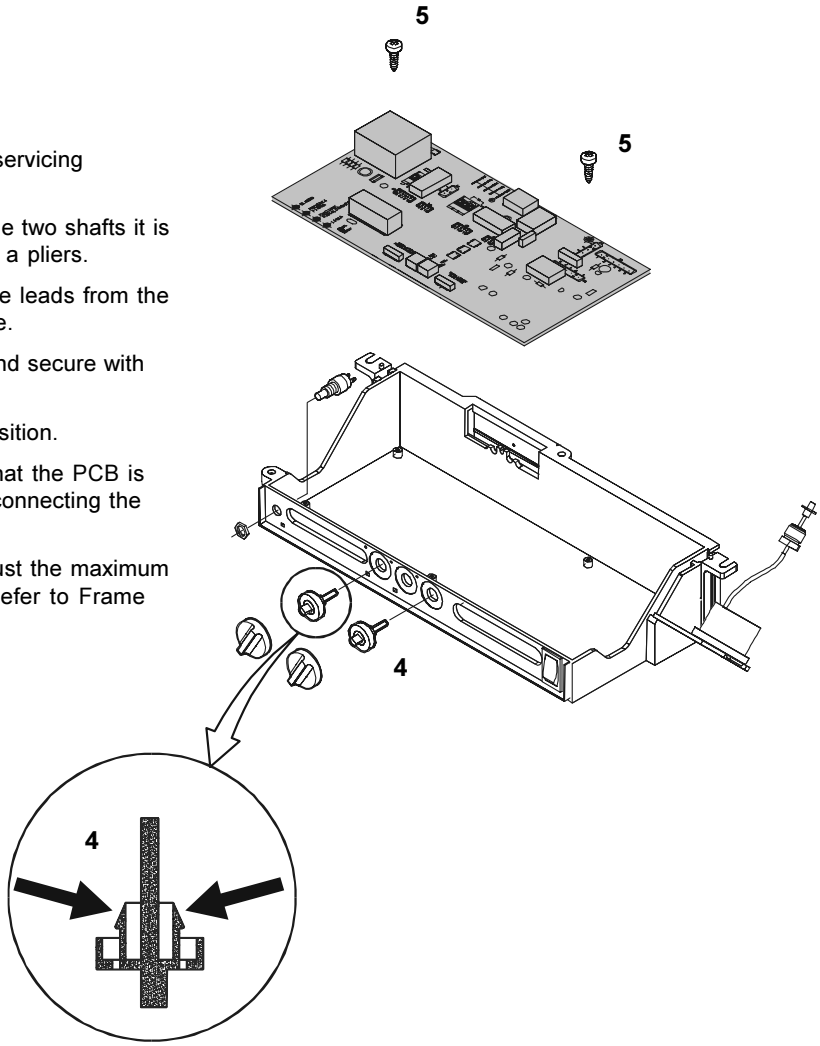

62 MAINS SWITCH REPLACEMENT

1. Refer to Frame 49.
2. Remove the casing. Refer to Frame 41.
3. Remove the securing screw fixing the mains switch.
4. Pull out the mains switch by squeezing the plastic retain clips at the back.
5. Disconnect the electrical leads from the mains switch.
6. Fit the new switch, ensuring that the electrical leads are replaced on the correct terminals and the plastic springs are correcty positioned.
7. Re-assemble in reverse order.

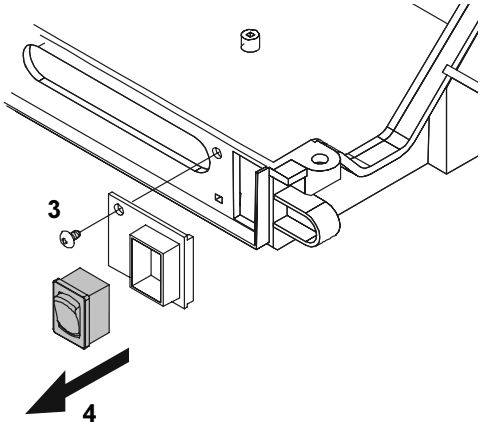

63 PRESSURE GAUGE REPLACEMENT

1. Refer to Frame 49.
2. Remove the casing. Refer to Frame 41.
3. Remove the expansion vessel and shield/air guide. Refer to Frame 43.
4. Drain the boiler. Refer to Frame 44.
5. Unclip the temperature sensor.
6. Unscrew the pressure gauge nut.
7. Swing the control housing into the service position.
8. Pull out the pressure gauge pipe and temperature sensor pipe from the rear frame and pull out the pressure gauge by squeezing the plastic retaining clips together at the back from the plastic bracket.
9. Reassemble in reverse order using new seals if necessary.
10. Refill and pressurise the system. Refer to Frames 4 and 28.

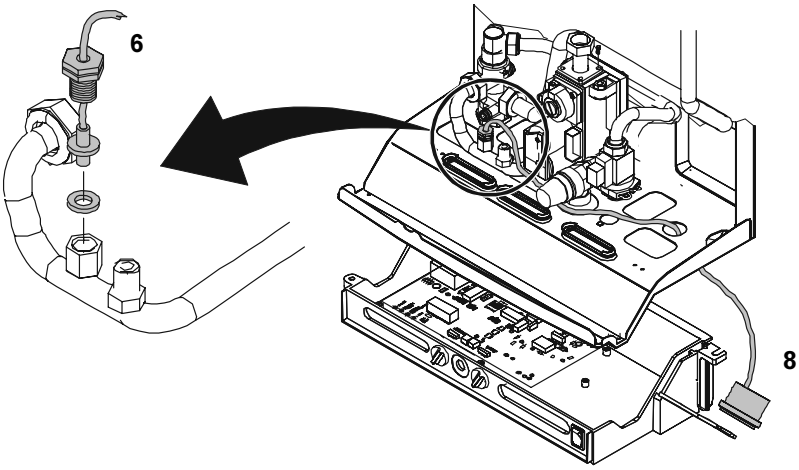

64 SAFETY RELIEF VALVE REPLACEMENT

1. Refer to Frame 49.
2. Remove the casing. Refer to Frame 41.
3. Remove the expansion vessel and shield/air guide. Refer to Frame 43.
4. Drain the boiler. Refer to Frame 44.
5. Remove the discharge pipe.
6. Unscrews the safety relief valve nut and remove it.
7. Fit the new safety valve and re-assemble in reverse order.
8. Reconnect the discharge pipe, using new seals if necessary.
9. Refill the boiler. Refer to Frames 4 and 28.

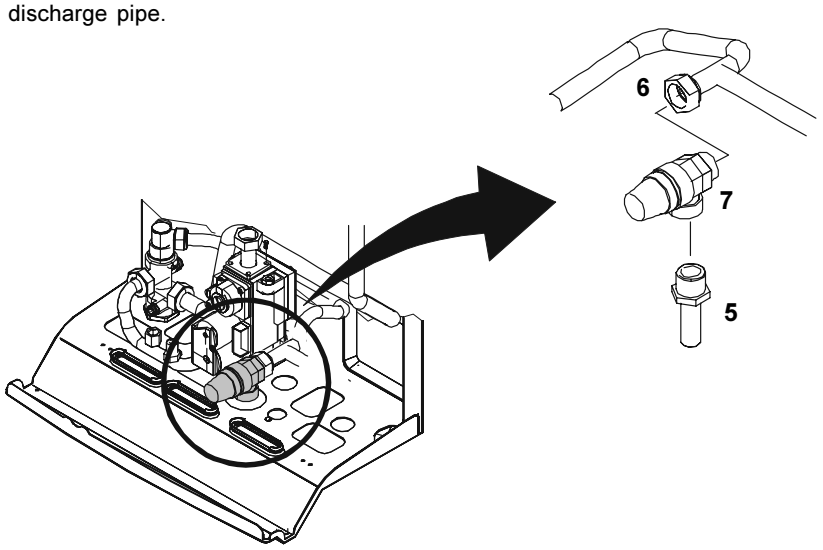

65 AUTOMATIC AIR VENT REPLACEMENT

1. Refer to Frame 49.
2. Remove the casing. Refer to Frame 41.
3. Remove the expansion vessel and shield/air guide. Refer to Frame 43.
3. Drain the boiler. Refer to Frame 44.
4. For **europa 24**:

   Unscrew the air vent from the CH return assembly and remove it.

   For **europa 28**:

   Pull out the air vent clip from the CH return assembly and pull up the air vent head.
5. Fit the new air vent, and re-assemble in reverse order.
6. Refill the boiler. Refer to Frames 4 and 28.

IMPORTANT.
Ensure that the vent cap is loose (A).

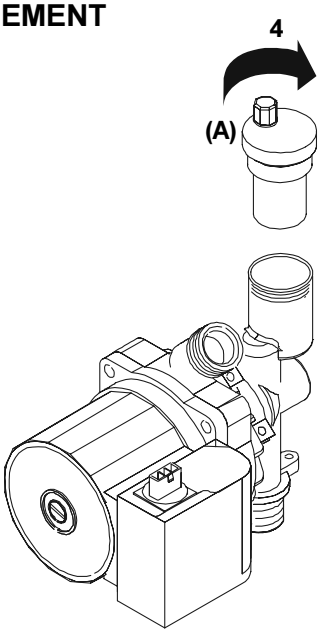

europa 24

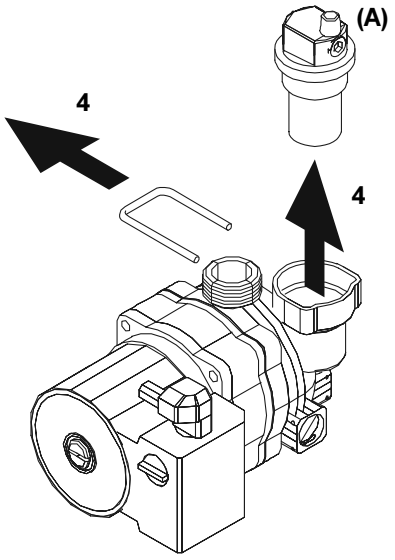

europa 28

66 PUMP HEAD REPLACEMENT

1. Refer to Frame 49.
2. Remove the casing. Refer to Frame 41.
3. Remove the expansion vessel and shield/air guide. Refer to Frame 43.
4. Drain the boiler. Refer to Frame 44.
5. Disconnect the electrical lead from the pump.
6. Remove the 4 Allen screws securing the pump head.
7. Remove the pump head.
8. Fit the new pump head.
9. Re-assemble in reverse order.
10. Refill the boiler. Refer to Frames 4 and 28.

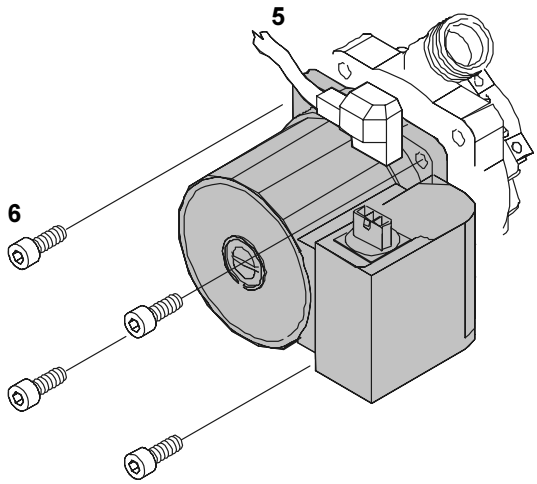

67 AIR PRESSURE SWITCH REPLACEMENT

1. Refer to Frame 49.
2. Remove the casing. Refer to Frame 41.
3. Disconnect the electrical lead from the air pressure switch.
4. Disconnect the two silicon pipes from the air pressure switch.
5. Unscrew the two screws and remove the air pressure switch.
6. Fit the new air pressure switch and re-assemble in reverse order.

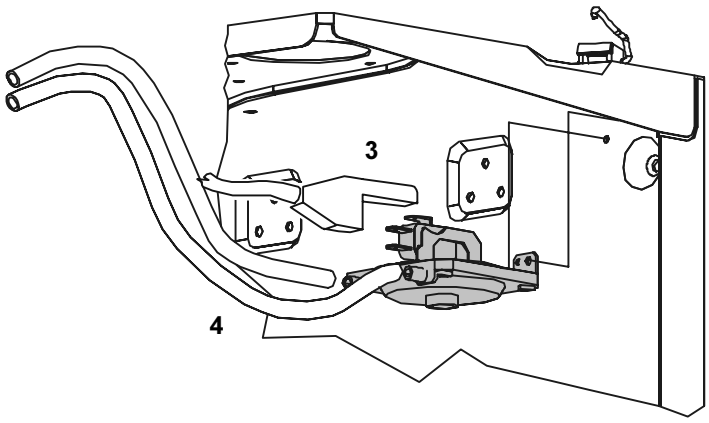

68 LOW WATER SWITCH REPLACEMENT

1. Refer to Frame 49.
2. Remove the casing. Refer to Frame 41.
3. Drain the boiler. Refer to Frame 44.
4. Disconnect the electrical lead from the low water switch.
5. Unscrew the low water switch nut and remove the switch.
6. Fit the new low water switch and re-assemble in reverse order, using a suitable sealant material.
7. Refill the boiler. Refer to Frames 4 and 28.

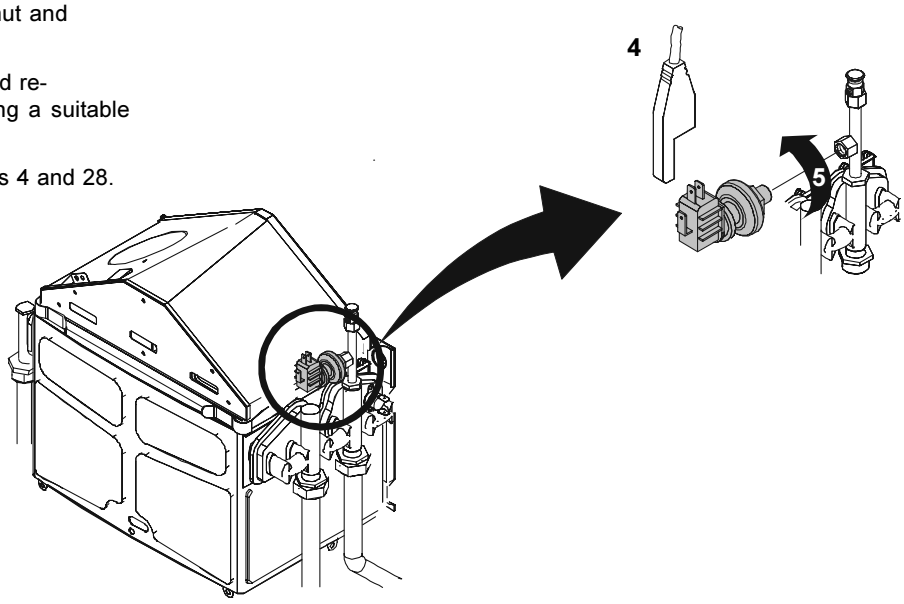

69 EXPANSION VESSEL REPLACEMENT

1. Refer to Frame 49.
2. Remove the casing. Refer to Frame 41.
3. Drain the boiler. Refer to Frame 44.
4. Undo the union nut on the vessel water flexible connection pipe.
5. Remove the expansion vessel. Refer to Frame 43.
6. Fit the new expansion vessel using the new sealing washer provided.
7. Re-assemble in reverse order.
8. Refill the boiler. Refer to Frames 4 and 28.

Note.

If preferred, and for convenience, a new expansion vessel may be installed on the return pipework elsewhere in the heating system providing it ensures equivalent system protection.

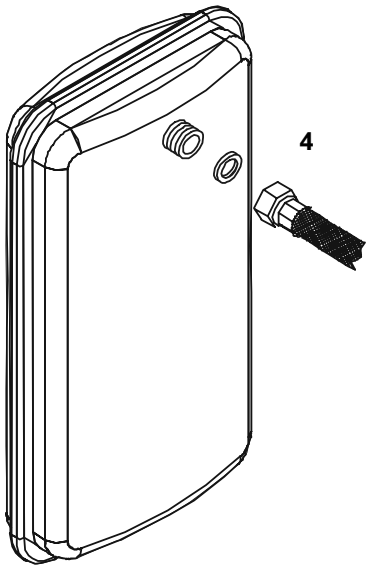

70 DHW FLOW SWITCH REPLACEMENT

1. Refer to Frame 49.
2. Remove the casing. Refer to Frame 41.
3. Remove the expansion vessel and shield/air guide. Refer to Frame 43.
4. Close the DHW inlet valve and open the DHW tap placed in the lowest position of the installation.
5. Disconnect the electrical lead from the flow switch.
6. Unscrew the upper and lower nut fixing the flow switch and remove it.
7. Fit the new flow switch and re-assemble in reverse order using the new seals provided.
8. Open the DHW inlet valve and close the DHW tap.

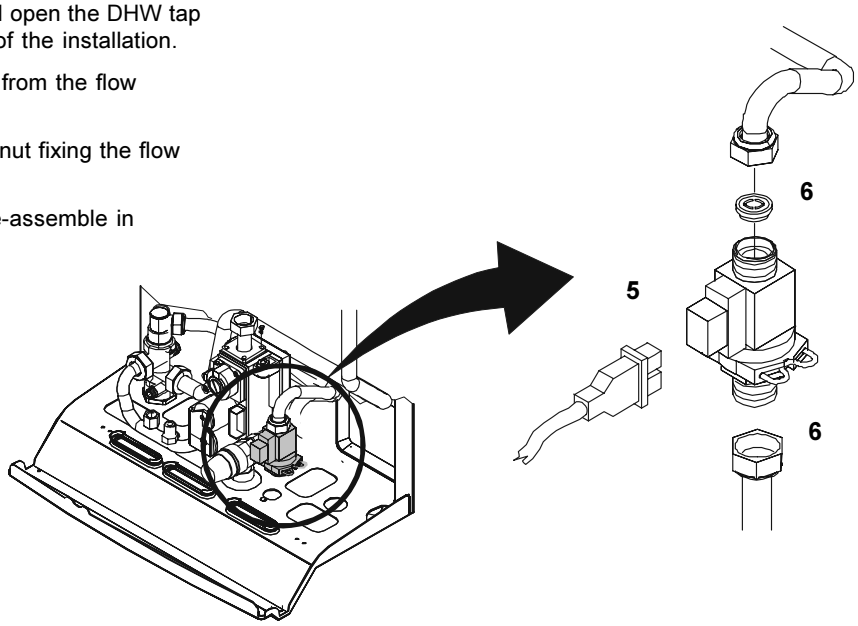

71 IGNITION TRANSFORMER REPLACEMENT

1. Refer to Frame 49.
2. Remove the casing. Refer to Frame 41.
3. Remove the expansion vessel and shield. Refer to Frame 43.
4. Disconnect the electrical leads from the ignition transformer.
5. Remove the screws securing the ignition transformer heat shield and remove the assembly
6. Unscrew the screw fixing the ignition transformer to the protection shield and remove it.
7. Refit the new ignition transformer and re-assemble in reverse order.

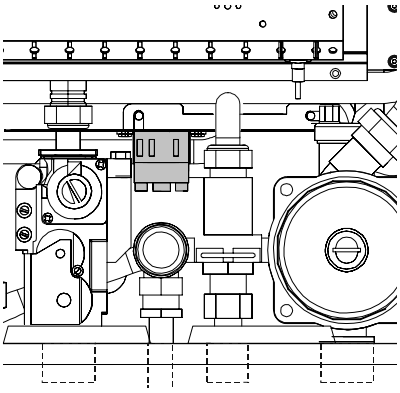

europa 24

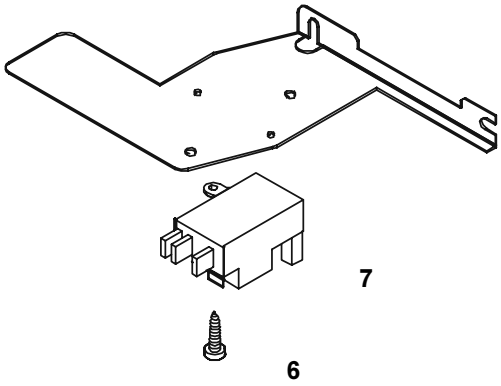

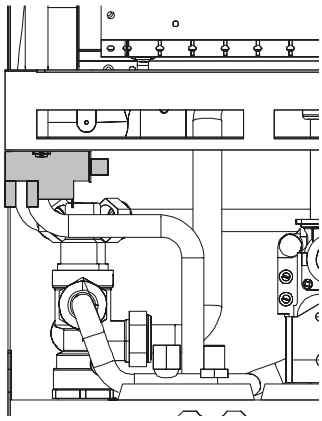

europa 28

72 FAULT FINDING

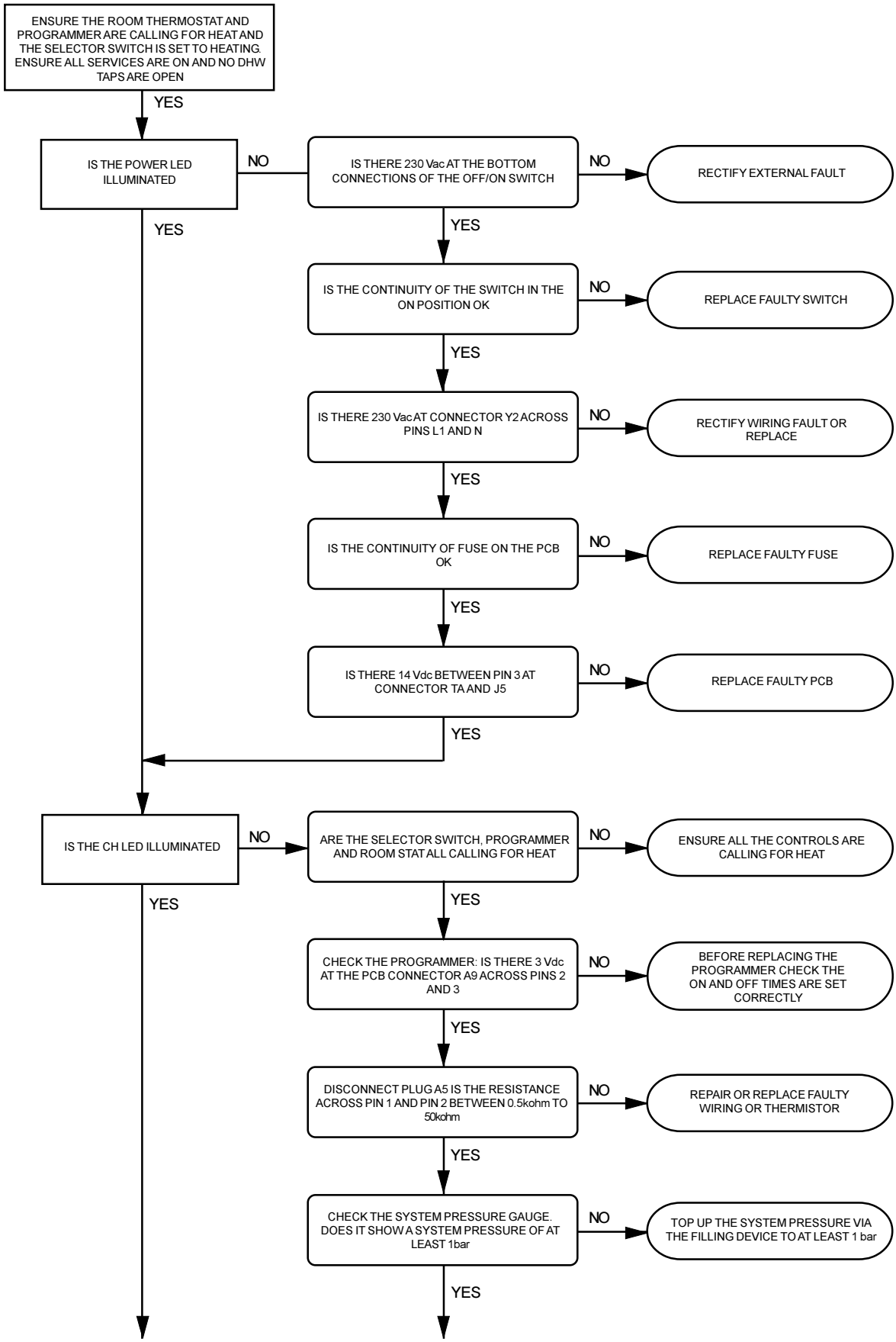

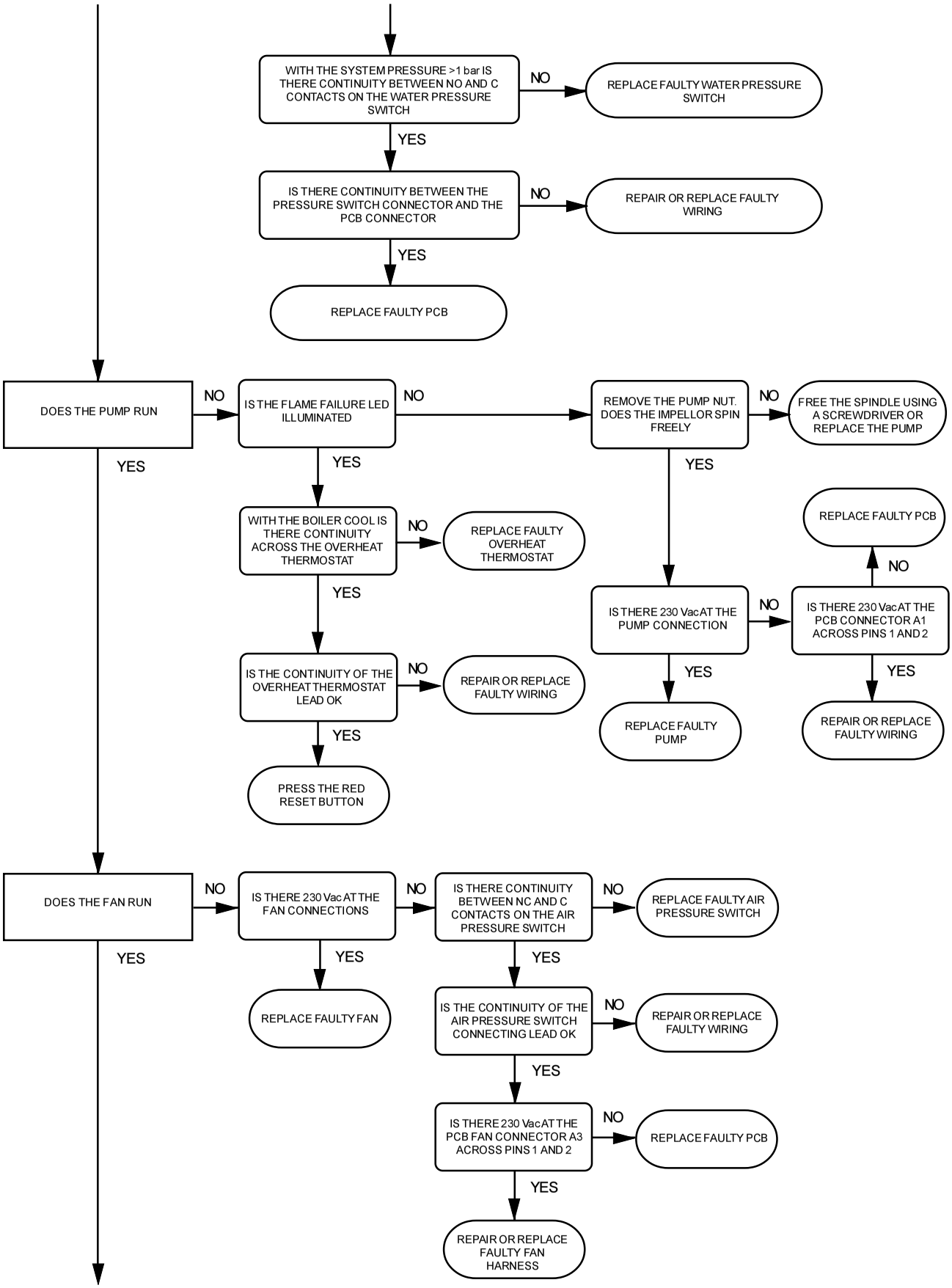
WITH THE SYSTEM PRESSURE >1 bar IS THERE CONTINUITY BETWEEN NO AND C CONTACTS ON THE WATER PRESSURE SWITCH
NO
REPLACE FAULTY WATER PRESSURE SWITCH
YES
IS THERE CONTINUITY BETWEEN THE PRESSURE SWITCH CONNECTOR AND THE PCB CONNECTOR
NO
REPAIR OR REPLACE FAULTY WIRING
YES
REPLACE FAULTY PCB
DOES THE PUMP RUN
NO
IS THE FLAME FAILURE LED ILLUMINATED
NO
REMOVE THE PUMP NUT. DOES THE IMPELLOR SPIN FREELY
NO
FREE THE SPINDLE USING A SCREWDRIVER OR REPLACE THE PUMP
YES
YES
YES
WITH THE BOILER COOL IS THERE CONTINUITY ACROSS THE OVERHEAT THERMOSTAT
NO
REPLACE FAULTY OVERHEAT THERMOSTAT
REPLACE FAULTY PCB
NO
YES
IS THERE 230 Vac AT THE PUMP CONNECTION
NO
IS THERE 230 Vac AT THE PCB CONNECTOR A1 ACROSS PINS 1 AND 2
IS THE CONTINUITY OF THE OVERHEAT THERMOSTAT LEAD OK
NO
REPAIR OR REPLACE FAULTY WIRING
YES
YES
YES
REPLACE FAULTY PUMP
REPAIR OR REPLACE FAULTY WIRING
YES
PRESS THE RED RESET BUTTON
DOES THE FAN RUN
NO
IS THERE 230 Vac AT THE FAN CONNECTIONS
NO
IS THERE CONTINUITY BETWEEN NC AND C CONTACTS ON THE AIR PRESSURE SWITCH
NO
REPLACE FAULTY AIR PRESSURE SWITCH
YES
YES
YES
REPLACE FAULTY FAN
IS THE CONTINUITY OF THE AIR PRESSURE SWITCH CONNECTING LEAD OK
NO
REPAIR OR REPLACE FAULTY WIRING
YES
IS THERE 230 Vac AT THE PCB FAN CONNECTOR A3 ACROSS PINS 1 AND 2
NO
REPLACE FAULTY PCB
YES
REPAIR OR REPLACE FAULTY FAN HARNESS

FAULT FINDING

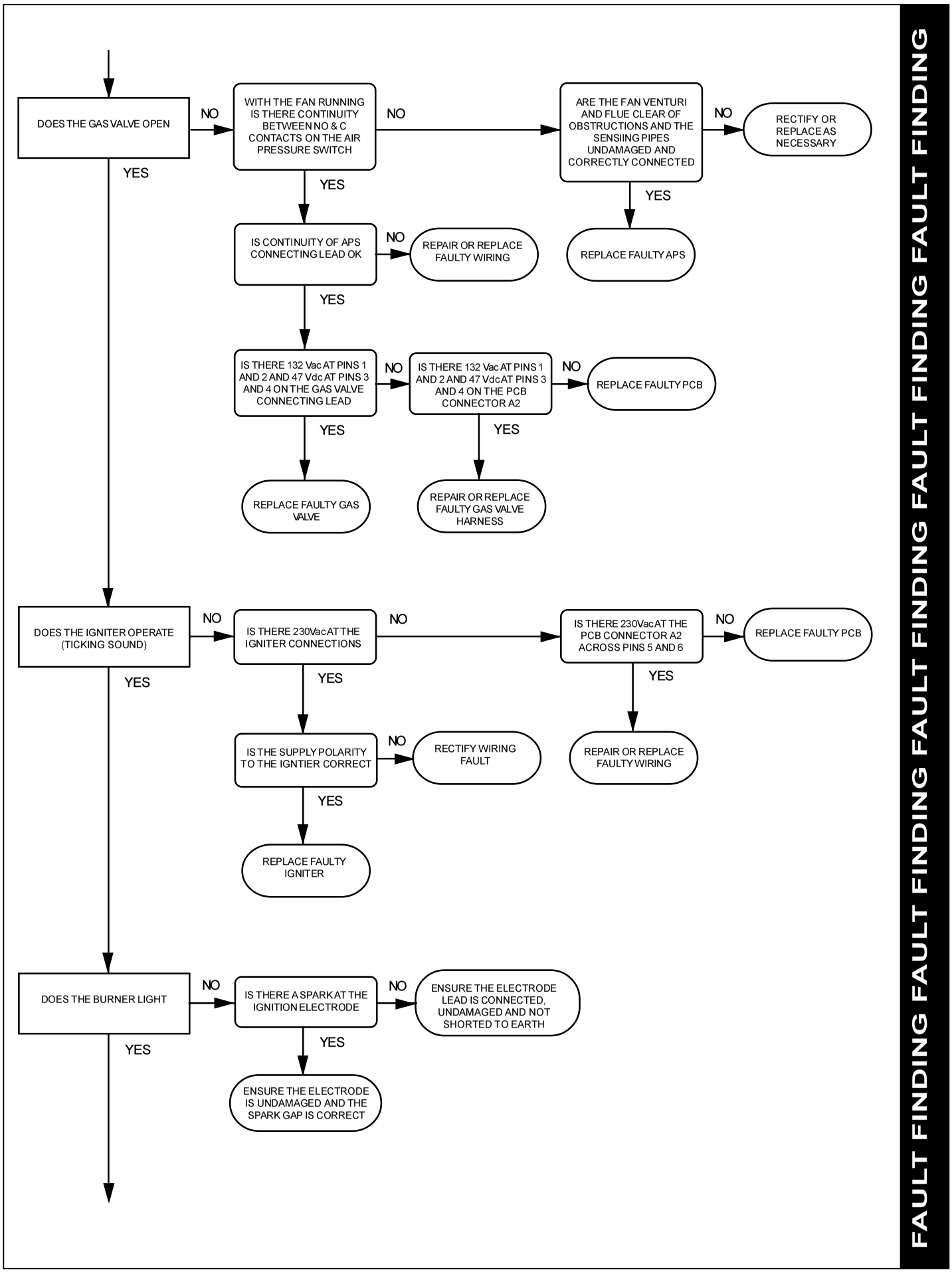

FAULT FINDING

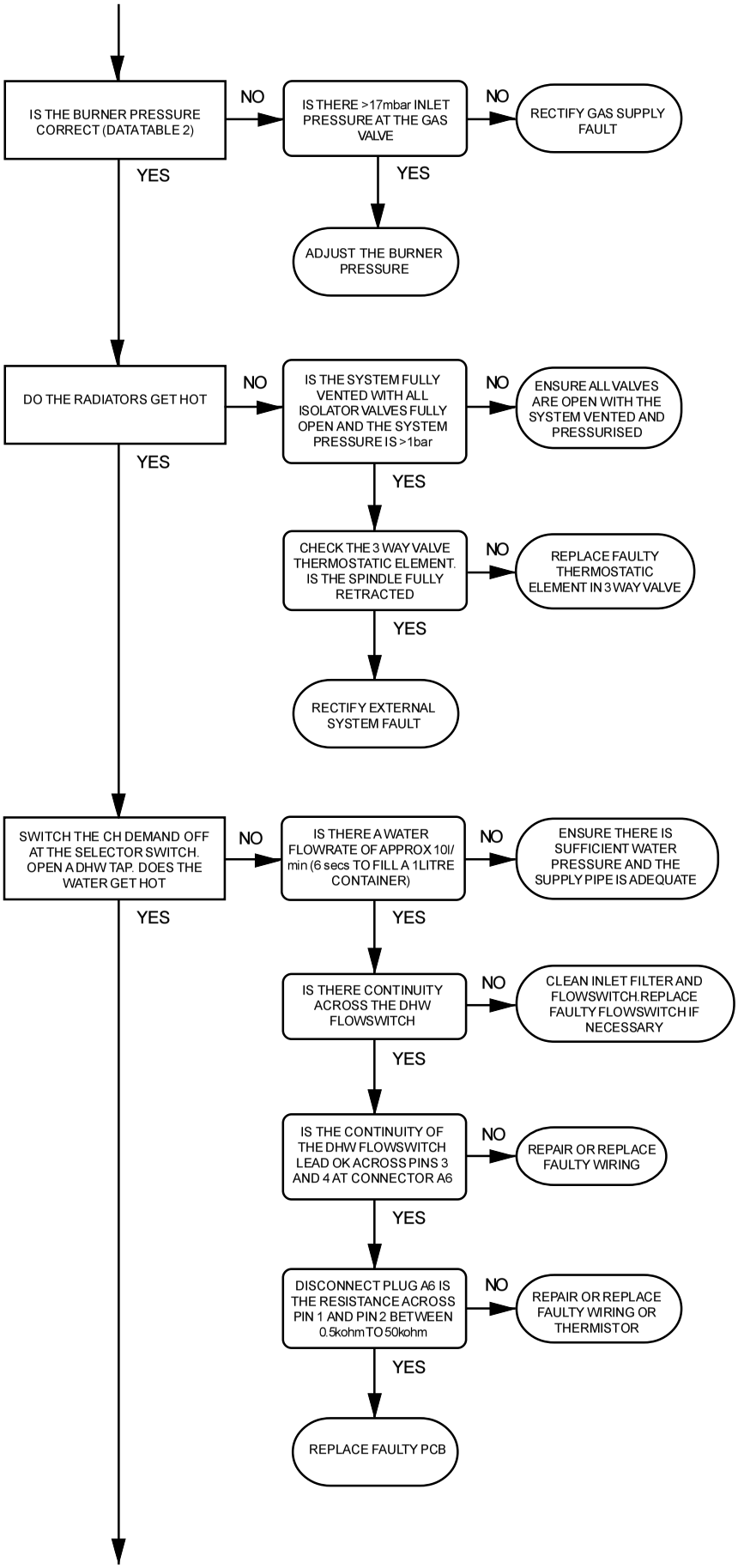

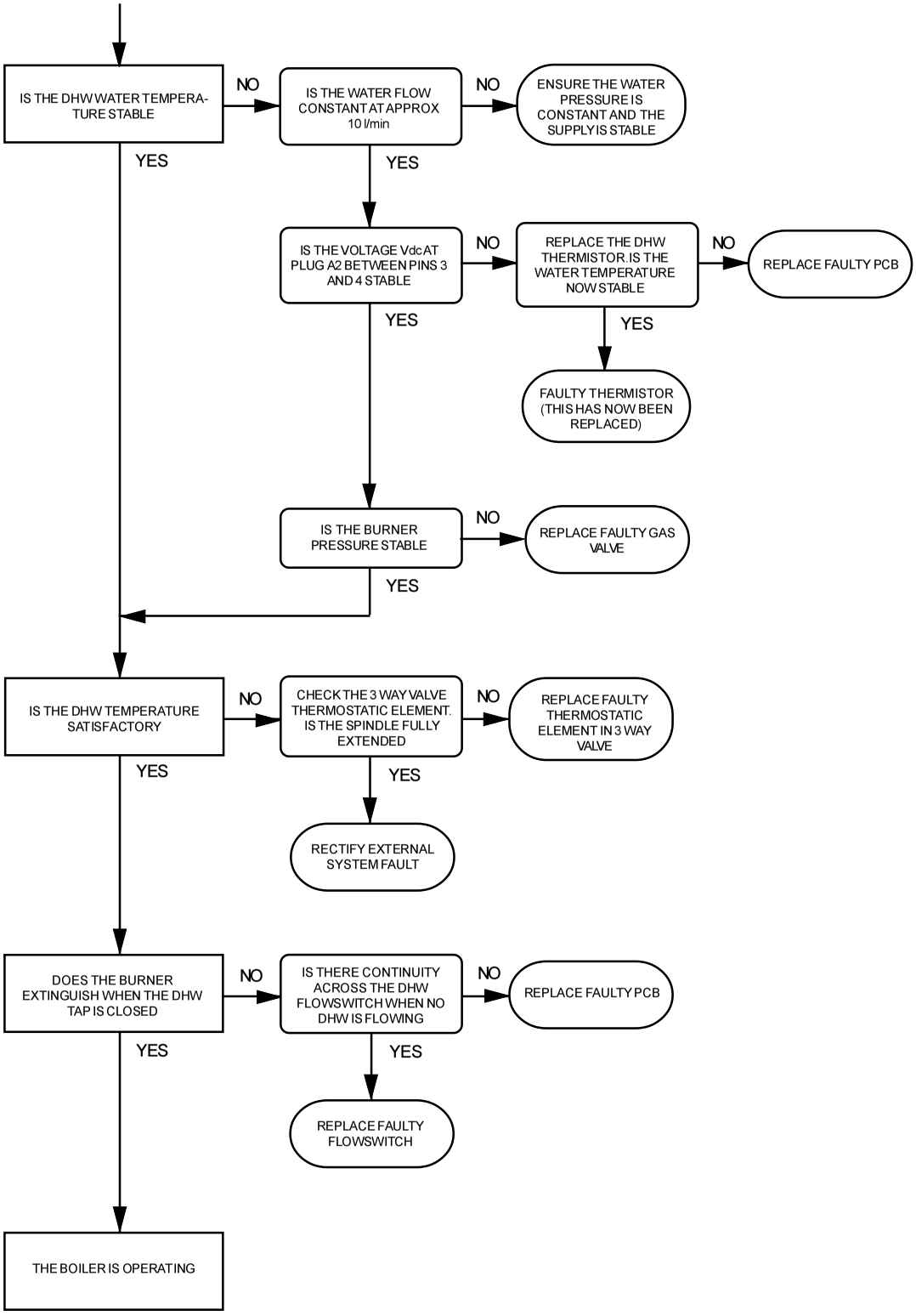
IS THE DHW WATER TEMPERA-TURE STABLE
NO
IS THE WATER FLOW CONSTANT AT APPROX 10 l/min
NO
ENSURE THE WATER PRESSURE IS CONSTANT AND THE SUPPLY IS STABLE
YES
YES
IS THE VOLTAGE VdcAT PLUG A2 BETWEEN PINS 3 AND 4 STABLE
NO
REPLACE THE DHW THERMISTOR. IS THE WATER TEMPERATURE NOW STABLE
NO
REPLACE FAULTY PCB
YES
YES
FAULTY THERMISTOR (THIS HAS NOW BEEN REPLACED)
IS THE BURNER PRESSURE STABLE
NO
REPLACE FAULTY GAS VALVE
YES
IS THE DHW TEMPERATURE SATISFACTORY
NO
CHECK THE 3 WAY VALVE THERMOSTATIC ELEMENT. IS THE SPINDLE FULLY EXTENDED
NO
REPLACE FAULTY THERMOSTATIC ELEMENT IN 3 WAY VALVE
YES
YES
RECTIFY EXTERNAL SYSTEM FAULT
DOES THE BURNER EXTINGUISH WHEN THE DHW TAP IS CLOSED
NO
IS THERE CONTINUITY ACROSS THE DHW FLOWSWITCH WHEN NO DHW IS FLOWING
NO
REPLACE FAULTY PCB
YES
YES
REPLACE FAULTY FLOWSWITCH
THE BOILER IS OPERATING

SHORT LIST OF PARTS

The following are parts commonly required due to damage or expendability. Their failure or absence is likely to affect safety or performance of this appliance.

The list is extracted from the British Gas List of Parts, which contains all available spare parts.

The full lists is held by British Gas Services, **Caradon Ideal Limited** distributors and merchants.

When ordering spares please quote:

1. Boiler model - **europa 24** or **europa 28**
2. Appliance G.C. No. - 47-348-20 (**europa 24**).
   47-348-21 (**europa 28**).
3. Description.
4. Quantity.
5. Product number.

When replacing any part on this appliance, use only spare parts that you can be assured conform to the safety and performance specification that we require. Do not use reconditioned or copy parts that have not been clearly authorised by Ideal Boilers.

Key No.	G.C. Part No.	Description	Qty.	Product Number
1		Front sealing casing 24 kW	1	172404
		Front sealing casing 28 kW	1	172405
3		Gas valve	1	172406
5		Ignition/flame detection electrode	3	172407
6		Burner 24 kW	1	172408
		Burner 28 kW	1	172409
7		Ignition transformer	1	172410
8		Pump Head 24 kW	1	172411
		Pump Head 28 kW	1	172412
9		Pressure gauge	1	172413
10		Control panel	1	172416
11		Fascia	1	172414
12		Automatic air vent 24 kW	1	172417
		Automatic air vent 28 kW	1	172418
16		Pressure relief valve	1	172419
17		DHW flow switch	1	172420
20		CH sensor	1	172421
21		Diverter valve	1	172422
26		Overheat thermostat	1	172423
27		Low water switch	1	172424
28		DHW sensor	1	172425
29		Heat exchanger 24 kW	1	172426
29a		Heat exchanger 28 kW	1	172427
30		Air pressure switch	1	172428
31		Venturi	1	172605
33		Fan 24 kW	1	172429
		Fan 28 kW	1	172430
39		Expansion vessel 24 kW	1	172432
		Expansion vessel 28 kW	1	173433
40		Combustion chamber insulation 24 kW	1	172434
		Combustion chamber insulation 28 kW	1	172435
43		Flow restrictor 24 kW	1	172438
		Flow restrictor 28 kW	1	172439
48		PCB	1	172436

87 SHORT PARTS LIST

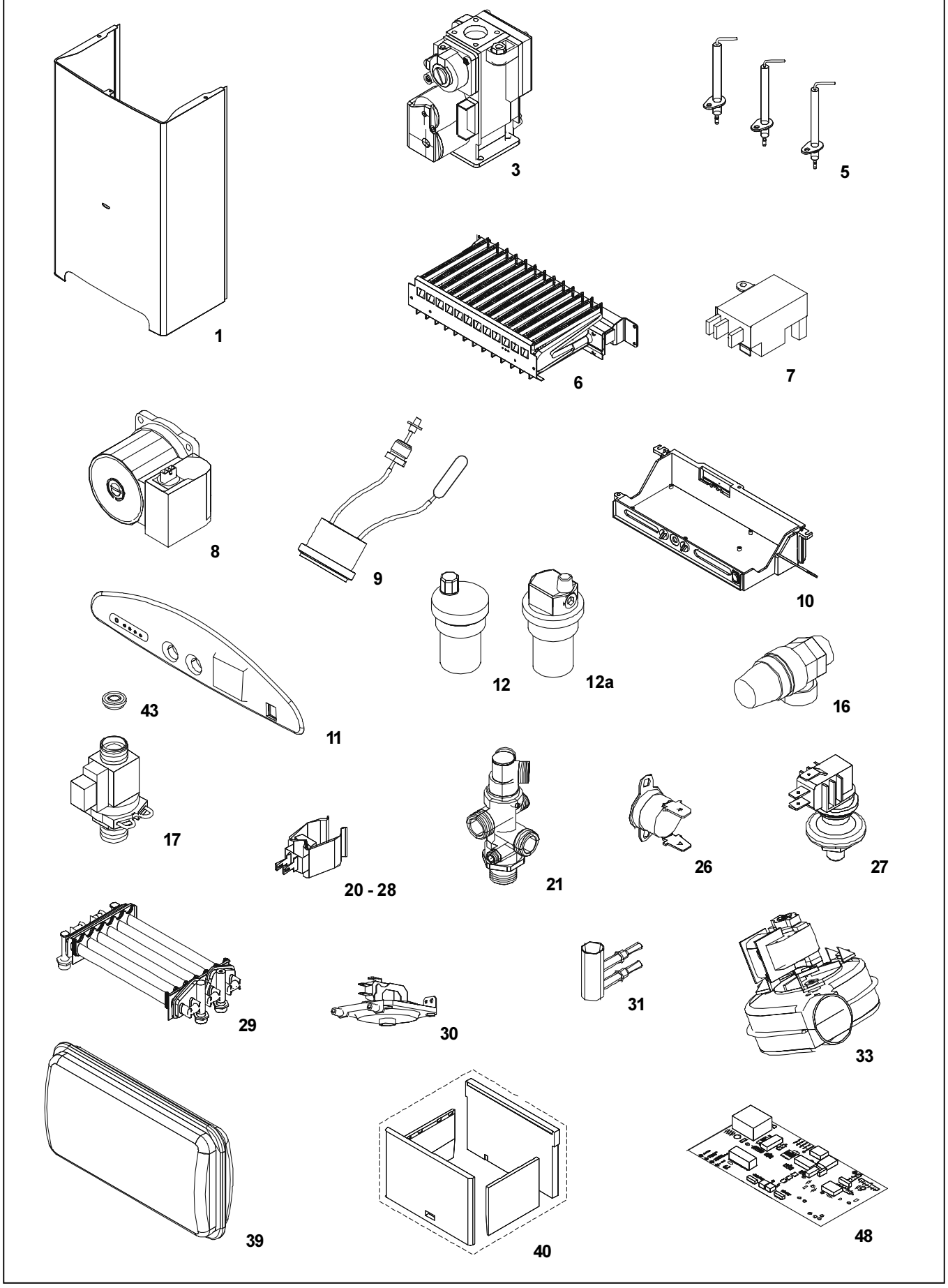

Technical Training

The Ideal Boilers Technical Training Centre offers a series of first class training courses for domestic, commercial and industrial heating installers, engineers and system specifiers.
For details of courses please ring: 01482 498 432

benchmark™

The code of practice for the installation, commissioning & servicing of central heating systems

Ideal Boilers, P.O. Box 103, National Ave, Kingston upon Hull, HU5 4JN. Telephone: 01482 492 251 Fax: 01482 448 858. Registration No. London 322 137.

Caradon Ideal Limited pursues a policy of continuing improvement in the design and performance of its products. The right is therefore reserved to vary specification without notice.

CE

September 2002