installation and servicing

excel

Your Ideal installation and servicing guide

See reverse for **excel** users guide

For details of document amendments, refer to page 3

HE C24, C28, C32

When replacing any part on this appliance use only spare parts that you can be assured conform to the safety and performance specification that we require. Do not use reconditioned or copy parts that have not been clearly authorised by Ideal Boilers.

May 2005 UIN 201 279 A03

For the very latest copy of literature for specification purposes please visit our website www.idealboilers.com where you will be able to download the relevant information in pdf format.

Ideal BOILERS

ENGINEERED FOR PEACE OF MIND

DOCUMENT AMENDMENTS

Relevant Installation changes implemented in this book from Mod Level .....A02 (Feb 05) **to A03** (May 05)

- **Page 11, Frame 4 System Requirements CH and Hot water**
  Water Flow Rate and Pressure Loss Table, now reads 36°F Temp. Differential.

- **Page 14, Frame 9 Unpacking**
  Removal of Benchmark Log Book.

- **Page 15, Frame 11 Determining the Flue Length and Flue Packs Required**
  Additional text added to note.

- **Page 20, Frame 22**
  Aluminium shield note removed.

- **Page 57, Installation Notification Guidelines**
  Guidelines for recording this gas appliance.

- **Page 58, Gas Boiler Commissioning Checklist**
  New Benchmark Checklist inserted (replacing Benchmark leaflet).

- **Page 59, Service Interval Record**
  New Service Interval Record inserted (replacing Benchmark leaflet).

Caradon Ideal Limited reserve the right to vary specification without notice

GENERAL

Table 1 - General Data

			excel HE C24	excel HE C28	excel HE C32
Gas supply			I_{2H} - G20 - 20mbar		
Gas Supply Connection			Rp 1/2"		
Injector Size			1.1	1.25	1.25
Inlet Connection	Domestic Hot Water		15mm copper compression		
Outlet Connection	Domestic Hot Water		15mm copper compression		
Flow Connection	Central Heating		22mm copper compression		
Return Connection	Central Heating		22mm copper compression		
Flue Terminal Diameter		mm (in)	100 (4)		
Average Flue Temp-Mass Flow Rate			75°C - 14g/s	80°C - 16g/s	80°C - 18g/s
Maximum Working Pressure (Sealed Systems)		bar (lb/in²)	2.65 (38.5)		
Maximum Domestic Hot Water Inlet Pressure		bar (lb/in²)	10.0 (145)		
Minimum Domestic Hot Water Inlet Pressure		bar (lb/in²)	0.5 (7)		
Electrical Supply			230 V ~ 50 Hz.		
Power Consumption		W	168	180	184
Fuse Rating			External : 3A Internal :		
Water content	Central Heating	litre (gal)	1.9 (0.42)	2.0 (0.44)	
	Domestic Hot Water		0.2 (0.044)		
Packaged Weight		kg (lb)	47 (103)	53 (117)	53 (117)
Maximum Installation Weight		kg (lb)	43 (95)	49 (108)	49 (108)
Boiler Casing Size	Height	mm (in)	800 (31 1/2")		
	Width	mm (in)	450 (17 1/2")		
	Depth	mm (in)	320 (12 5/8")		
NOX Classification			Class 2		
IP Rating			IP20		

Table 2 - Performance Data - Central Heating

			excel HE C24		excel HE C28		excel HE C32	
			Max	Min	Max	Min	Max	Min
Burner pressure (hot)	G20	mbar	13.4	5.0	10.5	3.9	12.9	3.8
		(in.w.g.)	(5.3)	(2.0)	(4.2)	(1.6)	(5.2)	(1.5)
Input based on nett CV		kW	24.4	15.2	29.0	18.4	33.4	19.0
		(btu/h)	(83,300)	(51,900)	(98,900)	(62,800)	(114,000)	(64,800)
Input based on gross CV		kW	27.1	16.9	32.2	20.4	37.1	21.1
		(btu/h)	(92,400)	(57,600)	(109,900)	(69,600)	(126,600)	(72,000)
Output: Non condensing		kW	23.4	14.2	28.0	17.6	32.0	17.9
70°C Mean Water temp.		(btu/h)	(80,000)	(48,500)	(95,500)	(60,000)	(109,000)	(61,000)
Condensing		kW	25.1	15.3	29.8	18.3	34.3	18.9
40°C Mean Water temp.		(btu/h)	(85,600)	(52,200)	(101,700)	(62,400)	(117,000)	(65,000)
Gas consumption (Hot)	G20	l/s	0.700	0.40	0.83	0.53	0.96	0.54
		(ft³/h)	89.0	50.4	105.9	67	122	69.4
Seasonal efficiency *		(SEDBUK)	Band B [86.8]%		Band B [86.5]%		Band B [86]%	

*The value is used in the UK Government's Standard Assessment Procedure (SAP) for energy rating of dwellings.
The test data from which it has been calculated have been certified by a notified body.

Table 3 - Performance Data - Domestic Hot Water

			HE C24 Max	HE C24 Min	HE C28 Max	HE C28 Min	HE C32 Max	HE C32 Min
Max. Burner pressure (hot)	G20	mbar (in.w.g.)	13.4 (5.3)	2.2 (0.9)	10.5 (4.2)	1.5 (0.6)	12.9 (5.2)	1.6 (0.6)
Input based on nett CV		kW (btu/h)	24.4 (83,300)		29.0 (98,900)		33.4 (114,000)	
Input based on gross CV		kW (btu/h)	27.1 (92,400)		32.2 (109,900)		37.1 (126,600)	
Output		kW (btu/h)	23.4 (80,000)		28.0 (95,500)		32.0 (109,000)	
Gas consumption (Hot)	G20	l/s (ft³/h)	0.7 (89)		0.83 (105.9)		0.96 (122)	
Flow 35°C temp. rise		l/m (gpm)	9.6 (2.1)		11.5 (2.6)		13.1 (2.9)	
Flow 40°C temp. rise		l/m (gpm)	8.4 (1.8)		10 (2.2)		11.5 (2.6)	
Domestic hot water specific rate		l/m (gpm)	11.2 (2.5)		13.4 (3.0)		15.3 (3.4)	

Note. *Quoted flow rates and temperature rises are those theoretically achievable. Flow rates measured during commissioning may differ (due, for example, to resistance of domestic hot water pipe lengths and fittings or available dynamic gas pressures).*

Note. *Gas consumption is calculated using a calorific value of 38.7 MJ/m³ (1038 Btu/ft³) gross or 34.9 MJ/m³ (935 Btu/ft³) nett*

To obtain the gas consumption at a different calorific value:

a. ***For l/s** - divide the gross heat input (kW) by the gross C.V. of the gas (MJ/m³)*

b. ***For ft³/h** - divide the gross heat input (Btu/h) by the gross C.V. of the gas (Btu/ft³)*

Key to symbols

GB = United Kingdom

IE = Ireland (Countries of destination)

PMS = Maximum operating pressure of water

C_{12} C_{32} C_{52} = A room sealed appliance designed for connection via ducts to a horizontal or vertical terminal, which admits fresh air to the burner and discharges the products of combustion to the outside through orifices which, in this case, are concentric. The fan is up stream of the combustion chamber.

I_{2H} = An appliance designed for use on 2nd Family gas, Group H only.

CAUTION. To avoid the possibility of injury during the installation, servicing or cleaning of this appliance care should be taken when handling edges of sheet steel components

excel HE

Natural Gas only **Destination Country:** GB, IE

Boiler size	G.C. Appliance No. (Benchmark No.)	PI No.
C24	47 348 35	87 BP 46
C28	47 348 36	87 BP 46
C32	47 348 37	87 BP 46

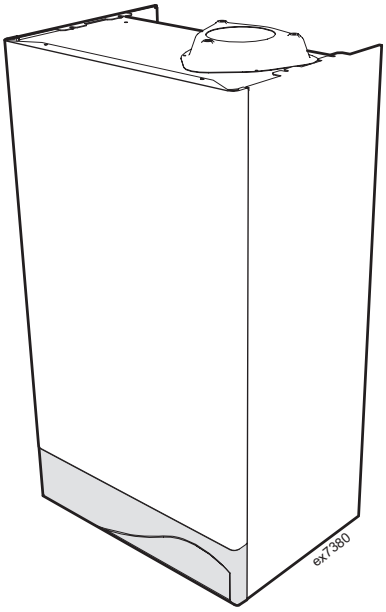

CONTENTS

Air Supply 10
Benchmark Commissioning Checklist 58
Boiler Clearances 9
Boiler Exploded Diagram 12,13
Condensate Drain 23
Electrical Connections 26
Electrical Supply 10
Extension Ducts - Fitting 18
Fault Finding 49-53
Flow Wiring Diagram 29
Flue Fitting 15-18
Horizontal Flue Installation 8
Roof Flue Kit Installation 19-21
Gas Safety Regulations 7
Gas Supply 8
Installation 14-31
Mandatory Requirements 7-11
Pump 46
Safe Handling 6
Servicing 32-48
Short List of Parts 54
Thermostatic Radiator valves 10
Water and Systems 10-12
Water Connections 24
Water Treatment 12
Wiring Diagrams 26-29

For GB, to comply with Building Regulations Part L1 (Part J in Scotland) the boiler should be fitted in accordance with the manufacturer's instructions. Self-certification that the boiler has been installed to comply with Building Regulations can be demonstrated by completing and signing the Benchmark Commissioning Checklist.

BENCHMARK COMMISSIONING CHECKLIST

Boiler **Page**

Make and model 5
Appliance serial no. on data badge 13
SEDBUK No. % 4

Controls

Time and temperature control to heating 27
Time and temperature control to hot water 27
Heating zone valves ..... n/a
TRV's 10
Auto bypass 11
Boiler interlock 10

For all boilers

Flushing to BS.7593 12
Inhibitor 12

Central heating mode

Heat input ..... to be calculated

Page

Burner operating pressure ..... measure and record
Central heating flow temp. ..... measure and record
Central heating return temp. ... measure and record

For combination boilers only

Scale reducer 11

Hot water mode

Heat input ..... n/a
Max. operating burner pressure ..... n/a
Max. operating water pressure ..... n/a
Cold water inlet temp ..... n/a
Hot water outlet temp. ..... n/a
Water flow rate at max. setting ..... n/a

For condensing boilers only

Condensate drain 23

For all boilers: *complete, sign & hand over to customer*

For assistance see Technical Helpline on the back page

NOTE TO THE INSTALLER: COMPLETE THE BENCHMARK COMMISSIONING CHECKLIST AND LEAVE THESE INSTRUCTIONS WITH APPLIANCE

benchmark™

INTRODUCTION

The **excel HE** range of boilers are wall mounted, full sequence, automatic spark ignition, low water content, fanned flue, high efficiency, condensing, combination gas boilers.

Note. *Due to the high efficiency of the boiler a plume of water vapour will form at the terminal during operation.*

Central heating (CH) and instantaneous domestic hot water (DHW) outputs are fully modulating with a maximum of :

C24 23.4kW (80,000 Btu/h)

C28 28.0kW (95,500 Btu/h)

C32 32.0kW (109,000 Btu/h)

The boilers are supplied fully assembled with DHW plate heat exchanger, diverter valve, circulating pump, pressure gauge, safety valve and CH expansion vessel.

Variable CH and DHW temperature controls are fitted on the user control.

The boiler casing is of white painted mild steel with a plastic drop down controls access door.

The boiler temperature controls are located behind the controls access door.

The main heat exchanger is made of copper, the high efficiency recuperator is made of stainless steel and the DHW plate heat exchanger is made of stainless steel.

The boiler is suitable for connection to fully pumped, sealed water systems ONLY. Adequate arrangements for completely draining the system by provision of drain cocks MUST be provided in the installation pipework.

A system bypass is not required when TRV's are fitted to **ALL** radiators (see Frame 5). The boiler incorporates an automatic bypass.

Pipework from the boiler is routed downwards as standard, but may be routed upwards behind the boiler using the stand-off frame (supplied in a separate kit).

SAFE HANDLING

This boiler may require 2 operatives to move it to its installation site, remove it from its packaging and during movement into its installation location. Manoeuvring the boiler may include the use of a sack truck and involve lifting, pushing and pulling.

Caution should be exercised during these operations.

Operatives should be knowledgeable in handling techniques when performing these tasks and the following precautions should be considered:

- Grip the boiler as described in Frame 28.
- Be physically capable.
- Use PPE as appropriate, e.g. gloves, safety footwear.

During all manoeuvres and handling actions, every attempt should be made to ensure the following unless unavoidable and/or the weight is light.

- Keep back straight.
- Avoid twisting at the waist.
- Avoid upper body/top heavy bending.
- Always grip with the palm of the hand.
- Use designated hand holds.
- Keep load as close to the body as possible.
- Always use assistance if required.

OPERATION

With no demand for CH, the boiler fires only when DHW is drawn off.

When there is a demand for CH, the heating system is supplied at the selected temperature of between 38°C and 82°C, until DHW is drawn off. The full output from the boiler is then directed via the diverter valve to the plate heat exchanger to supply a nominal DHW draw-off of :

C24 9.6 l/min (2.1 GPM) at 35°C rise.
C28 11.5 l/min (2.6 GPM) at 35°C rise.
C32 13.1 l/min (2.9 GPM) at 35°C rise.

Note. *Quoted flow rates and temperature rises are those theoretically achievable. Flow rates measured during commissioning may differ (due, for example, to resistance of domestic hot water pipe lengths and fittings or available dynamic gas pressures).*

Due to system variations and seasonal temperature fluctuations DHW flow rates/temperature rise will vary, requiring adjustment at the draw off tap.

At low DHW draw-off rate the maximum temperature is limited to 65° C by the modulating gas control.

Refer also to Frame 1 - 'Boiler Water Circuit Diagram'.

1 BOILER WATER CIRCUIT DIAGRAM

LEGEND

1. DHW plate heat exchanger
2. DHW flow switch
3. DHW outlet pipe
4. Domestic cold water inlet cock
5. 3 - way diverter valve
6. Main circuit drainage cock
7. CH flow cock
8. By-pass valve
9. CH return cock
10. 3 Bar pressure relief valve
11. Gas cock
12. Expansion vessel
13. Gas valve inlet pressure tap
14. Modulating gas valve
15. Burner pressure tap
16. Flame detection electrode
17. Ignition electrodes
18. Burner
19. Combustion chamber
20. Primary heat exchanger
21. Fan
22. Air pressure switch
23. Venturi device
24. Flue outlet pipe
25. Air intake pipe
26. Automatic air vent
27. Overheat thermostat
28. Pump
29. Pump vent plug
30. CH thermistor
31. CH flow switch
32. DHW thermistor
33. CH temperature pressure gauge
34. Recuperator
35. Sensor dry fire/condensate blockage thermistor
36. Condensate pipe
37. Collector flue condensate

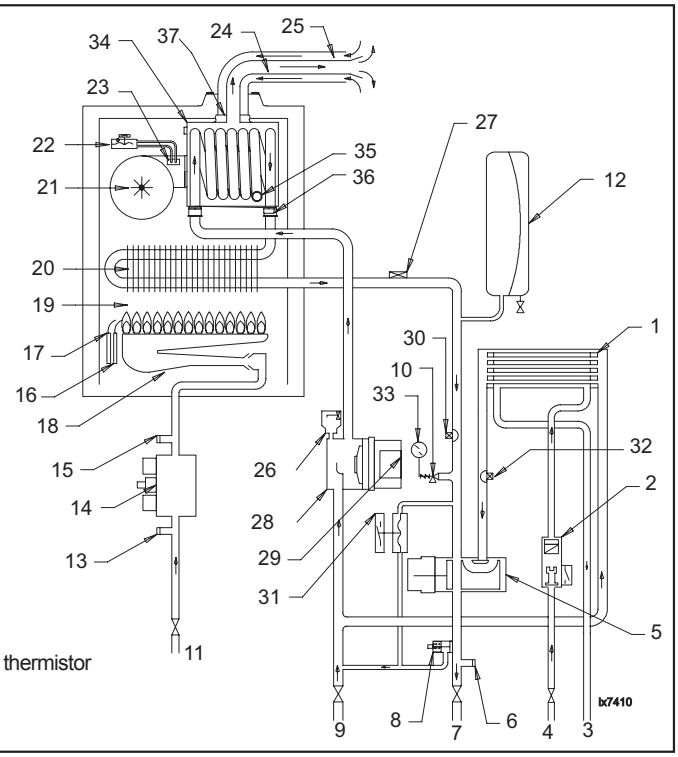

OPTIONAL EXTRA KITS

FLUING:

- **Flue Extension Ducts.** ('D' Pack - 1000mm long).
  C24-up to 3m
  C28-up to 2.675m
  C32-up to 1.725m
- **90° Elbow Kit** (60/100 dia maximum no. per installation).
  C24-up to 2 elbows
  C28-up to 2 elbows
  C32-up to 1 elbow
- **45° Elbow Kit** (60/100 dia maximum no. per installation).
  C24-up to 2 elbows
  C28-up to 2 elbows
  C32-up to 1 elbow
- **Roof Flue Kit** (80/125)
  C24-up to a maximum length of 16 m
  C28-up to a maximum length of 12 m
  C32- up to a maximum length of 8 m
- **Roof Flue Extension Duct Kit** (80/125)
- **Pitched Roof Tile** (for roof flue kit)
- **Flat Roof Tile** (For roof flue kit)
- **Ridge Tile Flue Terminal** (For twin flue kit)
- **Adaptor** (60/100 to 80/125)
- **Twin Flue Kit** (80/80)
- **Twin Flue Kit** (60/60)
- **Vertical Connector** (60/100)
- **Vertical Outlet Flue Kit with Elbow** (60/100)
  C24-up to a maximum length of 5.5 m
  C28-up to a maximum length of 4 m
  C32- up to a maximum length of 2.5 m
- **80mm Extension Duct**
- **60mm Extension Duct**
- **90° Elbow** (80mm male/female)
- **90° Elbow** (60mm male/female)
- **45° Elbow** (80mm male/female)
- **45° Elbow** (60mm male/female)
- **Flue Finishing Kit**
- **90° Elbow** (80/125)
- **45° Elbow** (80/125)
- **Slip Coupling** (80mm)
- **Slip Coupling** (60mm)

OTHER OPTION KITS:

- **Mechanical Programmer (24 hour)**
- **Electronic Programmer (7 day)**
- **Condensate Pump Kit**
- **Siphon Kit**
- **Stand Off Kit**
- **Pre-Piping Frame Kit**

SAFETY

Current Gas Safety (installation and use) regulations or rules in force:

The appliance is suitable only for installation in GB and IE and should be installed in accordance with the rules in force.

In GB, the installation must be carried out by a CORGI Registered Installer, or in IE a competent person. It must be carried out in accordance with the relevant requirements of the:

- Gas Safety (Installation and Use) Regulations.
- The appropriate Building Regulations either The Building Regulations, The Building Regulations (Scotland), Building Regulations (northern Ireland).
- The Water Fittings Regulations or Water bye-laws in Scotland.
- The Current I.E.E. Wiring Regulations.

Where no specific instructions are given, reference should be made to the relevant British Standard Code of Practice.

In IE, the installation must be carried out by a Competent Person and installed in accordance with the current edition of I.S.813 "Domestic Gas Installations", the current Building Regulations and reference should be made to the current ETCI rules for electrical installation.

Detailed recommendations are contained in the following British Standard Codes of Practice:

BS. 5440:1	Flues (for gas appliances of rated input not exceeding 70 kW).
BS. 5440:2	Ventilation (for gas appliances of rated input not exceeding 70 kW).
BS. 5449	Forced circulation hot water systems.
BS. 5546	Installation of gas hot water supplies for domestic purposes (2nd Family Gases)
BS. 6798	Installation of gas fired hot water boilers of rated input not exceeding 70 kW.
BS. 6891	Low pressure installation pipes.

Health & Safety Document No. 635.

The Electricity at Work Regulations, 1989.

The manufacturer's notes must NOT be taken, in any way, as overriding statutory obligations.

IMPORTANT. These appliances are CE certificated for safety and performance. It is, therefore, important that no external control devices, e.g. flue dampers, economisers etc., are directly connected to these appliances unless covered by these Installation and Servicing Instructions or as otherwise recommended by **Caradon Ideal Limited** in writing. If in doubt please enquire.

Any direct connection of a control device not approved by **Caradon Ideal Limited** could invalidate the certification and the normal appliance warranty. It could also infringe the Gas Safety Regulations and the above regulations.

SAFE HANDLING OF SUBSTANCES

Care should be taken when handling the boiler insulation panels, which can cause irritation to the skin. No asbestos, mercury or CFCs are included in any part of the boiler or its manufacture.

LOCATION OF BOILER

The boiler must be installed on a flat and vertical wall, capable of adequately supporting the weight of the boiler and any ancillary equipment.

The boiler may be fitted on a combustible wall and insulation between the wall and the boiler is not necessary, unless required by the local authority.

For electrical safety reasons there must be no access available from the back of the boiler.

The boiler must not be fitted outside.

Timber Framed Buildings

If the boiler is to be fitted in a timber framed building it should be fitted in accordance with the Institute of Gas Engineering document IGE/UP/7:1998.

Bathroom Installations

This appliance is rated **IP20.**

The boiler may be installed in any room or internal space, although particular attention is drawn to the requirements of the current IEE (BS.7671) Wiring Regulations and, in Scotland, the electrical provisions of the building regulations applicable in Scotland, with respect to the installation of the boiler in a room or internal space containing a bath or shower. For IE reference should be made to the current ETCI rules for electrical installations and I.S. 813:2002.

If the appliance is to be installed in a room containing a bath or shower then, providing water jets are not going to be used for cleaning purposes (as in communal baths/showers), the appliance can be installed in Zone 3, as detailed in BS.7671.

Compartment Installations

A compartment used to enclose the boiler should be designed and constructed specially for this purpose.

An existing cupboard or compartment may be used, provided that it is modified for the purpose.

In both cases, details of essential features of cupboard / compartment design, including airing cupboard installation, are to conform to the following:

- BS 6798 (No cupboard ventilation is required - see 'Air Supply' for details).
- The position selected for installation MUST allow adequate space for servicing in front of the boiler.
- For the minimum clearances required for safety and subsequent service, see the wall mounting template and Frame 2. In addition, sufficient space may be required to allow lifting access to the wall mounting plate.

GAS SUPPLY

The local gas supplier should be consulted, at the installation planning stage, in order to establish the availability of an adequate supply of gas. An existing service pipe must NOT be used without prior consultation with the local gas supplier.

The boiler MUST be installed on a gas supply with a governed meter only.

A gas meter can only be connected by the local gas supplier or by a CORGI registered engineer. In IE by a competent person.

An existing meter should be checked, preferably by the gas supplier, to ensure that the meter is adequate to deal with the rate of gas supply required.

IMPORTANT.

Installation pipes must be fitted in accordance with BS.6891. In IE refer to IS.813:2002. Pipework from the meter to the boiler MUST be of an adequate size, i.e. not less than 22mm O.D. copper or 3/4" B.S.P. iron.

The complete installation MUST be tested for gas soundness and purged as described in the above code.

FLUE INSTALLATION

Pluming will occur at the terminal so terminal positions where this could cause a nuisance should be avoided.

The flue must be installed in accordance with the recommendations of BS. 5440-1: 2000.
In IE refer to I.S. 813:2002.

The following notes are intended for general guidance:

1. The boiler MUST be installed so that the terminal is exposed to external air.
2. It is important that the position of the terminal allows the free passage of air across it at all times.
3. Minimum acceptable spacing from the terminal to obstructions and ventilation openings are specified in Table 4.
4. Where the lowest part of the terminal is fitted less than 2m (6'6") above a balcony, above ground or above a flat roof to which people have access then the terminal MUST be protected by a purpose designed guard.

   Terminal guards are available from boiler suppliers. (Ask for TFC flue guard model no. K6 - round, plastic coated). In case of difficulty contact:

   Grasslin (UK) Ltd. Tel. + 44 (0) 01732 359 888
   Tower House, Vale Rise Fax. + 44 (0) 01732 354 445
   Tonbridge. Kent TN9 1TB www.tfc-group.co.uk

   Ensure that the guard is fitted centrally.
5. The flue assembly shall be so placed or shielded as to prevent ignition or damage to any part of any building.
6. The air inlet/products outlet duct and the terminal of the boiler MUST NOT be closer than 25mm (1") to combustible material. Detailed recommendations on the protection of combustible material are given in BS. 5440-1:2000.

IMPORTANT. It is absolutely essential to ensure, in practice, that products of combustion discharging from the terminal cannot re-enter the building or any other adjacent building through ventilators, windows, doors, other sources of natural air infiltration, or forced ventilation / air conditioning.

If this should occur the appliance MUST be turned OFF, labelled as 'unsafe' until corrective action can be taken.

TERMINAL

The terminal assembly can be adapted to accommodate various wall thicknesses. Refer to Frame 11.

Table 4

Terminal Position	Minimum Spacing
1. Directly below, above or alongside of another openable window, air vent, or other ventilation opening.	300 mm (12")
2. Below guttering, drain pipes or soil pipes	25 mm (1")
3. Below eaves	25 mm (1")
4. Below balconies or a car port roof	25 mm (1")
5. From vertical drain pipes or soil pipes	150 mm (6")
6. From an internal or external corner or to a boundary along side the terminal.	100 mm (4")
7. Above adjacent ground, roof or balcony level	300 mm (12")
8. From a surface or a boundary facing the terminal	600 mm (24")
9. From a terminal facing a terminal	1200 mm (48")
10. From an opening in a car port (e.g. door or window) into dwelling	1200 mm (48")
11. Vertically from a terminal on the same wall	1500 mm (60")
12. Horizontally from a terminal on the wall	300 mm (12")
Vertical Terminals	
13. Above the roof pitch with roof slope of all angles.	300 mm (12")
Above flat roof	300 mm (12")
14. From single wall face	600 mm (24")
From corner walls	1000 mm (40")
Twin Flue Applications	
15. Centre distance between air inlet and flue outlet ducts	120mm (5")

2 BOILER DIMENSIONS, SERVICES & CLEARANCES

all dimensions in mm (in)

The following minimum clearances must be maintained for operation and servicing.

Additional space will be required for installation, depending upon site conditions.

Side and Rear Flue

a. Provided that the flue hole is cut accurately, e.g. with a core drill, the flue can be installed from inside the building where wall thicknesses do not exceed 600mm (24").

Where the space into which the boiler is going to be installed is less than the length of flue required the flue must be fitted from the outside.

Installation from inside ONLY

b. If a core boring tool is to be used inside the building the space in which the boiler is to be installed must be at least wide enough to accommodate the tool.

CLEARANCES

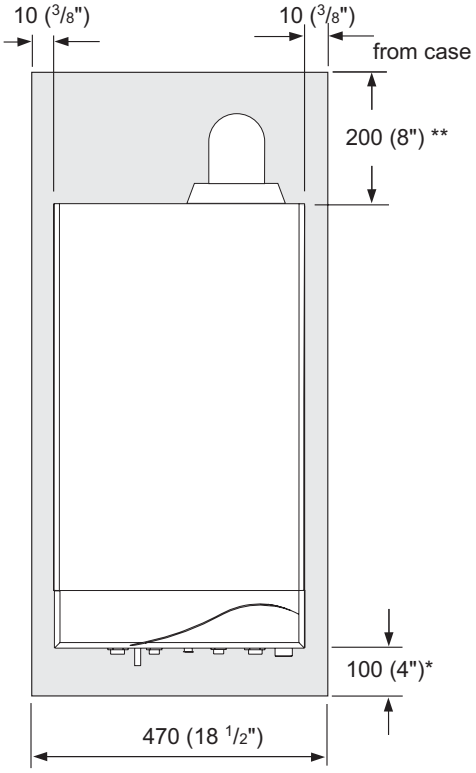

BOILER DIMENSIONS

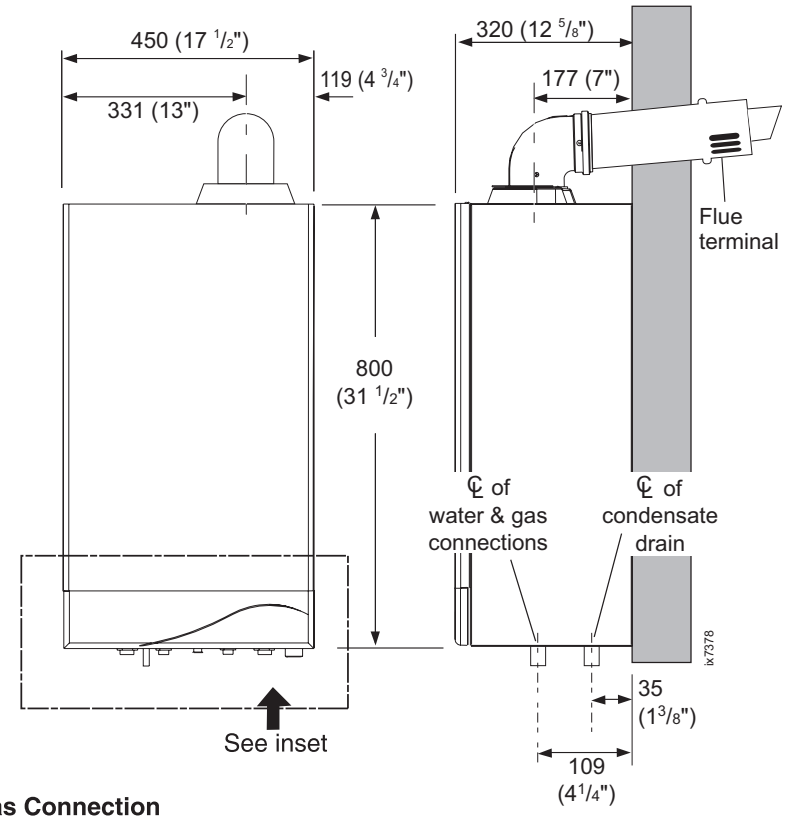

Inset: Water Connections and Gas Connection

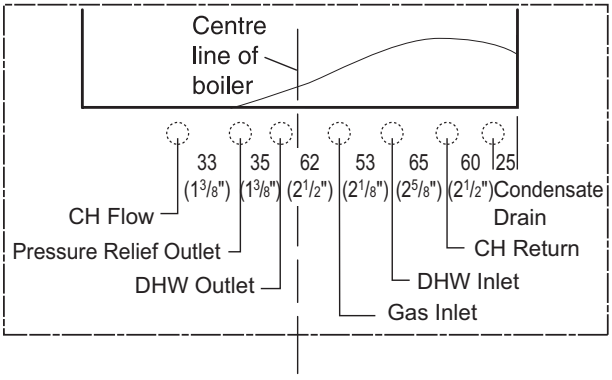

SIDE FLUE ONLY **			
Horizontal length of flue from boiler to outside wall			Top clearance required (MIN.) Dim. A
C24	C28	C32	
0.5 m	0.5 m	0.5 m	200 mm (7 7/8")
1.0 m	1.0 m	1.0 m	200 mm (7 7/8")
1.5 m	1.5 m	1.5 m	230 mm (9")
2.0 m	2.0 m	1.725 m	250 mm (9 13/16")
2.5 m	2.5 m	N/A	260 mm (10 1/4")
3.0 m	2.675 m	N/A	280 mm (11")

Front clearance

The minimum front clearance when built in to a cupboard is 5mm (1/4") from the cupboard door but 450mm (17 3/4") overall clearance is still required, with the cupboard door open, to allow for servicing.

* **Bottom clearance**

Bottom clearance after installation can be reduced to 5mm. However, 100mm must be available for servicing.

REAR FLUE ONLY **

MIN. Top clearance required = 200 mm (8")

AIR SUPPLY

It is NOT necessary to have a purpose-provided air vent in the room or internal space in which the boiler is installed. Neither is it necessary to ventilate a cupboard or compartment in which the boiler is installed, due to the low surface temperatures of the boiler casing during operation; therefore the requirements of BS 6798, Clause 12, and BS 5440:2 may be disregarded.

WATER CIRCULATION SYSTEM

IMPORTANT.
A minimum length of 1 metre of copper pipe MUST be fitted to both flow and return connections from the boiler before connection to any plastic piping.

The central heating system should be in accordance with BS.6798 and, in addition, for smallbore and microbore systems, BS.5449.

WATER TREATMENT - see Frame 6

BOILER CONTROL INTERLOCKS

Caradon Ideal Limited recommend that heating systems utilising full thermostatic radiator valve control of temperature in individual rooms should also be fitted with a room thermostat controlling the temperature in a space served by radiators not fitted with such a valve as stated in BS. 5449.

Central heating systems controls should be installed to ensure the boiler is switched off when there is no demand for heating or hot water.

When thermostatic radiator valves are used, the space heating temperature control over a living / dining area or hallway having a heating requirement of at least 10% of the boiler heat output should be achieved using a room thermostat, whilst other rooms are individually controlled by thermostatic radiator valves.

ELECTRICAL SUPPLY

WARNING.
This appliance must be earthed.
Wiring external to the appliance MUST be in accordance with the current I.E.E. (BS.7671) Wiring Regulations and any local regulations which apply. For IE reference should be made to the current ETCI rules for electrical installations.

The point of connection to the mains should be readily accessible and adjacent to the boiler.

CONDENSATE DRAIN Refer to Frame 27

A condensate drain is provided on the boiler. This drain must be connected to a drainage point on site. All pipework and fittings in the condensate drainage system MUST be made of plastic - *no other materials may be used.*

IMPORTANT.

Any external runs must be insulated.

The drain outlet on the boiler is standard 21.5mm (3/4”) overflow pipe.

3 SYSTEM REQUIREMENTS - Central Heating

Notes

a. *The method of filling, refilling, topping up or flushing sealed primary hot water circuits from the mains via a temporary hose connection is only allowed if acceptable to the local water authority.*

b. *Antifreeze fluid, corrosion and scale inhibitor fluids suitable for use with boilers having copper heat exchangers may be used in the central heating system.*

Advice should be sought from a local water treatment company.

General

1. The installation must comply with all relevant national and local regulations.

2. The installation should be designed to work with flow temperatures of up to 82°C.

3. All components of the system must be suitable for a working pressure of 3 bar and temperature of 110°C. Extra care should be taken in making all connections so that the risk of leakage is minimised.

The following components are incorporated within the appliance:

a. Circulating pump.

b. Safety valve, with a non-adjustable preset lift pressure of 3 bar.

c. Pressure gauge, covering a range of 0 to 4 bar.

d. A 7-litre expansion vessel, with an initial charge pressure of 0.75 bar.

Safety valve setting	bar	3.0	
Vessel charge pressure	bar	0.5 to 0.75	
System pre-charge pressure	bar	None	1.0
System volume (litres)		**Expansion vessel volume (litres)**	
25		1.6	1.8
50		3.1	3.7
75		4.7	5.5
100		6.3	7.4
125		7.8	9.2
150		9.4	11.0
175		10.9	12.9
190		11.9	14.0
200		12.5	14.7
250		15.6	18.4
300		18.8	22.1
For other system volumes multiply by the factor across		0.063	0.074

4. 'Make-up' Water. Provision must be made for replacing water loss from the system, either :

a. From a manually filled 'make-up' vessel with a readily visible water level. The vessel should be mounted at least 150mm above the highest point of the system and be connected through a non-return valve to the system, fitted at least 150mm below the 'make-up' vessel on the return side of the radiators.

or

continued . . . . . .

4 SYSTEM REQUIREMENTS - CH (continued) and Hot Water

b. Where access to a 'make-up' vessel would be difficult, by pre-pressurisation of the system.

The maximum cold water capacity of the system should not exceed 143 litres, if not pressurized. However, if the system is to be pressurized, the efficiency of the expansion vessel will be reduced and a larger vessel (or smaller system volume) may be necessary. If the capacity of the vessel is not considered sufficient for this, or for any other reason, an additional vessel MUST be installed on the return to the boiler.

Guidance on vessel sizing is given in Frame 3.

5. Filling. The system may be filled by the following method:

a. Through a temporary hose connection from a 'draw-off' tap, supplied from a service pipe under mains pressure. Where the mains pressure is excessive a pressure reducing valve must be used to facilitate filling.

When installing the filling device it must be connected as shown below, to fully comply with the water regulations. This may involve the fitting of an additional WRAS approved isolator valve to the mains supply.

i. Thoroughly flush out the whole system with cold water.

ii. Fill and vent the system until the pressure gauge registers 1.5 bar and examine for leaks.

iii. Check the operation of the safety valve by raising the water pressure until the valve lifts. This should occur within 0.3 bar of the preset lift pressure.

iv. Release water from the system until the minimum system design pressure is reached: 1.0 bar if the system is to be pre-pressurised.

Water Flow Rate and Pressure Loss

Max CH Output	kW	23.4	28	32
	(Btu/h)	(80,000)	(95,500)	(109,000)
Water flow rate	l/sec	0.28	0.33	0.38
	(gal/min)	(3.7)	(4.4)	(5.0)
Temp. Differential	°C	20	20	20
	(°F)	(36)	(36)	(36)
Head available for	m.w.g.	3.3	1.5	1.1
system pump.	(ft.w.g.)	(10.8)	(4.9)	(3.6)

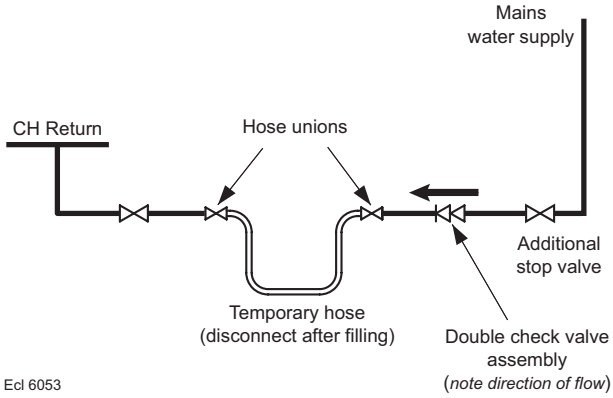

DOMESTIC HOT WATER

1. The domestic hot water service must be in accordance with BS 5546 and BS 6700.
2. Refer to Table 1 for minimum and maximum working pressures.
3. The boilers are suitable for connection to most types of washing machine and dishwasher appliances.
4. When connecting to suitable showers, ensure that:

a. The cold inlet to the boiler is fitted with an approved anti-vacuum or syphon non-return valve.

b. Hot and cold water supplies to the shower are of equal pressure.

5. **Hard Water Areas**
Where the water hardness exceeds 200mg/litre, it is recommended that a proprietary scale reducing device is fitted into the boiler cold supply within the requirements of the local water company.

IMPORTANT

Provision MUST be made to accommodate the expansion of DHW contained within the appliance, if a non-return valve is fitted to the DHW inlet.

5 SYSTEM BALANCING

The boiler does not need a bypass.

BALANCING

1. Set the programmer to ON.

Close the manual or thermostatic valves on all radiators, leaving the twin lockshield valves (on the radiators referred to above) in the OPEN position.

Turn up the room thermostat and adjust these lockshield valves to give boiler flow and return temperatures not more than 20°C apart.

These valves should now be left as set.

2. Open all manual or thermostatic radiator valves and adjust the lockshield valves on the remaining radiators, to give around 20°C temperature drop at each radiator.
3. Adjust the room thermostat and programmer to NORMAL settings.

6 WATER TREATMENT

CENTRAL HEATING

The excel HE range of boilers have a copper main heat exchanger and a stainless steel high efficiency heat exchanger.

IMPORTANT.
The application of any other treatment to this product may render the guarantee of Caradon Ideal Limited invalid.

Caradon Ideal Limited recommend Water Treatment in accordance with the Benchmark Guidance Notes on Water Treatment in Central Heating Systems.

If water treatment is used **Caradon Ideal Limited** recommend only the use of FERNOX-COPAL or MB1, GE BETZ SENTINEL X100 or Salamander Corrosion Guard inhibitors and associated water treatment products, which must be used in accordance with the manufacturers' instructions.

Notes.

1. *It is most important that the correct concentration of the water treatment products is maintained in accordance with the manufacturers' instructions.*
2. *If the boiler is installed in an existing system any unsuitable additives MUST be removed by thorough cleansing. BS 7593:1992 details the steps necessary to clean a domestic heating system.*
3. *In hard water areas, treatment to prevent lime scale may be necessary - however the use of artificially softened water is NOT permitted.*
4. *Under no circumstances should the boiler be fired before the system has been thoroughly flushed.*

DOMESTIC HOT WATER

In hard water areas where main water can exceed 200ppm Total Hardness (as defined by BS 7593:1993 Table 2) a scale reducing device should be fitted into the boiler cold supply within the requirements of the local water company. The use of artificially softened water, however, is not permitted.
Caradon Ideal Limited recommend the use of Fernox Qantomat, GE Betz Sentinel Combiguard and Calmag CalPhos I scale reducing devices, which must be used in accordance with the manufacturers' instructions.

For further information contact:
Fernox Manufacturing Co. Ltd
Cookson Electronics
Forsyth Road
Sheerwater
Woking
Surrey GU21 5RZ
+44 (0) 1799 521133

GE Betz Ltd
Sentinal Division
Foundry Lane
Widnes
Cheshire WA8 8UD
Tel: +44 (0) 151 4245351

Salamander Engineering Ltd
Unit 24 Reddicap Trading Estate
Sutton Coldfield
West Midlands B75 7BU
Tel: +44 (0) 121 3780952

Calmag Ltd.
Unit 4-6, Crown Works
Bradford Road
Sandbeds, Keighley
West Yorkshire BD20 5LN
Tel: +44 (0) 1535 210 320

7 BOILER ASSEMBLY - Exploded View Legend

1. Main heat Exchanger
2. Fan
5. Recuperator
6. Burner
8. Injectors
9. Detection electrode
10. Ignition electrode LH & RH
17. Safety Valve
19. Pump head
20. Divertor valve Actuator
21. Auto air vent valve
25. Casing controls door
26. Controls fascia
27. Knob potentiometer
28. Panel control cover
29. Panel control support
30. Panel user wiring cover
31. Main PCB
33. Pressure gauge
34. Lens clear
35. Expansion PCB
36. Mains switch
40. Ignition unit NAC
41. Air pressure switch
42. Panel front sealing
43. Casing LH side panel
44. Casing RH side panel
45. Casing front panel
46. Casing bottom panel
50. Gas valve
51. Condensate blockage thermistor
52. Overheat thermostat
53. Expansion vessel
56. Combustion chamber insulation
57. Thermistor waterset CH & DHW
58. Plate Heat Exchanger

8 BOILER ASSEMBLY - Exploded View

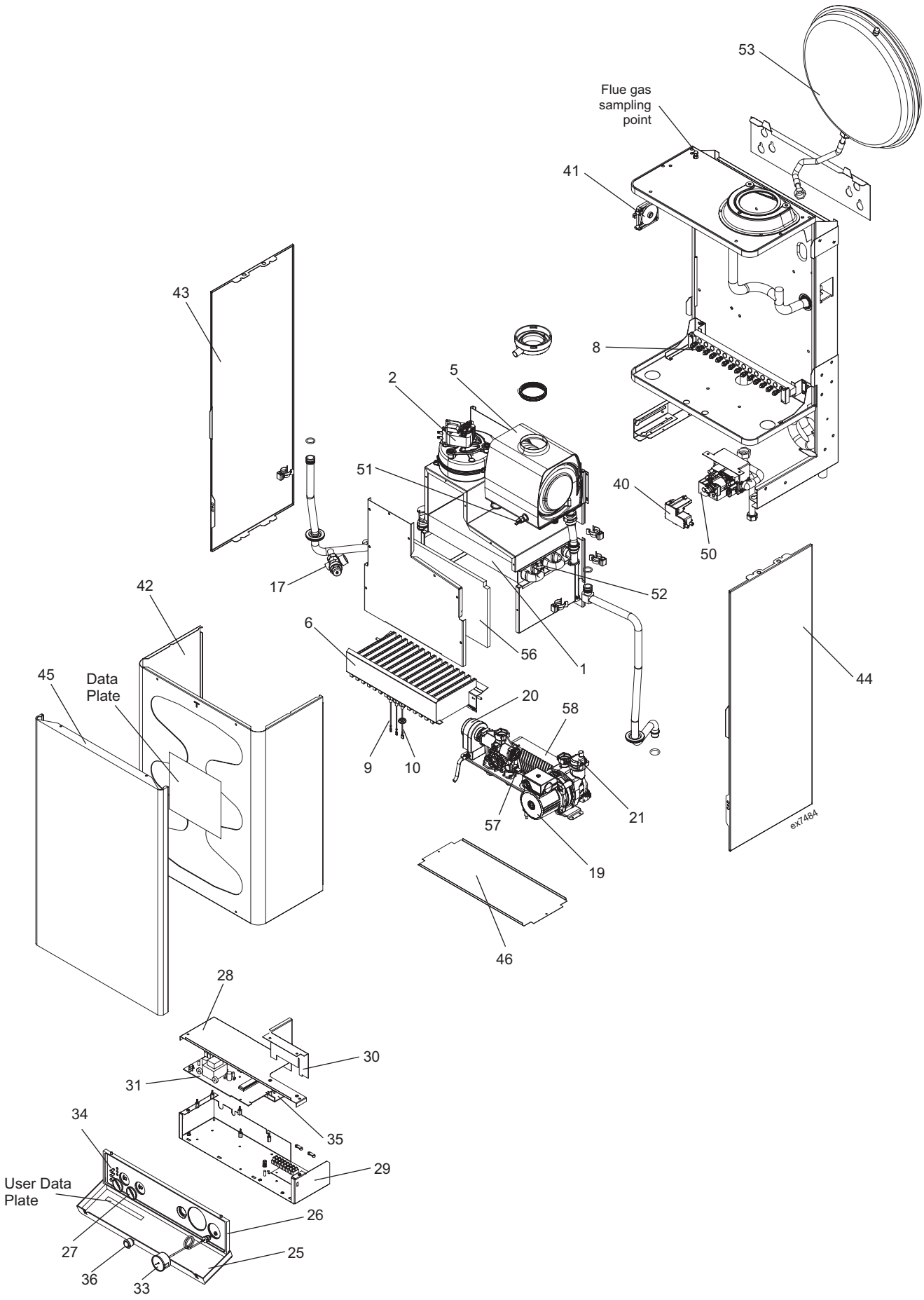

9 UNPACKING

The boiler is supplied fully assembled in one Pack A, together with a standard flue assembly for lengths up to 775mm, rear or side flue outlet, in Pack B.

Unpack and check the contents.
Refer to Frame 10 for Unpacking.

Pack A Contents

A The boiler
B Hardware pack and fittings
C Wall mounting plate
D These Installation & Servicing/ User's instructions
E Wall mounting template
F 1 year guarantee form
G Flue Restrictor - 1 off
24 kW - 39mm
28 kW - 43mm
32 kW - 45mm

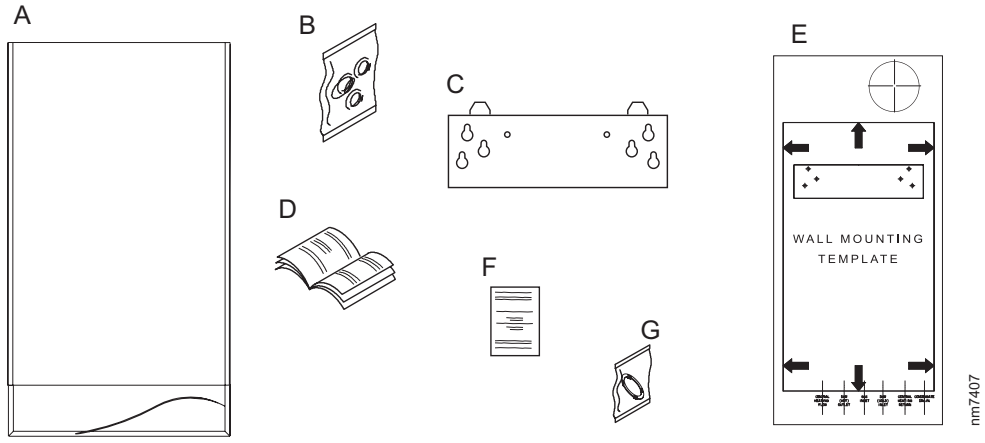

Hardware Pack & Fittings

A Isolation ball valve - CH - 2 off
B Isolation ball valve - DHW - 1 off
C 3/4" sealing washer - 2 off
D Bulkhead elbow - 1 off
E 12mm sealing washer - 2 off
F Gas cock - 1 off
G Gas cock washer - 1 off
H Wallplug - 2 off
J No 14x2in wood screw rd hd black - 2 off
K M5x10 pozi pan screw ZP - 1 off
L Turret clamp - 1 off
M Pressure relief valve discharge pipe - 1 off
N Pressure relief valve discharge pipe back nut - 1 off
P Pressure relief valve discharge pipe 15mm olive - 1 off

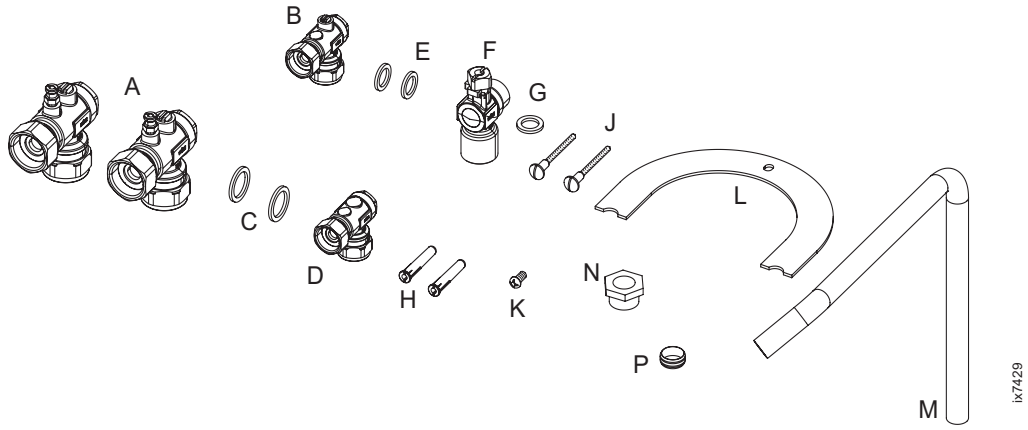

Pack B Contents

A Flue turret
B Flue terminal

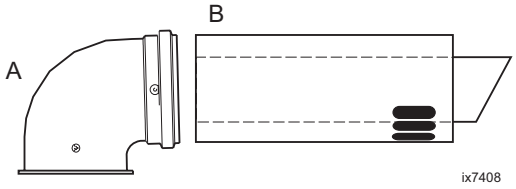

10 PACKAGING REMOVAL

1. Cut and remove straps.
2. Remove literature and wall mounting template.
3. Lift off outer sleeve.
4. Lift off top tray.
5. Leave boiler in bottom tray to protect exposed boiler connections during wall hanging.

Note. *Hardware pack contained within bottom tray at back of boiler. Ensure components are withdrawn before discarding bottom tray.*

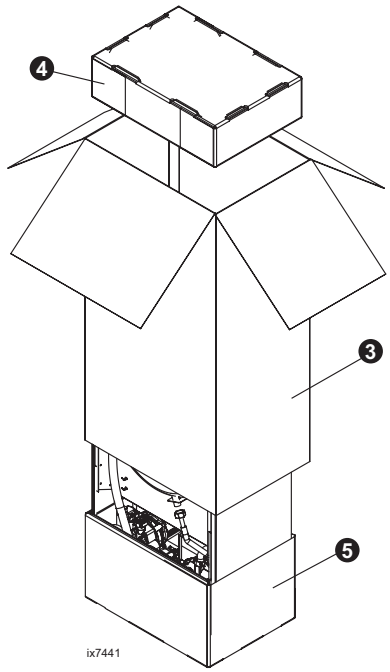

11 DETERMINING THE FLUE LENGTH AND FLUE PACKS REQUIRED

For the 100mm concentric flue system

Dimension X - Wall thickness.
Dimension L - Wall thickness plus boiler spacing.
Dimension R - Wall thickness plus boiler spacing.

FLUE KITS
Pack B - supplied as standard
Pack D - optional extension kit for side flue or rear flue outlet.
Refer to 'Flue Extension Ducts'
90° Elbow Kit - resistance is equivalent to 1m length of flue pipe
45° Elbow Kit - resistance is equivalent to 0.75m length of flue pipe

Note.
1. *The flue duct MUST be inclined at 1.5 degrees to the horizontal to allow condensate to drain back into the boiler and out through the condensate drain. (Only necessary if using one or more 'D' extension duct packs)*

Total Flue length dimension			Flue	
Rear flue dim. X+177	**L.H. Side flue dim. L+331**	**RH Side flue dim. R+119**	**Extra packs required**	**Boiler Size**
Up to 775 mm	Up to 775 mm	Up to 775 mm	none	C24, C28, C32
Up to 1725 mm	Up to 1725 mm	Up to 1725 mm	Pack D - 1 off	C24, C28, C32
Up to 2675 mm	Up to 2675 mm	Up to 2675 mm	Pack D - 2 off	C24, C28
Up to 3000 mm	Up to 3000 mm	Up to 3000 mm	Pack D - 3 off	C24

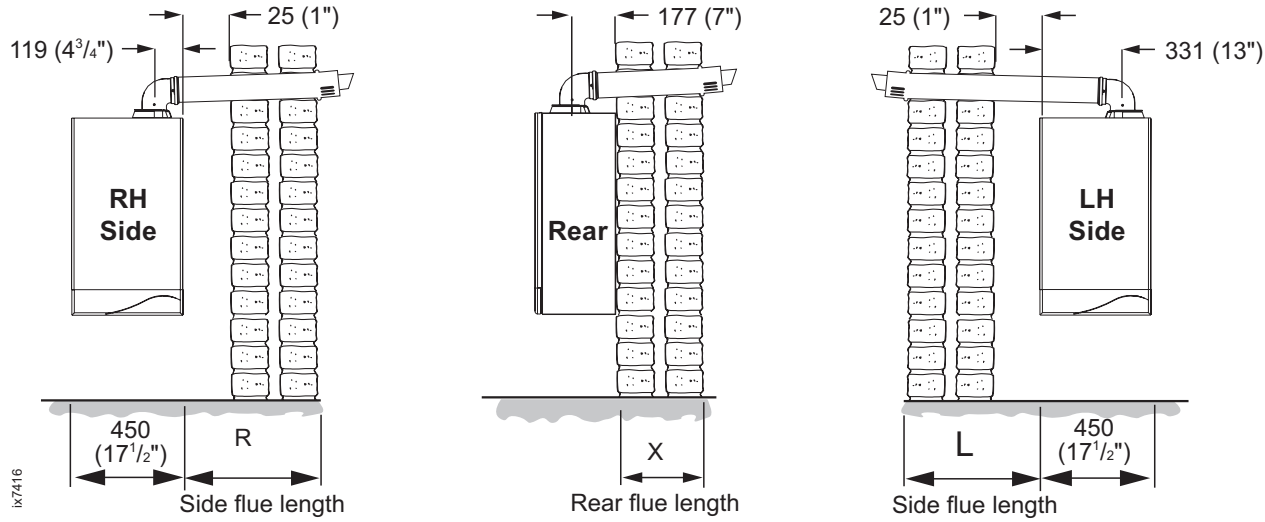

FLUE OUTLET

12 FLUE ASSEMBLY - Exploded View

IMPORTANT. ***DO NOT fit flue restrictor if flue length is greater than 775 mm ('B' Pack).***

An optional flue duct extension kit is required for wall thicknesses greater than :

LH Side	420mm ($16^1/_2$")
RH Side	630mm ($24^3/_4$")
Rear	600mm ($23^5/_8$")

LEGEND

1. Flue Elbow.
2. Flue Assembly.
3. Flue Restrictor.
4. M5 x 10 pozi pan screw.
5. Turret Clamp.

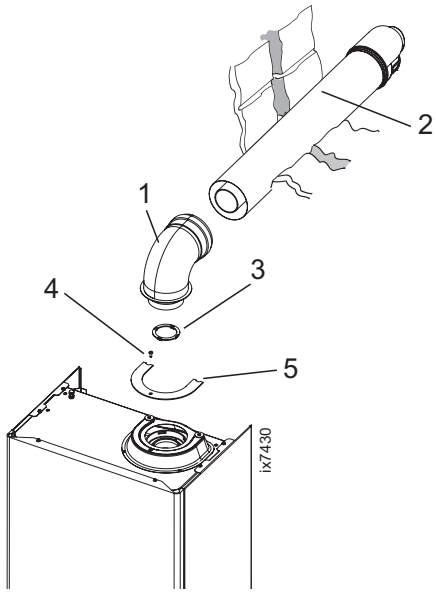

Rear flue arrangement shown

13 WALL MOUNTING TEMPLATE

Note.
The template shows the positions of the fixing holes and the rear flue outlet hole centre for standard installation. Care MUST be taken to ensure the correct holes are drilled.

1. Tape template into the selected position. Ensure squareness by hanging a plumbline as shown.
2. If fitting a side flue extend the flue centre line onto the side wall and measure in 175mm for standard installation.

   Note. *If using stand-off kit distance increases to 211mm.*

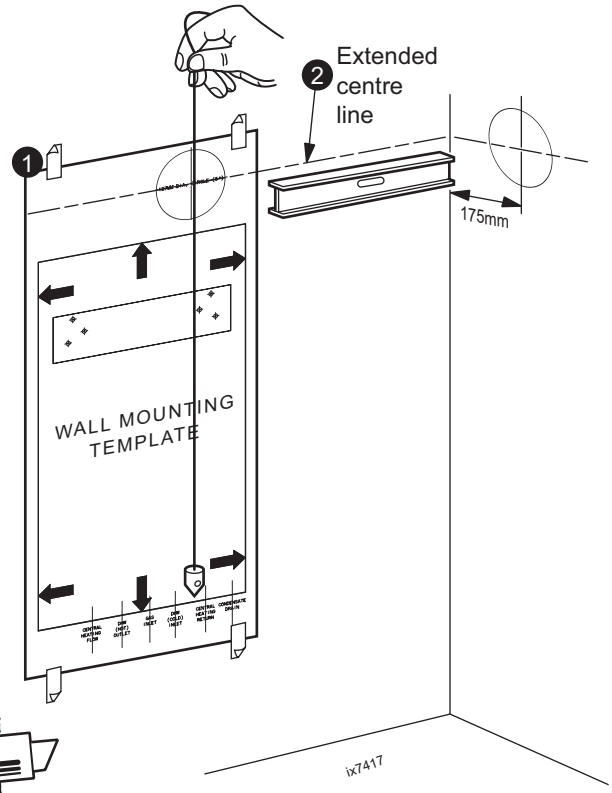

See wall mounting template

Flue duct hole offset V (mm)	10	20	30	50	60	80

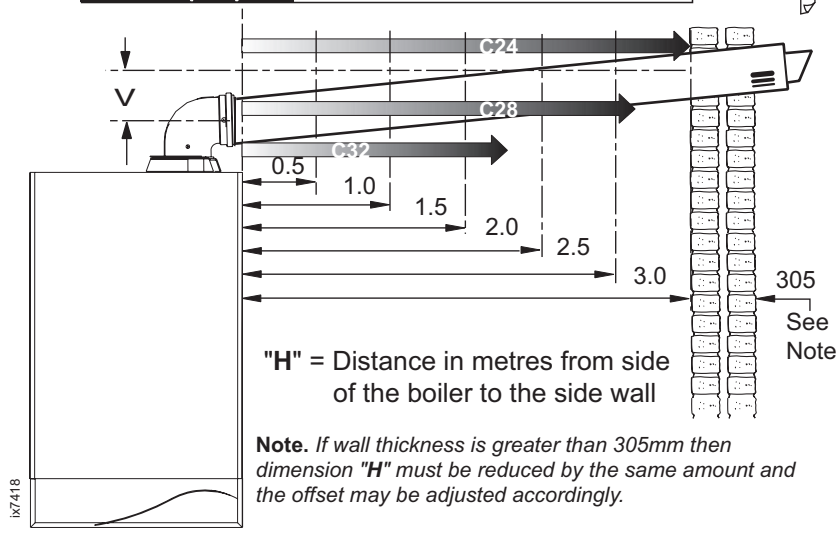

Note. *If wall thickness is greater than 305mm then dimension "**H**" must be reduced by the same amount and the offset may be adjusted accordingly.*

3. Mark onto the wall the following:
   - **a** The wall mounting plate screw positions (choose one from each group).
   - **b.** The position of the flue duct hole (see diagram).

   Note. *Mark the centre of the hole as well as the circumference*
4. Remove the template from the wall.

14 PREPARING THE WALL

IMPORTANT.

Ensure that, during the cutting operation, masonry falling outside of the building does not cause damage or personal injury.

1. Cut the flue hole (preferably with a 5" core boring tool), ensuring that the hole is square to the wall. Both wall faces immediately around the cut hole should be flat.

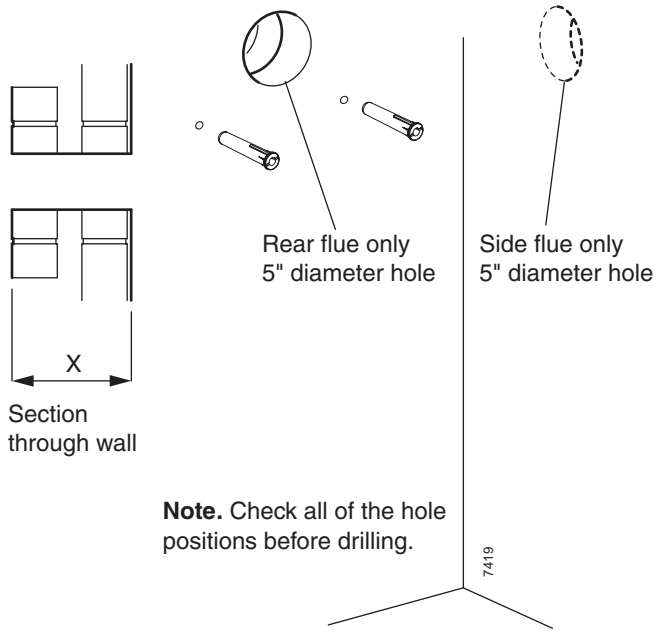

Note. Check all of the hole positions before drilling.

15 CUTTING THE FLUE - REAR **Wall thicknesses of 114 to 600mm**

Notes.

a. *If using the extension ducts go to Frame 17, 18 and 19.*

b. *If the stand-off frame is used it is essential add 33mm to 'X' the measured wall thickness when marking the flue (this will allow for the fitted frame).*

1. Measure and note wall thickness X. Refer to Frame 11.
2. Add 105mm (4 1/8") to dimension X and, measuring from the ring, cut both outer and inner tube. Ensure support spring clip is in position to facilitate cutting.
3. To ensure the tube is cut square, mark the flue all the way around.

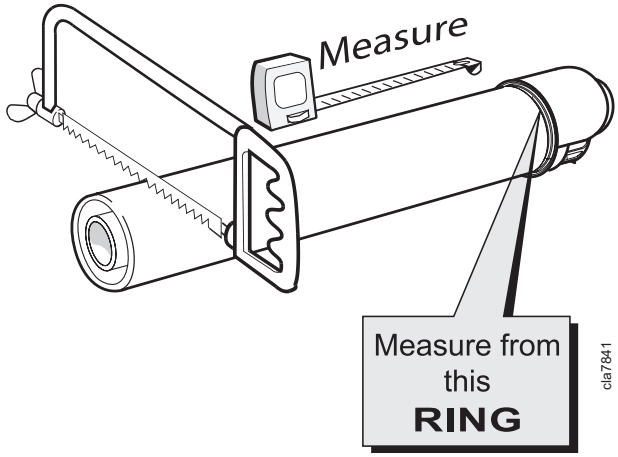

16 CUTTING THE FLUE - LH OR TO RH SIDE

Wall thicknesses of 114 to 420mm LH side or to 630mm RH side

Note. *If using the extension ducts go to Frame 17, 18 and 19.*

1. Measure and note side flue length L or R. Refer to Frame 11.
2. Add 284mm (11 $^{3}/_{16}$") to dimension L or 72mm (2 $^{13}/_{16}$") to dimension R and, measuring from the ring, cut both outer and inner tube. Ensure support spring clip is in position to facilitate cutting.
3. To ensure the tube is cut square, mark the flue all the way around.

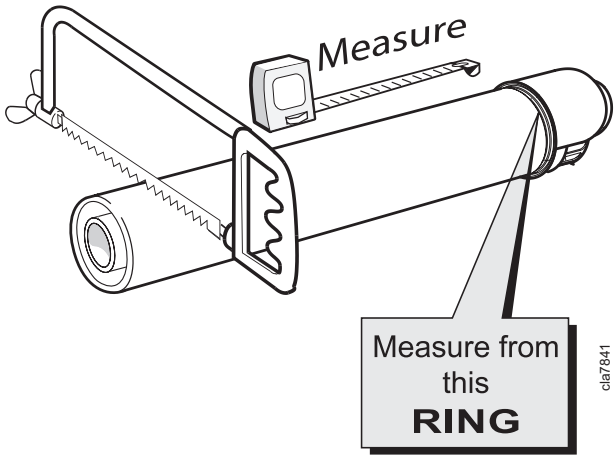

17 FLUE EXTENSION DUCTS - For flue lengths greater than 775mm

Pack D Flue extension duct kit contents

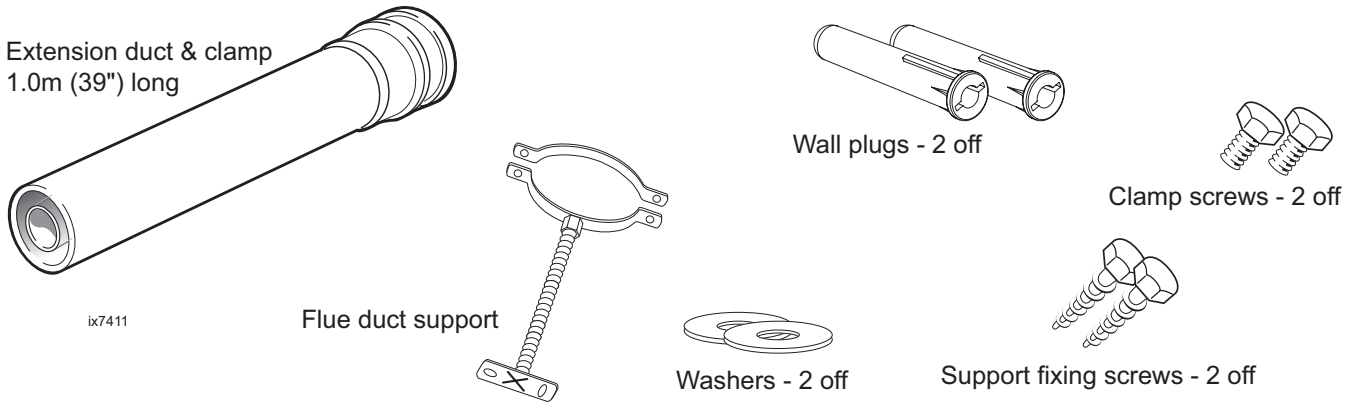

18 FLUE EXTENSION DUCTS - continued

Use a maximum of 3m extended flue ONLY (C24)

Use a maximum of 2.675m extended flue ONLY (C28)

Use a maximum of 1.725m extended flue ONLY (C32)

General arrangement

1. A ***maximum*** of 2 extension ducts for the C24/ C28 and a maximum of 1 extension duct for the C32 (one suitably cut) plus the standard flue duct may be used together.

2. Flue extensions of greater length than 1m (39") should be supported with the bracket provided, suitably adjusted. Refer to Frame 17.

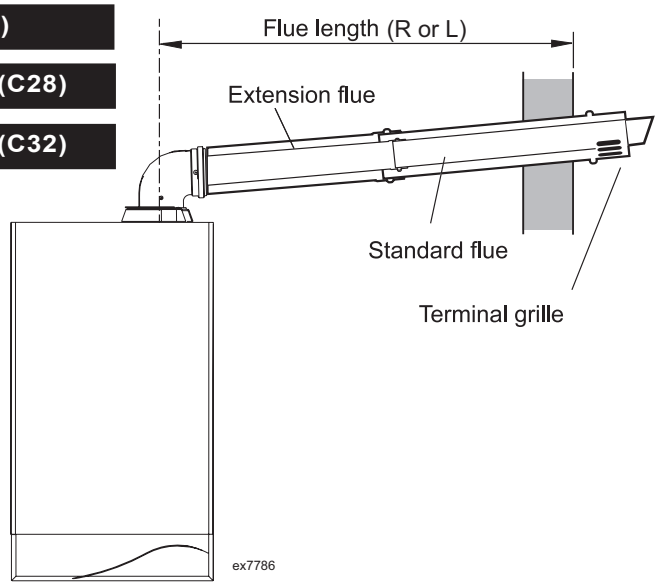

Note. *Side flue shown*

19 FITTING THE KIT

1. Fit the inner flue extension duct onto the inner flue duct.
2. Fit the outer flue extension duct onto the outer air duct.
3. Repeat steps 1 and 2 if a second flue extension is required.
4. Measure and mark the flue length required onto the flue, measuring from the ring near the terminal. (Refer to Frames 11 and 16 for the detail of flue length calculation.)
5. To ensure a square cut, mark the flue all the way around.
6. De-burr the cut edges.

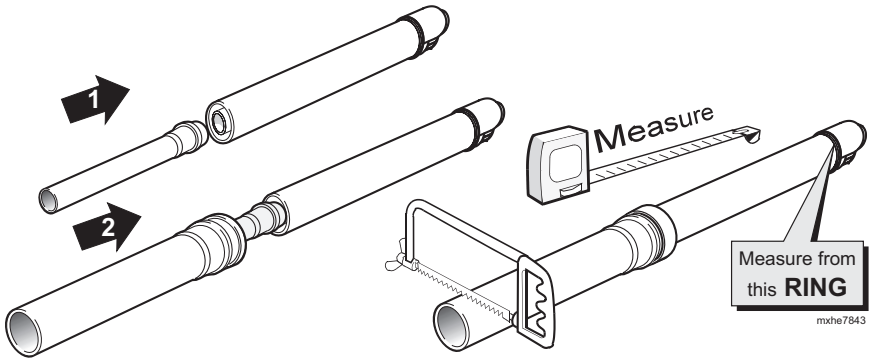

20 FITTING THE OPTIONAL ROOF FLUE KIT (Flat or Pitched)

Note.
A flat or pitched roof flashing plate (not supplied) is required before proceeding with the installation of this kit.

This kit is suitable for both flat and pitched roof terminations, using a concentric flue to run vertically from the top of the boiler and terminating above roof level.

Connection to the top of the boiler is made using both a separately supplied vertical connector and a 80/125 adaptor.

WEATHER PROOFING

Where the flue passes through the roof line an adequate seal must be made. This is achieved by using either:

- Flat roof weather collar

or

- Universal weather collar.

ACCESSORIES

Flue Duct Extension Kits are available for flue lengths extending beyond 1m. These packs contain 1m extension ducts and may be cut to the desired length.

If the offset vertical option is used an elbow Kit is required. For a full accessories list refer to page 7, Optional Extras and Frame 23, Flue Arrangement.

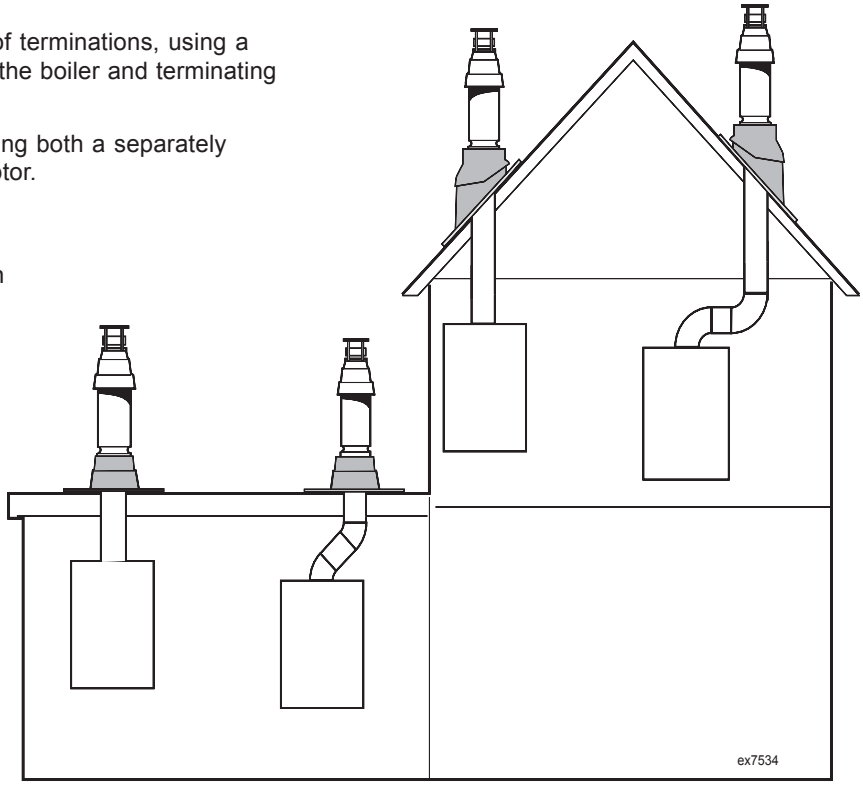

21 ROOF FLUE KIT CONTENTS / OPTIONS

A. Flue assembly with terminal
B. Flue seal collar
C. 3,5x13 screw
D. Pitched roof tile/flat roof tile weather collar
E. Vertical connector (60/100)
F. Retention flange/screw
G. Adaptor (60/100 to 80/125)
H. Roof flue extension duct kit (80/125)
I. 90° elbow kit (80/125)
J. 45° elbow kit (80/125)

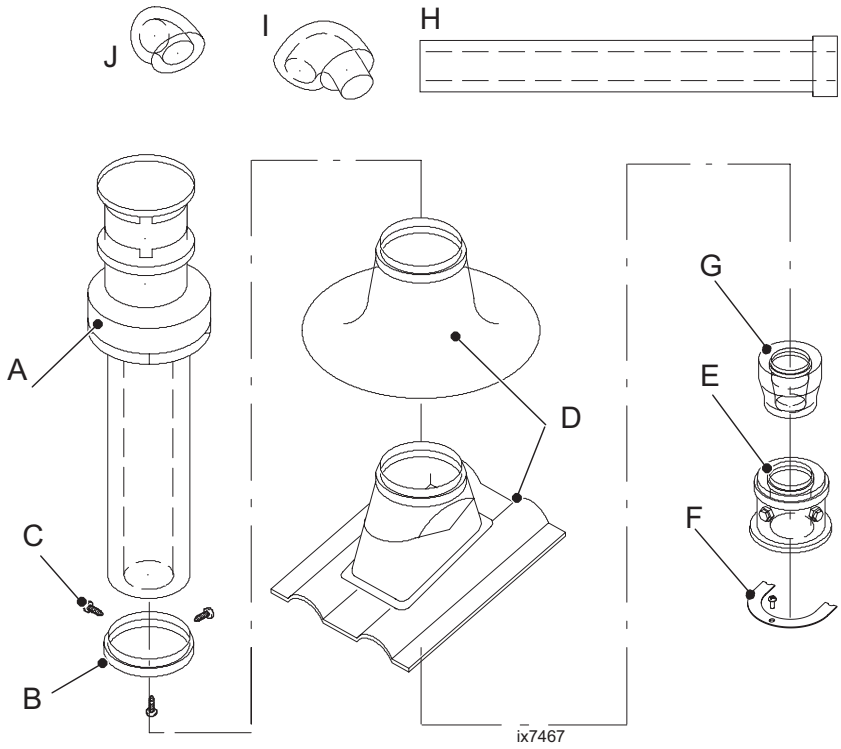

Note. *Items D, E, G, H, I and J are not supplied with the roof flue kit.*

FLUE OUTLET

22 FLUE TERMINAL POSITION

The terminal should be positioned so that products of combustion can safely disperse at all times.

Pluming may occur at the termination so, where possible, terminal positions where this could cause a nuisance should be avoided.

Minimum dimensions are shown below

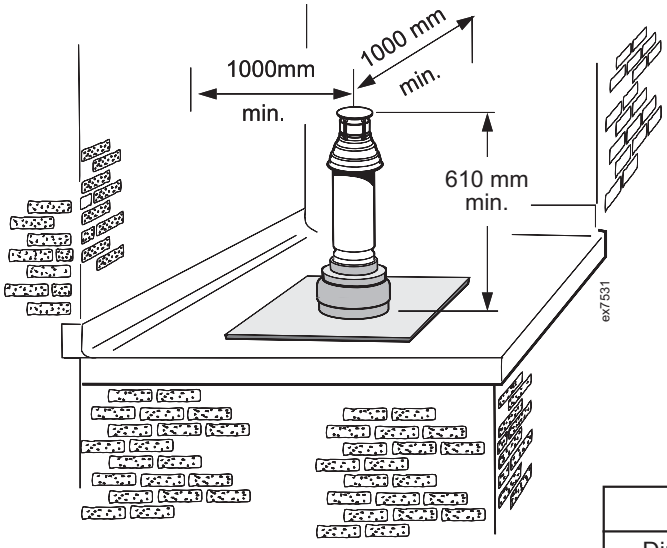

Flat roof - with structure

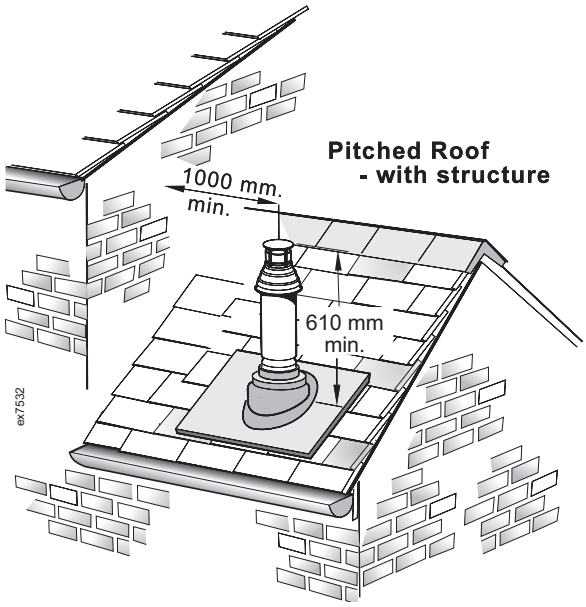

Terminal Position	Minimum Dimension
Directly below an opening, air brick, windows, etc.	300 mm
Below plastic / painted gutters	300 mm
Painted surface	300 mm
Below eaves or balcony	500 mm

23 FLUE ARRANGEMENT

Part No.	Description	80/125 Quantity C24	C28	C32
n/a	Maximum Flue Length (m)	16	12	8
201 548	Flue ext. 80/125	15	11	7
201 547	Terminal Vertical Roof 80/125	1	1	1
201 191	Weather Collar Pitched Roof	1	1	1
201 192	Weather Collar Flat Roof	1	1	1
201 550	90° Elbow kit (80/125)	4	4	4
201 551	45° Elbow kit (80/125)	4	4	4
201 184	Vertical Connector	1	1	1
201 549	Adaptor (60/100 - 80/125)	1	1	1

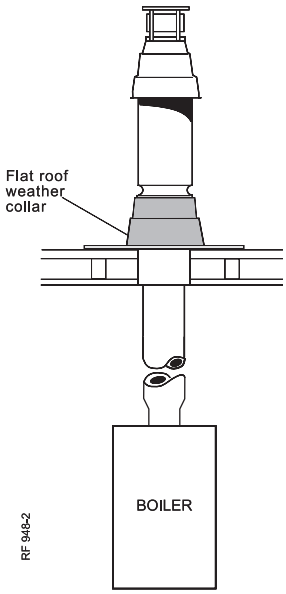

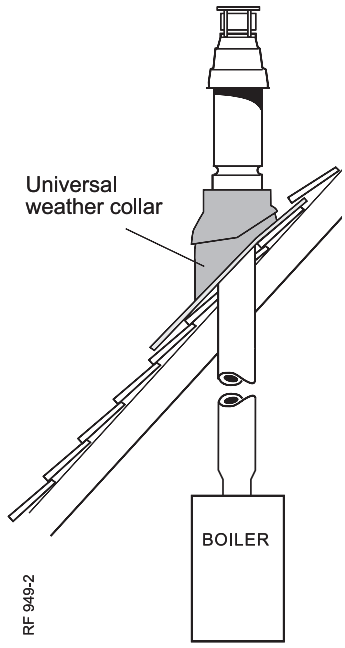

Note.
The equivalent flue length resistance of the 90° elbow kit (80/125) is 2 m and the 45° elbow kit (80/125) is 1.0 m.

24 ASSEMBLING THE ROOF FLUE KIT

Determine the correct height that the flue should terminate above the roof. If after calculating or measuring the overall flue height from the top of the boiler, it is necessary to cut both pipes of assembly A, then ensure they are cut equally leaving the inner flue tube longer than the outer air tube as supplied. (Refer to No. 6 below)

Ensure the cut pipe ends are free from any burrs.

1. Ensure the flue seal collar B is located onto the flue assembly A.
2. Position the roof flashing plate D (supplied separately) over the hole cut in the roof and insert flue assembly A from the roof end.
3. Push fit the vertical connector E (supplied seperately) into the boiler flue connection and retain with the retention flange F (supplied with the boiler) and securing screw. **ENSURING THE GASKETS IN THE BOILER FLUE OUTLET ARE CORRECTLY FITTED.**
4. "Push" fit the 60/100 to 80/125 adaptor G (supplied separately) into the vertical connector.
5. "Push" fit extension duct H (if required (supplied separately)) and the roof flue kit assembly A into the adaptor G.
6. If the last extension duct requires cutting, measure the distance (outer ducts) between the duct and the terminal and add 100 mm to this dimension. This gives the length of the last extension duct.

   Note. *Check the position of the inner flue duct relative to the outer duct on the assembled extension duct(s) and ensure the terminal flue duct is cut longer than the air duct to ensure engagement in the final flue duct seal.*
7. Slide down and position the flue seal collar B over the roof plate D and secure it with the 3 screws C to the flue assembly A.
8. Finally ensure the roof flashing plate D is correctly sealed to the roof.

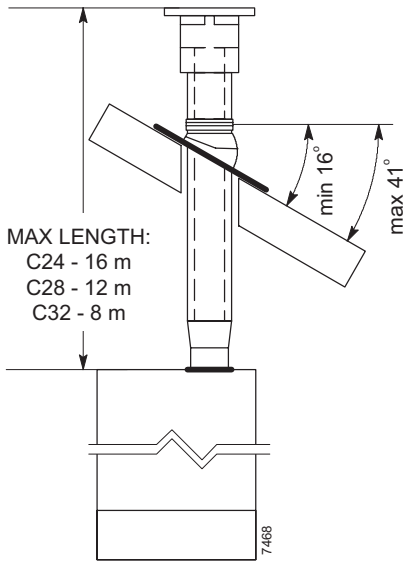

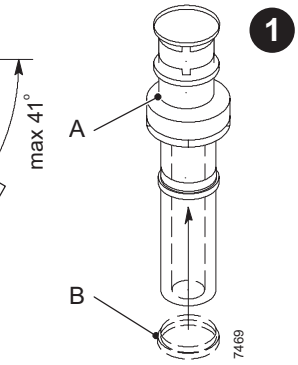

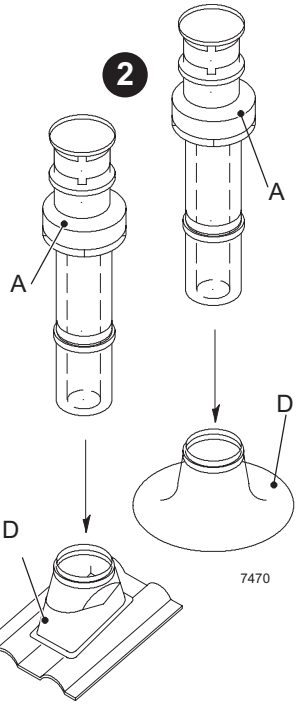

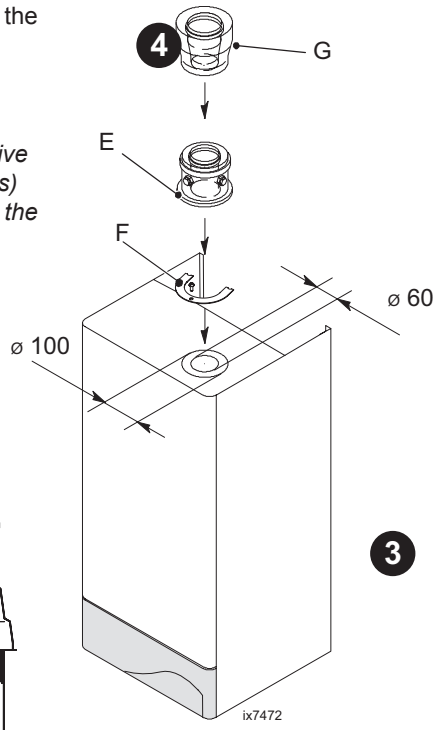

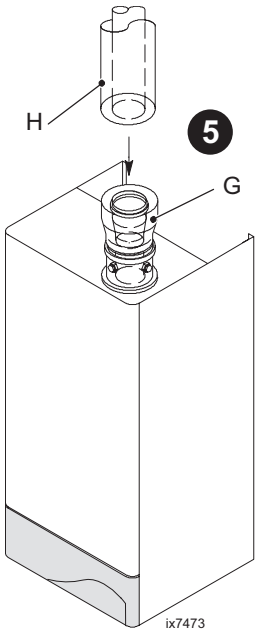

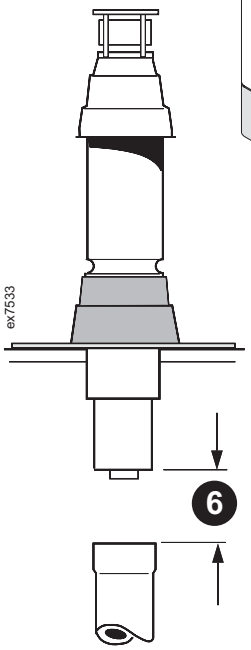

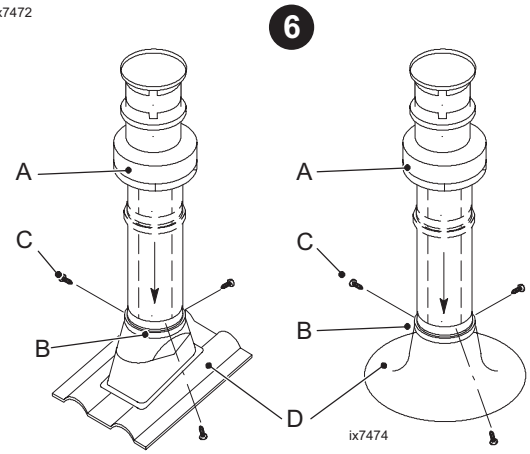

FLUE OUTLET

25 FITTING THE OPTIONAL FLUE FINISHING KIT

Contents:

Outer wall sealing plate - 1off
Inner rubber wall seal (White) - 1 off
Outer rubber wall seal (black) - 1 off
Wall plugs - 4 off
Screws No. 10x2" - 4 off

1. Fit black outer wall seal over terminal and ensure the retaining rim is located in the terminal depression.
2. Fit flue pipe assembly through the hole previously cut in wall.
3. Fit white inner wall seal and push up to inner wall.
4. Fit turret to boiler (see Frame 30) and to the flue pipe assembly.
5. Fit outer wall sealing plate over outer wall seal and retain with the 4 screws and wall plugs provided.

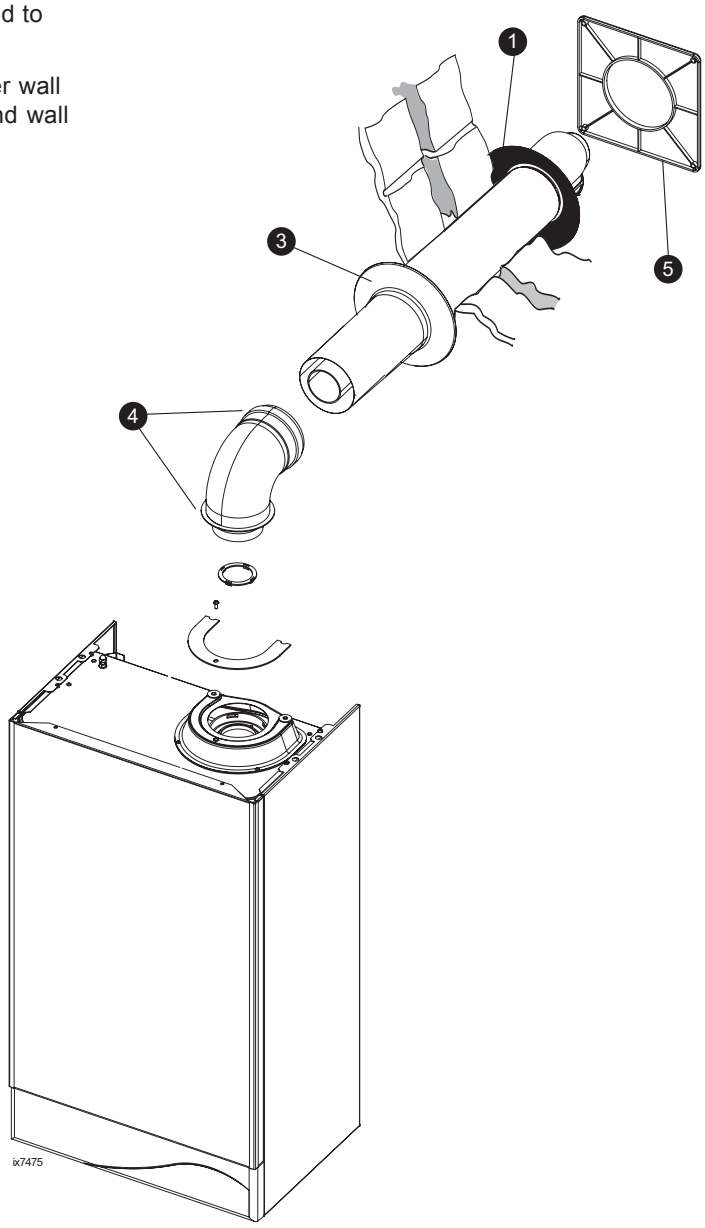

26 FITTING THE WALL MOUNTING PLATE

Fit the wall mounting plate either:

a. Directly to the wall

- Insert wall plugs.
- Put the screws into the wall plugs and leave 10mm proud
- Hang the frame onto the screws (take care to use the same hole position from each group as previously chosen with the wall template) and tighten up.

or

b. If using optional Stand-Off Frame or Pre-Piping Frame, refer to instructions provided with kit.

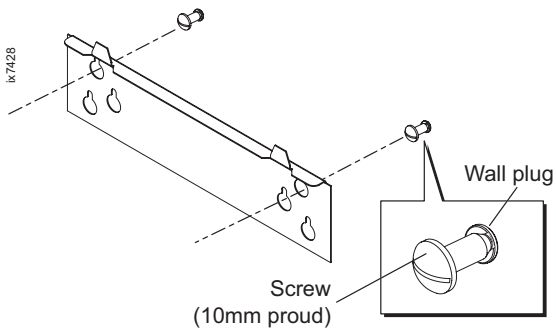

27 CONDENSATE DRAIN

Refer also to the British Gas document: 'Guidance Notes for the Installation of Domestic Gas Condensing Boilers' (1989).

The boiler comes with an integral 100mm condensate trap. The boiler condensate drain must be connected to a drainage point, preferably within the building. This condensate drainage should be run in standard 21.5mm overflow pipe. Before fitting drain pipe remove plastic plug from connection. Connection to the boiler is by push fit into the rubber collar protruding from the boiler.

Ensure that the condensate trap is full of water before commissioning the boiler . Refer to Frame 30.

The routing of the drain must be made to allow a minimum fall of 1 in 20 away from the boiler, throughout its length.

The drainage pipework must be arranged so that obstruction (e.g. through freezing) of external drainage pipe does not give rise to spillage within the dwelling.

IMPORTANT.
If excessive external pipework cannot be avoided an additional siphon kit or a condensate removal pump (both available as an option) and insulation are recommended to prevent possible freezing.

All pipework and fittings in the condensate drain system must be made of plastic. No other materials may be used.

The drain outlet on the boiler is standard 21.5mm overflow pipe. This size must not be reduced in any part of its length.

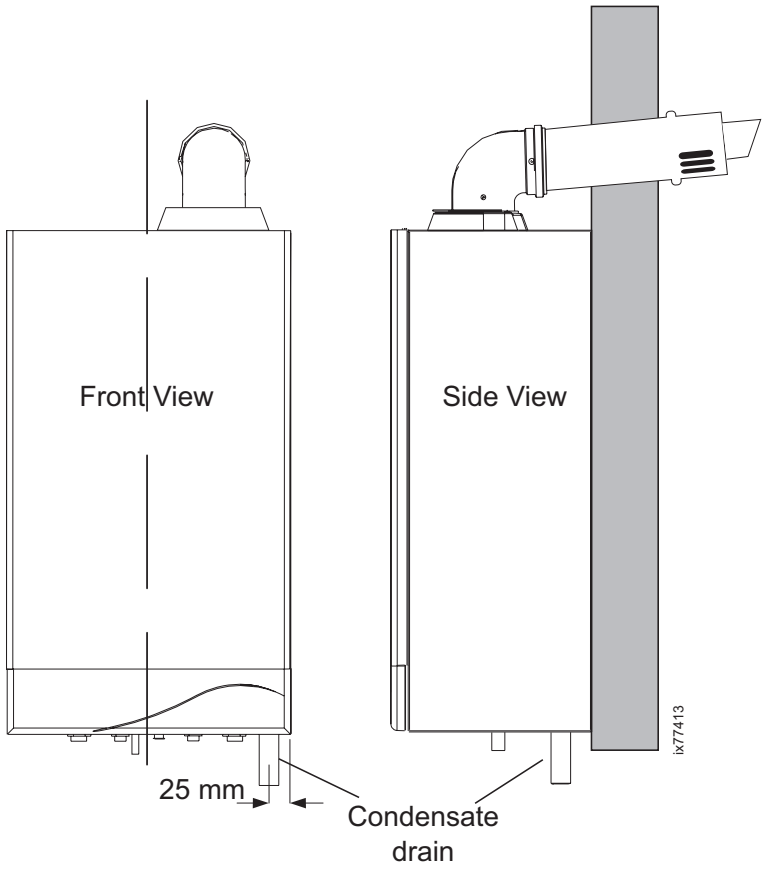

28 MOUNTING THE BOILER

Note. *The boiler may require two men to lift it onto the wall mounting plate.*

1. Lift the boiler by the packaging base onto the plate, locating it over the tabs at the top of the bracket. Ensure the boiler is correctly retained on the wall mounting plate tabs. Remove packaging base.

   Note. *If side clearance is limited, the packaging base can be removed prior to lifting.*

2. Ensure the plastic plugs are removed from both the CH and DHW Connections. **N.B.** Some spillage of water may occur from the connections when mounting the boiler onto the wall plate.
3. Fit the two 22mm CH isolating ball valves to the two CH connections on the boiler using the two 22mm washers provided.
4. Fit the 15mm isolating ball valve to the DHW inlet connection on the boiler using the 12mm washer provided.
5. Fit the 15mm bulkhead elbow to the DHW outlet connection on the boiler using the 12mm washer provided.
6. Fit the 15mm gas cock to the gas connection on the boiler using the gas cock seal provided.

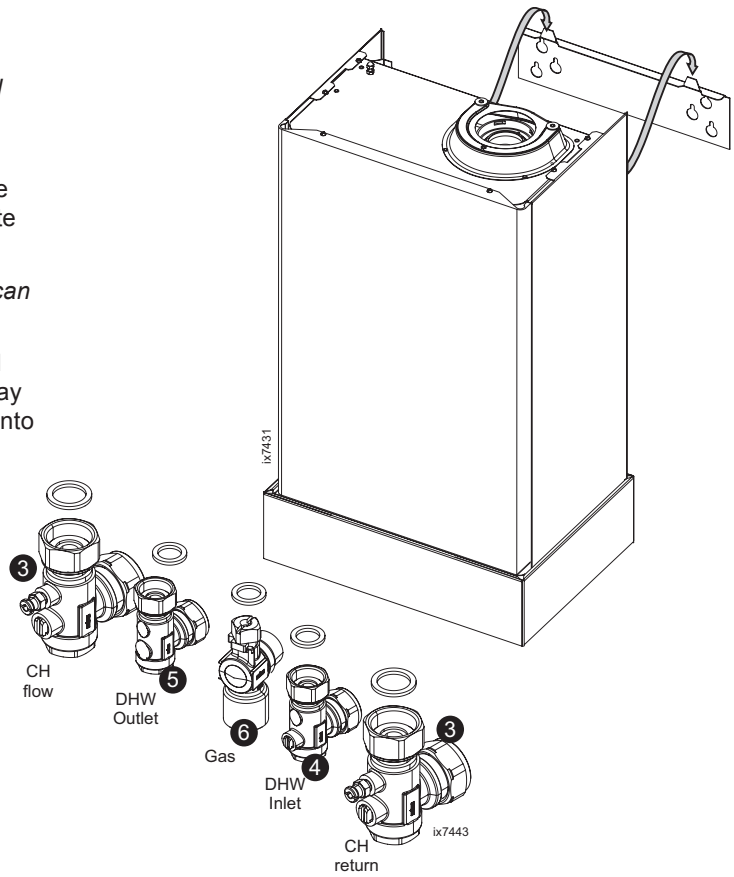

29 CONNECTIONS - CH, DHW AND GAS

Notes.

1. ***Central Heating***
   For heating loads in excess of 60,000 Btu/h use 28mm x 22mm connectors to connect the boiler flow and return pipes to 28mm system pipework.
2. ***Central Heating, Domestic Hot Water and Gas***
   Do not subject any of the isolating valves to heat as the seals may be damaged.
3. ***Gas***
   Refer to Frame 2 for details of the gas connection position.

30 CONNECTING THE FLUE TO THE BOILER

Note. *Before fitting the flue turret fill the condensate trap or siphon trap within the boiler by pouring a cupful of water into the flue outlet A. Take care to ensure that the water is only poured into the flue outlet, and does not spill into the boiler casing.*

IMPORTANT. ***DO NOT fit flue restrictor if flue length is greater than 775 mm ('B' Pack).***

1. "Push" fit the flue restrictor (if necessary) into centre of plastic flue outlet. Refer to Frame 12.
2. Insert the flue assembly through the prepared hole in the wall.
3. Locate the flue turret on the top of the boiler. **CHECK THAT THE FLUE SEAL LOCATED IN THE TOP OF THE FLUE MANIFOLD IS SECURE AND GIVING AN EFFECTIVE SEAL.**
4. Locate the flue into the turret and push to ensure full engagement.
5. Secure the flue turret on top of the boiler by inserting the open ends of the turret clamp under the 2 studs and fixing it in the middle with the single M5 x 10mm pozi-hex screw provided.
6. **Flues over 1 metre long.**
   Fix the flue support bracket to the wall, using the 2 wall plugs and wood screws.

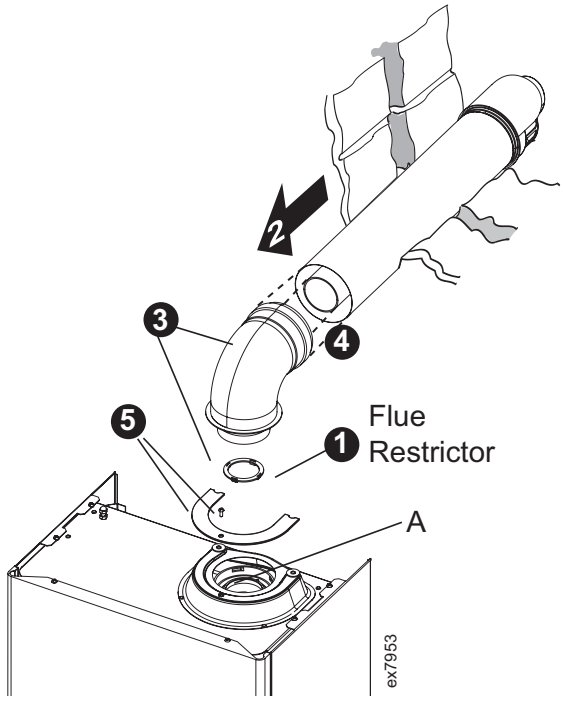

31 PRESSURE RELIEF VALVE DRAIN PIPE

The pressure relief valve is located at the bottom LHS of the boiler.

Remove front panel. See Frame 44.

The pressure relief pipe (to be found in the hardware pack) must be fitted to the pressure relief valve and sealed with the olive and back nut provided. Ensure the pipe is extended so that the discharge of water or steam cannot create a hazard to the occupants of the premises or damage the electrical components and wiring.

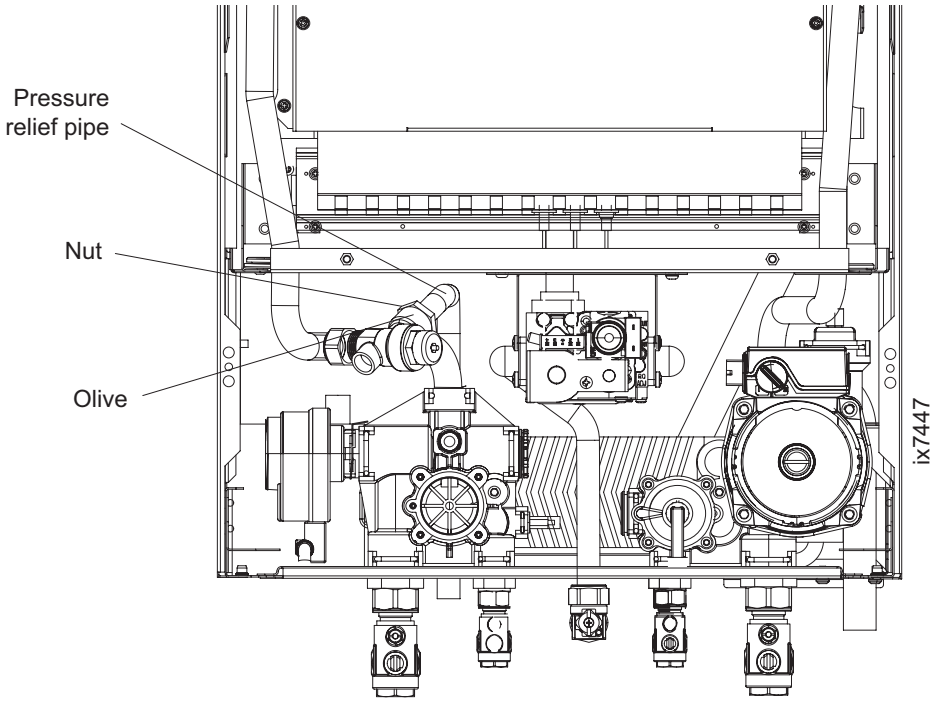

32 FILLING

Central Heating

1. Remove the front, RH side and bottom cover panels. See Frames 44, 45 and 46.
2. Ensure the CH isolating valves are open.
3. Open the stopcock at the filling point connection to the CH system until water is heard to flow.
4. Open each radiator vent starting at the lowest point of the system and fully fill and vent the system.
5. Bleed air from the pump and ensure it is free to rotate.
   - **A.** Remove the pump vent plug
   - **B.** Using a screwdriver, rotate the shaft several times
   - **C.** Replace the pump vent plug.

     Note. *Some slight water leakage will occur.* ***Ensure control box wiring is protected.***
6. Ensure the pressure indicated on the pressure gauge is between 1 and 1.5 bar.

Domestic Hot Water

1. Close all hot water draw off taps.
2. Open the cold water inlet valve.
3. Slowly open each draw off tap and close only when clear and air bubble free water flows out.

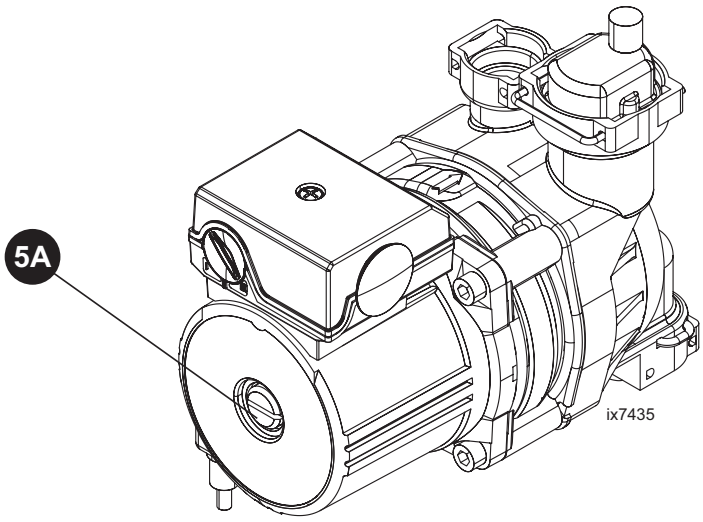

33 ELECTRICAL CONNECTIONS

***WARNING*. This appliance MUST be earthed**.

A mains supply of 230 V ~ 50 Hz is required.

Mains wiring should be 3 core PVC insulated flexible cord NOT LESS than 0.75mm^2 (24x0.2mm) and to BS. 6500, Table 16. (0.5mm^2 flex is not acceptable - for mechanical, not electrical reasons.)

Mains wiring external to the boiler MUST be in accordance with the current I.E.E. (BS7671) Wiring Regulations and any local regulations.

For Ireland reference should be made to the current ETCI rules for electrical installations.

The supply connection is intended to be made via a double pole switch having a 3mm (1/8") contact separation in both poles, serving only the boiler and system controls.

The fuse rating should be 3A.

34 INTERNAL WIRING

INCOMING MAINS WIRING DETAIL

To gain access to the power supply and external controls terminal block:

1. Remove the screws and the cover panel.
2. Remove the control box fixing screws.
3. Pull the control panel forward.
4. Remove the screws and the service panel.

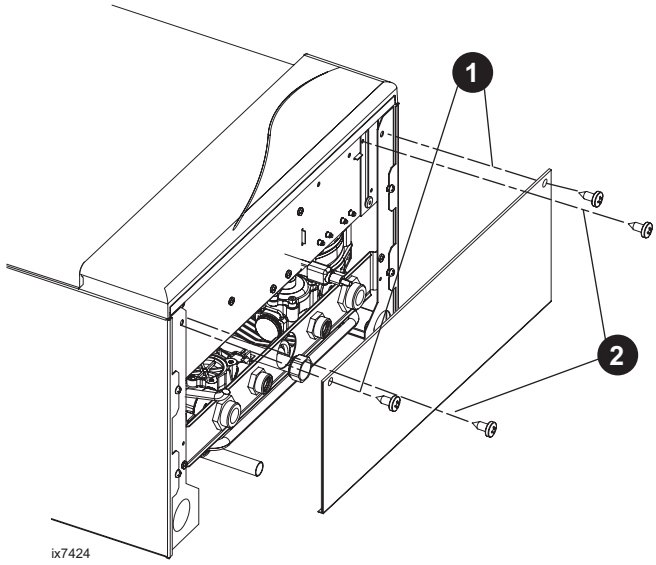

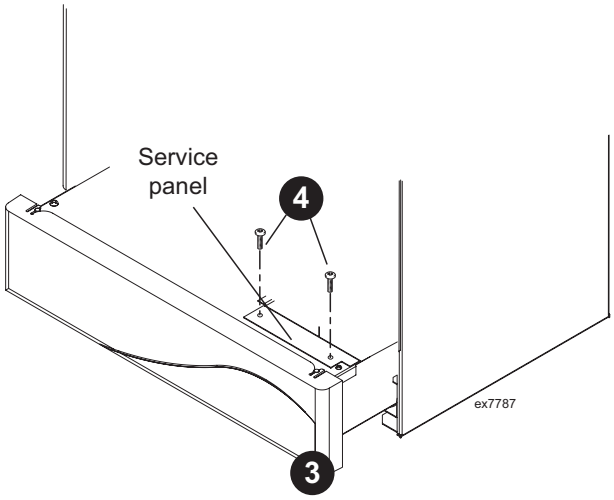

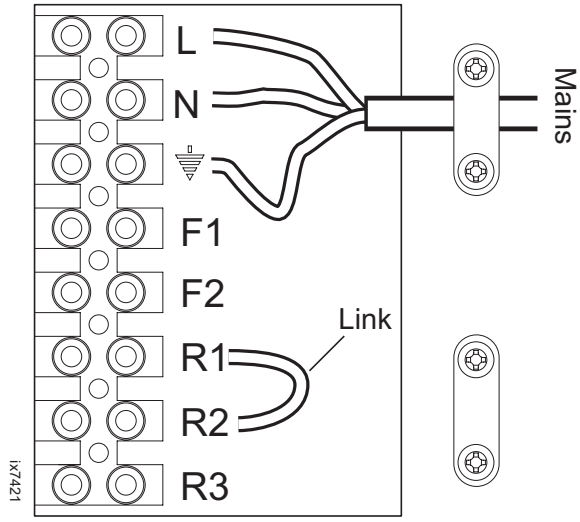

LEGEND

L	Live
N	Neutral
⏚	Earth
F1	Frost Stat Switched Live
F2	Frost Live Feed
R1	Room Stat Switched Live
R2	Room Live Feed
R3	Programmer Common SWL

Note. *Ensure that the lengths of the current conductors are shorter than the earth conductor so that if the cable slips in its anchorage the current carrying conductors become taut before the earth conductor.*

35 EXTERNAL ELECTRICAL CONTROLS

WARNING. ***When the boiler is powered 'ON' mains voltage is present on terminals "F2" and "R2". PLEASE TAKE CARE.***

Wiring external to the boiler MUST be in accordance with the current I.E.E. (BS. 7671) Wiring Regulations.

For Ireland reference should be made to the current ETCI rules for electrical installation.

The controls internal fuse is a 2A fast blow 250V rated.

Lock the flexible cords in place with the clamps provided.

ELECTRICAL CONNECTIONS FOR A COMBI BOILER

Optional Programmer Kit

An optional 7 day digital programmer or 24hr mechanical programmer kit is available with its relevant instructions.

Room Thermostat

This should be wired as shown in diagram A.

Frost Protection

excel HE appliances are provided with a built in anti-freeze system that operates the boiler when the temperature is below 5°C. Internal frost protection operates regardless of the position of the main switch and CH heating thermostat knob (B). Therefore, when the boiler is not lit and used in cold weather, with consequent risk of freezing, the supply to the boiler should be left switched on.

Central heating systems fitted wholly inside the house do not normally require frost protection as the house acts as a 'storage heater' and can normally be left at least 24 hours without frost damage.

However, if parts of the pipework run outside the house or if the boiler will be left off for more than a day or so then a frost thermostat should be wired into the system.

To maintain frost protection with the programmer selector switches set to OFF, the mains supply and the boiler panel controls MUST be left in the running position.

The frost thermostat should be sited in a cold place but where it can sense heat from the system.

Wiring should be as shown, with minimal disturbance to other wiring.

External Programmers

This should be of the single channel type (as this boiler does not incorporate a pre-heat facility for the instantaneous hot water service).

Programmers with room thermostat - see diagram B.

A No Programmer

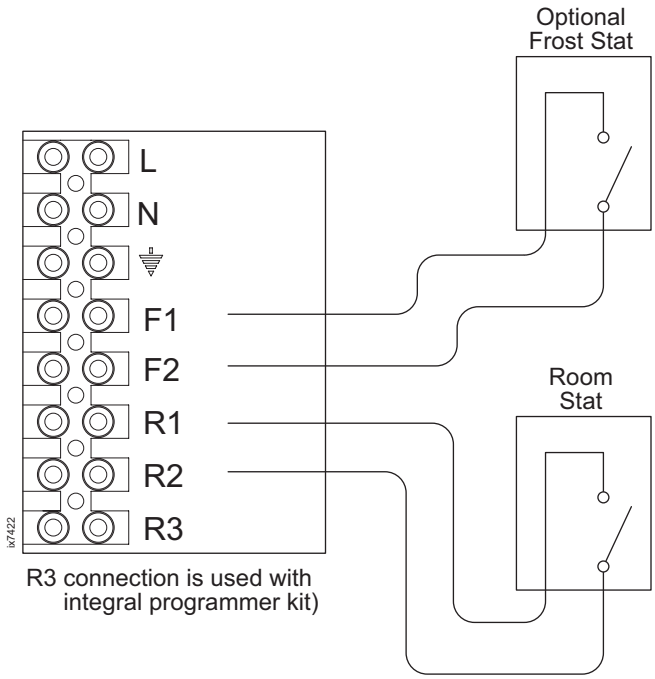

B External Programmer

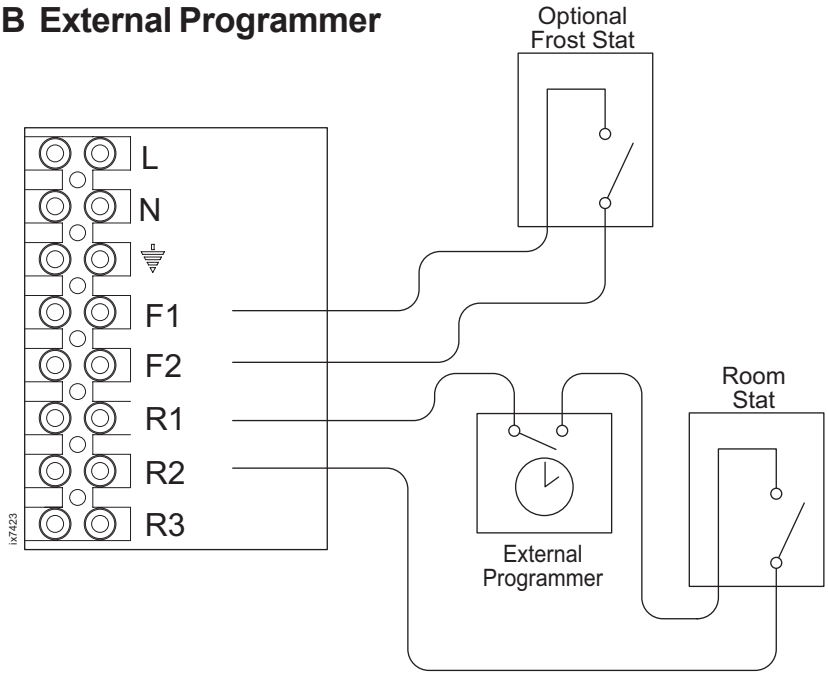

Earths are not shown for clarity but must never be omitted.

Note. *These diagrams are schematic only and do not show external terminal strips etc.*

36 PICTORIAL WIRING DIAGRAM

LEGEND

b - blue	**br** - brown	**or** - orange	**r** - red	**w** - white	**g/y** - green/yellow
bk - black	**gr** - grey	**pk** - pink	**v** - violet	**y** - yellow	

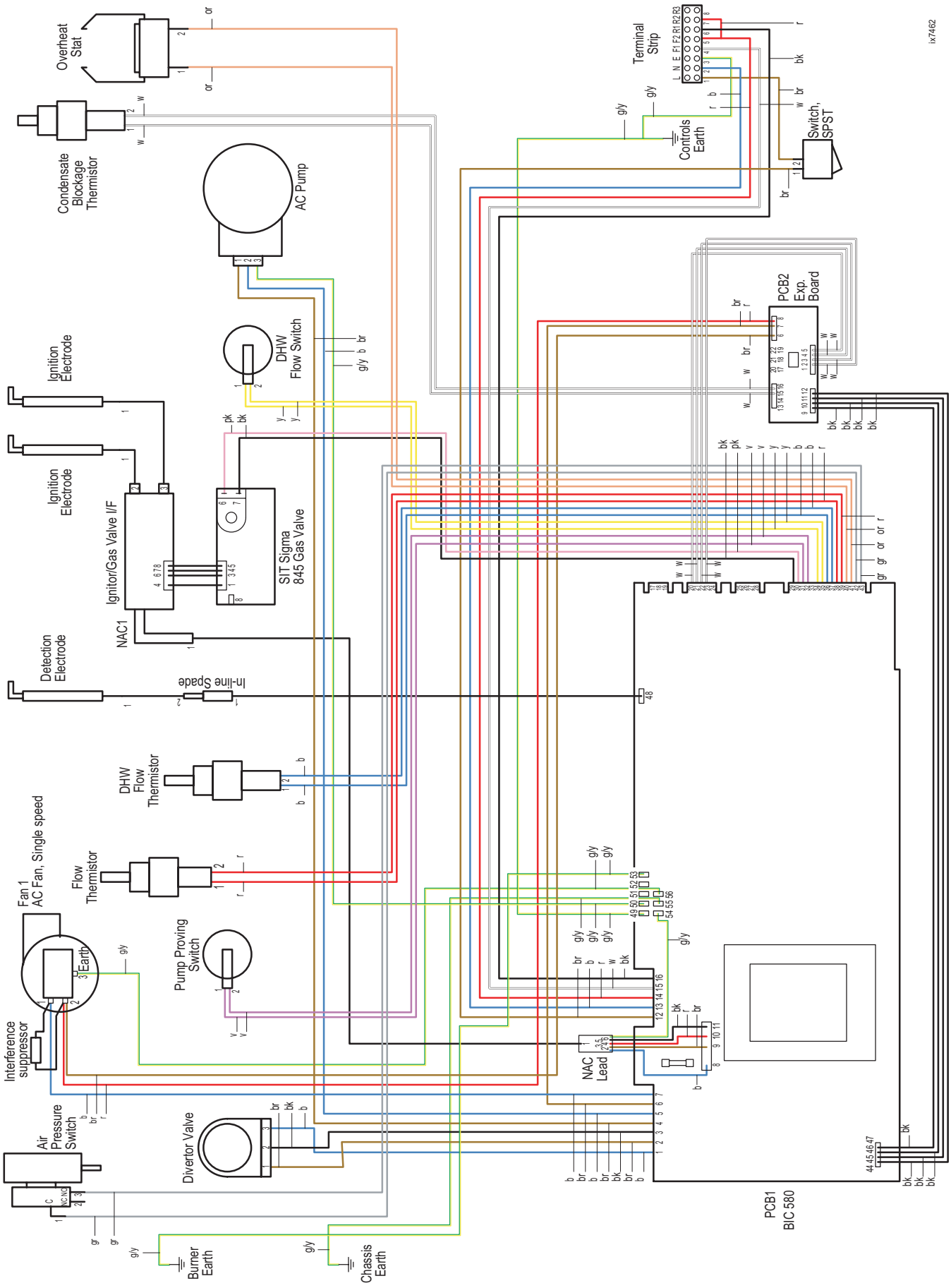

37 FUNCTIONAL FLOW WIRING DIAGRAM

LEGEND

b - blue	**gr** - grey	**v** - violet
bk - black	**or** - orange	**w** - white
br - brown	**pk** - pink	**y** - yellow
	r - red	**g/y** - green/yellow

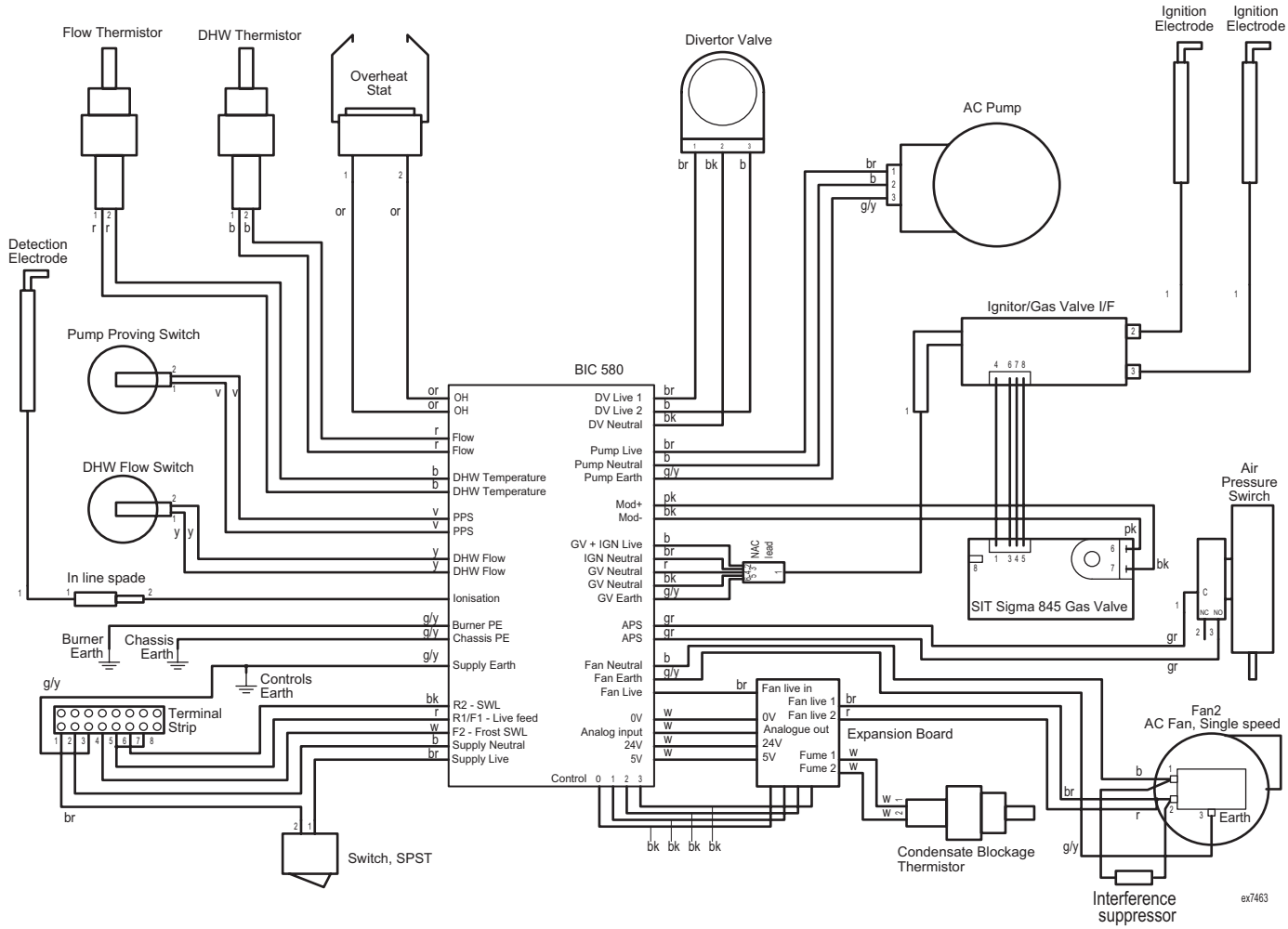

38 COMMISSIONING AND TESTING

A. Electrical Installation

1. Checks to ensure electrical safety should be carried out by a competent person.
2. ALWAYS carry out the preliminary electrical system checks, i.e. earth continuity, polarity, resistance to earth and short circuit, using a suitable test meter.

B. Gas Installation

1. The whole of the gas installation, including the meter, should be inspected and tested for soundness and purged in accordance with the recommendations of BS. 6891.
   In IE refer to IS.813:2002.
2. Purge air from the gas installation by the approved methods only.

C. Flue Sealing

1. Check the integrity of the flue outlet and air inlet system to the boiler ensuring no leaks are evident from piping joints or flue/air sampling points.

WARNING. **Whilst effecting the required gas soundness test and purging air from the gas installation, open all windows and doors, extinguish naked lights and *DO NOT SMOKE.***

39 INITIAL LIGHTING

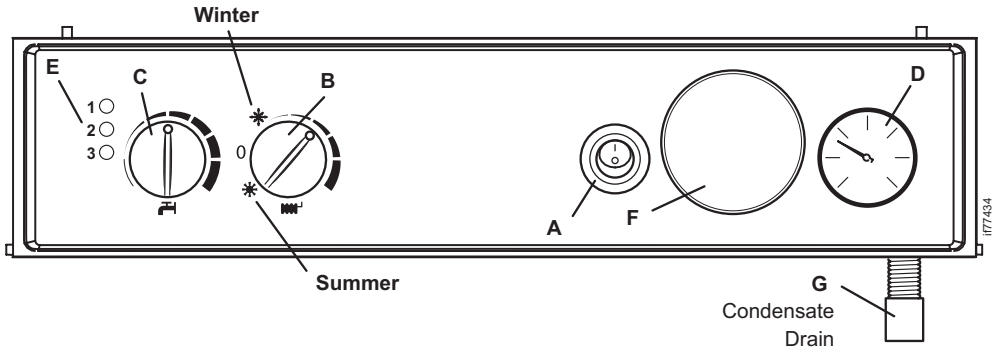

LEGEND

A. Boiler On/Off switch.
B. Main switch & CH thermostat knob.
C. DHW thermostat knob
D. Pressure gauge
E. Operational lights (1 & 3) / Fault indication light (2)
F. Optional programmer
G. Condensate drain
H. Automatic air vent
J. Burner pressure test point
K. CH max. pressure adjustment nut
L. DHW min. pressure adjustment screw
M. Gas inlet pressure test point
N. CH return isolating valve
P. DHW inlet isolating valve
R. Gas service cock
S. DHW flow
T. CH flow isolating valve
U. Gas valve electrical connectors

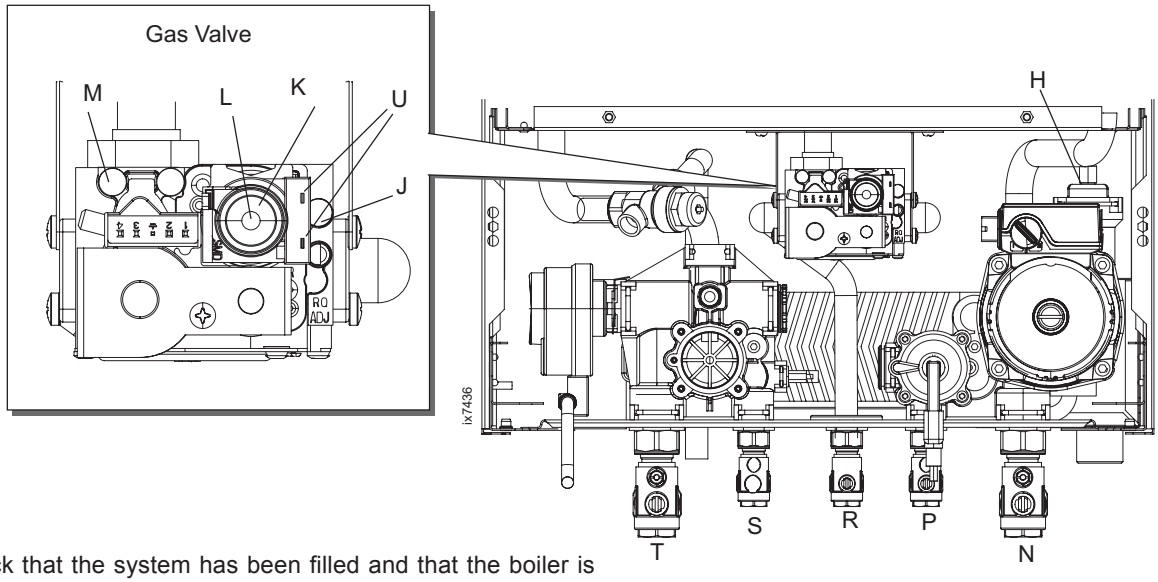

1. Check that the system has been filled and that the boiler is not airlocked. Ensure the automatic air vent cap (H) is open.

Note.
It is important the burner is not operated before the system is fully vented of air. If it is necessary to operate the appliance pump to assist venting of the air this must be done with the gas service cock turned off.

2. Refit the boiler RHS panel. Refer to Frame 45.
3. Replace control panel and secure with fixing screws.
4. Check that all the drain cocks are closed and that the CH and DHW isolating valves (T, P and N) are OPEN.
5. Check that the electrical supply is OFF.
6. Check that the boiler on/off switch (A) is off.
7. Check that the gas service cock (R) is OPEN.
8. Slacken the screw in the inlet pressure test point (M) and connect a gas pressure gauge via a flexible tube.
9. Slacken the screw in the burner pressure test point (J) and connect a gas pressure gauge via a flexible tube.
10. Switch the electricity supply ON and check all external controls are calling for heat.
11. **CENTRAL HEATING**
    Set the main switch and CH thermostat knob (B) to position shown in diagram and switch the boiler on/off switch (A) to ON. The boiler control should now go through its ignition sequence until the burner is established. Green operational light 1 (E) will be illuminated when burner is lit.
12. If the boiler fails to light up to five times during the ignition sequence, the boiler will go to lockout and red operational light 2 (E) will be illuminated. To reset the ignition sequence turn the main switch (B) to '0' wait until the boiler reaches standby state, indicated by no fan or pump running (this can take up to 10 minutes in an overheat condition). Turn the main switch (B) to the winter setting, wait for 2 seconds then set the main switch (B) back to the desired position.

continued.....

40 INITIAL LIGHTING . . . . . CONTINUED

13. DOMESTIC HOT WATER

With the boiler firing, set the DHW thermostat knob (C) to maximum and fully open a DHW tap. The boiler should continue to run and provide hot water at the open tap. Green operational lights 1 and 3 (E) will be illuminated when burner is lit.

14. Turn off the tap.

15. Test for gas soundness around ALL boiler gas components using leak detection fluid.

16. Operate for 10 minutes to stabilise the burner temperature.

17. The boiler is preset at the factory to its maximum output. Check the burner pressures against the values quoted in Table 2 (page 4) by using the following procedure.

i. Remove plastic protective cap from the mechanical pressure adjustment components (L&K).

ii. Start the boiler at its maximum power. Operate the boiler in DHW mode or ensure that the boiler is not range rated if the test is carried out in CH mode.

Maximum valve setting - CH & DHW

Note.

The minimum CH pressure is automatically set electronically.

iii. If necessary, rotate the **maximum** gas pressure brass hexagon nut adjustment (K) using a spanner until you obtain the required pressure as indicated on Table 2 (page 4) (burner pressure). By rotating clockwise the pressure increases.

Minimum valve setting - DHW Only

iv. Disconnect one of the two connectors (U).

v. If necessary, rotate the **minimum** gas pressure adjustment (red cross point screw) (L) until you obtain the required pressure as indicated on Table 3 (page 4) (burner pressure). By rotating clockwise the pressure increases.

vi. Turn the boiler off and re-connect the wire to the modulating operator (U).

vii. Start the boiler and check again the maximum gas pressure setting.

viii. Turn the boiler off and disconnect the inlet and burner pressure gauges and close the gas valve inlet and outlet pressure test points (J & M).

IMPORTANT.

After the gas pressure checks and any adjustment operations, all of the test points must be sealed and leak tested.

18. Refit the front panel and bottom panel.

41 GENERAL CHECKS

Make the following checks for correct operation:

1. Hot water

a. Fully open all DHW taps in turn and ensure that water flows freely from them.

b. Close all taps except the furthest one from the boiler and check that the boiler is firing at maximum rate.

c. Ensure that DHW temperature rise of approximately 40°C is obtained at the tap. This corresponds to a flow rate of approximately:

8.4 (1.8) l/min (gpm) **excel HE C24**
10 (2.2) l/min (gpm) **excel HE C28**
11.5 (2.6) l/min (gpm) **excel HE C32**

Note. *Quoted flow rates and temperature rises are those theoretically achievable. Flow rates measured during commissioning may differ (due, for example, to resistance of domestic hot water pipe lengths and fittings or available dynamic gas pressures).*

If necessary reduce the flow rate using isolation valve 'S'. Refer to Frame 39.

d. Turn off the DHW tap.

2. Central heating

Operate each control separately and check that the main burner or circulating pump, as the case may be, responds.

3. Gas rate

Check the boiler gas rate when the boiler is at full output. The gas rate will normally be

45.8 (1.62) litres/min (ft^3/min) for the model **excel HE C24**

53.5 (1.89) litres/min (ft^3/min) for the model **excel HE C28**

62.1 (2.19) litres/min (ft^3/min) for the model **excel HE C32**

checked at the gas meter, with no other appliance in use.

If this check is not possible, ensure that the burner pressure is:

13.4 (5.3) mbar (in. w.g.) for the model **excel HE C24**

10.5 (4.2) mbar (in. w.g.) for the model **excel HE C28**

12.9 (5.2) mbar (in. w.g.) for the model **excel HE C32**

In addition ensure the dynamic inlet pressure is 20mb.

4. Water circulation system. Refer to frame 6.

Note. *A suitable flushing solution should be used during the flushing procedure.*

a. With the system HOT examine all water connections for soundness.

b. With the system still HOT, turn off the gas, water and electricity supplies to the boiler and drain down, to complete the flushing process.

c. Refill the system, adding inhibitor (see 'Water Treatment'), if required. Refer to Frame 10

d. Balance the system. It is suggested that, initially, all radiator handwheel valves (or TRVs if fitted) be set fully open, that all lockshield valves be set a half-turn open.

Make minor adjustments to each radiator to achieve the same differential on all.

Finally, set the system controls to the users requirements.

If an optional programmer kit is fitted refer to the instructions supplied.

42 HANDING OVER

After completing the installation and commissioning of the system the installer should hand over to the householder by the following actions:

1. Hand the User Instructions to the householder and explain his/her responsibilities under the relevant national regulations.
2. Explain and demonstrate the lighting and shutting down procedures.
3. The operation of the boiler and the use and adjustment of all system controls should be fully explained to the householder, to ensure the greatest possible fuel economy consistent with the household requirements of both heating and hot water consumption.

   Advise the User of the precautions necessary to prevent damage to the system and to the building, in the event of the system remaining inoperative during frosty conditions.
4. Explain the function and the use of the boiler heating and domestic hot water controls.

   Explain that due to system variations and seasonal temperature fluctuations DHW flow rates/temperature rise will vary, requiring adjustment at the draw off tap. It is therefore necessary to draw the users attention to the section in the Users Instructions titled "Control of Water Temperature" and the following statement:

   "Additionally, the temperature can be controlled by the user via the draw-off tap: the lower the rate the higher the temperature, and vice versa".
5. Explain the function of the boiler fault mode.

   Emphasise that if a fault is indicated, the boiler should be turned off and a CORGI registered local heating installer consulted. In IE contact a competent person.
6. Explain and demonstrate the function of time and temperature controls, radiator valves etc., for the economic use of the system.
7. If a programmer is fitted draw attention to the Programmer Users Instructions and hand them to the householder.
8. **Loss of system water pressure**

   Explain that the dial on the boiler control panel indicates the central heating system pressure and that if the normal COLD pressure of the system is seen to decrease over a period of time then a water leak is indicated. In this event a registered local heating installer should be consulted.

WARNING.

Do not fire the boiler if the pressure has reduced to zero from the original setting.

9. **After installation and commissioning please complete the benchmark commissioning Checklist before handover to the customer. For IE it is necessary to complete a "Declaration of Conformity" to indicate compliance to I.S. 813:2002**
10. **IMPORTANT**

    A comprehensive service should be carried out ANNUALLY.

    Stress the importance of regular servicing by a CORGI registered installer. In IE servicing work must be carried out by a competent person.
11. As the installer you may wish to undertake the service contract yourself or alternatively offer to the customer the benefits of the Ideal Care Scheme, details of which are outlined in the householder pack supplied with this boiler.

43 SERVICING SCHEDULE

To ensure the continued safe and efficient operation of the appliance it is recommended that it is checked at regular intervals and serviced as necessary. The frequency of servicing will depend upon the installation condition and usage but should be carried out at least annually.

It is the law that any service work must be carried out by a CORGI registered installer. In IE service work must be carried out by a competent person.

1. Light the boiler and carry out a pre-service check, noting any operational faults.
2. Check the gas consumption.
3. Connect a suitable gas analyser to the sampling point on the top of the boiler or into the flue terminal if access is possible (optional test).
   For correct boiler operation, the CO/CO_2 content of the flue gas should not be greater than 0.004 ratio.
   If this is the case, and the gas input is at least 90% of the nominal, then no further action need be taken. If not, proceed to Step 5.
4. Clean the main burner.
5. Clean the heat exchanger.
6. Check the condition of the combustion chamber insulation. Any cracked or damaged pieces should be replaced.
7. Check the main injectors for blockage or damage.
8. Check that the flue terminal is unobstructed and that the flue system is sealed correctly.

The servicing procedures are covered more fully in Frames 40 and 41 and MUST be carried out in sequence.

Note. *In order to carry out either servicing or replacement of components the boiler front panel and sealing panel must be removed. Refer to Frames 44 and 45.*

WARNING. **Always turn OFF the gas supply at the gas service cock, and switch OFF and disconnect the electricity supply to the appliance before servicing.**

IMPORTANT.

9. After completing the servicing or exchange of components always test for gas soundness and carry out functional checks in 3 and 4 above.
10. When work is complete the sealing panel MUST be correctly refitted, ensuring that a good seal is made.

Do NOT OPERATE the boiler if the sealing panel is not fitted.

12. Complete the service section of the Benchmark Commissioning Checklist.

44 BOILER FRONT PANEL REMOVAL

1. Remove the 2 fixing screws from the top of the front panel.
2. Lift the front panel upwards and forward at the bottom to remove.

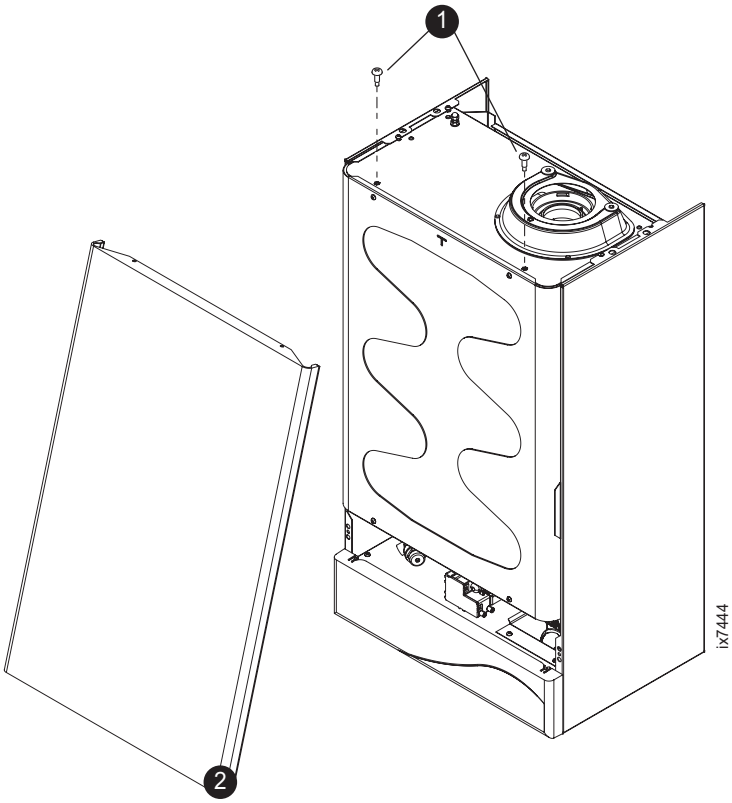

45 BOILER SIDE PANEL AND SEALING PANEL REMOVAL

1. Slacken the 2 top and 2 bottom fixing screws from the LH and RH side panels and remove the panels.
2. To remove the sealing panel remove the 4 fixing screws from the front.
3. Remove the sealing panel by pulling forward to disengage rear clips.
4. Remove the fixing screws retaining the inner sealing panel and remove the panel taking care not to damage the front insulation panel.

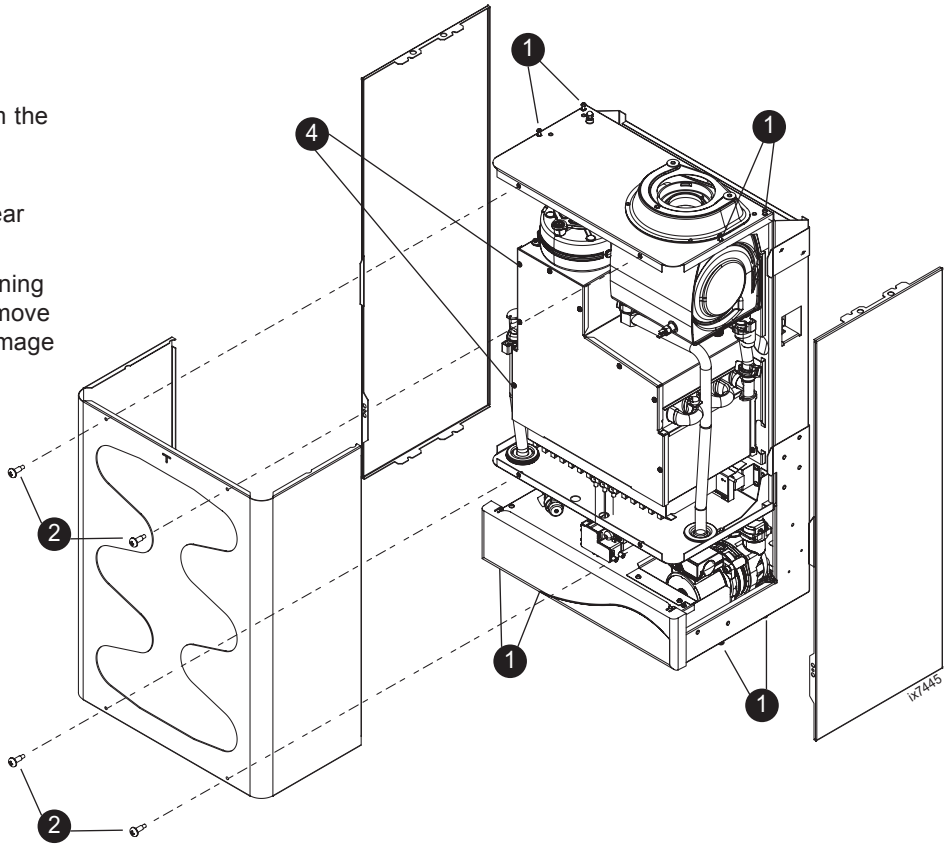

46 THE CONTROL BOX IN THE SERVICING POSITION

1. Remove the screws and the cover panel.
2. Remove the control box fixing screws.
3. Pull the control panel forward.
4. Remove the control box lid fixing screws and remove lid.

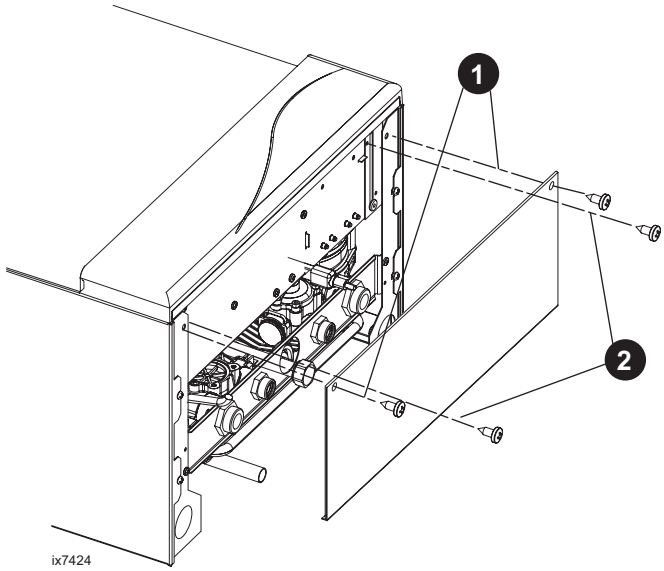

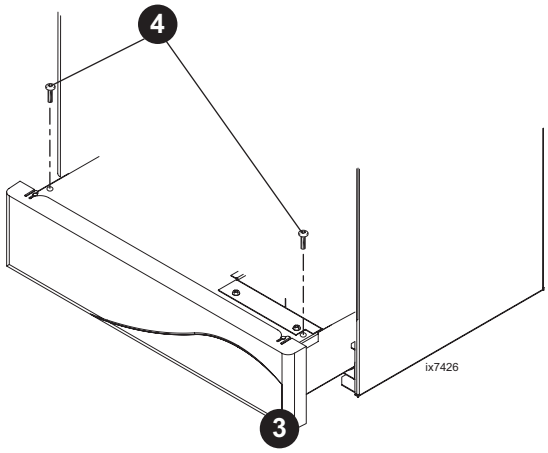

47 FAN AND VENTURI REMOVAL AND CLEANING

1. Remove the screw on the fan mounting bracket.
2. Carefully pull fan from the recuperator sealing gasket. Check the gasket for damage and replace if necessary.
3. Disconnect the electrical leads from the fan.
4. Disconnect APS sensing tube.
5. Inspect venturi and fan and clean as necessary.
6. Reassemble in reverse order.

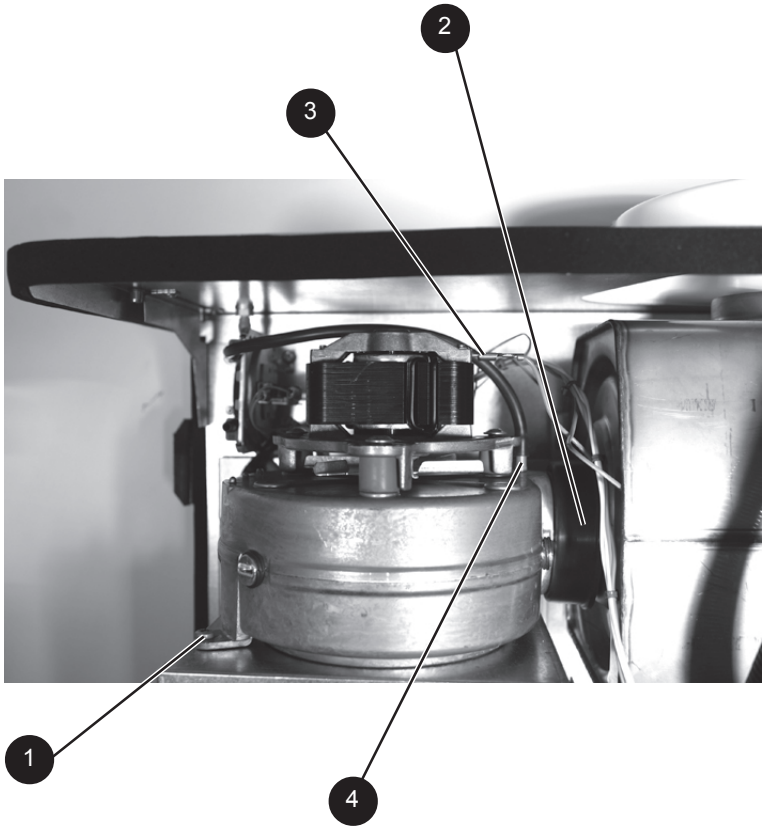

48 BURNER REMOVAL AND CLEANING

1. Carefully separate the detection lead in-line connector.
2. Carefully pull off the two ignition leads from the side of the PCB ignition unit.
3. Carefully pull the 3 leads through the rubber sealing grommets.
4. Remove the earth lead and 4 burner fixing screws and carefully withdraw the burner unit.
5. Inspect the burner and clean as necessary.

   Note. *Brushes with metallic bristles should not be used.*
6. Inspect all injectors for blockage or damage if necessary.
7. Inspect the three electrodes/leads for damage and check the spark gap is 3-5mm between the pair of ignition electrodes (centre and RH side).

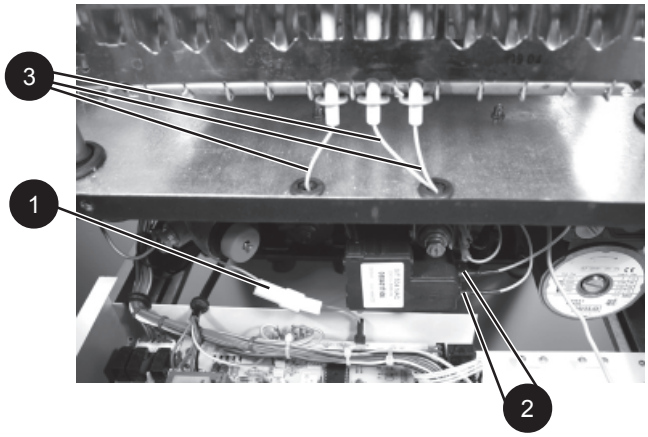

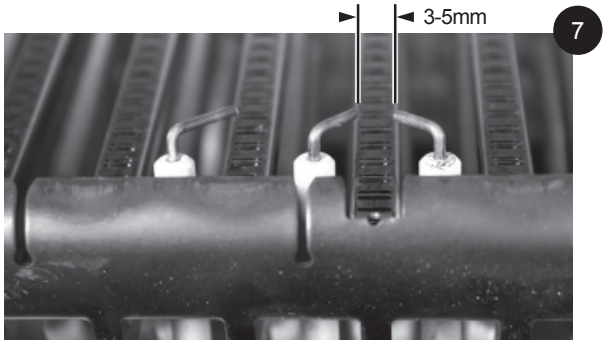

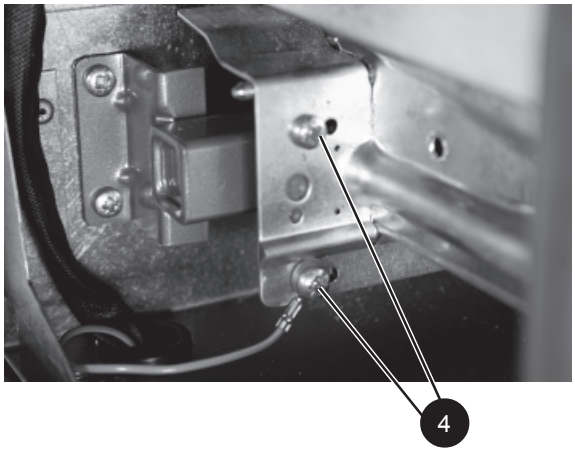

49 CLEANING THE HEAT EXCHANGER

1. Using a suitable tool as supplied in the standard British Gas Flue brush kit, clean between the heat exchanger fins.
2. Access to the base of the combustion chamber is now possible. Brush clean any deposits from the base of the combustion chamber and remove any loose deposits.
3. Check the condition of the combustion chamber insulation. Any cracked or damaged pieces should be replaced.

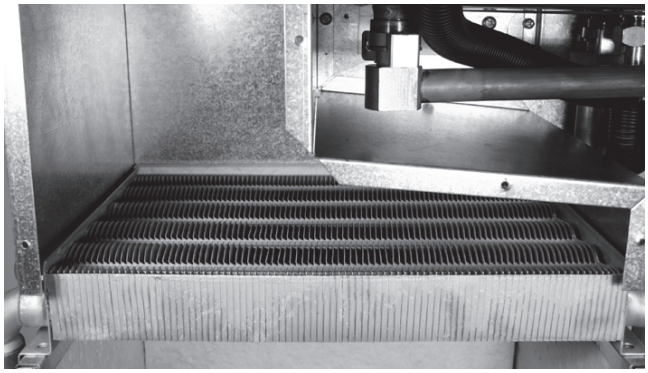

50 RE-ASSEMBLY

1. Refit the burner assembly and earth tab.
2. Reconnect ignition and detection leads.
3. Reconnect the fan electrical leads.
4. Refit the fan / venturi assembly.
5. Refit the boiler sealing panel.

IMPORTANT
Ensure that the boiler sealing panel is correctly fitted and that a good seal is made.

6. Refit the control box cover.
7. Push the control box back into its working position and secure.
8. Refit the boiler front and bottom panels.
9. Turn on the gas supply at the gas service cock.
10. Reconnect the electrical supply.

51 REPLACEMENT OF COMPONENTS

GENERAL

When replacing ANY component

1. Isolate the electricity supply.
2. Turn off the gas supply.
3. Remove the boiler front panel. Refer to Frame 38.

After replacing ANY component check operation of the boiler, including gas soundness, gas rate and combustion test.

IMPORTANT.
When work is complete, the sealing panel, if removed, must be correctly refitted - ensuring that a good seal is made.

Notes.

1. *In order to assist fault finding, the control panel has an LED diagnostic display. The key to boiler fault conditions is shown in Frame 79.*
2. *In order to replace components in Frames 68-78 it is necessary to drain the boiler. Refer to Frame 67.*

THE BOILER MUST NOT BE OPERATED WITHOUT THE SEALING PANEL FITTED

52 CONDENSATE BLOCKAGE THERMISTOR REPLACEMENT

1. Refer to Frame 51.
2. Remove the boiler front, side and sealing panels. Refer to Frame 44 and 45.
3. Carefully pull off the green electrical connection.
4. Unscrew the condensate blockage thermistor.
5. Fit new condensate blockage thermistor complete with new washer.
6. Re-assemble in reverse order.
7. Check the operation of the boiler. Refer to Frame 50 and 51.

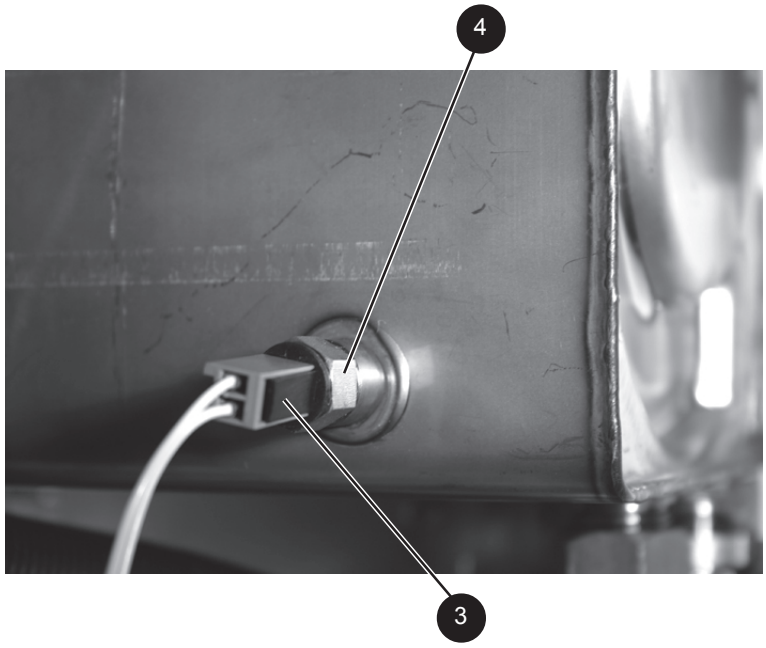

53 FAN AND FAN SUPPRESSOR REPLACEMENT

FAN

1. Refer to Frame 51.
2. Remove the boiler front, side and sealing panels. Refer to Frame 44 and 45.
3. Remove the fan mounting fixing screw.
4. Pull fan from the recuperator sealing gasket.
5. Disconnect electrical leads from the fan.
6. Pull plastic sensing pipe from venturi connection.
7. Reconnect the fan electrical connections and fit the new fan in reverse order ensuring the plastic venturi pipe is replaced.
8. Re-assemble the boiler in reverse order.
9. Check the operation of the boiler. Refer to Frame 50 and 51.

Fan Suppressor

1. As 1-5 above.
2. Pull off fan suppressor.

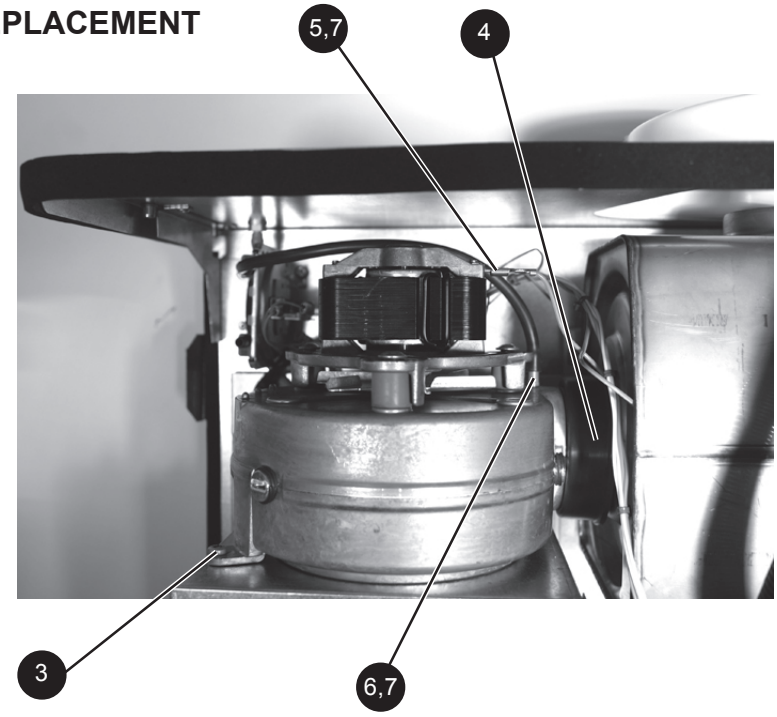

54 BURNER INJECTOR REPLACEMENT

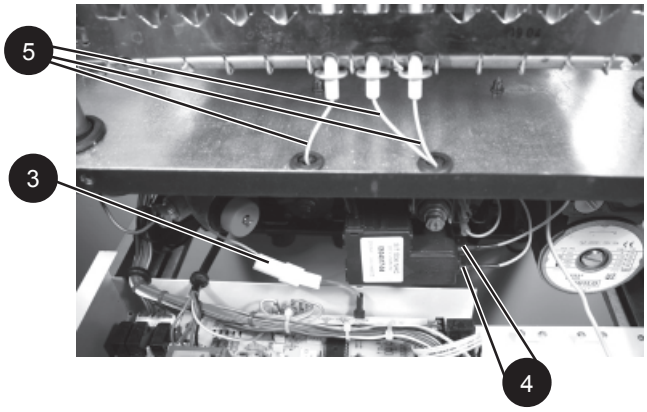

1. Refer to Frame 51.
2. Remove the boiler front, side and sealing panels. Refer to Frames 44 and 45. Put the control box into the servicing position. Refer to Frame 46.
3. Carefully separate the in-line connector from the detection lead.
4. Carefully pull off the two ignition leads from the side of the ignition unit.
5. Carefully pull the three leads through the rubber sealing grommets.
6. Remove the earth lead and the four burner fixing screws and carefully withdraw the burner unit.
7. Unscrew each injector from the manifold.
8. Fit new injectors using new copper washers provided.
9. Re-assemble in reverse order.
10. Check the operation of the boiler. Refer to Frame 50 and 51.

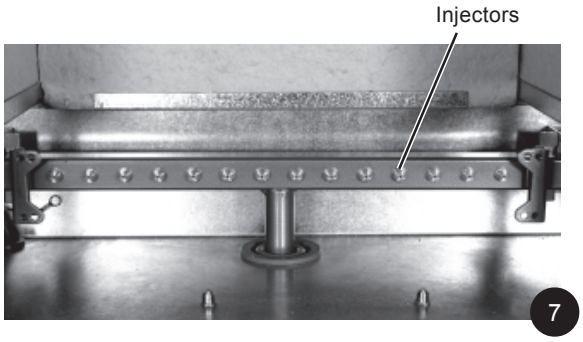

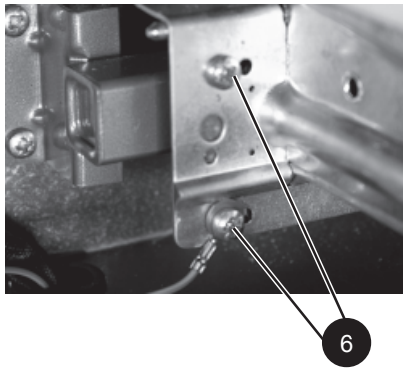

55 BURNER REPLACEMENT

1. Refer to Frame 51.
2. Remove the boiler front, side and sealing panels. Refer to Frames 44 and 45. Put the control box into the servicing position. Refer to Frame 46.
3. Carefully separate the in-line connector from the detection lead.
4. Carefully pull off the two ignition leads from the side of the ignition unit.
5. Carefully pull the three leads through the rubber sealing grommets.
6. Remove the earth lead and the four burner fixing screws and carefully withdraw the burner unit
7. Fit the new burner unit.
8. Re-assemble in reverse order.
9. Check the operation of the boiler. Refer to Frame 50 and 51.

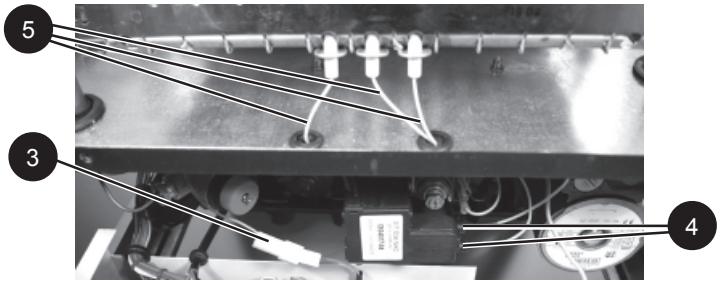

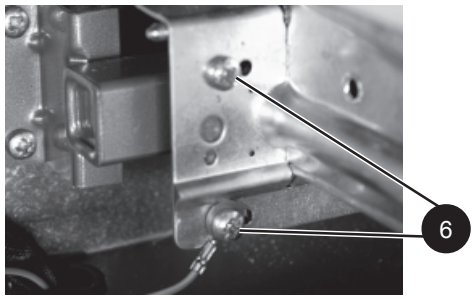

56 OVERHEAT THERMOSTAT REPLACEMENT

1. Refer to Frame 51.
2. Remove the boiler front, side and sealing panels. Refer to Frames 44 and 45.
3. Overheat Thermostat:
   - **a.** Carefully pull off the 2 electrical connections.
   - **b.** Unclip thermostat from pipe.
   - **c.** Fit 2 electrical connections onto new thermostat
   - **d.** Clip new thermostat onto pipe ensuring correct positioning on heat exchanger manifold and re-assemble in reverse order.
4. **UNDER NO CIRCUMSTANCES REFIT THE OVERHEAT THERMOSTAT ONTO THE COLD RECUPERATOR RETURN PIPE.**
5. Check the operation of the boiler. Refer to Frame 50 and 51.

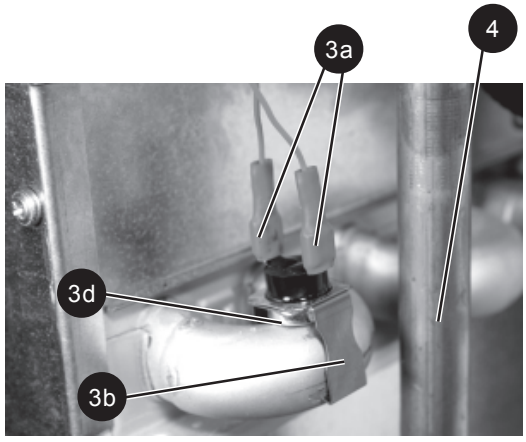

57 IGNITION ELECTRODE REPLACEMENT

1. Refer to Frame 51.
2. Remove the boiler front, side and sealing panels. Refer to Frames 44 and 45. Put the control box into the servicing position. Refer to Frame 46.
3. Carefully separate the in-line connector from the detection lead.
4. Carefully pull off the two ignition leads from the side of the ignition unit.
5. Carefully pull the three leads through the rubber sealing grommets.
6. Remove the earth lead and the four burner fixing screws and carefully withdraw the burner unit.
7. Remove the fixing screws from the centre and RH electrodes and carefully withdraw the two ignition electrodes.
8. Fit new ignition electrodes.
9. Re-assemble in reverse order.
10. Check the operation of the boiler. Refer to Frame 50 and 51.

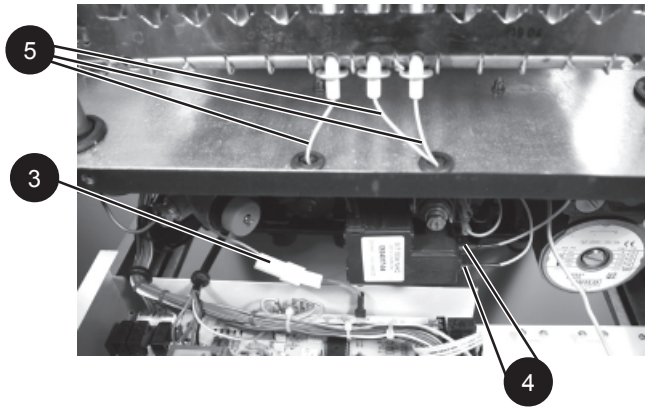

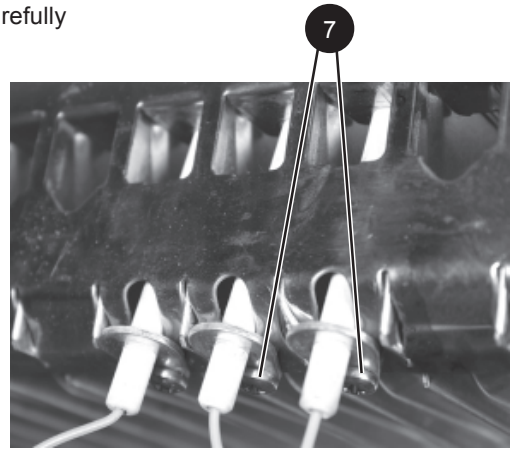

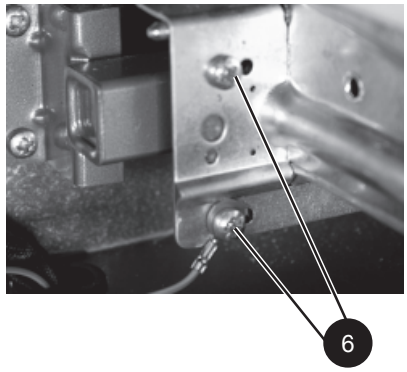

58 FLAME DETECTION ELECTRODE REPLACEMENT

1. Refer to Frame 51.
2. Remove the boiler front, side and sealing panels. Refer to Frames 44 and 45. Put the control box into the servicing position. Refer to Frame 46.
3. Carefully separate the in-line connector from the detection lead.
4. Carefully pull off the two ignition leads from the side of the ignition unit.
5. Carefully pull the three leads through the rubber sealing grommets.
6. Remove the earth lead and the four burner fixing screws and carefully withdraw the burner unit.
7. Remove the fixing screw from the LH electrode and carefully withdraw the detection electrode.
8. Fit new detection electrode.
9. Re-assemble in reverse order.
10. Check the operation of the boiler. Refer to Frame 50 and 51.

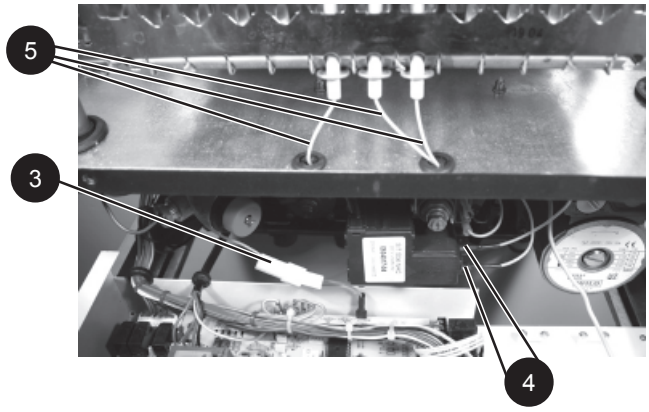

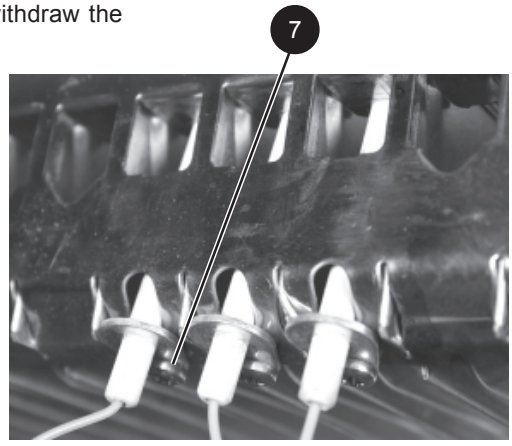

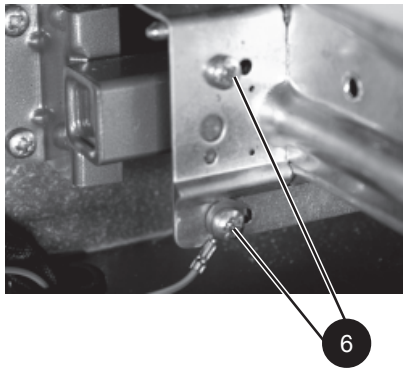

59 SPARK GENERATOR REPLACEMENT

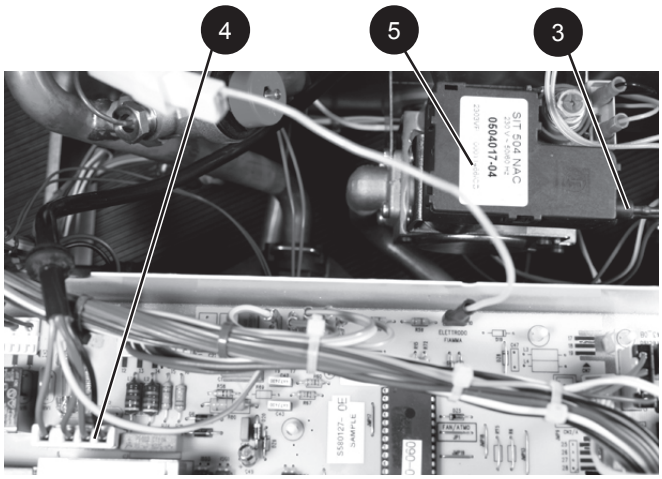

1. Refer to Frame 51.
2. Remove the boiler front and side panels. Refer to Frame 44 and 45 and put the control box into the servicing position. Refer to Frame 46.
3. Carefully pull off the two ignition leads from the side of the ignition unit.
4. Remove the electrical plug from the printed circuit board.
5. Carefully pull the spark generator forward to disengage the 4 pin connection at the top of the gas control.
6. Fit the new spark generator and re-assemble in reverse order.
7. Check the operation of the boiler. Refer to Frame 50 and 51.

60 GAS CONTROL VALVE REPLACEMENT

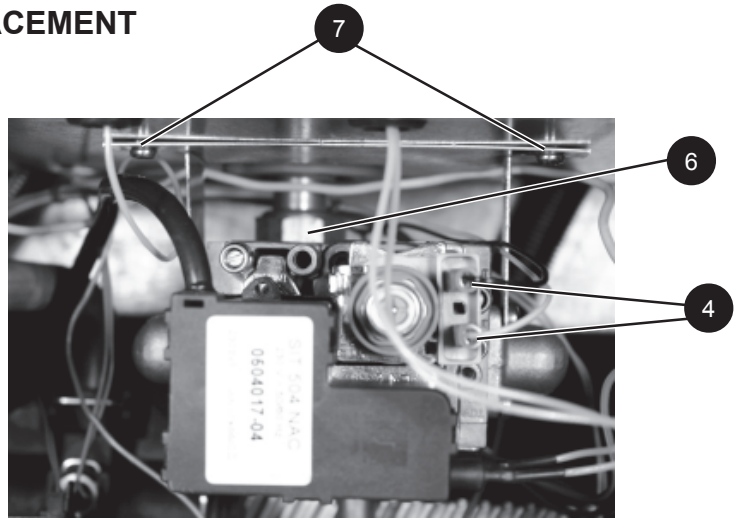

1. Refer to Frame 51.
2. Remove the boiler front and side panels. Refer to Frame 44 and 45 and put the control box into the servicing position. Refer to Frame 46.
3. Remove the spark generator. See Frame 59.
4. Pull the two electrical connections from the gas control valve.
5. Undo the gas inlet pipe union at the gas service cock.
6. Undo the union nut on the outlet of the gas control valve.
7. Remove the 2 gas control valve bracket fixing screws.
8. Withdraw the valve complete with bracket, inlet and outlet pipes.
9. Transfer the bracket, inlet pipe and outlet pipe to the new gas control valve.
10. Fit the new gas control valve , taking care not to trap wiring harness between bracket and chassis, ensuring that any seals showing signs of damage or deterioration are replaced.
11. Re-fit spark generator and fully re-assemble in reverse order.
12. Check the operation of the boiler , refer to Frame 50 and 51, ensuring the gas pressure is correctly set. See Frame 39 and 40

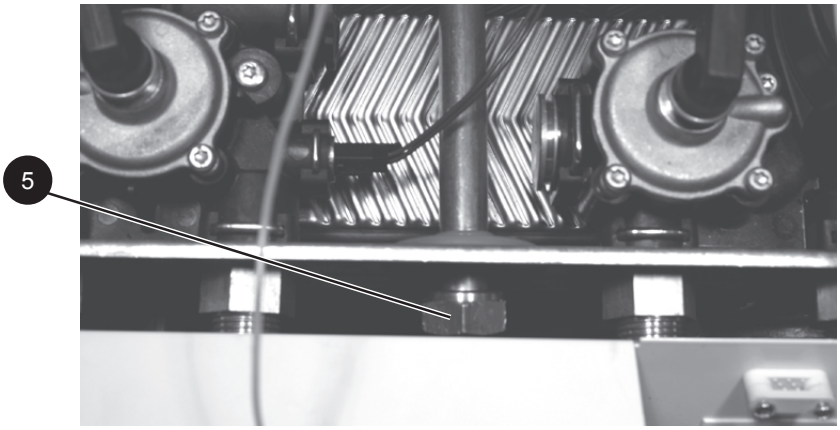

61 DIVERTER VALVE ACTUATOR REPLACEMENT

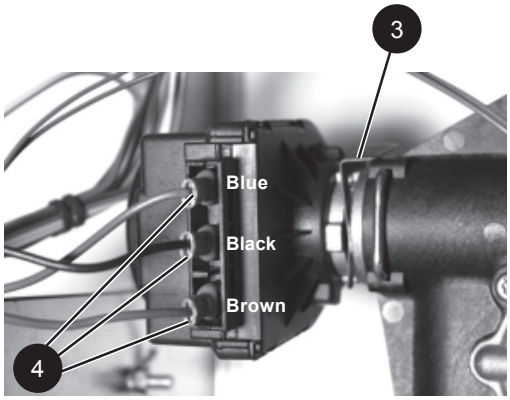

1. Refer to Frame 51.
2. Remove the boiler front and side panels. Refer to Frame 44 and 45 and put the control box into the servicing position. Refer to Frame 46.
3. Loosen retention clip with screw driver and pull the clip from the diverter valve.
4. Remove the three electrical connections noting their position.
5. Carefully remove the actuator.
6. Fit new actuator and re-assemble in reverse order ensuring the 3 wires are correctly replaced as shown.
7. Check the operation of the boiler. Refer to Frame 50 and 51.

62 COMBUSTION CHAMBER INSULATION REPLACEMENT

1. Refer to Frame 51.
2. Remove burner assembly. Refer to Frame 55.
3. Remove the two screws retaining both left and right hand combustion chamber side panels.
4. Slide the combustion chamber side panel insulation from its retention and fit new insulation panels.
5. Lift rear insulation panel from its retention and replace with new panel.
6. Remove the front panel insulation (straighten 2 top retaining clips and lift from bottom retention return) and replace with new panel.
7. Reassemble in reverse order.
8. Check the operation of the boiler. Refer to Frame 50 and 51.

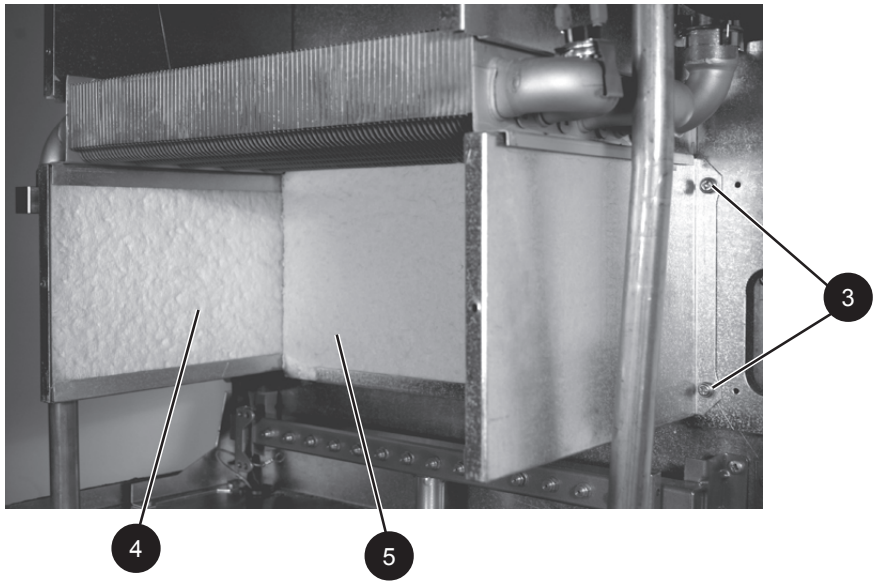

63 PCB REPLACEMENT (MAIN PCB AND EXPANSION PCB)

1. Refer to Frame 51.
2. Remove the boiler front, side and sealing panels. Refer to frame 44 and 45. Put the control box into the servicing position. Refer to Frame 46.
3. Carefully remove all push on connectors and earth connections (main PCB only) from the printed circuit board.
4. Remove the PCB from the five plastic supports (main PCB) or two plastic supports (expansion PCB).
5. Fit new PCB and refit all push on connectors and earth connections.
6. Reassemble in reverse order.
7. Check the operation of the boiler. Refer to Frame 56 and 51.

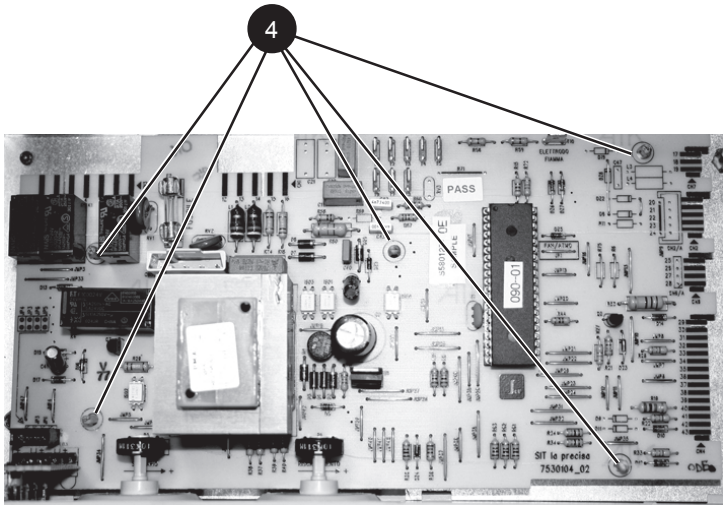

64 MAINS SWITCH REPLACEMENT

1. Refer to Frame 51.
2. Remove the boiler front, side and sealing panels. Refer to Frame 44 and 45. Put the control box into the servicing position. Refer to Frame 46.
3. Remove the two electrical connections from the mains switch.
4. Depress the plastic side retention clips and remove the mains switch from the front of the control box.
5. Fit new mains switch and replace electrical connections.
6. Check the operation of the boiler. Refer to Frame 50 and 51.

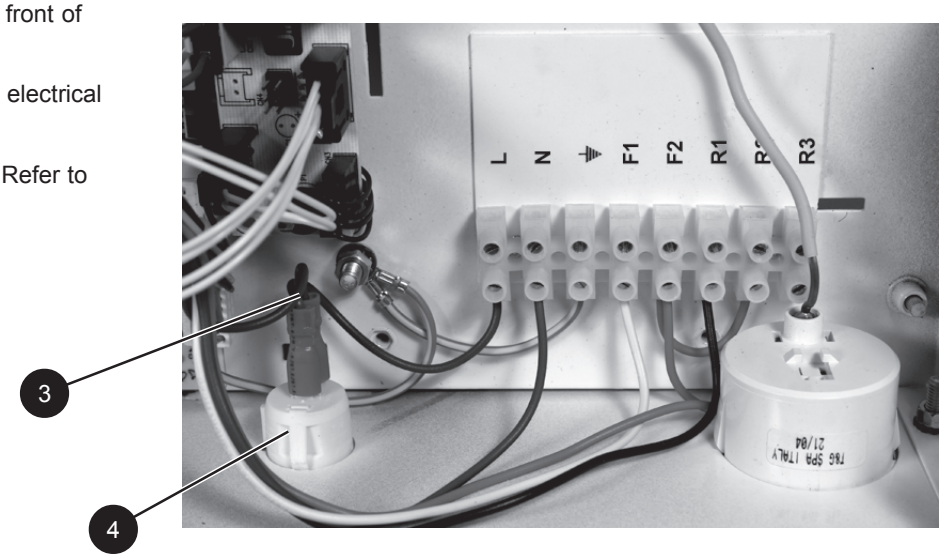

65 CH AND DHW MICROSWITCH REPLACEMENT

1. Refer to Frame 51.
2. Remove the boiler front, side and sealing panels. Refer to Frame 44 and 45. Put the control box into the servicing position. Refer to Frame 46.
3. Pull microswitch forward to disconnect from diaphragm.
4. Lift plastic retention clip and remove electrical connection.
5. Fit electrical connection to new microswitch and refit to diaphragm.
6. Re-assemble in reverse order.
7. Check the operation of the boiler. Refer to Frame 50 and 51.

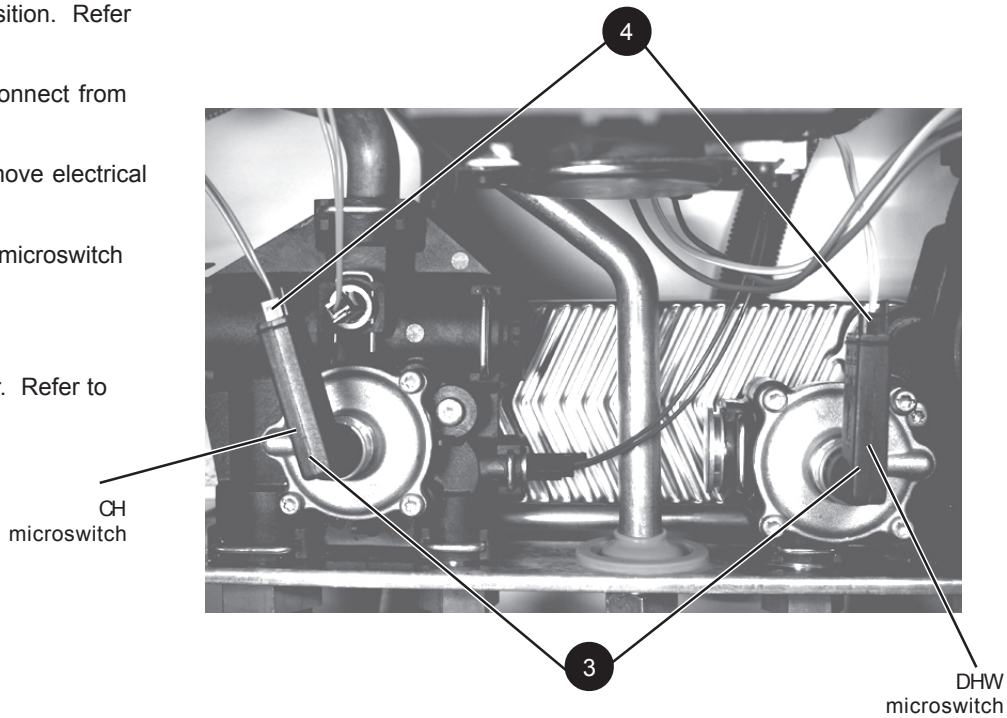

66 AIR PRESSURE SWITCH REPLACEMENT

1. Refer to Frame 51.
2. Remove the boiler front and left hand side panel. Refer to Frame 44 and 45.
3. Remove sensing pipe from air pressure switch.
4. Remove the two screws retaining the air pressure switch.
5. Remove electrical connections.
6. Fit new air pressure switch and refit electrical connections and sensing pipe.
7. Re-assemble in reverse order, ensuring the sensing pipe is replaced onto the top connection marked "L".
8. Check the operation of the boiler. Refer to Frame 50 and 51.

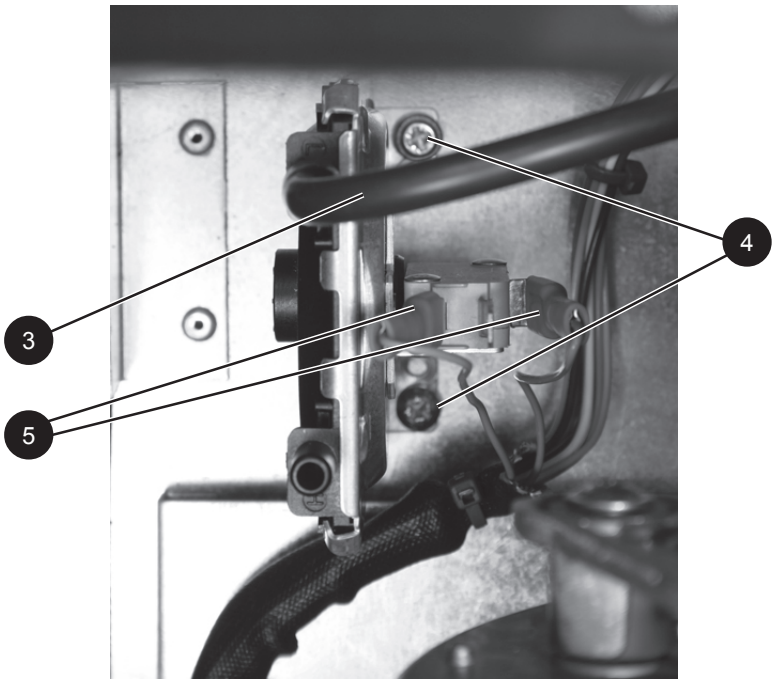

67 DRAINING THE BOILER

1. Refer to Frame 51.
2. Close all the water isolating valves (CH and DHW).
3. To drain the central heating circuit, attach a length of hose to the drain point and open the drain valve.

   Note. *Some residual water may be experienced during the replacement of components.*

4. As there is no direct drain for the domestic hot water circuit, depending on the location of the boiler, opening the lowest hot water tap may drain this circuit.

   Note. *Some residual water may be experienced during the replacement of components.*

5. **After replacing any component on the boiler, close the drain valve, remove the hose and open all system isolating valves (re-pressurise as appropriate) before proceeding to check operation of the boiler.**
6. Check the operation of the boiler. Refer to Frame 50 and 51.

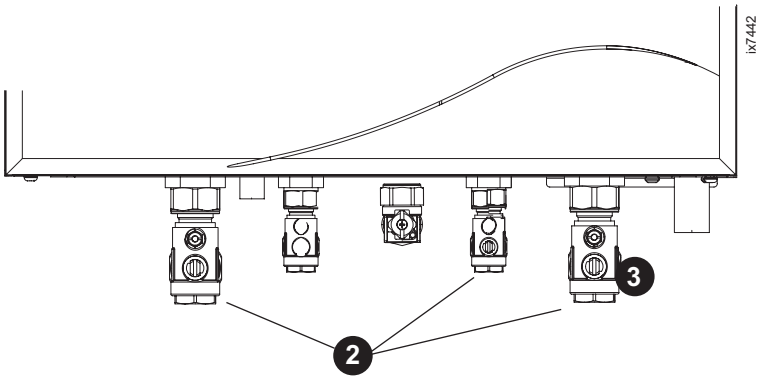

68 CH AND DHW DIAPHRAGM REPLACEMENT

1. Refer to Frame 51.
2. Remove the boiler front, side and sealing panels. Refer to Frame 44 and 45. Put the control box into the servicing position. Refer to Frame 46.
3. Drain the boiler water circuit. Refer to Frame 67.
4. Pull microswitch forward to disconnect from diaphragm.
5. Using a suitable tool, remove the four torx screws retaining the diaphragm.
6. Fit the new diaphragm and refit the microswitch.
7. Re-assemble in reverse order.
8. Check the operation of the boiler. Refer to Frame 50 and 51.

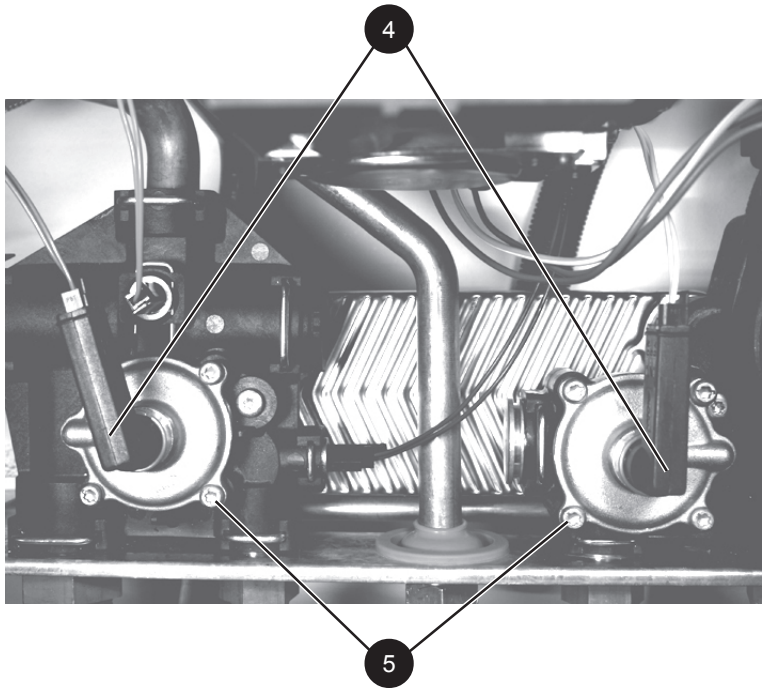

69 PRESSURE GAUGE REPLACEMENT

1. Refer to Frame 51.
2. Remove the boiler front, side and sealing panels. Refer to Frame 44 and 45. Put the control box into the servicing position. Refer to Frame 46.
3. Unscrew the pressure gauge sensing pipe retaining nut from the pressure relief valve.
4. Remove the pressure gauge head from the control panel front by depressing the plastic retention clips.
5. Fit the new pressure gauge and reconnect the sensing head to the pressure relief valve.
6. Re-assemble in reverse order.
7. Check the operation of the boiler. Refer to Frame 50 and 51.

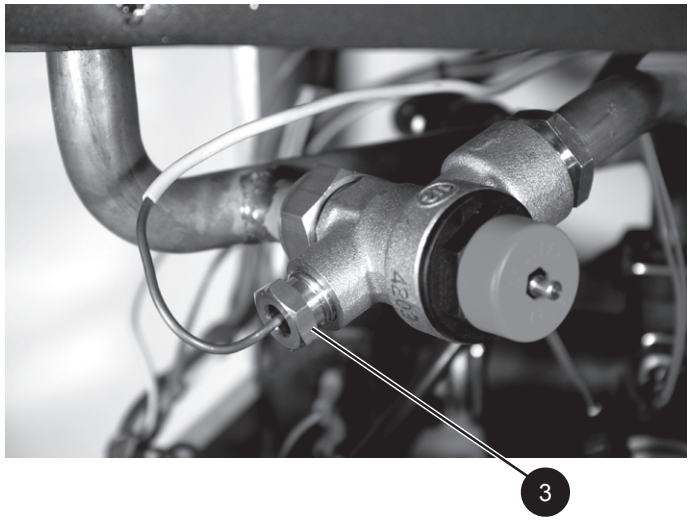

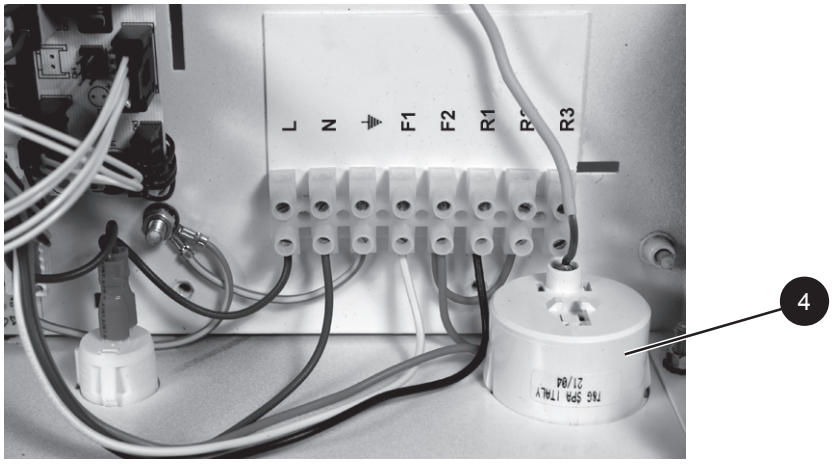

70 SAFETY RELIEF VALVE REPLACEMENT

1. Refer to Frame 51.
2. Remove the boiler front panel. Refer to Frame 44.
3. Drain the boiler water circuit. Refer to Frame 67.
4. Put the control box into the servicing position. Refer to Frame 46.
5. Remove the pressure gauge sensing head from the safety relief valve.
6. Undo the safety relief valve inlet and outlet union nut connections and remove safety relief valve.
7. Fit new safety relief valve and re-connect pressure gauge sensing head.
8. Re-assemble in reverse order.
9. Check the operation of the boiler. Refer to Frame 50 and 51.

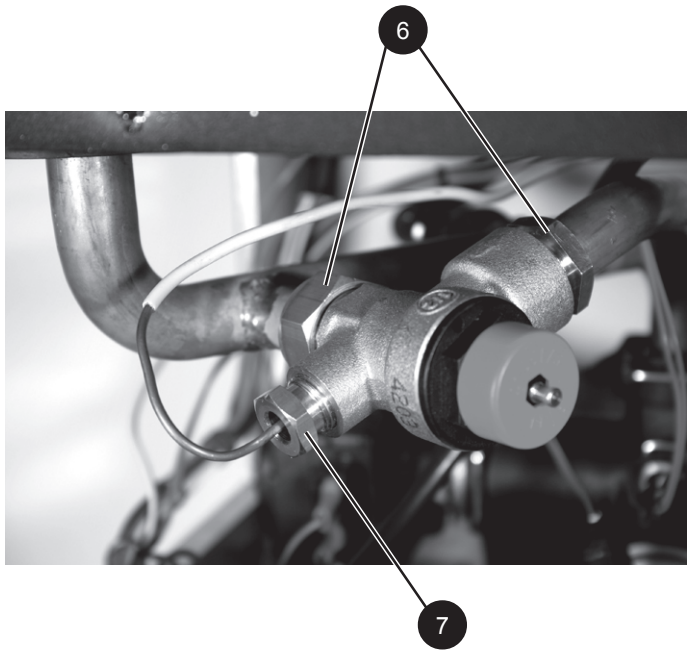

71 AUTOMATIC AIR VENT REPLACEMENT

1. Refer to Frame 51.
2. Remove the boiler front and right hand side panel. Refer to Frame 44 and 45.
3. Pull "U" shaped retaining clip forward.
4. Drain the boiler water circuit. Refer to Frame 67.
5. Remove automatic air vent valve.
6. Fit new automatic air vent valve.
7. Re-assemble in reverse order.
8. Check the operation of the boiler. Refer to Frame 50 and 51.

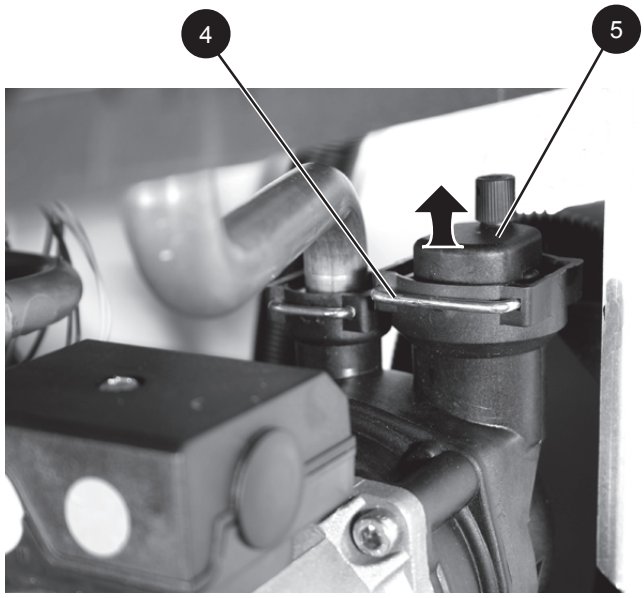

72 CH THERMISTOR AND DHW THERMISTOR

1. Refer to Frame 51.
2. Remove the boiler front, side and sealing panels. Refer to Frame 44 and 45. Put the control box into the servicing position. Refer to Frame 46.
3. Drain the boiler water circuits. Refer to Frame 67.
4. To remove the CH thermistor (red wires) pull out the "U" shaped retaining clip.
5. To remove the DHW thermistor (blue wires) pull out the "U" shaped retaining clip.
6. Fit new thermistor and retain with "U" shaped clip.
7. Re-assemble in reverse order.
8. Refill the boiler. Refer to Frame 32.
9. Check the operation of the boiler. Refer to Frame 50 and 51.

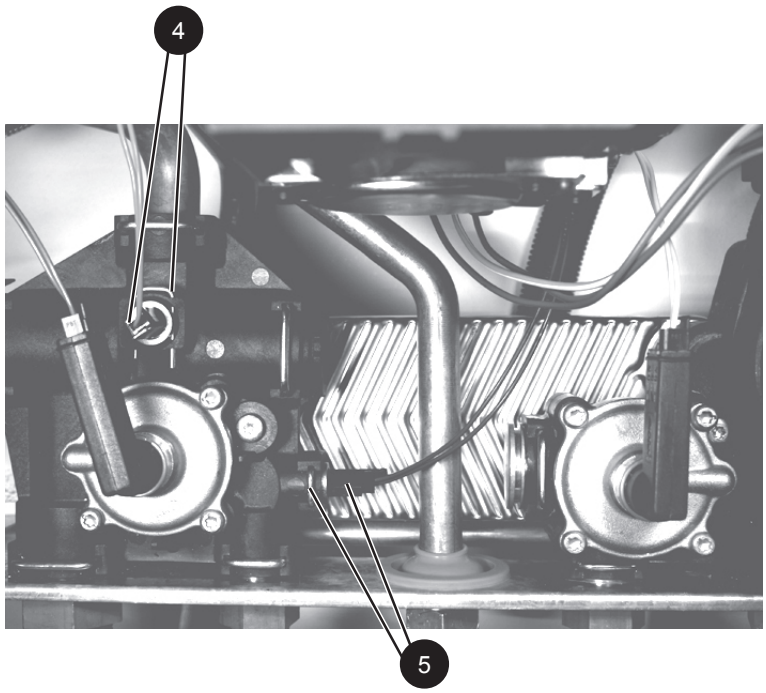

73 DIVERTER VALVE MECHANISM REPLACEMENT

1. Refer to Frame 51.
2. Remove the boiler front, side and sealing panels. Refer to Frame 44 and 45. Put the control box into the servicing position. Refer to Frame 46.
3. Drain the boiler water circuits. Refer to Frame 67.
4. To remove the diverter valve mechanism, pull out the "U" shaped retaining clip.
5. Fit new diverter valve mechanism and retain with "U" shaped clip.
6. Re-assemble in reverse order.
7. Refill the boiler. Refer to Frame 32.
8. Check the operation of the boiler. Refer to Frame 50 and 51.

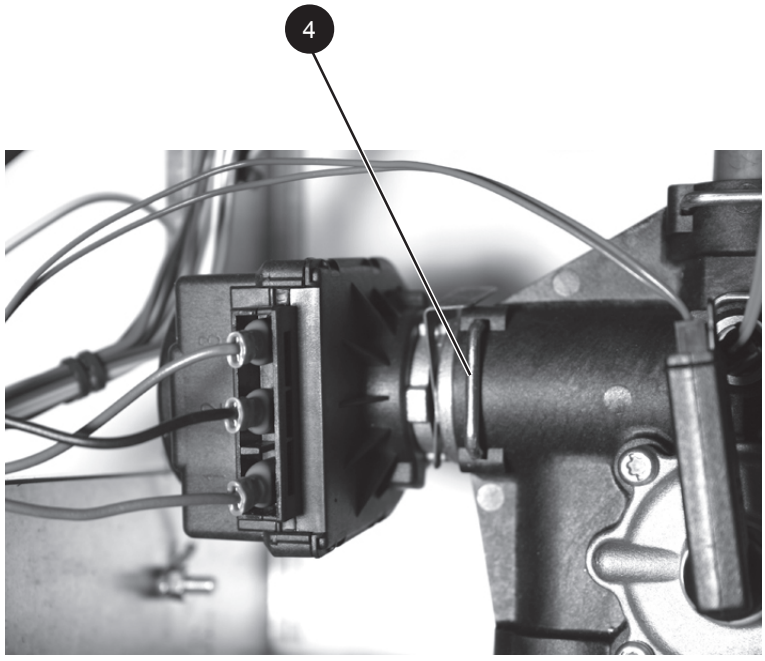

74 DHW PLATE HEAT EXCHANGER REPLACEMENT

1. Refer to Frame 51.
2. Remove the boiler front, side and sealing panels. Refer to Frame 44 and 45. Put the control box into the servicing position. Refer to Frame 46.
3. Drain the boiler water circuits. Refer to Frame 67.
4. Pull out the two "U" shaped clips retaining the copper bypass pipe and remove the pipe.
5. Unscrew the two allen screws retaining the DHW plate heat exchanger and remove the heat exchanger via the space vacated by the bypass pipe.
6. Fit the new plate heat exchanger being careful not to damage the 'O' rings and retain with the two allen screws.
7. Refit the bypass pipe and retain with two "U" shaped clips.
8. Re-assemble in reverse order.
9. Refill the boiler. Refer to Frame 32.
10. Check the operation of the boiler. Refer to Frame 50 and 51.

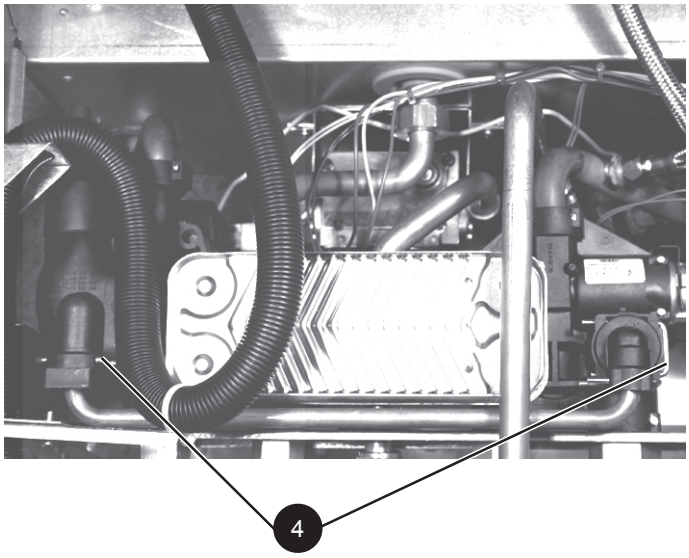

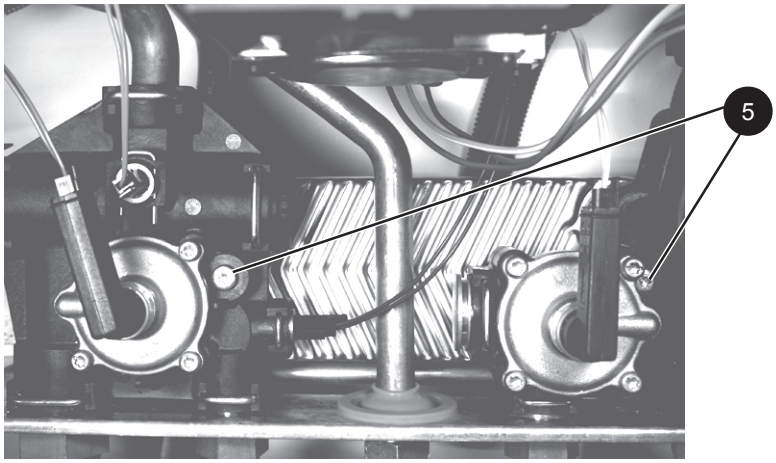

75 PUMP HEAD REPLACEMENT

1. Refer to Frame 51.
2. Remove the boiler front, side and sealing panels. Refer to Frame 44 and 45. Put the control box into the servicing position. Refer to Frame 46.
3. Drain the boiler water circuits. Refer to Frame 67.
4. Remove the pump electrical connection.
5. Remove the four allen screws retaining the pump head.
6. Remove the pump head.
7. Fit the new pump head.
8. Re-assemble in reverse order.
9. Refill the boiler. Refer to Frame 32.
10. Check the operation of the boiler. Refer to Frame 50 and 51.

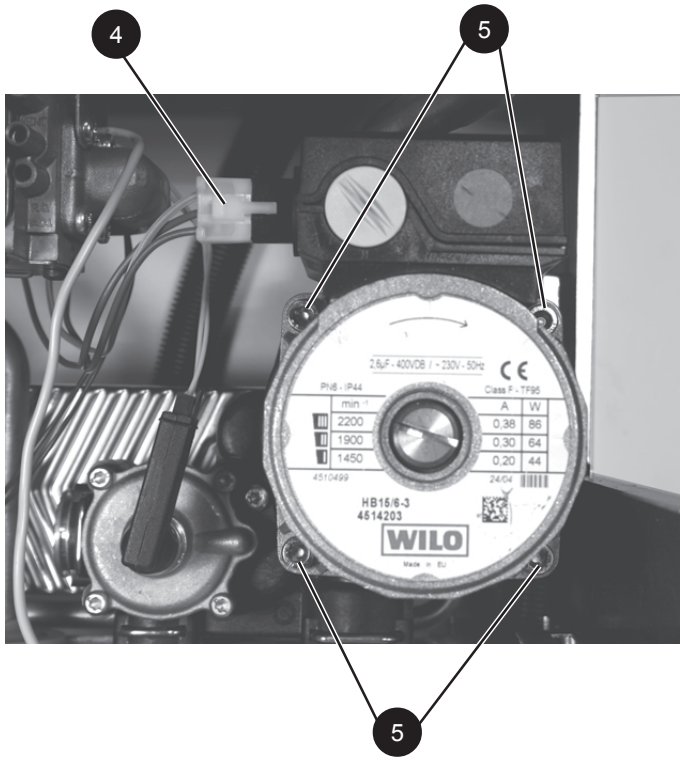

76 HEAT ENGINE REPLACEMENT

1. Refer to Frame 51.
2. Remove the boiler front, side and sealing panels. Refer to Frame 44 and 45.
3. Drain the boiler water circuits. Refer to Frame 67.
4. Remove the inner sealing panel.
5. Remove overheat thermostat clip from heat exchanger right hand side.
6. Pull off heat exchanger LH side retention clip and pull pipe downwards to disengage copper pipe 'O' ring seal.
7. Pull off recuperator LH side pipe connection retention clip and pull pipe downwards to disengage 'O' ring seal.
8. Disconnect recuperator plastic drain connection from recuperator RH side.
9. Unscrew the union connection on the recuperator RH side brass outlet connection and swivel the brass piece to clear the copper pipe.
10. The heat exchanger can now be pulled forward to remove (flex the collector hood sides to clear the heat exchanger and flex the pipe connections to facilitate removal).
11. Fit the new heat exchanger and re-connect all water pipe and drain connections.

    Note. *Ensure the recuperator RH side brass connection and its copper pipe are correctly aligned before tightening the union nut.*

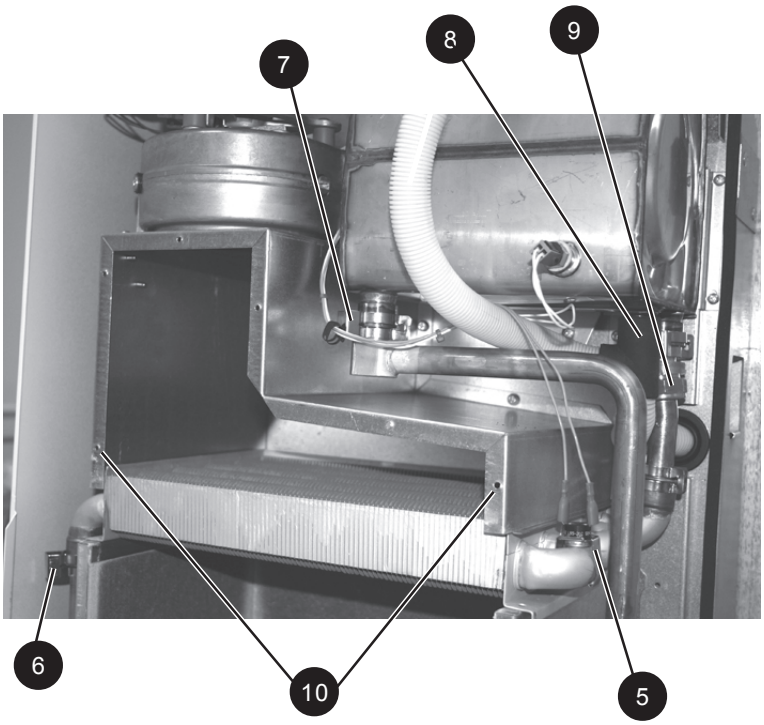

12. Re-connect the overheat thermostat clip to the heat exchanger pipe. **UNDER NO CIRCUMSTANCES REFIT THE OVERHEAT THERMOSTAT ONTO THE COLD RECUPERATOR RETURN PIPE.**
13. Re-assemble in reverse order.
14. Re-fill the boiler. Refer to Frame 32.
15. Check the operation of the boiler. Refer to Frame 50 and 51.

77 EXPANSION VESSEL REPLACEMENT

If the expansion vessel is faulty, there are two options:

A. If it has a punctured diaphragm but is otherwise leak free then it can be left in place and a new vessel added to the return side of the CH system, external to the boiler providing it is of adequate capacity and pre-charge pressure.

B. The boiler can be removed from the wall and the expansion vessel replaced:

1. Refer to Frame 51.
2. Drain the boiler water circuits. Refer to Frame 67.
3. Unscrew all of the gas water and condensate connection unions.
4. Remove the flue turret.
5. Remove the front and side panels. Refer to Frame 44 and 45.
6. Lift the complete boiler from the wall mounting plate and place on a flat surface, face down to expose the expansion vessel.
7. Unscrew the expansion vessel flexible hose from the copper pipe.
8. Remove the top support bracket.
9. Lift the expansion vessel from its side retaining brackets.

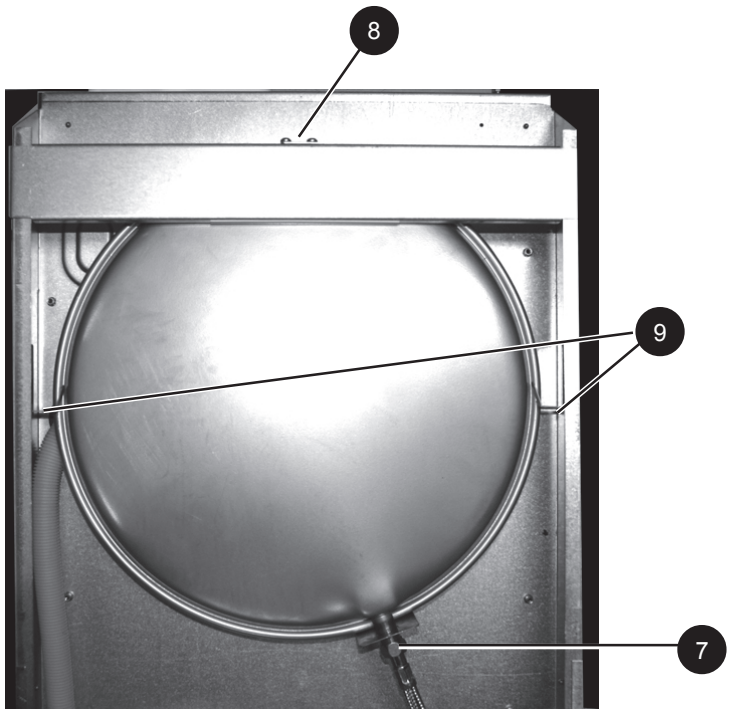

10. Fit the new expansion vessel.
11. Re hang boiler on wall bracket and reconnect all water, gas and flue connections.
12. Re-assemble in reverse order.
13. Refill the boiler. Refer to Frame 32.
14. Check the operation of the boiler. Refer to Frame 50 and 51.

78 RECUPERATOR REPLACEMENT

1. Refer to Frame 51.
2. Remove the boiler front, side and sealing panels. Refer to Frame 44 and 45.
3. Drain the boiler water circuits. Refer to Frame 67.
4. Pull off the electrical connection from the condensate blockage thermistor.
5. Unscrew the condensate blockage thermistor.
6. Pull off the recuperator LH side pipe retention clip and pull the pipe downwards to disengage 'O' ring seal.
7. Disconnect recuperator plastic drain connection from recuperator RH side.
8. Unscrew the union connection on the recuperator RH side brass outlet connection and swivel the brass piece to clear the copper pipe.
9. Remove the condensate drain point from the top of the recuperator.
10. Remove the fan. Refer to Frame 53.
11. Remove the single fixing screw from the bottom rear of the recuperator connecting the recuperator to the back panel.
12. Carefully pull the recuperator downwards to disengage the flue turret connection.
13. Fit the new recuperator and reconnect all flue, water pipe, condensate drain and thermostat connections with the new gaskets provided. Ensure the recuperator and fan are aligned correctly before tightening the recuperator fixing screw.
14. Re-assemble in reverse order.
15. Refill the boiler. Refer to Frame 32.
16. Check the operation of the boiler. Refer to Frame 50 and 51.

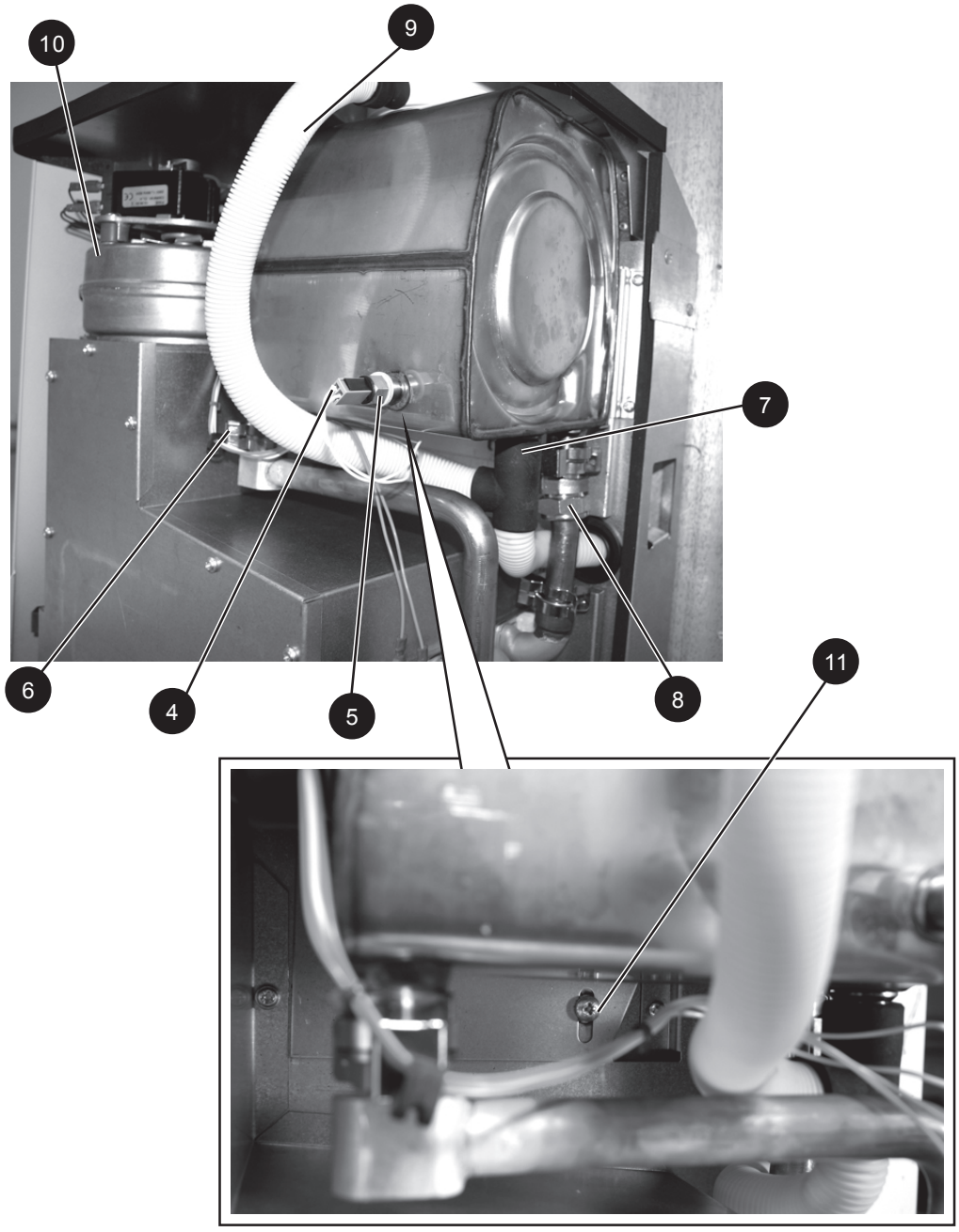

79 FAULT FINDING

The operation of the LED's and fault codes shall be as follows:

LED 1 - Burner status LED

LED 2 - Lockout / Error LED

LED 3 - Mode LED

(Refer to Frame 39 for LED positions)

During normal operation LED 1 and LED 3 will function as defined below:

Status	LED 1 Green	LED 3 Green
No demand, standby	Off	Off
CH demand, burning	On	Off
DHW demand, burning	On	On
CH demand, not burning	Flashing	Off
DHW demand, not burning	Flashing	On
Frost demand, burning	On	Flashing
Frost demand, not burning	Flashing	Flashing

Note. *At all times LED 2 will be off.*

Lockout and error conditions will be indicated by the illumination of LED 2 for a period of 10 seconds on and 2 seconds off. During the 10 second on period LED 3 will flash a variable number of times, 0.5 seconds on, 0.5 seconds off. The number of times that it flashes will define the error code as detailed below:

ERROR CODE 1 - LOCKOUT	**GO TO FRAME 80**
ERROR CODE 2 - OVERHEAT ALARM	**GO TO FRAME 81**
ERROR CODE 3 - WPS / PPS ALARM	**GO TO FRAME 82**
ERROR CODE 4 - APS / FAN ALARM	**GO TO FRAME 83**
ERROR CODE 5 - CH THERMISTOR FAULT	**GO TO FRAME 84**
ERROR CODE 6 - DHW THERMISTOR FAULT	**GO TO FRAME 85**
ERROR CODE 7 - FLUE OVERHEAT	**GO TO FRAME 86**
ERROR CODE 8 - CONDENSATE BLOCKAGE	**GO TO FRAME 87**

80 ERROR CODE 1 - LOCKOUT

Causes:
Failed to light after 5 ignition attempts or after flame failure.

Check:
- Gas Flow
- Spark
- Detection

Note.
Air pressure switch failure results in 5 - Code 4 cycles followed by Error Code 1.

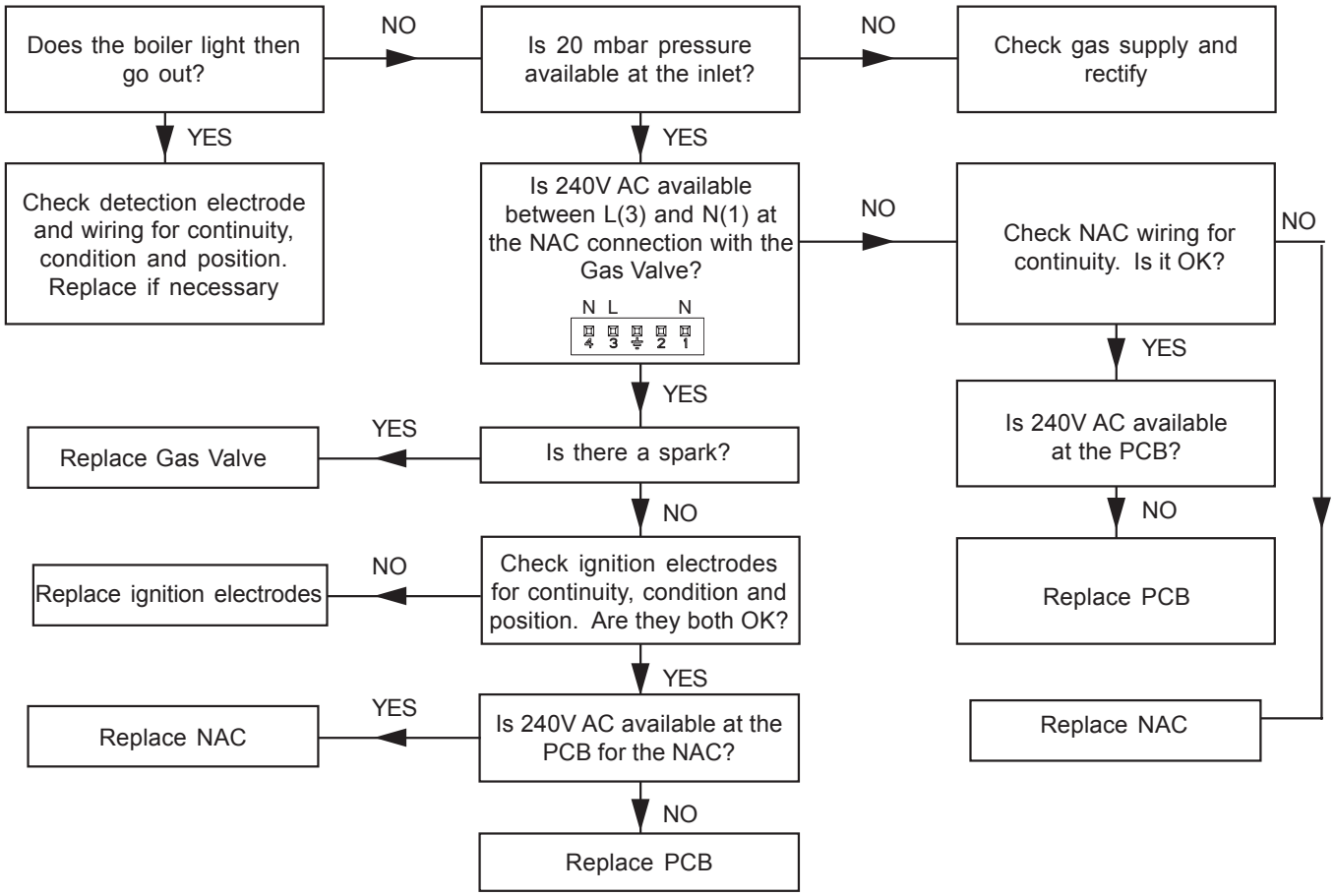

81 ERROR CODE 2 - OVERHEAT ALARM

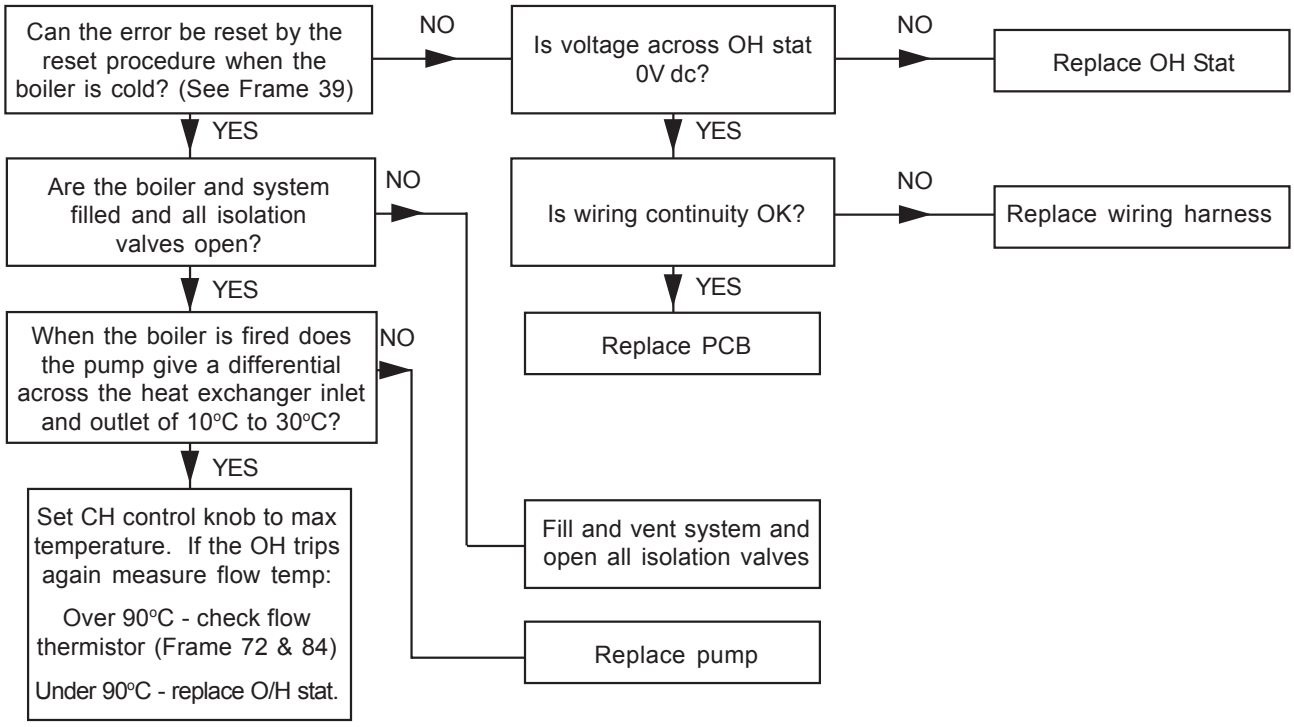

82 ERROR CODE 3 - WPS / PPS ALARM

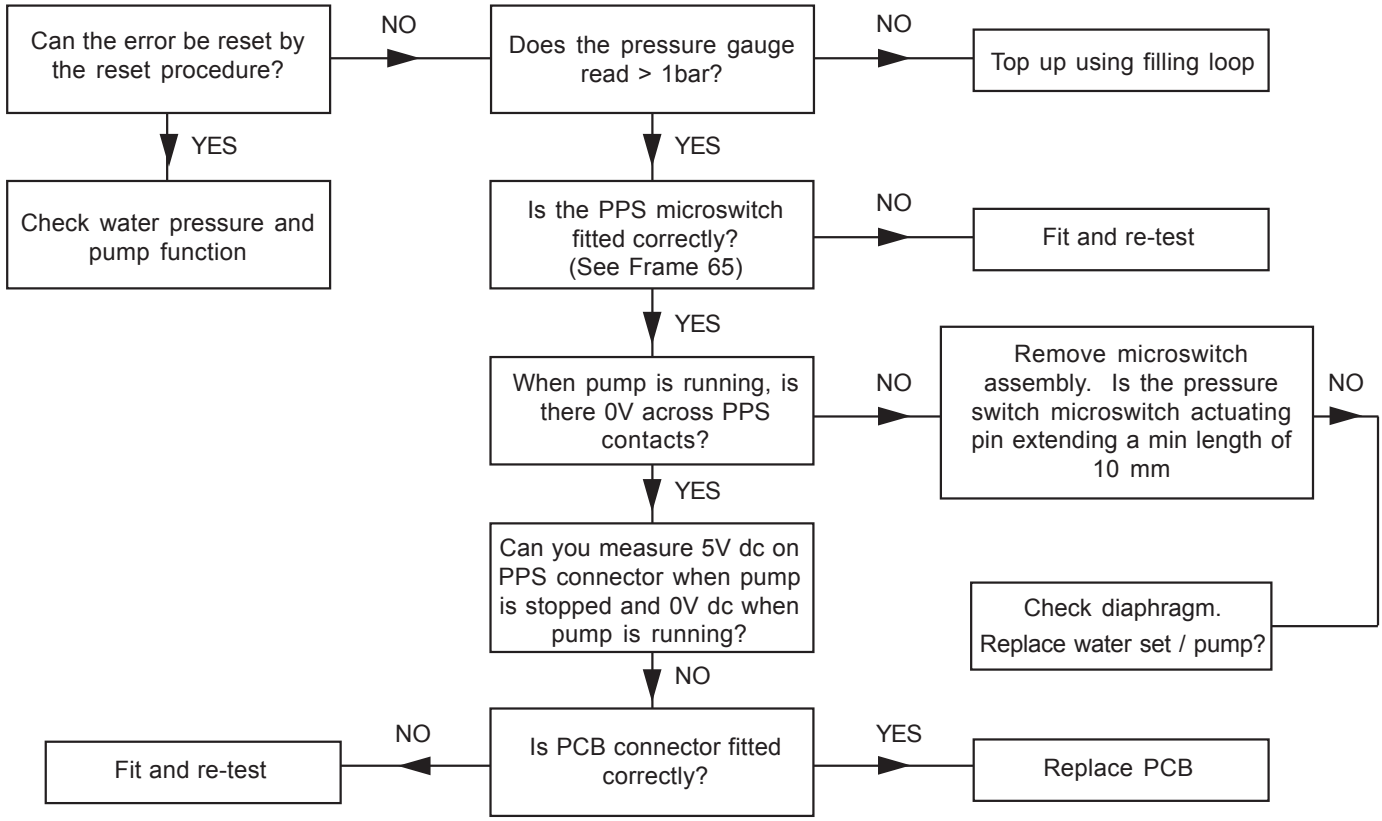

83 ERROR CODE 4 - APS / FAN ALARM

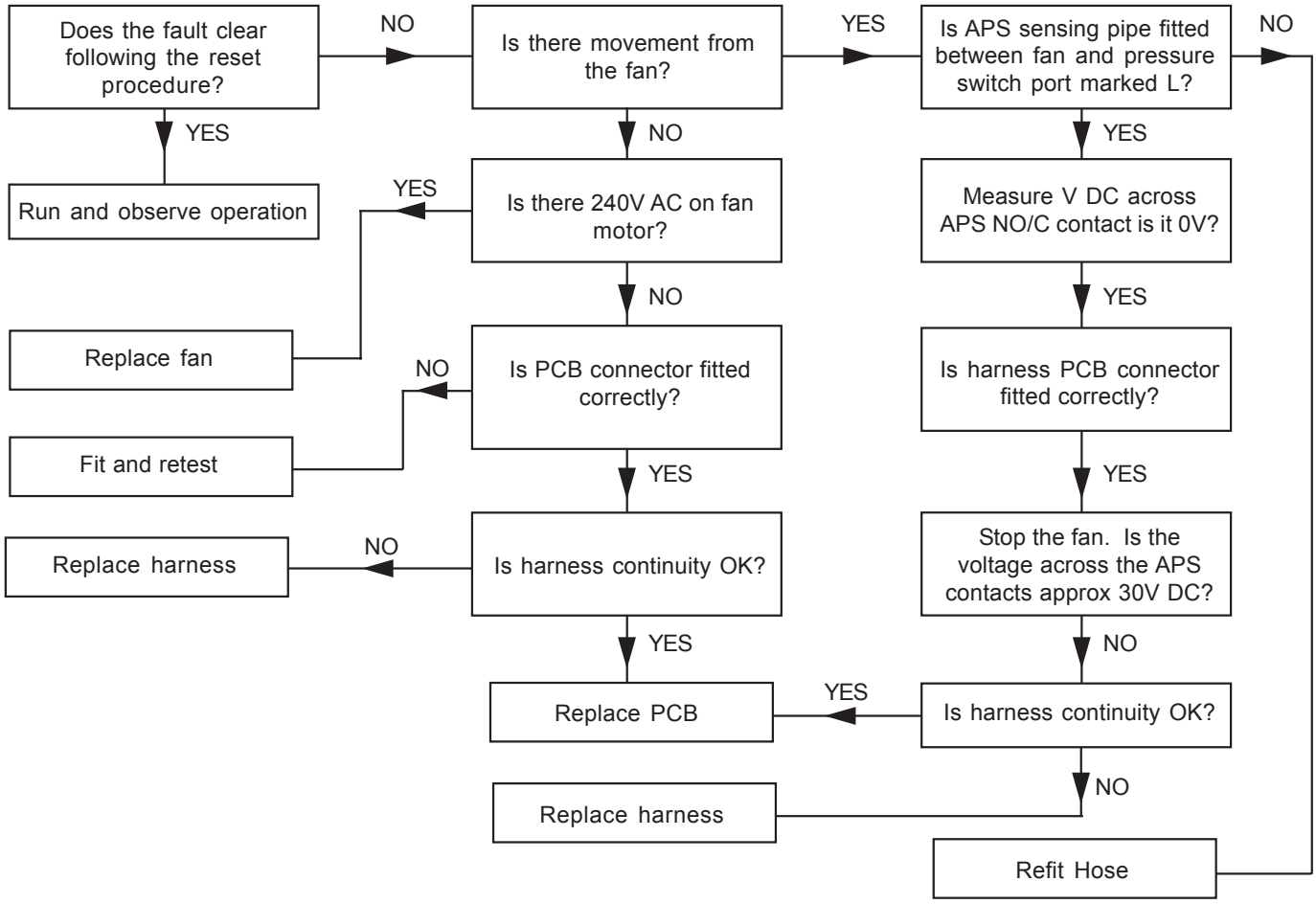

84 ERROR CODE 5 - CH THERMISTOR FAULT

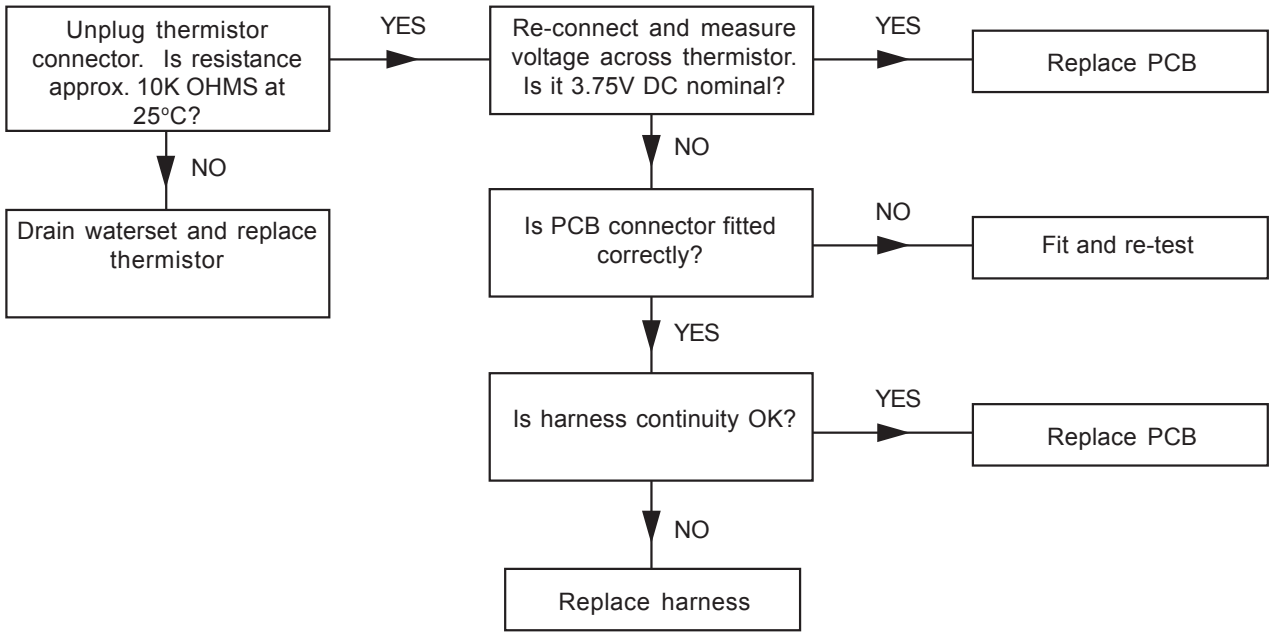

85 ERROR CODE 6 - DHW THERMISTOR FAULT

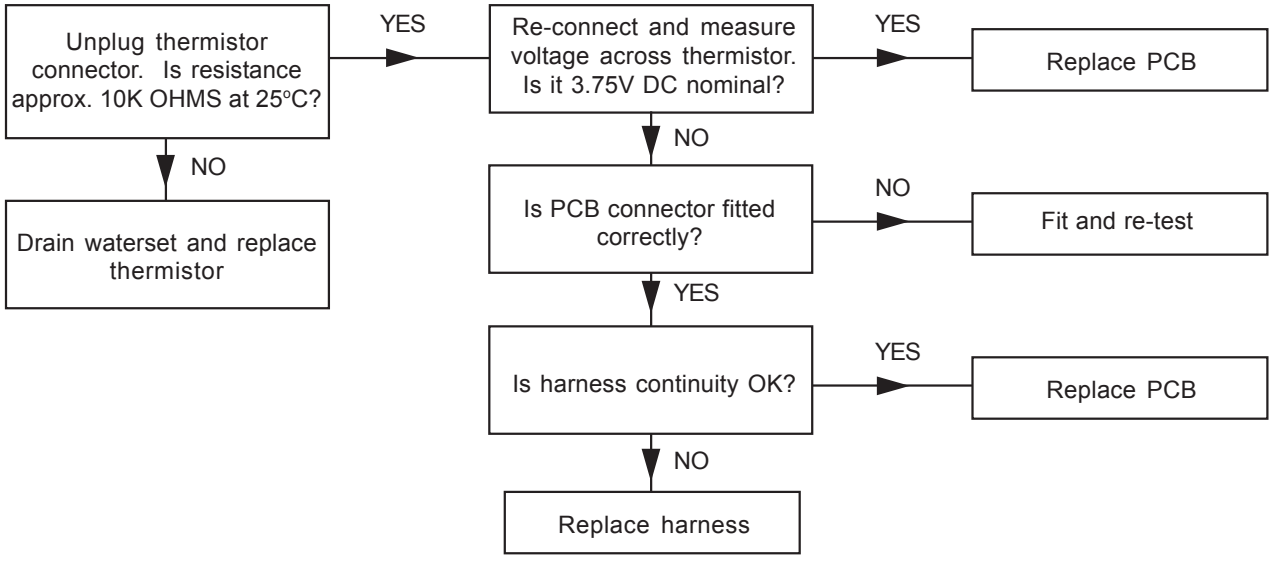

86 ERROR CODE 7 - FLUE GAS OVERHEAT

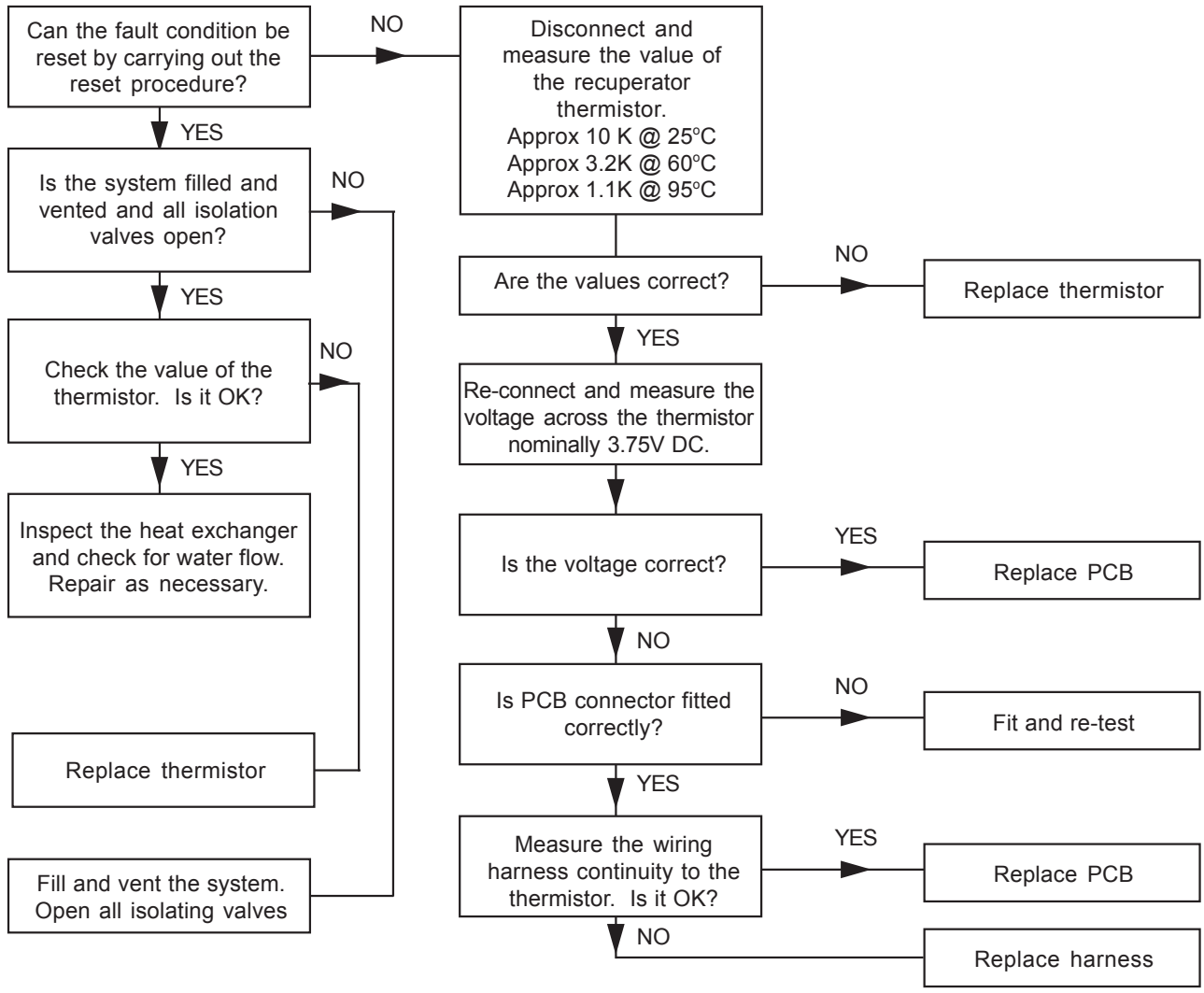

87 ERROR CODE 8 - CONDENSATE BLOCKAGE ALARM

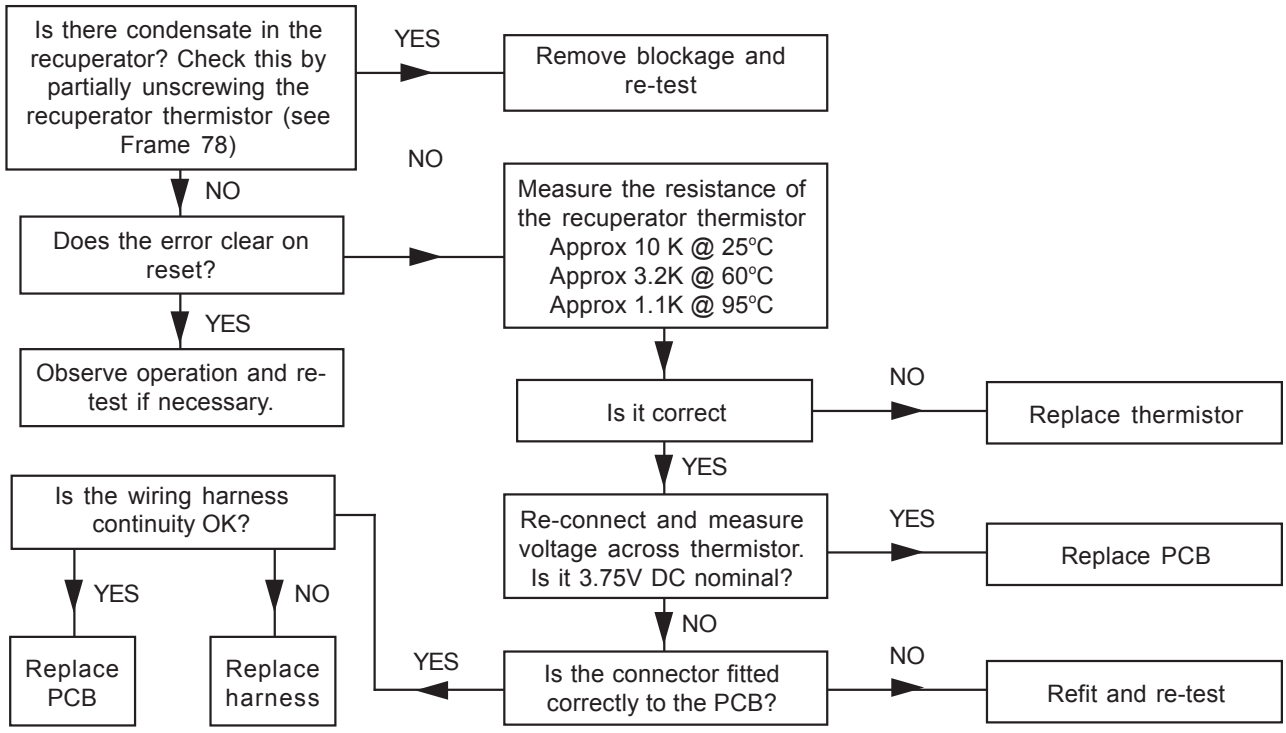

SHORT LIST OF PARTS

The following are parts commonly required due to damage or expendability. Their failure or absence is likely to affect safety or performance of this appliance.

The list is extracted from the British Gas List of Parts, which contains all available spare parts.

The full list is held by British Gas Services, Caradon Ideal Limited distributors and merchants.

When ordering spares please quote:

1. Boiler model
2. Appliance G.C. No.
3. Description.
4. Quantity.
5. Product number.

When replacing any part on this appliance use only spare parts that you can be assured conform to the safety and performance specification that we require. Do not use reconditioned or copy parts that have not been clearly authorised by Ideal Boilers.

Key No.	G.C. Part No.	Description		Qty./Boiler	Product Number
1		Main heat exchanger + 'o' rings	C24	1	173 854
			C28/C32	1	173 855
2		Fan	C24	1	173 856
			C28/C32	1	173 857
5		Recuperator		1	173 861
6		Burner	C24	1	173 862
			C28/C32	1	173 863
8		Injectors	C24	14	173 866
			C28/C32	15	173 867
9		Detection electrode		1	173 868
10		Ignition electrode LH & RH		1	173 869
17	H07 717	Safety Valve		1	173 203
19		Pump head	C24/C28	1	173 877
			C32	1	173 878
20		Diverter Valve Actuator		1	173 879
21		Auto air vent valve		1	173 880
25		Casing Controls Door		1	173 884
26		Controls Fascia		1	173 885
27		Knob potentiometer		2	173 886
28		Panel Control Cover		1	173 887
29		Panel Control Support		1	173 888
30		Panel User Wiring Cover		1	173 889
31		Main PCB		1	173 890
33		Pressure Gauge		1	173 892
34		Lens Clear		3	173 893
35		Expansion PCB		1	173 894
36	H07 673	Mains Switch		1	173 161
40		Ignition Unit - NAC		1	173 901
41		Air pressure switch	C24	1	173 902
			C28/C32	1	173 903
42		Panel Front Sealing		1	173 905
43		Casing LH Side Panel		1	173 906
44		Casing RH Side Panel		1	173 907
45		Casing Front Panel		1	173 908
46		Casing Bottom Panel		1	173 913
50		Gas valve & gaskets		1	173 925
51		Condensate Blockage Thermistor		1	173 926
52		Overheat thermostat		1	173 927
53		Expansion vessel		1	173 928
56		Combustion Chamber Insulation Pack	C24	1	173 910
			C28/C32	1	173 911
57		Thermistor - Waterset CH & DHW		1	173 932
58	H07 781	DHW plate heat exchanger	C24	1	173 544
	E69 408		C28	1	170 995
	H07 782		C32	1	173 545
59		Gasket Kit (servicing)		1	173 936
60		Fixings Kit (servicing)		1	173 937
61		Fan Suppressor		1	174 051

88 SHORT LIST

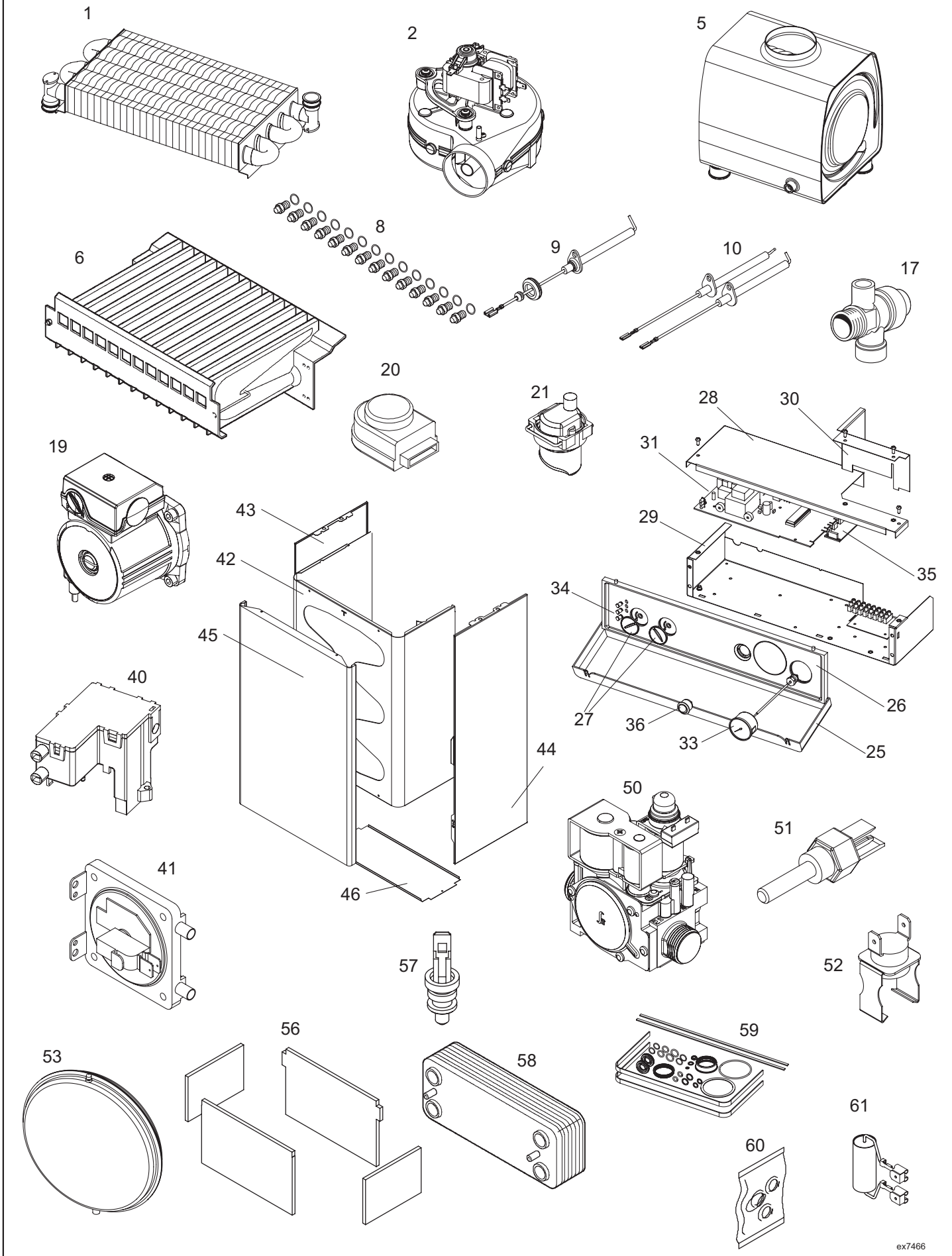

NOTES

INSTALLER NOTIFICATION GUIDELINES

IT IS A REQUIREMENT OF CORGI MEMBERSHIP TO REGISTER EVERY GAS APPLIANCE

In addition a change to Building Regulations (England and Wales) requires the installer to notify when installing a heating appliance, as from 1st April 2005.

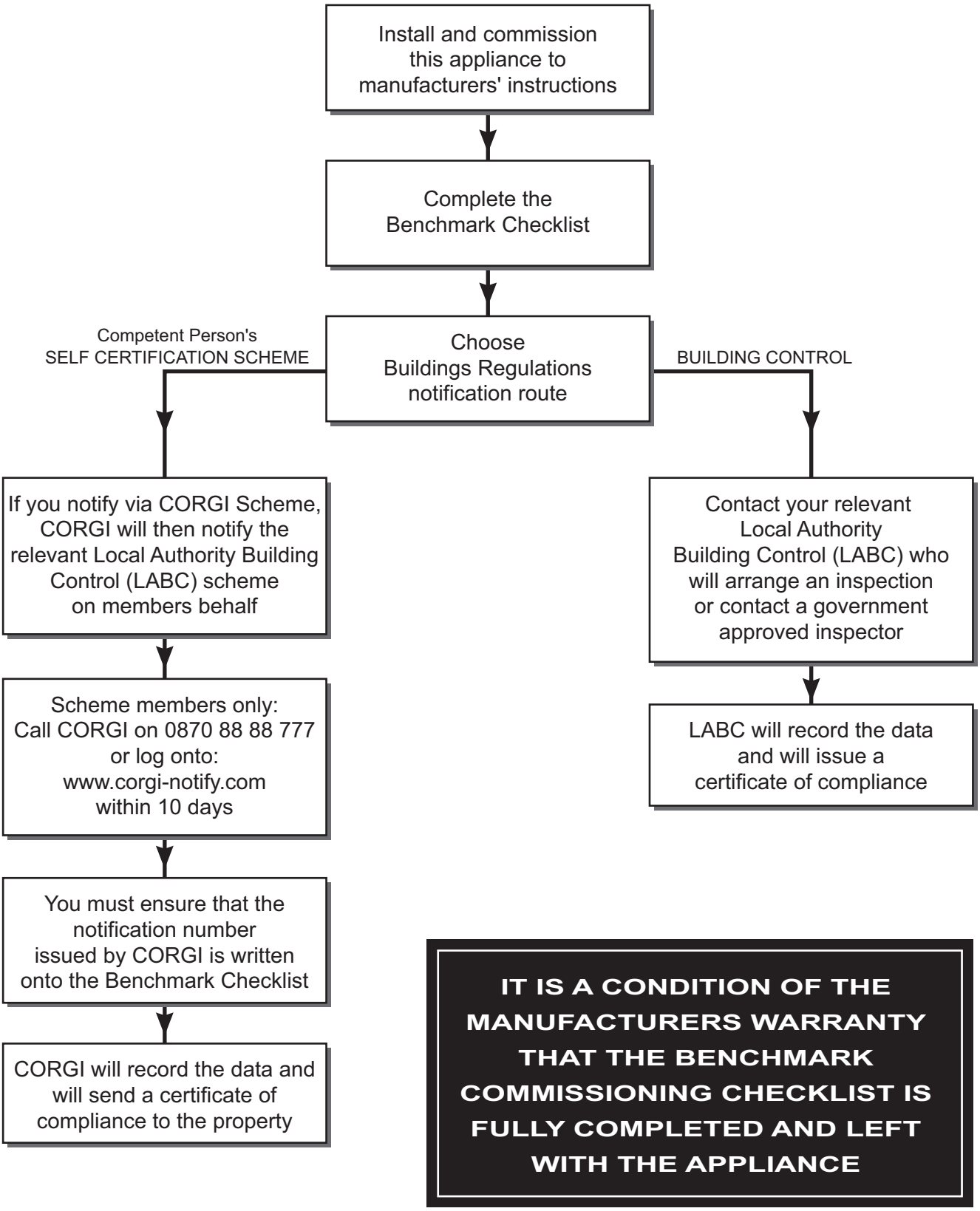

IT IS A CONDITION OF THE MANUFACTURERS WARRANTY THAT THE BENCHMARK COMMISSIONING CHECKLIST IS FULLY COMPLETED AND LEFT WITH THE APPLIANCE

BENCHMARK No. | | | | | | |

GAS BOILER COMMISSIONING CHECKLIST

BOILER SERIAL No. _____ **NOTIFICATION No.** _____

CONTROLS *To comply with the Building Regulations, each section must have a tick in one or other of the boxes*

TIME & TEMPERATURE CONTROL TO HEATING	ROOM T/STAT & PROGRAMMER/TIMER	☐	PROGRAMMABLE ROOMSTAT	☐
TIME & TEMPERATURE CONTROL TO HOT WATER	CYLINDER T/STAT & PROGRAMMER/TIMER	☐	COMBI BOILER	☐
HEATING ZONE VALVES	FITTED	☐	NOT REQUIRED	☐
HOT WATER ZONE VALVES	FITTED	☐	NOT REQUIRED	☐
THERMOSTATIC RADIATOR VALVES	FITTED	☐		
AUTOMATIC BYPASS TO SYSTEM	FITTED	☐	NOT REQUIRED	☐

FOR ALL BOILERS CONFIRM THE FOLLOWING

THE SYSTEM HAS BEEN FLUSHED IN ACCORDANCE WITH THE BOILER MANUFACTURERÕS INSTRUCTIONS? ☐

THE SYSTEM CLEANER USED

THE INHIBITOR USED

FOR THE CENTRAL HEATING MODE, MEASURE & RECORD

GAS RATE		m^3/hr		ft^3/hr
BURNER OPERATING PRESSURE (IF APPLICABLE)	☐	N/A		mbar
CENTRAL HEATING FLOW TEMPERATURE				°C
CENTRAL HEATING RETURN TEMPERATURE				°C

FOR COMBINATION BOILERS ONLY

HAS A WATER SCALE REDUCER BEEN FITTED? YES ☐ NO ☐

WHAT TYPE OF SCALE REDUCER HAS BEEN FITTED?

FOR THE DOMESTIC HOT WATER MODE, MEASURE & RECORD

GAS RATE		m^3/hr		ft^3/hr
MAXIMUM BURNER OPERATING PRESSURE (IF APPLICABLE)	☐	N/A		mbar
COLD WATER INLET TEMPERATURE				°C
HOT WATER OUTLET TEMPERATURE				°C
WATER FLOW RATE				lts/min

FOR CONDENSING BOILERS ONLY CONFIRM THE FOLLOWING

THE CONDENSATE DRAIN HAS BEEN INSTALLED IN ACCORDANCE WITH THE MANUFACTURER'S INSTRUCTIONS? YES ☐

FOR ALL INSTALLATIONS CONFIRM THE FOLLOWING

THE HEATING AND HOT WATER SYSTEM COMPLIES WITH CURRENT BUILDING REGULATIONS ☐

THE APPLIANCE AND ASSOCIATED EQUIPMENT HAS BEEN INSTALLED AND COMMISSIONED IN ACCORDANCE WITH THE MANUFACTURER'S INSTRUCTIONS ☐

IF REQUIRED BY THE MANUFACTURER, HAVE YOU RECORDED A CO/CO_2 RATIO READING? N/A ☐ YES _____ CO/CO_2 RATIO

THE OPERATION OF THE APPLIANCE AND SYSTEM CONTROLS HAVE BEEN DEMONSTRATED TO THE CUSTOMER ☐

THE MANUFACTURER'S LITERATURE HAS BEEN LEFT WITH THE CUSTOMER ☐

COMMISSIONING ENG'S NAME PRINT _____ CORGI ID No. _____

SIGN _____ DATE _____

SERVICE INTERVAL RECORD

It is recommended that your heating system is serviced regularly
and that you complete the appropriate Service Interval Record Below.

Service Provider. Before completing the appropriate Service Interval Record below, please ensure you have carried out the service as described in the boiler manufacturer's instructions. Always use the manufacturer's specified spare part when replacing all controls

SERVICE 1 DATE
ENGINEER NAME
COMPANY NAME
TEL No.
CORGI ID CARD SERIAL No.
COMMENTS
SIGNATURE

SERVICE 2 DATE
ENGINEER NAME
COMPANY NAME
TEL No.
CORGI ID CARD SERIAL No.
COMMENTS
SIGNATURE

SERVICE 3 DATE
ENGINEER NAME
COMPANY NAME
TEL No.
CORGI ID CARD SERIAL No.
COMMENTS
SIGNATURE

SERVICE 4 DATE
ENGINEER NAME
COMPANY NAME
TEL No.
CORGI ID CARD SERIAL No.
COMMENTS
SIGNATURE

SERVICE 5 DATE
ENGINEER NAME
COMPANY NAME
TEL No.
CORGI ID CARD SERIAL No.
COMMENTS
SIGNATURE

SERVICE 6 DATE
ENGINEER NAME
COMPANY NAME
TEL No.
CORGI ID CARD SERIAL No.
COMMENTS
SIGNATURE

SERVICE 7 DATE
ENGINEER NAME
COMPANY NAME
TEL No.
CORGI ID CARD SERIAL No.
COMMENTS
SIGNATURE

SERVICE 8 DATE
ENGINEER NAME
COMPANY NAME
TEL No.
CORGI ID CARD SERIAL No.
COMMENTS
SIGNATURE

SERVICE 9 DATE
ENGINEER NAME
COMPANY NAME
TEL No.
CORGI ID CARD SERIAL No.
COMMENTS
SIGNATURE

SERVICE 10 DATE
ENGINEER NAME
COMPANY NAME
TEL No.
CORGI ID CARD SERIAL No.
COMMENTS
SIGNATURE

Technical Training

The Ideal Boilers Technical Training Centre offers a series of first class training courses for domestic, commercial and industrial heating installers, engineers and system specifiers.
For details of courses please ring: 01482 498 432

benchmark™

The code of practice for the installation, commissioning & servicing of central heating systems

CERTIFIED PRODUCT
Manufactured under a BS EN ISO 9001: 2000
Quality System accepted by BSI

Ideal Boilers, P.O. Box 103, National Ave, Kingston upon Hull, HU5 4JN. Telephone: 01482 492 251 Fax: 01482 448 858. Registration No. London 322 137.

Caradon Ideal Limited pursues a policy of continuing improvement in the design and performance of its products. The right is therefore reserved to vary specification without notice.

CE

Ideal BOILERS
ENGINEERED FOR PEACE OF MIND

Caradon
Ideal Limited

Ideal Installer/Technical Helpline: 01482 498 663
www.idealboilers.com

users guide

excel

Your Ideal users guide

See reverse for **excel** installation & servicing instructions

HE C24, C28, C32

When replacing any part on this appliance use only spare parts that you can be assured conform to the safety and performance specification that we require. Do not use reconditioned or copy parts that have not been clearly authorised by Ideal Boilers.

Ideal BOILERS

ENGINEERED FOR PEACE OF MIND

excel HE C24, C28, C32	**C24**	**G.C. Appliance No. 47-348-35**
(Natural Gas Only)	**C28**	**G.C. Appliance No. 47-348-36**
Destination Countries: GB, IE	**C32**	**G.C. Appliance No. 47-348-37**

Introduction

The **excel HE** is a wall mounted, room sealed, condensing combination boiler, featuring full sequence automatic spark ignition and fan assisted combustion.

Due to the high efficiency of the boiler, condensate is produced from the flue gases and this is drained to a suitable disposal point through the plastic waste pipe at the lower rear of the boiler. A condensate 'plume' will also be visible at the flue terminal.

The **excel HE** is a combination boiler providing both central heating and domestic hot water on demand.

Safety

Current Gas Safety (Installation & Use) Regulations or rules in force.

In your own interest, and that of safety, it is the law that this boiler must be installed by a CORGI registered installer, in accordance with the above regulations.

In Ireland, the installation must be carried out by a Competent Person and installed in accordance with the current edition of I.S. 813 “Domestic Gas Installations”, the current Building Regulations and reference should be made to the current ETCI rules for electrical installation.

It is essential that the instructions in this booklet are strictly followed, for safe and economical operation of the boiler.

Electricity Supply

This appliance must be earthed.

Supply: 230 V ~ 50 Hz. The fusing should be 3A.

Connection must be made in a way that allows complete isolation of the electrical supply such as a double-pole switch, having a 3mm (1/8") contact separation in both poles, serving only the boiler and system controls. Alternatively, a 3-pin UNSWITCHED socket may be used. The means of isolation must be accessible to the user after installation.

Important Notes

- This appliance must not be operated without the casing correctly fitted and forming an adequate seal.
- If the boiler is installed in a compartment then the compartment MUST NOT be used for storage purposes.
- If it is known or suspected that a fault exists on the boiler then it MUST NOT BE USED until the fault has been corrected by a CORGI registered installer or in Ireland a competent person.
- Under NO circumstances should any of the sealed components on this appliance be used incorrectly or tampered with.

In cases of repeated or continuous shutdown a CORGI registered installer or in Ireland a competent person should be called to investigate and rectify the condition causing this and carry out an operational test. Only the manufacturers original parts should be used for replacement.

Minimum Clearances

Clearances of **200mm (8"**) above, **100mm (4"**) below, **10mm (3/8"**) at the sides and **450mm (17 3/4"**) at the front of the boiler casing must be allowed for servicing.

The minimum front and bottom clearance allowed when built into a cupboard is 5mm.

To light the boiler.

If a programmer is fitted refer to separate instructions for the programmer before continuing.

1. Switch the electricity supply on.
2. If the boiler is to be used for CH and DHW position the main switch (B) as in the following illustration.

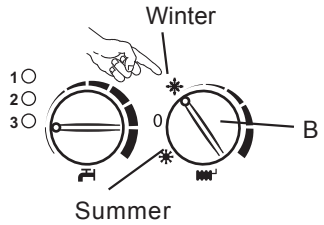

3. The boiler will commence the ignition sequence. The green operational light 1 (E) indicates boiler running for central heating.

Control of CH Temperature

The output temperature of CH water is adjustable from a minimum of about 38°C to a maximum of about 82°C by turning the knob B. The green operational light 1 (E) indicates boiler running for Central Heating.

Approx. CH flow temperature for the boiler thermostat settings:

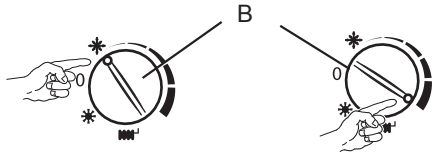

Minimum (38°C) **Maximum (82°C)**

Control of DHW Temperature

The temperature of the DHW leaving the boiler can be varied from a minimum of about 40°C to a maximum of about 65°C (within the power limits for the appliance) by turning the temperature control knob C. The green operational lights 1 and 3 (E) indicates boiler running for domestic hot water.

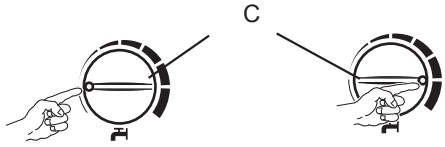

Minimum (40°C) **Maximum (65°C)**

All CORGI registered installers carry a CORGI ID card, and have a registration number. Both should be recorded in the **Benchmark** Commissioning Checklist. You can check your installer by calling CORGI direct on 01256 372300.

Caradon Ideal Limited is a member of the Benchmark initiative and fully supports the aims of the programme. Benchmark has been introduced to improve the standards of installation and commissioning of central heating systems in the UK and to encourage the regular servicing of all central heating systems to ensure safety and efficiency.

THE BENCHMARK SERVICE INTERVAL RECORD MUST BE COMPLETED AFTER EACH SERVICE

Adjustment of the DHW temperature is completely separate from that of the CH circuit.

The adjustment system integrated within the boiler automatically controls the flow of gas to the burner in order to keep the temperature of DHW delivered constant, between the limits of maximum and minimum output.

Where the demand is at a low level or with the temperature set to the minimum, it is normal to see a cycle of lighting and extinguishing of the burner when running.

Adjustment

It is advisable to adjust the DHW temperature to a level suitable for the demand, minimising the need to mix with cold water. In this way, the automatic control facilities will be fully exploited.

Moreover, where the amount of limescale present in the water may be particularly great, not exceeding the position as shown in the following illustration (about 50°C) minimises annoying incidence of scale deposits and clogging.

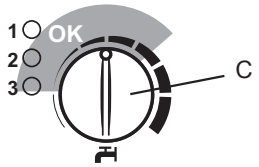

In these cases, however, it is advisable to install a small water treatment device or softener. With such a device you should avoid periodic descaling.

Consequently, the DHW heat exchanger will keep its performance consistent for a longer period of time with resulting gas savings.

To Shut Down the Boiler

For Short Periods

To turn the boiler off set the main switch (B) to the '0' position.

For long periods

When you do not expect to use the boiler for a long period:

1. Set the boiler 'ON/OFF' switch (A) to 'OFF' and switch the electricity supply off.
2. For longer periods the entire system should be drained.

To Relight the Boiler

Repeat the procedure detailed in 'To Light The Boiler'.

Frost protection

excel HE appliances are provided with a built in anti-freeze system that operates the boiler when the temperature is below 5°C. Internal frost protection operates regardless of the position of the main switch and CH heating thermostat knob (B). Therefore, when the boiler is not lit and used in cold weather, with consequent risk of freezing, the supply to the boiler should be left switched on.

If the system includes a frost thermostat then, during cold weather, the boiler should ONLY be turned OFF at the time switch (if fitted). The mains supply should be left switched ON, with the boiler thermostat left in the normal running position.

Loss of system water pressure

The gauge (D) indicates the central heating system pressure. If the pressure is seen to fall below the original installation pressure of 1-2 bar over a period of time then a water leak is indicated. In this event a CORGI registered installer or in Ireland a competent person should be consulted.

Note. ***THE BOILER WILL NOT FIRE IF THE PRESSURE HAS REDUCED TO ZERO FROM THE ORIGINAL SETTING.***

Condensate Drain

The condensate drain (G) must not be modified or blocked.

Blockage of the condensate drain, caused by debris or freezing, can cause automatic shutdown of the boiler.

If freezing is suspected and the pipe run is accessible an attempt may be made to free the obstruction by pouring hot water over the exposed pipe and clearing any blockage from the end of the pipe. If this fails to remedy the problem the assistance of a CORGI registered installer or in Ireland a competent person should be sought.

Escape of gas

Should a gas leak or fault be suspected, contact your local gas supplier without delay.

Do NOT search for gas leaks with a naked flame.

Cleaning

For normal cleaning simply dust with a dry cloth.

To remove stubborn marks and stains, wipe with a damp cloth and finish off with a dry cloth.

DO NOT use abrasive cleaning materials.

Maintenance

The appliance should be serviced at least once a year by a CORGI registered installer or in Ireland a competent person.

1 BOILER CONTROLS

Legend

A. Boiler ON/OFF switch
B. Main switch & CH thermostat knob
C. DHW thermostat knob
D. Pressure gauge
E. Operational lights (1 & 3)/ Fault indication light (2)
F. Optional programmer
G Condensate drain

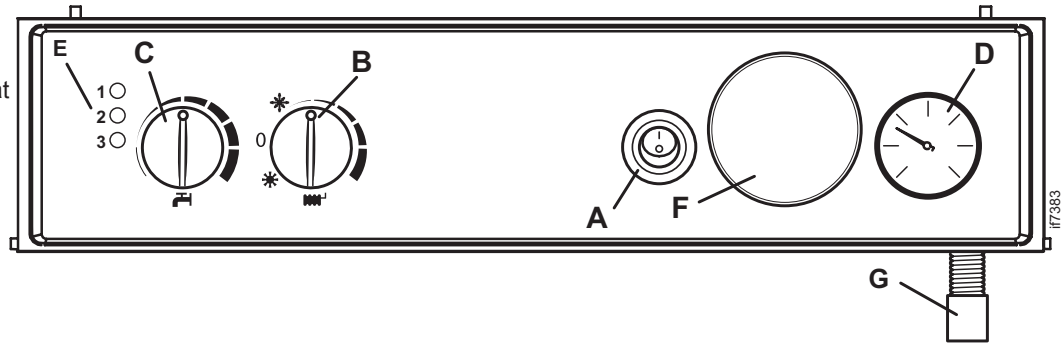

CAUTION. To avoid the possibility of injury during the installation, servicing or cleaning of this appliance care should be taken when handling edges of sheet steel components

Faults

No heating or hot water

Check that gas and electricity are available at the boiler and that all switches are on.

Check that the system water pressure gauge (D) reads at least 0.5 bar.

Reset Procedure

Check the red fault indication light (2). If it is illuminated turn the main switch (B) to '0', wait until the boiler reaches standby state, indicated by no fan or pump running. This can take up to 10 minutes in an overheat condition. Turn the main switch (B) to the winter setting wait for 2 seconds then set the main switch (B) back to the desired position to restart the ignition sequence.

Hot water but no heating (winter setting)

Check that the programmer and room thermostat (if fitted) are both calling for heat.

Heating but no hot water

Check that cold water flows out of the taps at a minimum rate of 3.5 litres per minute (or 1 pint in 10 seconds or less). If not, look for stop valves not fully open.

If these simple checks fail to solve the problem, or the problem recurs, consult your service engineer.

POINTS FOR THE BOILER USER

Note. *In line with our current warranty policy we would ask that you check through the following guide to identify any problems external to the boiler prior to requesting a service engineers visit. Should the problem be found to be other than with the appliance we reserve the right to levy a charge for the visit, or for any pre-arranged visit where access is not gained by the engineer.*

TROUBLESHOOTING - TYPICAL NON PRODUCT FAULTS

Problem	Solution
Boiler is not working for central heating or hot water	• Is there power to the boiler – check by switching the boiler 'ON/OFF' switch (A) off and then back on. The lights (E) should flash. If not this is not a boiler fault - contact the installer. • Check pressure gauge on boiler (D) shows a minimum of 1 bar. If not re-pressurise via the filling loop to 1 bar (if unsure contact your installer), turn off the tap on the filling loop and carry out ignition restart sequence detailed under 'Faults'. If unable to do so or if the pressure continues to drop then contact your installer. • Is the fault indication light (2) alight - see Reset Procedure under 'Faults'.
Boiler goes through ignition sequence but will not fire for either central heating or hot water and then goes to ignition lockout	• Check gas supply (try another gas appliance – cooker/fire etc.) – If no gas supply then this is not a boiler fault – contact gas supplier.
Fan and pump run continuously but there is no attempt at ignition	• Check that the flue product test cap, on top of the boiler is fitted correctly.
Operating for hot water but will not operate for central heating.	• Check that integral programmer (if fitted) is set to an 'on' period and the function switch is set to 'auto' - If it still does not operate contact your installer. • If fitted with an external programmer check that the central heating channel is set at an 'on' period - If it still does not operate contact your installer. • Check the room thermostat is set at the required temperature - Test the room thermostat by turning fully up - If this does not respond contact your installer. • Check the CH thermostat knob (B) is set at the winter setting for central heating.

The nature of all combination boilers is to heat up water directly from the incoming mains water supply directly through the boiler to supply domestic hot water at the stated flow rates, (as shown in the boiler installation instructions), to achieve a set temperature rise. As the ambient temperature of the cold main varies during the summer and winter months it is likely in the colder winter months that the flow rate will need to be reduced at the outlet taps to achieve the same temperatures achieved in the warmer summer months. **This is not a fault with the appliance but is relevant to the varying temperature of the incoming cold mains water supply.**