THE HENRAD INSTALLATION & SERVICING MANUAL

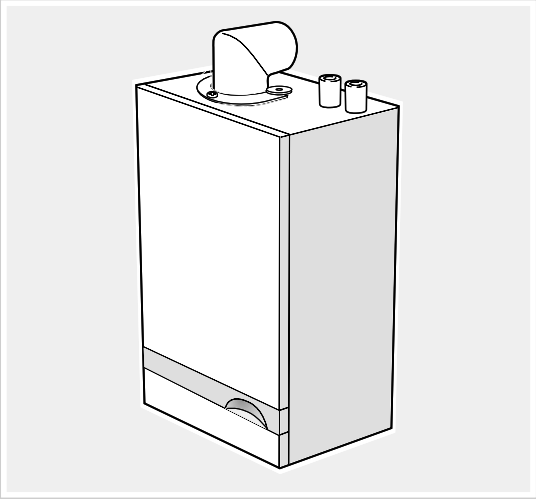

Henrad

the super efficiency boiler

Wall mounted, gas fired, fanned flue condensing boiler

SE 30 FF - 80 FF

HENRAD

Installers guide to domestic central heating boilers

GENERAL DATA

Table 1 - Boiler Data

Boiler Size			SE 30 FF	SE 40 FF	SE 50 FF	SE 60 FF	SE 70 FF	SE 80 FF
Gas supply connection		(in. BSP)	Rc 1/2 (1/2" BSP Female)					
Flow connection			22mm copper (FEMALE) (via adaptors supplied)				28mm copper (MALE)	
Return connection			22mm copper (FEMALE) (via adaptors supplied)				28mm copper (MALE)	
Maximum static water head		m (ft.)	30.5 (100)					
Minimum static water head		m (ft.)	0.45 (1.5)					
Electrical supply			230 V ~ 50 Hz					
Boiler power consumption			50W					
Fuse rating			External: 3A Internal: F2A to BS 4265					
Water content		litre (gal.)	1.65 (0.36)				1.95 (0.43)	
Dry Weight		kg (lb.)	26.0 (57.3)				27.0 (59.5)	
Boiler size	Height	mm (in.)	600 (23.6)					
	Width	mm (in.)	390 (15.0)					
	Depth	mm (in.)	270 (10.6)					
Flue duct diameter		mm (in.)	100 (4.0)					

Table 2 - Performance Data

Boiler Size			SE 30 FF	SE 40 FF	SE 50 FF	SE 60 FF	SE 70 FF	SE 80 FF
Boiler input	Nett	kW	9.2	12.3	15.3	18.4	21.5	24.6
	CV	Btu/h	31,400	42,000	52,200	62,800	73,400	84,000
Boiler input	Gross	kW	10.2	13.6	17.0	20.4	23.9	27.3
	CV	Btu/h	34,900	46,500	58,100	69,800	81,400	93,000
	Gas consumption	l/s (cu.ft/h)	0.26 (33.6)	0.35 (44.9)	0.44 (56.1)	0.53 (67.3)	0.62 (78.6)	0.70 (89.8)
Boiler output	70 °C Mean water temperature	kW	8.8	11.7	14.7	17.6	20.5	23.4
		Btu/h	30,000	40,000	50,000	60,000	70,000	80,000
	40 °C Mean water temperature	kW	9.4	12.5	15.7	18.8	21.9	25.1
		Btu/h	32,100	42,800	53,500	64,200	74,900	85,600
Burner Setting pressure (HOT)		mbar	10.7	10.0	8.6	10.5	5.3	8.8
		in.w.g.	4.3	4.0	3.5	4.2	2.1	3.5
Seasonal efficiency (SEDBUK)*			[86.1]%	[86.7]%	[86.4]%	[86.3]%	[86.5]%	[86.3]%

*The value used is in the UK government's Standard Assessment Procedure (SAP) for energy rating of dwellings. The test data from which it has been calculated have been certified by BGplc 0087.

Notes.

To obtain the gas consumption:-

a. For l/s divide the gross heat input (kW) by C.V. of the gas (MJ/m^3)

b. For ft^3/h divide the gross heat input (Btu/h) by C.V. of the gas (Btu/ft^3)

CAUTION. To avoid the possibility of injury during the installation, servicing or cleaning of this appliance, care should be taken when handling edges of sheet steel components.

SE FF

Natural Gas only

SE 30 FF ..... G.C. Appliance No. 41 387 46

SE 40 FF ..... G.C. Appliance No. 41 387 47

SE 50 FF ..... G.C. Appliance No. 41 387 48

SE 60 FF ..... G.C. Appliance No. 41 387 49

SE 70 FF ..... G.C. Appliance No. 41 387 50

SE 80 FF ..... G.C. Appliance No. 41 387 51

PI No. 87 AT 2

Data badge - inside RH side panel

Destination Countries: UK, IE

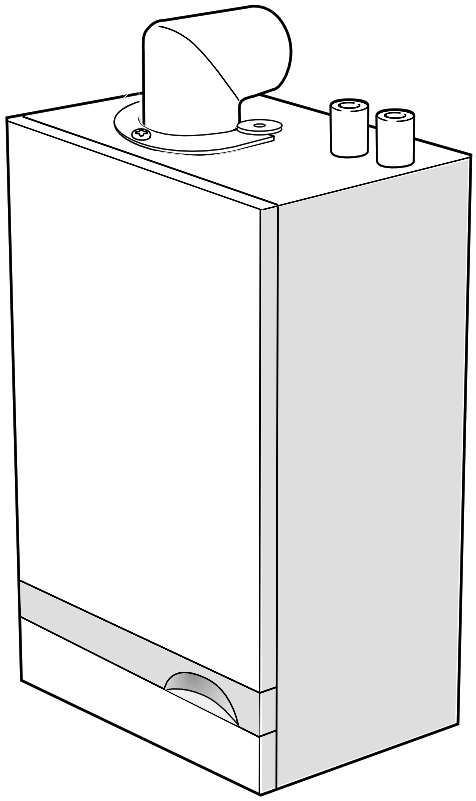

CONTENTS

Air Supply 8

Boiler Clearances 5

Boiler Exploded Diagram 13

Electrical Connections 23

Electrical Supply 8

Electrical Systems Diagrams 25

Extension Ducts - Fitting 22

Fault Finding 43

Flow Wiring Diagram 24

Flue Fitting
- **Rear outlet** 16
- **Side outlet** 19

Flue Installation 7

Gas Safety Regulations 6

Gas Supply 7

Installation 13

Mandatory Requirements 6

Pump 9

Servicing 31

Short List of Parts 48

System Diagrams 9

Terminal Guards 7

Thermostatic Radiator valves 8

Water and Systems 8

Water Connections 5

Water Treatment 12

Wiring Diagrams 24

NOTE TO THE INSTALLER: LEAVE THESE INSTRUCTIONS ADJACENT TO THE GAS METER. ALSO COMPLETE THE BENCHMARK LOG BOOK AND GIVE THIS TO THE CUSTOMER.

benchmark™

1 BOILER WATER CONNECTIONS

The boiler flow and return pipes are supplied fitted to the boiler ready for top connection but can be removed and adapted for bottom connection, if required, either before or after the boiler is hung on the wall. Refer to Frame 43.

Notes.

a. *For the **70 and 80** boilers, 28mm (1") flow and return pipes should be used to and from the boiler.*

*For the **30 to 60** boilers, 22mm (3/4") pipes may be used to connect the boiler, using the 28mm x 22mm adaptors supplied in the hardware pack.*

b. *This appliance is NOT suitable for use with a direct hot water cylinder.*

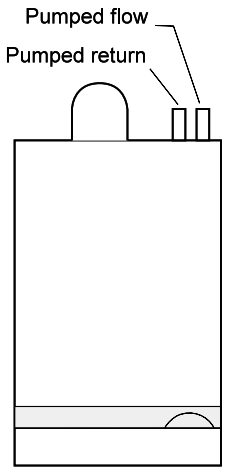

2 BOILER CLEARANCES *all dimensions in mm (in.)*

The following minimum clearances must be maintained for operation and servicing.

Additional space will be required for installation, depending upon site conditions.

Side and Rear Flue

a Provided that the flue hole is cut accurately, e.g. with a core drill, the flue can be installed from inside the building where wall thicknesses do not exceed 600mm (24"). Where the space into which the boiler is going to be installed is less than the length of flue required the flue must be fitted from the outside.

Installation from inside ONLY

b. If a core boring tool is to be used inside the building the space in which the boiler is to be installed must be at least wide enough to accommodate the tool.

REAR FLUE ONLY
MIN. Top clearance required = 145 mm (5 3/4")

SIDE FLUE ONLY

Horizontal length of flue from centre line of boiler to outside wall	Top clearance required (MIN.) Dimn. A
0.5 m	160 mm (6 5/16")
1.0 m	180 mm (7 7/8")
1.5 m	205 mm (8 1/16")
2.0 m	225 mm (8 7/8")
2.5 m	250 mm (9 3/4")
3.0 m	270 mm (10 5/8")

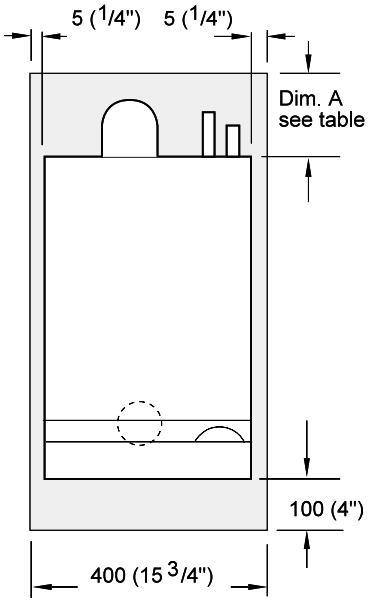

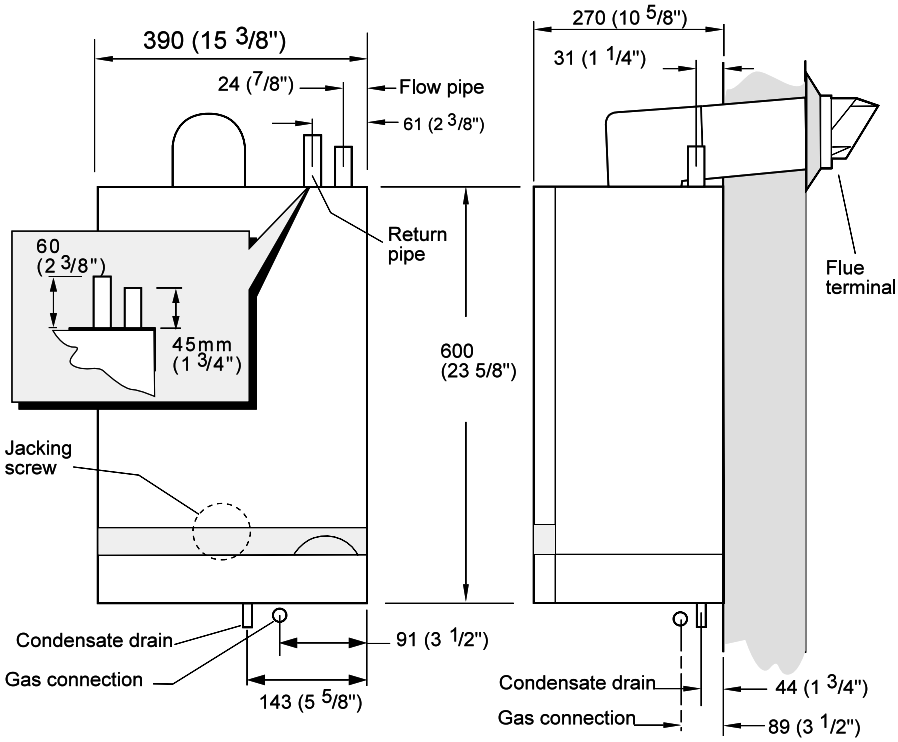

Front view **Side view**

Front clearance: 450mm (17 3/4") from the front of the boiler casing. The minimum front clearance when built in to a cupboard is 5mm (1/4")

INTRODUCTION

SE 30-80 FF are fully automatically controlled, wall mounted, low water content, balanced flue, fanned super efficient condensing gas boilers. They are spot-rated to provide central heating outputs of 8.8 kW (30,000 Btu/h) to 23.4 kW (80,000 Btu/h).

Due to the high efficiency of the boiler a plume of water vapour will form at the flue terminal during operation.

The boiler casing is of white painted mild steel with a drop- down control pod door. The controls pod, also of white painted mild steel, has fixed sides and a removable bottom panel.

The boiler thermostat is located behind the controls pod door.

The heat exchanger is of aluminium.

Note. *These boilers cannot be used on systems which include gravity circulation.*

The boilers are suitable for connection to fully pumped, open vented or sealed water systems. Adequate arrangements for completely draining the system by provision of drain cocks MUST be provided in the installation pipework.

OPTIONAL EXTRA KITS

Roof Flue Kit	For vertical flue connection.
Extension Ducts (1m)	Up to 3.0m (122").
Flue Elbow Kits	90 Degree pack 45 Degree pack (2 per pack)

SAFETY

Gas Safety (Installation and Use) Regulations, 1994, amendments 1996 or rules in force.

It is law that all gas appliances are installed and serviced by a CORGI registered installer (identified by ❀) in accordance with the above regulations. Failure to install appliances correctly could lead to prosecution. It is in your own interest, and that of safety, to ensure the law is complied with.

The installation of the boiler MUST also be in accordance with the latest I.E.E (BS 7671) Wiring Regulations, local building regulations, bye-laws of the local water authority, the building regulations and the Building Standards (Scotland) and any relevant requirements of the local authority.

Detailed recommendations are contained in the following British Standard Codes of Practice:

BS. 6891	Low pressure installation pipes.
BS. 6798	Installation of gas fired hot water boilers of rated input not exceeding 60 kW.
BS. 5449	Forced circulation hot water systems.
BS. 5546	Installation of gas hot water supplies for domestic purposes (2nd Family Gases)
BS. 5440:1	Flues (for gas appliances of rated input not exceeding 60 kW)
BS. 5440:2	Ventilation (for gas appliances of rated input not exceeding 60 kW)

Health & Safety Document No. 635

The Electricity at Work Regulations, 1989.

The manufacturer's notes must NOT be taken, in any way, as overriding statutory obligations.

IMPORTANT. These appliances are CE certificated for safety and performance. It is, therefore, important that no external control devices, e.g. flue dampers, economisers etc., are directly connected to these appliances unless covered by these Installation and Servicing Instructions or as otherwise recommended by **Caradon Plumbing Limited** in writing. If in doubt please enquire.

Any direct connection of a control device not approved by **Caradon Plumbing Limited** could invalidate the certification and the normal appliance warranty. It could also infringe the Gas Safety Regulations and the above regulations.

LOCATION OF BOILER

The boiler must be installed on a flat and vertical wall, capable of adequately supporting the weight of the boiler and any ancillary equipment.

The boiler may be fitted on a combustible wall and insulation between the wall and the boiler is not necessary, unless required by the local authority.

The boiler must not be fitted outside.

Timber Framed Buildings

If the boiler is to be fitted in a timber framed building it should be fitted in accordance with the Institute of Gas Engineering document IGE/UP/7 : 1998.

Bathroom Installations

The boiler may be installed in any room or internal space, although particular attention is drawn to the requirements of the current I.E.E. (BS.7671) Wiring Regulations and, in Scotland, the electrical provisions of the building regulations applicable in Scotland with respect to the installation of the boiler in a room or internal space containing a bath or shower.

Where a room sealed appliance is installed in a room containing a bath or shower then the appliance and any electrical switch or appliance control utilising mains electricity should be so situated that it cannot be touched by a person using the bath or shower.

Where installation will be in an unusual location, special procedures may be necessary and BS 6798 gives detailed guidance on this aspect.

Compartment Installations

A compartment used to enclose the boiler should be designed and constructed specially for this purpose.
An existing cupboard or compartment may be used, provided that it is modified for the purpose.

In both cases details of essential features of cupboard / compartment design, including airing cupboard installation, are to conform to the following:

- BS. 6798.
- The position selected for installation MUST allow adequate space for servicing in front of the boiler. Ventilation of the compartment is not necessary.
- For the minimum clearances required for safety and subsequent service, see the wall mounting template and Frame 2. In addition, sufficient space may be required to allow lifting access to the wall mounting plate.

GAS SUPPLY

The local gas supplier should be consulted, at the installation planning stage, in order to establish the availability of an adequate supply of gas. An existing service pipe must NOT be used without prior consultation with the local gas supplier.

A gas meter can only be connected by the local gas supplier or by a registered CORGI engineer.

An existing meter should be checked, preferably by the gas supplier, to ensure that the meter is adequate to deal with the rate of gas supply required. A minimum working gas pressure of 20 mbar MUST be available at the boiler inlet.

Installation pipes MUST be fitted in accordance with BS. 6891. Pipework from the meter to the boiler MUST be of an adequate size, i.e. not less than 15mm O.D. **Note.** *For pipe runs greater than 3m (10'), 22mm O.D. pipe must be used.*

Do not use pipes of smaller size than the boiler inlet gas connection.

The complete installation MUST be tested for gas soundness and purged as described in the above code.

FLUE INSTALLATION

Pluming will occur at the termination so, where possible, terminal positions which could cause a nuisance should be avoided.

The flue must be installed in accordance with the recommendations of BS. 5440: Part 1.

The following notes are intended for general guidance.

1. The boiler MUST be installed so that the terminal is exposed to external air.
2. It is important that the position of the terminal allows the free passage of air across it at all times.
3. Minimum acceptable spacing from the terminal to obstructions and ventilation openings are specified in Table 3.

Note positions 2-6 *: Due to the terminal design, installation is possible with clearances less than those specified in BS 5440, Part 1.*

Table 3 - Balanced flue terminal position

Terminal Position	Minimum Spacing
1. Directly below or alongside an opening window, air vent or other ventilation opening	300 mm (12")
2. Below guttering, drain pipes or soil pipes	25 mm (1")
3. Below eaves	25 mm (1")
4. Below balconies or a car port roof	25 mm (1")
5. From vertical drain pipes or soil pipes	25 mm (1")
6. From internal or external corners	25 mm (1")
7. Above adjacent ground, roof or balcony level	300 mm (12")
8. From a surface facing the terminal	600 mm (24")
9. From a terminal facing a terminal	1200 mm (48")
10. From an opening in a car port (e.g. door or window) into dwelling	1200 mm (48")
11. Vertically from a terminal on the same wall	1500 mm (60")
12. Horizontally from a terminal on the wall	300 mm (12")

4. Where the lowest part of the terminal is fitted less than 2m (6'6") above a balcony, above ground or above a flat roof to which people have access, then the terminal MUST be protected by a purpose designed guard. The minimum spacing in Table 3, Nos. 2, 3, 4, 5 and 6 would be 75mm, in order to allow a terminal guard to be fitted.

   Terminals guards are available from boiler suppliers - ask for Tower Flue Guard, Model K1. In case of difficulty seek advice from:

   Tower Flue Components Ltd.,
   Vale Rise, Tonbridge, Kent TN9 1TB
   Telephone No. 01732 351 555.

   Ensure that the guard is fitted centrally.

5. Where the terminal is fitted within 850mm (34") of a plastic or painted gutter or 450mm (18") of painted eaves then an aluminium shield at least 750mm (30") long should be fitted to the underside of the gutter or painted surface.
6. The air inlet/products outlet duct and the terminal of the boiler MUST NOT be closer than 25mm (1") to combustible material. Detailed recommendations on the protection of combustible material are given in BS. 5440: 1990.
7. Where it is essential that the terminal wall plate is fitted, i.e. wall thicknesses over 610mm (24") or with an inaccurately cut hole, the minimum spacing in Table 3, Nos. 2, 3, 4, 5 and 6 would be 60mm (2.4") in order to allow the terminal wall plate to be fitted.

IMPORTANT. It is absolutely ESSENTIAL to ensure, in practice, that products of combustion discharging from the terminal cannot re-enter the building or any other adjacent building through ventilators, windows, doors, other sources of natural air infiltration, or forced ventilation / air conditioning.

If this should occur the appliance MUST be turned OFF, labelled as 'unsafe' and corrective action taken.

TERMINAL

The terminal assembly can be adapted to accommodate various wall thicknesses. Refer to Frame 11 - Unpacking.

AIR SUPPLY

It is NOT necessary to have a purpose-provided air vent in the room or internal space in which the boiler is installed. Neither is it necessary to ventilate a cupboard or compartment in which the boiler is installed, due to the low surface temperatures of the boiler casing during operation; therefore the requirements of BS 6798, Clause 12, and BS 5440:2 may be disregarded.

WATER CIRCULATION SYSTEM

The boiler must NOT be used for direct hot water supply. For the types of system and correct piping procedure see Frames 1, and 3 to 8.

The central heating system should be in accordance with BS. 6798 and, in addition, for smallbore and microbore systems, BS. 5449.

WATER TREATMENT - see Frame 9

The hot water storage cylinder MUST be of the indirect type and should preferably be manufactured of copper.

Single feed, indirect cylinders are not recommended and MUST NOT be used on sealed systems.

The appliances are NOT suitable for gravity central heating nor are they suitable for the provision of gravity domestic hot water.

The hot water cylinder and ancillary pipework, not forming part of the useful heating surface, should be lagged to prevent heat loss and any possible freezing - particularly where pipes run through roof spaces and ventilated underfloor spaces.

The boiler must be vented.

Draining taps MUST be located in accessible positions, which permit the draining of the whole system - including the boiler and hot water storage vessel. They should be at least 1/2" BSP nominal size and be in accordance with BS. 2879.

The boiler is fitted with a special drain plug which is provided to drain the BOILER ONLY in the event of the system drain plug being unable to do so.

The hydraulic resistance of the boilers, at MAXIMUM OUTPUT, with an 11 °C (20 °F) temperature differential, is shown in Table 4.

Table 4 - Water flow rate and pressure loss

Boiler size		SE30FF	SE40FF	SE50FF	SE60FF	SE70FF	SE80FF
Boiler	kW	8.8	11.7	14.7	17.6	20.5	23.4
Output	Btu/h	30,000	40,000	50,000	60,000	70,000	80,000
Water Flow	l/sec	0.19	0.25	0.32	0.38	0.44	0.51
Rate	gpm	2.5	3.3	4.2	5.0	5.8	6.7
Pressure	kPa	4.2	6.7	10.0	13.7	11.2	13.7
Loss	m	0.4	0.7	1.0	1.4	1.2	1.4
	ft	1.4	2.3	3.3	4.6	3.8	4.6

THERMOSTATIC RADIATOR VALVES (TRV)

Caradon Plumbing Ltd. recommend that heating systems utilising full thermostatic radiator valve control of temperature in individual rooms should also be fitted with a room thermostat controlling the temperature in a space served by radiators not fitted with such a valve as stated in BS. 5449.

When thermostatic radiator valves are used, the space heating temperature control over a living area having a heating requirement of at least 60% of the boiler heat output should be achieved using a room thermostat whilst other rooms are individually controlled by thermostatic radiator valves. A higher proportion of TRVs may be used, provided that a bypass between the boiler flow and return is fitted, to ensure adequate flow when all TRVs are closed - however this is NOT recommended as a large proportion of TRVs can restrict water circulation and inhibit the condensing mode of condensing boilers, reducing fuel economy.

For further information refer to the 'Good Practice Guide 143', publication of the Energy Efficiency Office, available from the Building Research Establishment, Garston, Watford WD2 7JR. Tel: 01923 664 258

ELECTRICAL SUPPLY

Wiring external to the appliance MUST be in accordance with the current I.E.E. (BS.7671) Wiring Regulations and any local regulations which apply.

The point of connection to the mains should be readily accessible and adjacent to the boiler, except for bathroom installations where the point of connection to the mains MUST be situated outside of the bathroom.

Note. *Where a room sealed appliance is installed in a room containing a bath or shower then the appliance and any electrical switch or appliance control utilising mains electricity should be so situated that it cannot be touched by a person using the bath or shower. See Frame 34 for details.*

CONDENSATE DRAIN. Refer to Frame 44

A condensate drain is provided on the boiler. This drain must be connected to a drainage point on site. All pipework and fittings in the condensate drainage system MUST be made of plastic - *no other materials may be used.*

IMPORTANT.

Any external runs must be insulated

The drain outlet on the boiler is standard 3/4" (22 mm) overflow pipe.

3 OPEN VENT SYSTEM REQUIREMENTS

all dimensions in mm (in.)

The system should be vented directly off the boiler flow pipe, as close to the boiler as possible. The cold feed entry should be inverted and MUST be positioned between the pump and the vent, and not more than 150mm (6") away from the vent connection.

Note. *Combined feed and vent pipes may also be fitted.*

There should be a minimum height, 450mm (18"), of open vent above the cistern water level. If this is not possible refer to Frame 5**.** The vertical distance between the highest point of the system and the feed/expansion cistern water level MUST not be less than 450 mm (18"). The pump must be fitted on the flow side of the boiler.

A suitable pump is a domestic circulator capable of providing a maximum 11°C (20°F) temperature differential across the boiler with the whole of the heating circuit open (e.g. Grundfos UPS 15/50, 15/60 or equivalent). With the minimum flow circuit allowed by the controls the differential must not exceed 15 °C.

The vertical distance between the pump and feed/expansion cistern MUST comply with the pump manufacturer's minimum requirements, to avoid cavitation. Should these conditions not apply either lower the pump position or raise the cistern above the minimum requirement specified by **Caradon Plumbing Ltd.** The isolation valves should be fitted as close to the pump as possible.

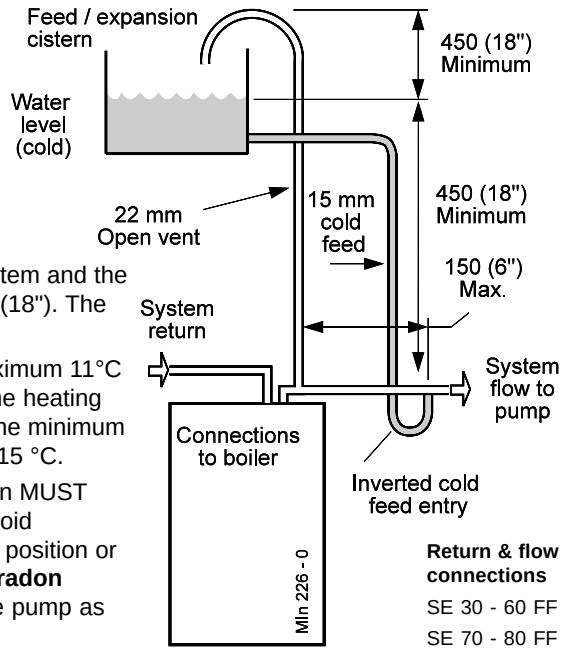

Return & flow connections

SE 30 - 60 FF = 22 mm

SE 70 - 80 FF = 28 mm

4 SCHEMATIC PIPEWORK AND SYSTEM BALANCING

The boiler does not normally need a bypass but at least some radiators on the heating circuit, of load at least 60% of the boiler output, must be provided with twin lockshield valves so that this minimum heating load is always available (see footnote re. thermostatic radiator valves).

Balancing

1. Set the timer to ON for both CH and HW. Turn the cylinder thermostat down. Close the manual or thermostatic valves on all radiators, leaving the twin lockshield valves (on the radiators referred to above) in the open position. Turn up the room thermostat and adjust these lockshield valves to give boiler flow and return temperatures not more than 15°C apart. These valves should now be left as set.

2. Open all manual or thermostatic radiator valves and adjust the lockshield valves on remaining radiators to give around 11°C temperature drop at each radiator.

3. Turn up the cylinder thermostat and adjust the cylinder balancing valve so that the cylinder achieves a maximum flow consistent with adequate flow to the radiators. Check that with only the domestic hot water loop in circuit a differential temperature of 15 °C across the boiler is not exceeded.

4. Adjust room and cylinder thermostats and timer to NORMAL settings.

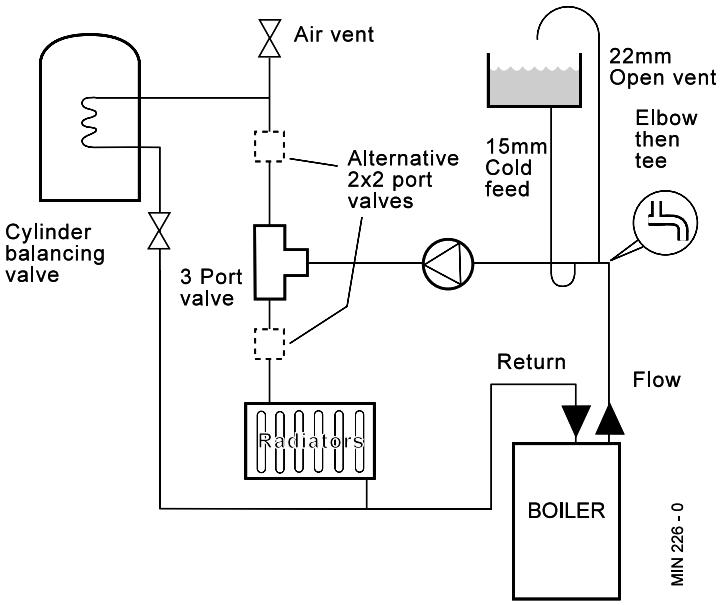

Thermostatic Radiator Valves

Caradon Plumbing Ltd. support the recommendations made in BS. 5449, and by leading manufacturers of domestic heating controls, that heating systems utilising the thermostatic radiator valve control of temperature in individual rooms shall also be fitted with a room thermostat, controlling the temperature in a space served by radiators not fitted with such a valve.

Such an arrangement will provide for potentially more efficient control of the environment and will also avoid the continuous running of the circulation pump during programmed heating ON periods - thus saving electrical energy.

It is, therefore, strongly recommended that, when thermostatic radiator valves are used, space heating temperature control over a living/dining area or a hallway having a heating requirement of at least 60% of the boiler heat output, is achieved using a room thermostat whilst other rooms are individually controlled by thermostatic radiator valves.

5 LOW HEAD AND LARGE SYSTEMS WITH EXTENSIVE PIPE RUNS - OPEN VENT

This arrangement is useful for large systems where radiators at the extremities are difficult to vent. This can lead to pumping over with conventional feed and vent arrangements.

The following conditions MUST be observed:

1. The top of the automatic air vent must be below the cold water level.
2. The static water level (cold) must be at least 200mm above the top of the horizontal flow pipe, fitted as shown. The vent connection MUST NOT be made immediately off the top of the boiler as venting is made less efficient.
3. The maximum practical length of 22mm cold feed pipe should be used in order to reduce the effective volume of hot system water expanding into the feed/expansion cistern to a minimum.

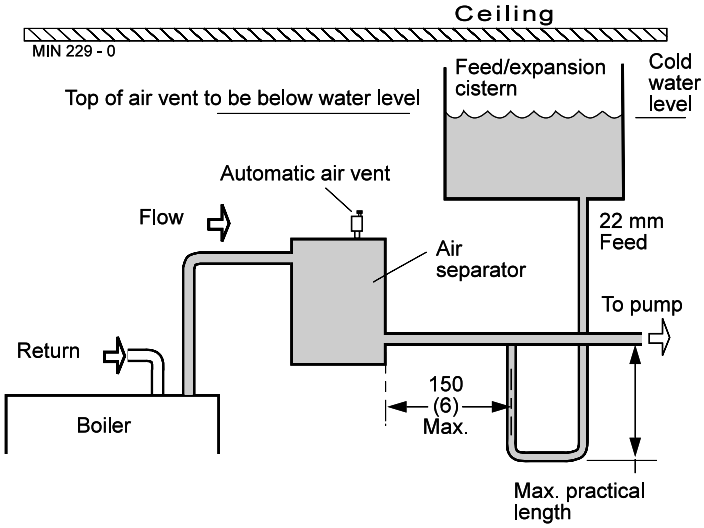

All dimensions in mm (in.).
NB. Imperial dimensions are approximate

Note. *The pump manufacturers' minimum requirements must be complied with.*

6 SEALED SYSTEM REQUIREMENTS

Note. The *method of filling, refilling, topping up or flushing sealed primary hot water circuit from the mains via a temporary hose connection is only allowed if acceptable to the local water authority.*

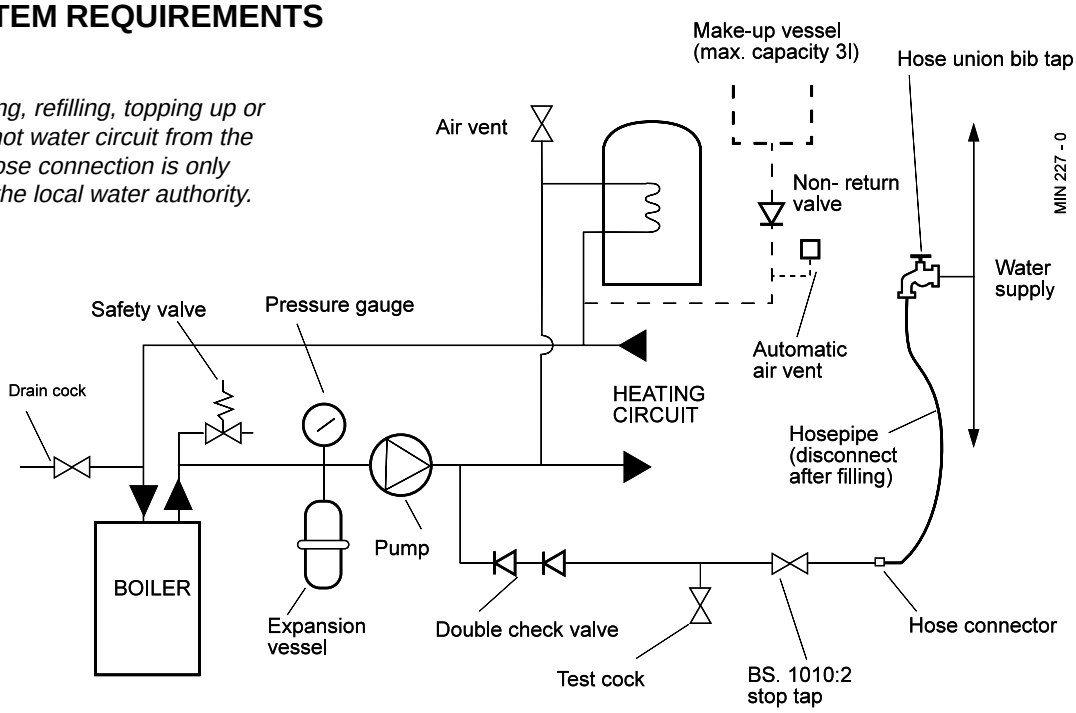

1. General

a. The installation must comply with the requirements of BS. 6798 and BS. 5449.

b. The installation should be designed to work with flow temperatures of up to 82° C.

c. All components of the system, including the heat exchanger of the indirect cylinder, must be suitable for a working pressure of 3 bar (45lb/in^2) and temperature of 110°C. Care should be taken in making all connections so that the risk of leakage is minimised.

2. Safety Valve

A spring loaded safety valve complying with the relevant requirements of BS. 6759 must be fitted in the flow pipe as close to the boiler as possible and with no intervening valve or restriction. The valve should have the following features:

a. A non-adjustable preset lift pressure not exceeding 3bar (45lb/in^2).

b. A manual testing device.

c. Provision for connection of a discharge pipe. *The valve or discharge pipe should be positioned so that the discharge of water or steam cannot create a hazard to the occupants of the premises or cause damage to electrical components and wiring.*

3. Pressure Gauge

A pressure gauge covering at least the range 0-4 bar (0-60 lb/in^2) must be fitted to the system. The gauge should be easily seen from the filling point and should preferably be connected at the same point as the expansion vessel.

7 SEALED SYSTEM REQUIREMENTS - *continued*

4. Expansion Vessel

a. A diaphragm type expansion vessel must be connected to a point close to the inlet side of the pump, the connecting pipe being not less than 15 mm (1/2" nominal) size and not incorporating valves of any sort.

b. The vessel capacity must be adequate to accept the expansion of the system water when heated to 110° C (230° F).

c. The charge pressure must not be less than the static water head above the vessel. The pressure attained in the system when heated to 110° C (230° F) should be at least 0.35 bar (5 lb/in^2) less than the lift pressure of the safety valve.
For guidance on vessel sizing refer to the table in Frame 8.

For further details refer to BS. 5449, BS. 7074:1 and the British Gas Corporation publication 'Material and Installation Specifications for Domestic Central Heating and Hot Water'.

5. Cylinder

The cylinder must be either of the indirect coil type or a direct cylinder fitted with an immersion calorifier which is suitable for operating on a gauge pressure of 0.35 bar (5 lb/in^2) in excess of the safety valve setting. Single feed indirect cylinders are not suitable for sealed systems.

6. Make-up Water

Provision must be made for replacing water loss from the system, either:

a. From a manually filled make-up vessel with a readily visible water level. The vessel should be mounted at least 150 mm (6") above the highest point of the system, and be connected through a non-return valve to the system, fitted at least 300 mm (12") below the make-up vessel on the return side of the domestic hot water cylinder or radiators.

or

b. Where access to a make-up vessel would be difficult by pre-pressurisation of the system. Refer to 'Filling', below.

7. Mains Connection

There must be no direct connection to the mains water supply or to the water storage tank supplying domestic water, even through a non-return valve, without the approval of the local water authority.

8. Filling

The system may be filled by one of the following methods:

a. Through a cistern, used for no other purposes, via a ball valve permanently connected directly to a service pipe and/or a cold water distributing pipe.

The static head available from the cistern should be adequate to provide the desired initial system design pressure. The cold feed pipe from the cistern should include a non-return valve and a stop valve with an automatic air vent connected between them, the stop valve being located between the system and the automatic air vent. The stop valve may remain open during normal operation of the system if automatic water make-up is required.

b. Through a self-contained unit comprising a cistern, pressure booster pump (if required) and, if necessary, an automatic pressure reducing valve and flow restrictor. The cistern should be supplied through a temporary connection from a service pipe or cold water distributing pipe.
This unit may remain permanently connected to the heating system to provide limited automatic water make-up. Where the temporary connection is supplied from a service pipe or distributing pipe which also supplies other draw-off points at a lower level then a double check valve shall be installed upstream of the draw-off point.

c. Through a temporary hose connection from a draw-off tap supplied from a service pipe under mains pressure. Where the mains pressure is excessive a pressure reducing valve shall be used to facilitate filling.

The following fittings shall form a permanent part of the system and shall be fitted in the order stated:

A stop valve complying with the requirements of BS. 1010, Part 2 (the hose from the draw-off tap shall be connected to this fitting).
A test cock.
A double check valve of an approved type.

- Thoroughly flush out the whole of the system with cold water, without the pump in position.
- With the pump fitted, fill and vent the system until the pressure gauge registers 1.5 bar (21.5lb/in^2). Examine for leaks.
- Check the operation of the safety valve by manually raising the water pressure until the valve lifts. This should occur within ± 0.3 bar (± 4.3lb/in^2) of the pre-set lift pressure.
- Release water from the system until the initial system design pressure is reached.
- Light the boiler and heat the system to the maximum working temperature. Examine for leaks.
- Turn off the boiler and drain the system while still hot.
- Refill and vent the system.
- Adjust the initial pressure to the required value.

Sizing procedure for expansion vessels: The volume of the expansion vessel (litres) fitted to a sealed system shall not be less than that given by the table on the following page, multiplied by a factor of 0.8 (for flow temperatures of less than 83 °C).

8 SEALED SYSTEM REQUIREMENTS - *continued*

Safety valve setting	3.0 bar			2.5 bar			2.0 bar	
Vessel charge and initial system pressure	0.5 bar	1.0 bar	1.5 bar	0.5 bar	1.0 bar	1.5 bar	0.5 bar	1.0 bar
Total water content of system	**Expansion vessel volume litres**							
25 litres	2.1	2.7	3.9	2.3	3.3	5.9	2.8	5.0
50	4.2	5.4	7.8	4.7	6.7	11.8	5.6	10.0
75	6.3	8.2	11.7	7.0	10.0	17.7	8.4	15.0
100	8.3	10.9	15.6	9.4	13.4	23.7	11.3	20.0
125	10.4	13.6	19.5	11.7	16.7	29.6	14.1	25.0
150	12.5	16.3	23.4	14.1	20.1	35.5	16.9	30.0
175	14.6	19.1	27.3	16.4	23.4	41.4	19.7	35.0
200	16.7	21.8	31.2	18.8	26.8	47.4	22.6	40.0
225	18.7	24.5	35.1	21.1	30.1	53.3	25.4	45.0
250	20.8	27.2	39.0	23.5	33.5	59.2	28.2	50.0
275	22.9	30.0	42.9	25.8	36.8	65.1	31.0	55.0
300	25.0	32.7	46.8	28.2	40.2	71.1	33.9	60.0
Multiplying factors for other system volumes	0.0833	0.109	0.156	0.094	0.134	0.237	0.113	0.20

9 WATER TREATMENT

The SE FF boiler has an ALUMINIUM alloy heat exchanger

If water treatment is used **Caradon Plumbing Limited** recommend only the use of FERNOX-COPAL or SENTINEL X100 water treatment products, which must be used in accordance with the manufacturers' instructions. For further information contact:-

Fernox Manufacturing. Co. Ltd,
Tandem House,
Marlowe Way,
Croydon,
Surrey CRO 4XS
Tel 0870 5601 5000

Sentinel Division
Betz Dearborn Ltd.
Widnes
Cheshire
WA8 8UD
0151 424 5351

IMPORTANT.

The application of any other treatment to this product will render the guarantee of Caradon Plumbing Limited invalid.

Notes.

1. It is most important that the correct concentration of the water treatment product is maintained in accordance with the manufacturers' instructions.
2. If the boiler is installed in an existing system any unsuitable additives *MUST* be removed by thorough cleansing. BS. 7593:1992 details the steps necessary to clean a domestic central heating system.
3. In hard water areas, treatment to prevent lime scale may be necessary - however, the use of artificially softened water is *NOT* permitted.
4. Under no circumstances should the boiler be fired before the system has been thoroughly flushed.

10 BOILER ASSEMBLY - Exploded view

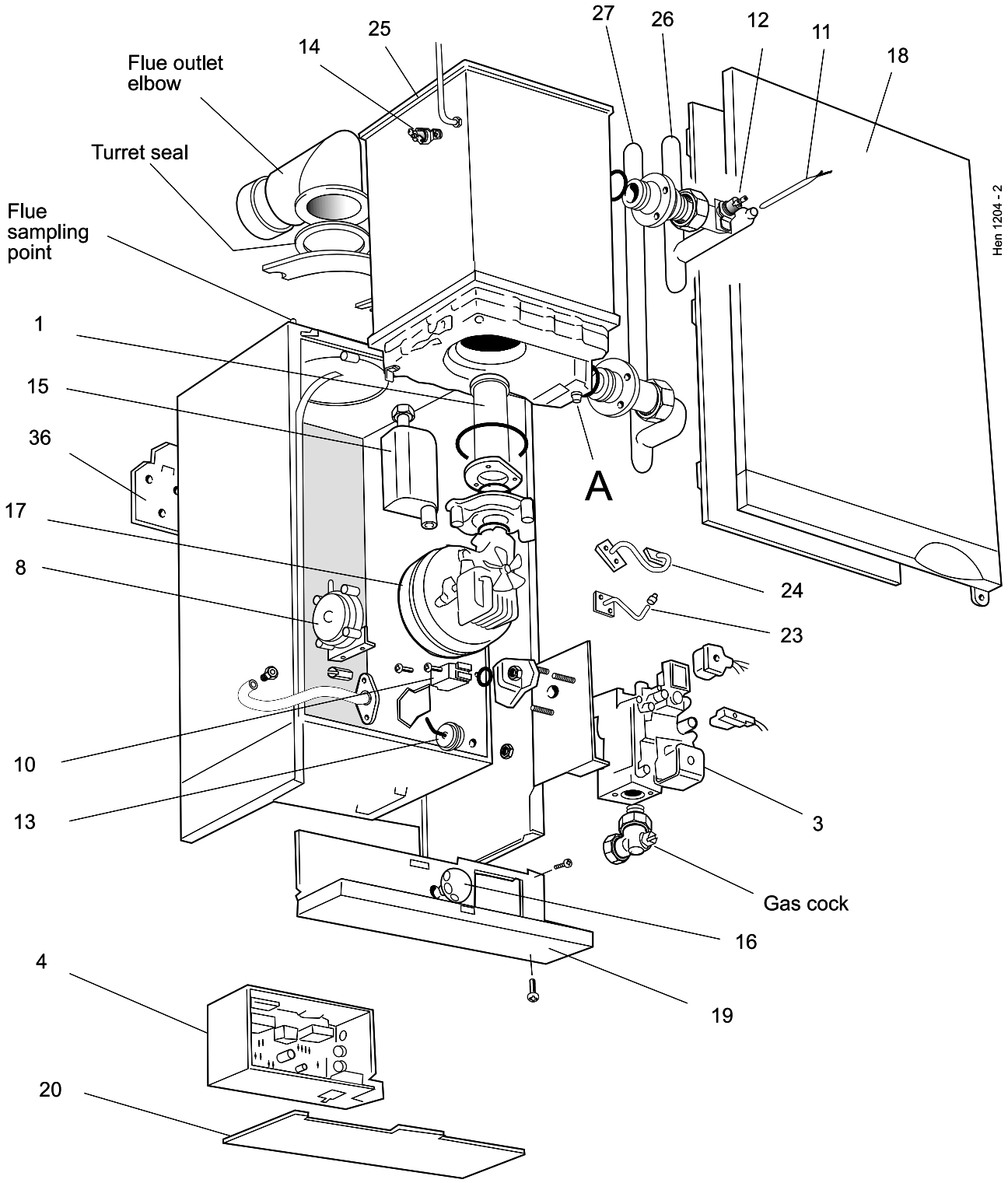

LEGEND

A. Boiler drain point
1. Main burner
3. Gas valve
4. Control box
8. Pressure switch
10. Spark generator
11. Control thermostat
12. Overheat thermostat
13. Dry fire thermostat
14. Flue thermostat
15. Condensate siphon
16. Thermostat knob
17. Fan assembly
18. Front panel
19. Controls door
20. Bottom panel
23. Low pressure sensing pipe
24. Fan pressure sensing pipe
25. Heat exchanger
26. Flow pipe
27. Return pipe
36. Wall mounting plate

11 UNPACKING

The boiler is supplied fully assembled in one pack, together with a standard flue assembly for lengths up to 406mm, rear or side flue outlet, in Pack B2.

Optional extras (Roof Flue Kit, Extension Duct Kit, Flue Elbow Kits), if ordered, are available in separate boxes.

Unpack and check the contents.

Boiler Pack Contents

- Hardware Pack (listed below).
- These Installation & Servicing Instructions.
- The User's Instructions.

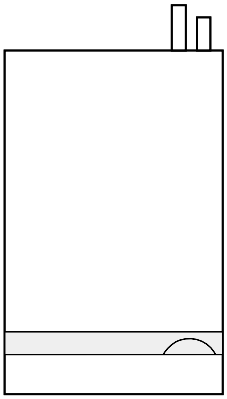

Complete boiler

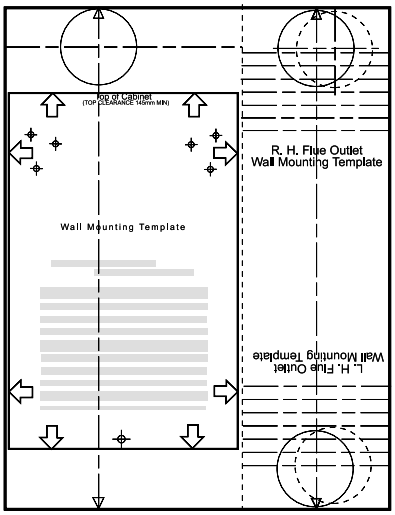

Wall mounting template

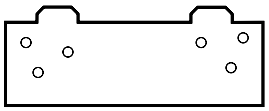

Wall mounting plate

Hardware Pack

- 50mm x No.10 wood screws - 3 off.
- Wall plugs (TP2B) - 3 off.
- Water treatment warning label.
- Condensate drain adaptor.
- Turret clamp and seal.
- 22mm x 28mm flow and return pipe connectors (SE 30 FF to SE 60 FF boilers ONLY).
- M5 x 10 pozi Hex screw.

Pack B2 Contents

No. 8 x 8mm self tapping screws - 2 off.
Flue support cutting aid - 1 off.
No.10 x 2" screws - 4 off.
Rawlplugs - 4 off.

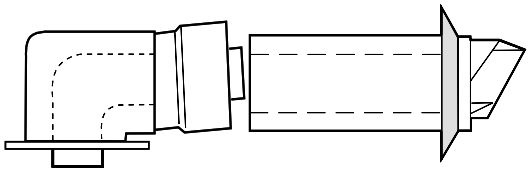

Flue turret assembly

Flue terminal

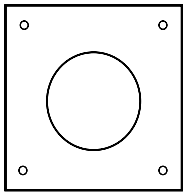

Terminal wall plate

12 PACKAGING AND PANEL REMOVAL

1. Unpack the boiler.

   Note. *The hardware pack and wall mounting plate are within the cardboard infill pieces.*

2. Swing open the controls pod door.
3. Remove the single screw retaining the casing front panel.
4. Lift the front panel upward and forward and place to one side to avoid damage.
5. Close the controls pod door.
6. Remove the boiler from its packaging base.

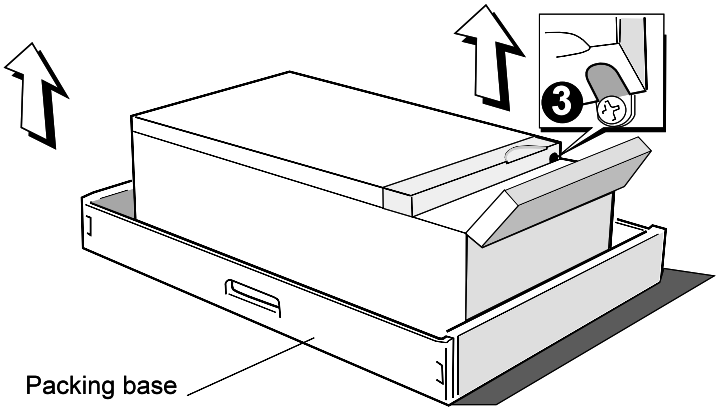

13 BOTTOM PANEL REMOVAL

1. Undo the 3 retaining screws.
2. Push the panel backward then to the right to withdraw it from the boiler.
3. Unpack the boiler flue kit (and extension packs, if used).

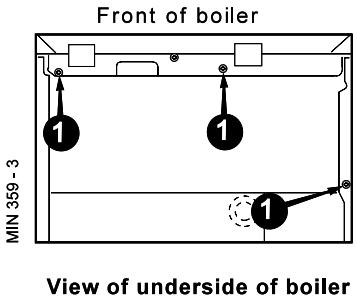

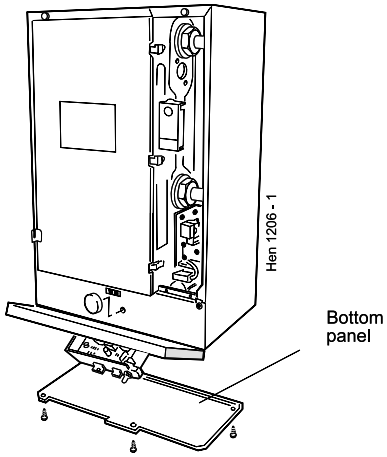

14 DETERMINING THE FLUE LENGTH AND FLUE PACKS REQUIRED

IMPORTANT.

The boiler MUST be installed in a vertical position

Dimension X - Wall thickness

Dimension Y - Wall thickness plus boiler spacing (RHS)

Dimension Z - Wall thickness plus boiler spacing (LHS)

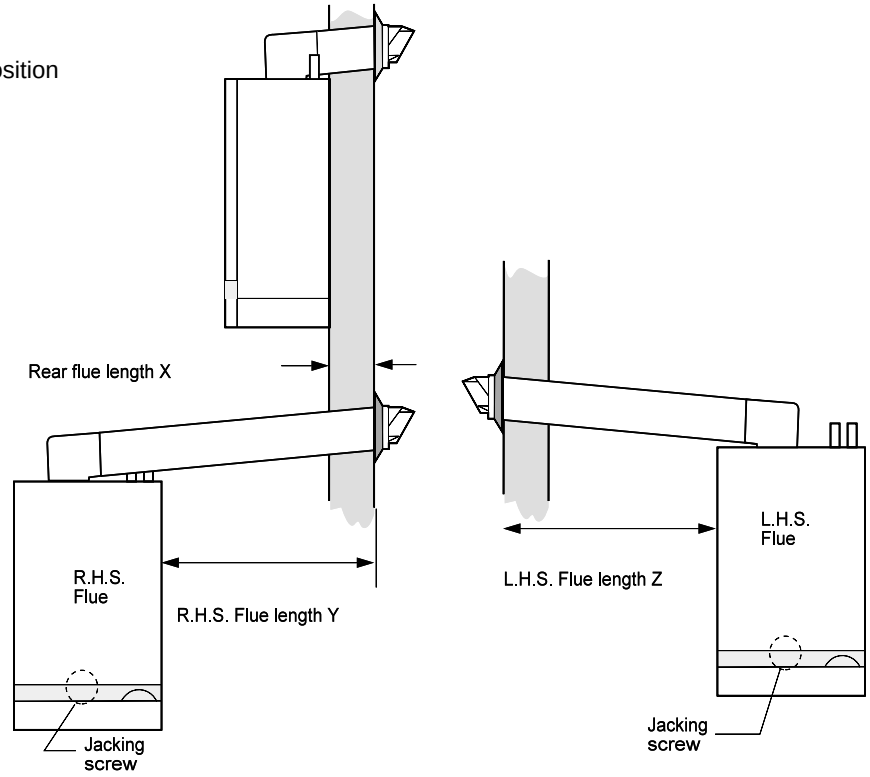

Flue length dimension			Flue
Rear flue dimn. X	**Right hand side flue dimn. Y**	**Left hand side flue dimn. Z**	**packs required**
114 - 580 mm (4 1/2 - 22 3/4")	114 - 460 mm (4 1/2 - 18")	114 - 550 mm (4 1/2 - 21 1/2")	Pack B2, cut down as in Frames 18 & 26
580 - 1530 mm (22 3/4 - 60 1/4")	460 - 1410 mm (18 - 55 1/2")	550 - 1500 mm (21 1/2 - 59")	Pack B2 - 1 off Extn. Duct - 1 off
1530 - 2480 mm (60 1/4 - 97 3/4")	1410 - 2380 mm (55 1/2 - 93")	1500 - 2450 mm (59 - 96 1/2")	Pack B2 - 1 off Extn. Duct - 2 off
2480 - 3000 mm (97 3/4 - 118")	2360 - 3000 mm (93 - 118")	2450 - 3000 mm (96 1/2 - 118")	Pack B2 - 1 off Extn. Duct - 3 off

FLUE KITS

Pack B2 - supplied as standard

Extension duct (1m) - optional extension kit for side flue or rear flue outlet.
Refer to 'Flue Extension Ducts'

Note

The flue duct MUST be inclined at 2.5^0 to the horizontal to allow condensate to drain back into the boiler and out through the condensate drain.

REAR FLUE OUTLET

15 FLUE ASSEMBLY - Exploded View

1. An optional flue duct extension kit is required for wall thicknesses greater than 580mm (22 3/4"). Refer to Frame 14.
2. When cutting the ducts always use the cardboard support cutting aid provided.

LEGEND

1. Terminal.
2. Weather seal.
3. Duct assembly.
4. No. 8 x 8 self tapping screw.
5. Flue Turret.
6. M5 x 10 pozi screw.
7. Turret clamp.
8. Turret seal.

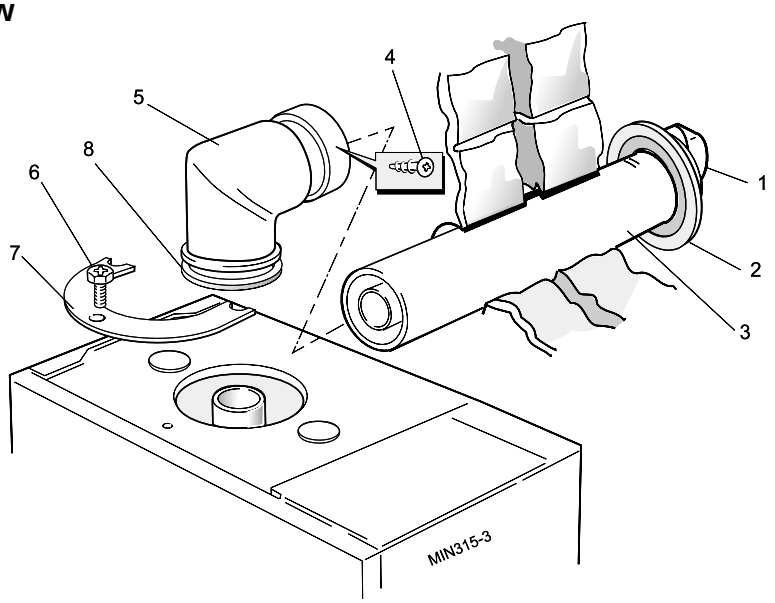

16 WALL MOUNTING TEMPLATE

Note. *The template shows the positions for the fixing holes and the flue hole centres for standard installation.*
Care must be taken to ensure the correct holes are drilled.

1. Separate the templates and discard template B.
2. Tape template into the selected position.
3. Ensure squareness by hanging a plumbline as shown.
4. Mark onto the wall the following:
   - **a** The plate screw positions (choose one from each group) and lower fixing screw position.
   - **b.** The position of the flue duct hole.

   Note. *Mark the centre of the hole as well as the circumference*
5. Remove the template from the wall.

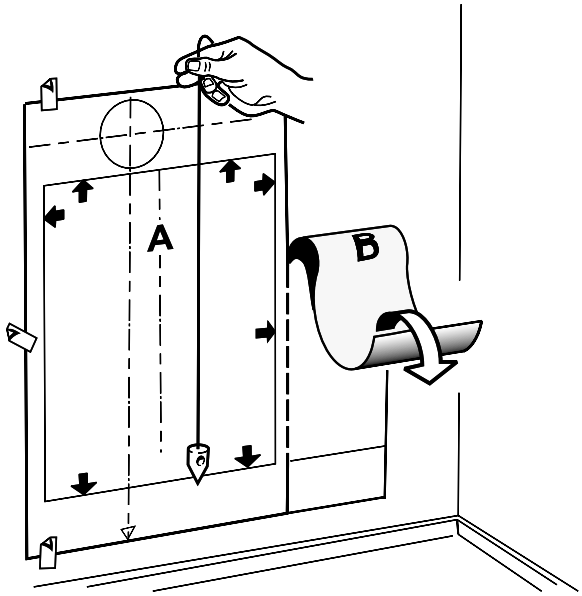

17 PREPARING THE WALL

IMPORTANT. Ensure that, during the cutting operation, masonry falling outside of the building does not cause damage or personal injury.

1. Cut the flue hole (preferably with a 5" core boring tool), ensuring that the hole is square to the wall.
   Both wall faces immediately around the cut hole should be flat.
2. Drill 3 holes with a 7mm (1/4") masonry drill and insert the plastic plugs provided, for the wall mounting plate and the jacking screw plate.
3. Locate two No.10 x 2" screws in the wall mounting plate (one at each side, in any of the 3 holes provided at each side) and screw home.

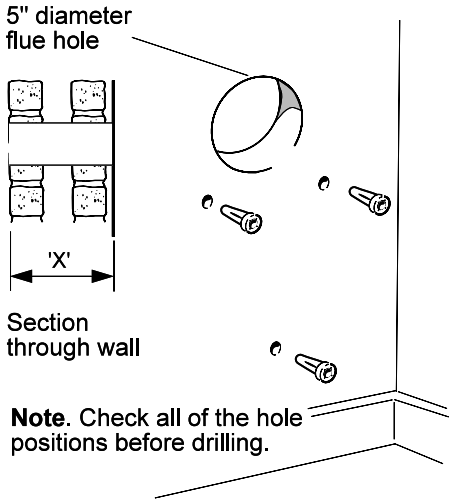

Note. Check all of the hole positions before drilling.

Note. *If the terminal is to be sited within 25-40mm of a corner or vertical pipe (refer to Table 3) then the hole MUST be accurately cut and the rubber weather seal trimmed around the groove provided.*
The terminal wall plate need not be fitted.

18 CUTTING THE FLUE **Wall thicknesses of 114 to 580mm**

1. Measure and note wall thickness X.
2. Add 15mm (5/8") to dimension X and, measuring from the groove, cut the tube.
3. To ensure the tube is cut square, mark the flue all the way round.
4. Cut to length, using the cardboard support aid.
5. Remove the cardboard support and any burrs.

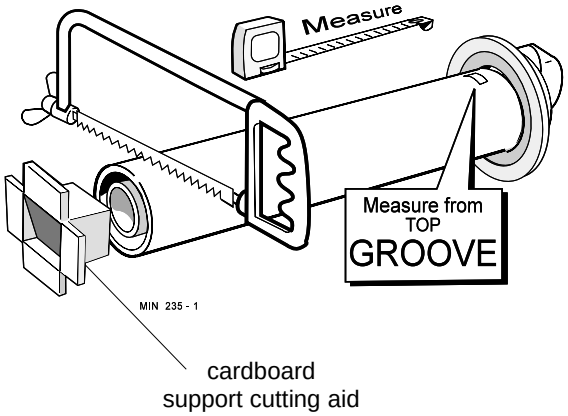

19 ASSEMBLING THE FLUE

1. Fit the 'cut to length' flue on to the flue turret.
   Note. *Ensure the top groove in the flue aligns with the top of the turret.*
2. Drill a 3.2mm dia. hole through the flue via the hole present in the turret.
3. Secure the turret to the flue, using the self tapping screw provided.

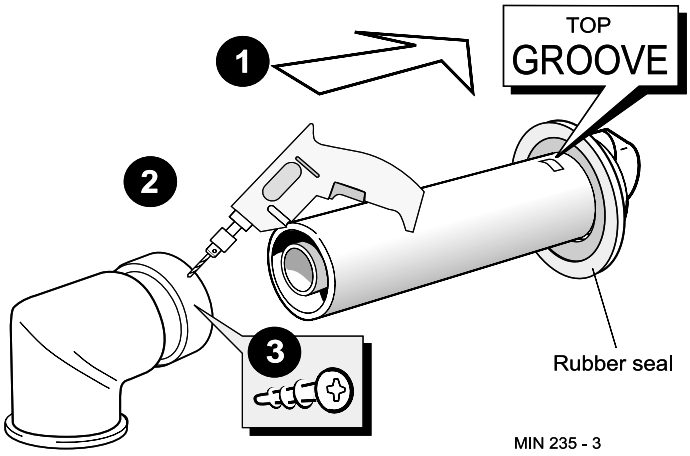

20 MOUNTING THE BOILER

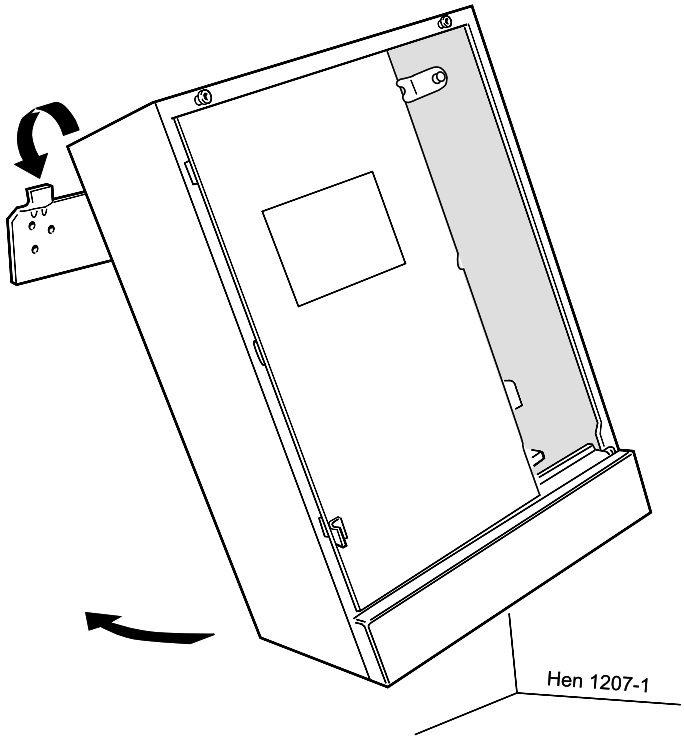

1. Lift the boiler onto the wall mounting plate, as shown.
2. Check the boiler alignment, using a spirit level, and adjust as necessary with the jacking screw.
3. Align the hole in the jacking plate with the pre-drilled hole in the wall and fix in position with the No.10 x 2" screw provided.

REAR FLUE OUT-

21 CONNECTING THE FLUE TO THE BOILER

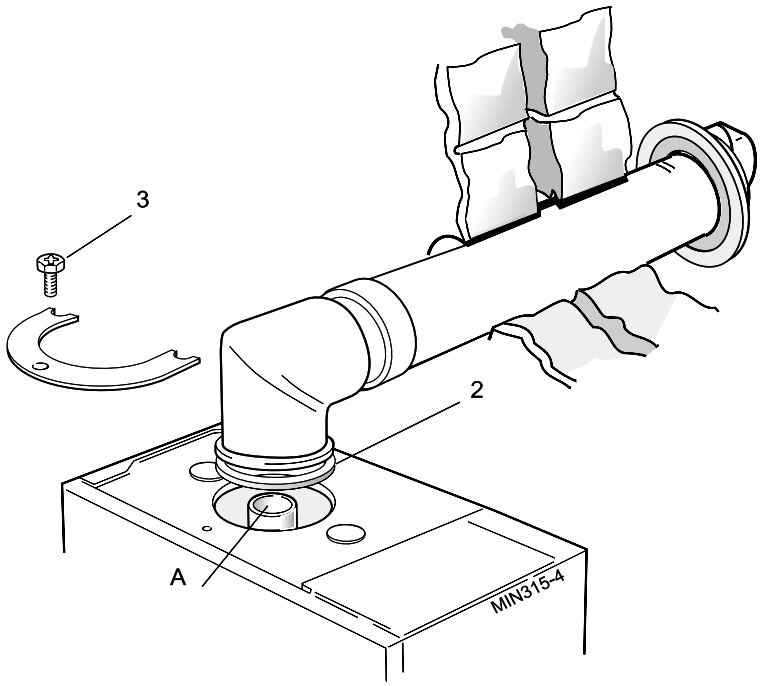

Note. *BEFORE fitting the flue turret, fill the condensate siphon within the boiler by pouring a cupful of water into the flue outlet A.*

1. Insert the flue assembly through the prepared hole in the wall far enough to allow the rubber seal to unfold completely and form an adequate seal on the outside wall.
2. Pull the flue back and locate the flue turret on the top of the boiler, ensuring that the seal is in place.
3. Secure the flue turret on top of the boiler by inserting the open ends of the turret clamp under the 2 studs and fixing it in the middle with the single M5 x 10mm pozi-hex screw provided.
4. Now make good the inside wall face around the flue.

22 TERMINAL WALL PLATE

This plate allows neat concealment and full compression of the rubber seal. Its use is not essential if the flue hole and flue ducts have been accurately cut and the outside wall face is flat.

1. Position the terminal wall plate over the terminal.
2. Drill 4 fixing holes with a 7mm (1/4") masonry drill.
3. Insert the 4 plastic plugs provided.
4. Secure the plate with 4 of the No.10 x 2" screws provided.

Note. *If the terminal is less than 2m (6' 6") above ground level, an approved terminal guard should be fitted.*
Refer to 'Flue Installation', Page 7.

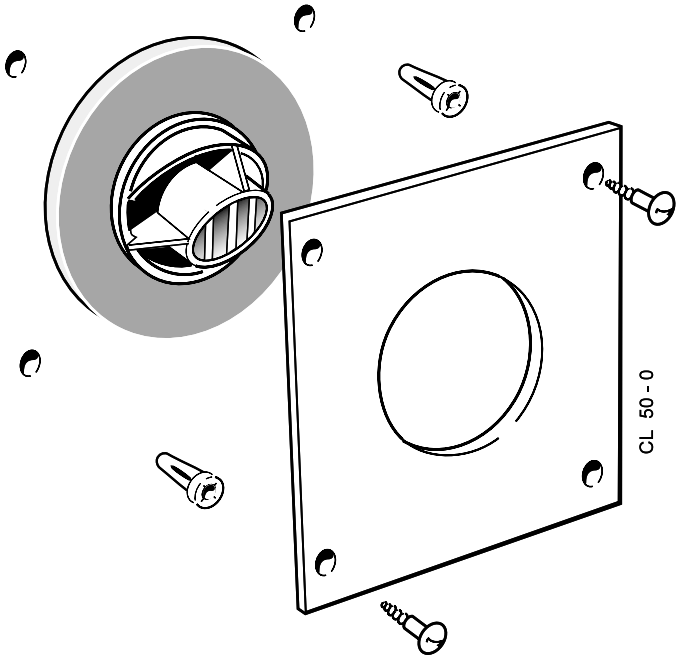

PROCEED TO FRAME 34

23 FLUE ASSEMBLY - Exploded view

1. An optional flue duct extension kit is required for wall thicknesses greater than :

460 mm (18") for **RHS** flue

550 mm (21 1/2") for **LHS** flue

(see Frame 14).

2. When cutting the ducts always use the cardboard support cutting aid provided.

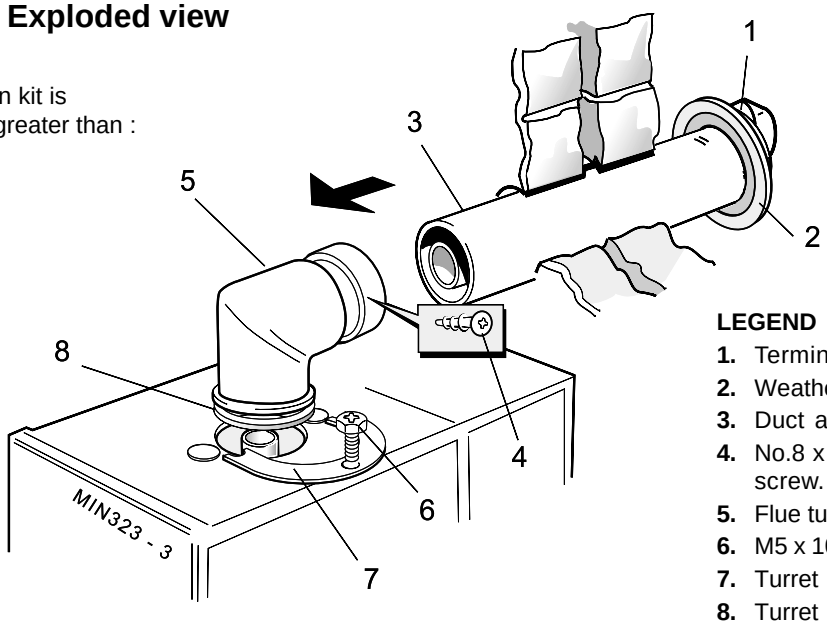

LEGEND

1. Terminal.
2. Weather seal.
3. Duct assembly.
4. No.8 x 8 self tapping screw.
5. Flue turret.
6. M5 x 10 pozi-hex screw.
7. Turret clamp.
8. Turret seal.

24 WALL MOUNTING TEMPLATE

Note.
The template shows the positions for the fixing holes and the flue hole centres. Care MUST be taken to ensure the correct holes are drilled.

1. Separate the templates.
2. Tape both templates into the selected position, locating template B through an extended centre line as shown - ensure that it is the right way up for the flue hand required.
3. Ensure squareness by hanging a plumbline as shown.
4. Mark onto the wall the following:
   - **a** The two wall mounting plate screw positions (choose one from each group) and the jacking screw position.
   - **b.** The position of the flue duct hole (see diagram below, and template)

   Note.
   Mark the centre of the hole as well as the circumference
5. Remove both templates from the wall.

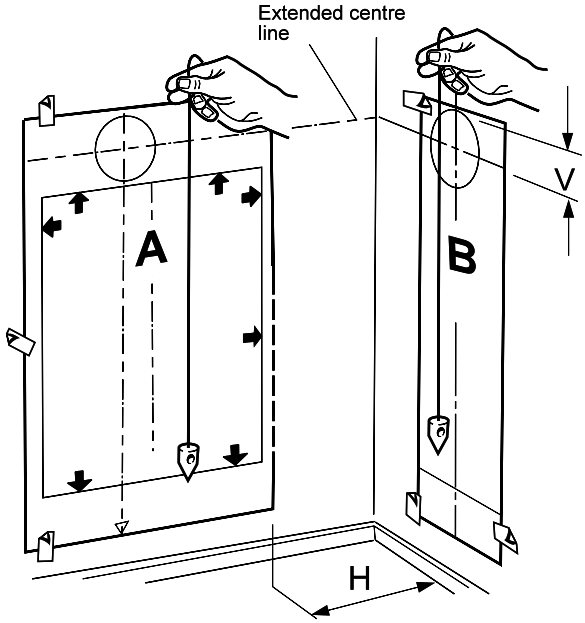

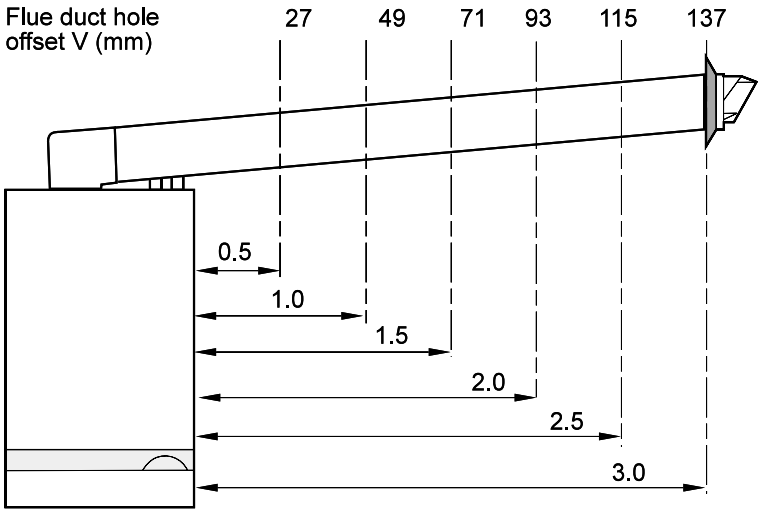

Distance in metres from side of boiler to side wall H (m)

25 PREPARING THE WALL

IMPORTANT. Ensure that, during the cutting operation, masonry falling outside of the building does not cause damage or personal injury.

1. Cut the flue hole (preferably with a 5" core boring tool), ensuring that the hole is square to the wall. Both wall faces immediately around the cut hole should be flat.
2. Drill 3 holes with a 7mm (1/4") masonry drill and insert the plastic plugs, provided, for the wall mounting plate and the jacking screw plate.

   Note. *If the terminal is to be sited within 25-40mm of a corner or vertical pipe (refer to Table 3) then the hole MUST be accurately cut and the rubber weather seal trimmed around the groove provided. The terminal wall plate need not be fitted.*
3. Locate 2 of the No.10 x 2" screws in the wall mounting plate (1 at each side, in any of the 3 holes provided at each side) and screw home.

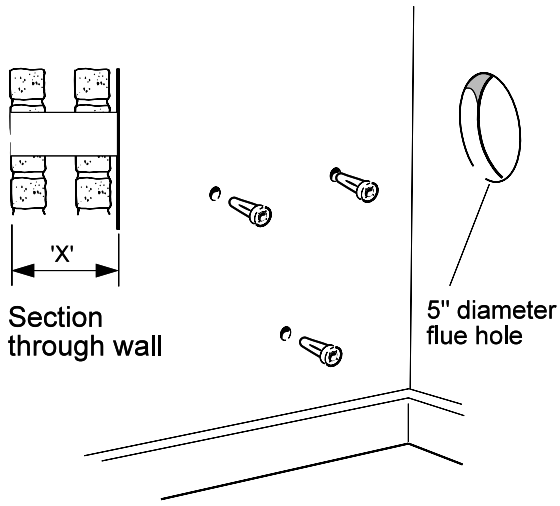

26 CUTTING THE FLUE - For flue lengths 114 to 600mm *ONLY*

1. The flue cut length is calculated as follows:-
   - **a.** Measure and note the wall thickness X
   - **b.** Add dimension H, measured in Frame 24.
   - **c.** For right hand side flue add 132mm (5 3/16")
   - **d.** For left hand side flue add 48mm (1 7/8")

     i.e. for RHS X + H + 132mm (5 3/16")
     for LHS X + H + 48mm (1 7/8")
2. Measure from the groove and cut the tube.
3. To ensure the tube is cut square, mark the flue all the way round.
4. Cut to length, using the cardboard support aid.
5. Remove the cardboard support and remove any burrs.

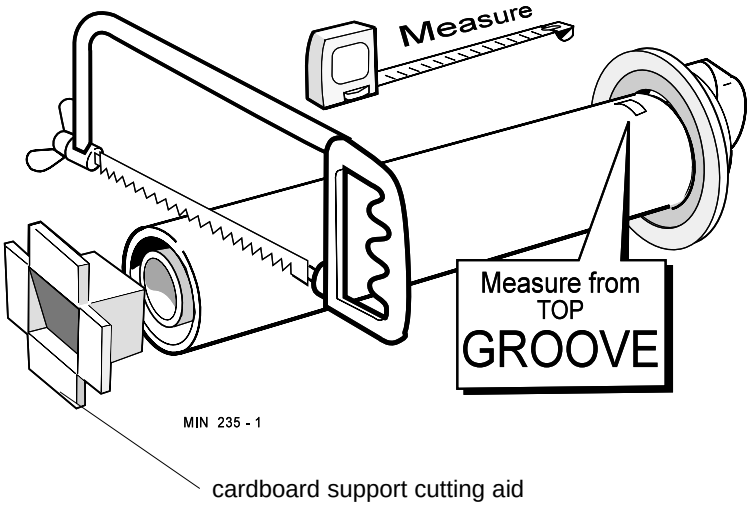

FOR FLUE LENGTHS GREATER THAN 600mm REFER TO FRAMES 31, 32 & 33 - FLUE EXTENSION DUCTS

27 ASSEMBLING THE FLUE

1. Fit the 'cut to length' flue on to the flue turret.

   Note. *Ensure the groove in the flue aligns with the top of the turret.*
2. Drill a 3.2mm dia. hole through the flue via the hole already present in the turret.
3. Secure the turret to the flue, using the self tapping screw provided.

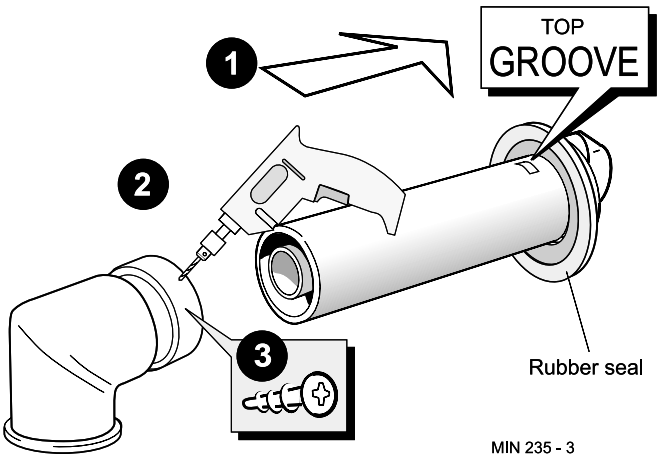

28 MOUNTING THE BOILER

1. Lift the boiler onto the wall mounting plate, as shown.
2. Check the boiler alignment using a spirit level and adjust as necessary with the jacking screw.
3. Align the hole in the jacking plate with the pre-drilled hole in the wall and fix in position with the No.10 x 2" screw provided.

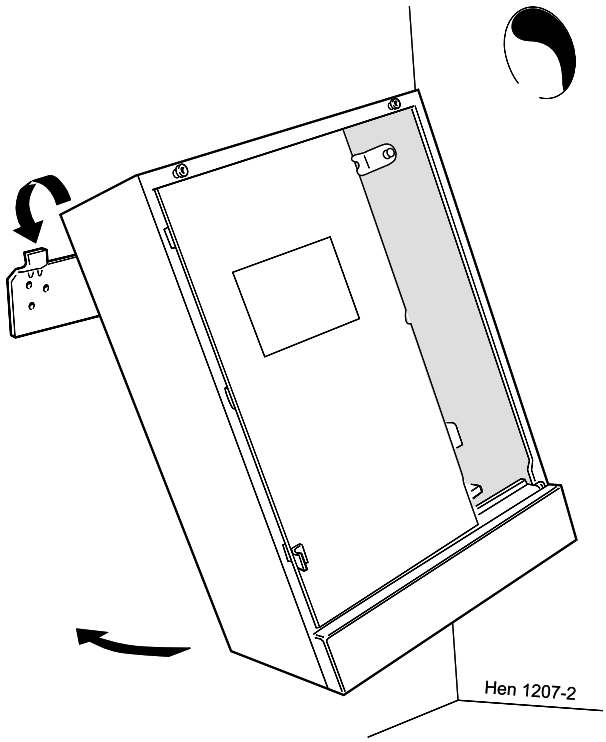

29 CONNECTING THE FLUE TO THE BOILER

Note. *BEFORE fitting the flue turret, fill the condensate siphon within the boiler by pouring a cupful of water into the flue outlet A.*

1. Insert the flue assembly through the prepared hole in the wall far enough to allow the rubber seal to unfold completely and form an adequate seal on the outside wall.
2. Pull the flue back and locate the flue turret on the top of the boiler, ensuring that the seal is in place.
3. Secure the flue turret on top of the boiler by inserting the open ends of the turret clamp under the 2 studs and fixing it in the middle with the single M5 x 10mm pozi-hex screw provided.
4. **Flues over 1 metre long.**
   Fix the flue support bracket to the wall, using the wall plug and wood screw.
   For standard installations use the short wood screw.
5. Now make good the inside wall face around the flue.

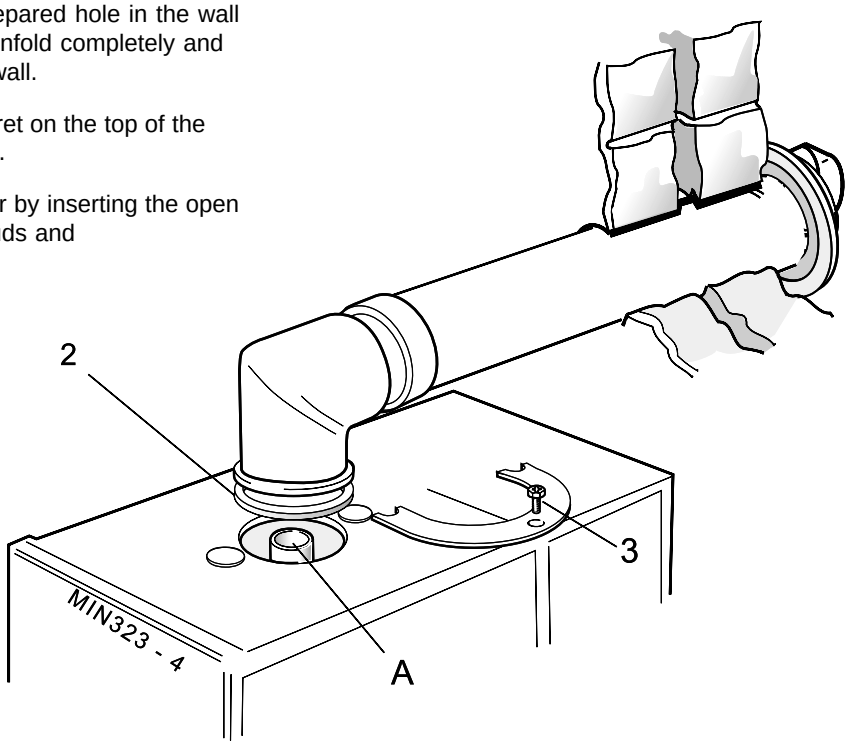

SIDE FLUE OUTLET

30 TERMINAL WALL PLATE

This plate allows neat concealment and full compression of the rubber seal. Its use is not essential if the flue hole and flue ducts have been accurately cut and the outside wall face is flat.

1. Position the terminal wall plate over the terminal.
2. Drill 4 fixing holes with a 7mm (1/4") masonry drill.
3. Insert the 4 plastic plugs provided.
4. Secure the plate with 4 of the No.10 x 2" screws provided.

Note. *If the terminal is less than 2m (6' 6") above ground level, an approved terminal guard should be fitted. Refer to the Flue Installation, Page 7.*

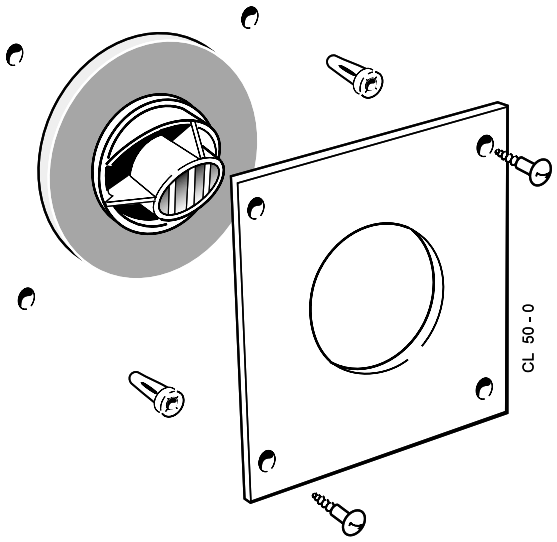

31 FLUE EXTENSION DUCTS - For flue lengths greater than 600mm

FLUE EXTENSION DUCT KIT CONTENTS.

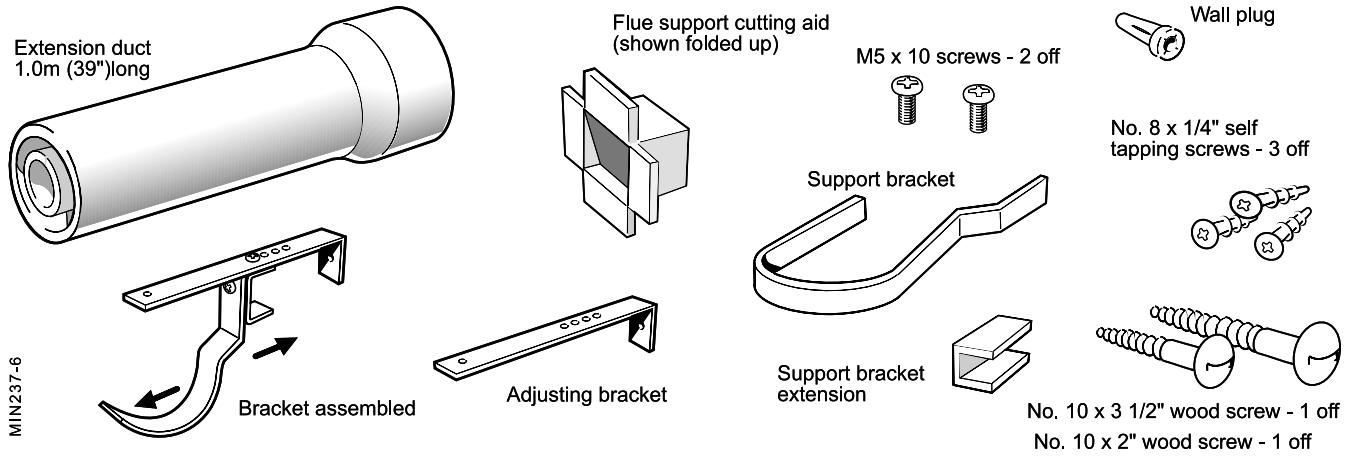

32 FLUE EXTENSION DUCTS - continued

Use a maximum of 3m extended flue ONLY

General arrangement

1. A ***maximum*** of 3 extension ducts (one suitably cut) plus the standard flue duct may be used together.
2. Flue extensions of greater length than 1m (39") should be supported with the bracket provided, suitably adjusted. Refer to Frame 31.

Note. *Side flue shown*

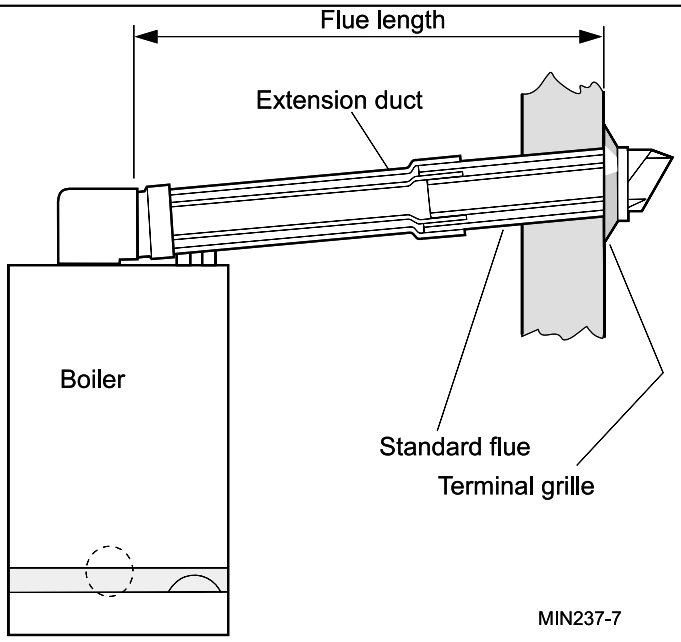

33 FITTING THE KIT

1. Remove the cardboard support aid from the flue and place safely to one side.
2. Fit the inner flue extension duct onto the inner flue duct.
3. Fit the outer flue extension duct onto the outer air duct.
4. Drill one 3.2mm (1/8") dia hole through the outer air duct. ***Do not drill the inner flue duct.***
5. Insert the self tapping screw provided to fix the air duct in position.
6. Repeat steps 1-5 if a second flue extension is required.
7. Measure and mark the flue length required onto the flue, measuring from the groove near the terminal.
8. To ensure a square cut, mark the flue all the way round.
9. Cut to length using the cardboard support aid.
10. Remove the cardboard off-cut and deburr the metal edges.

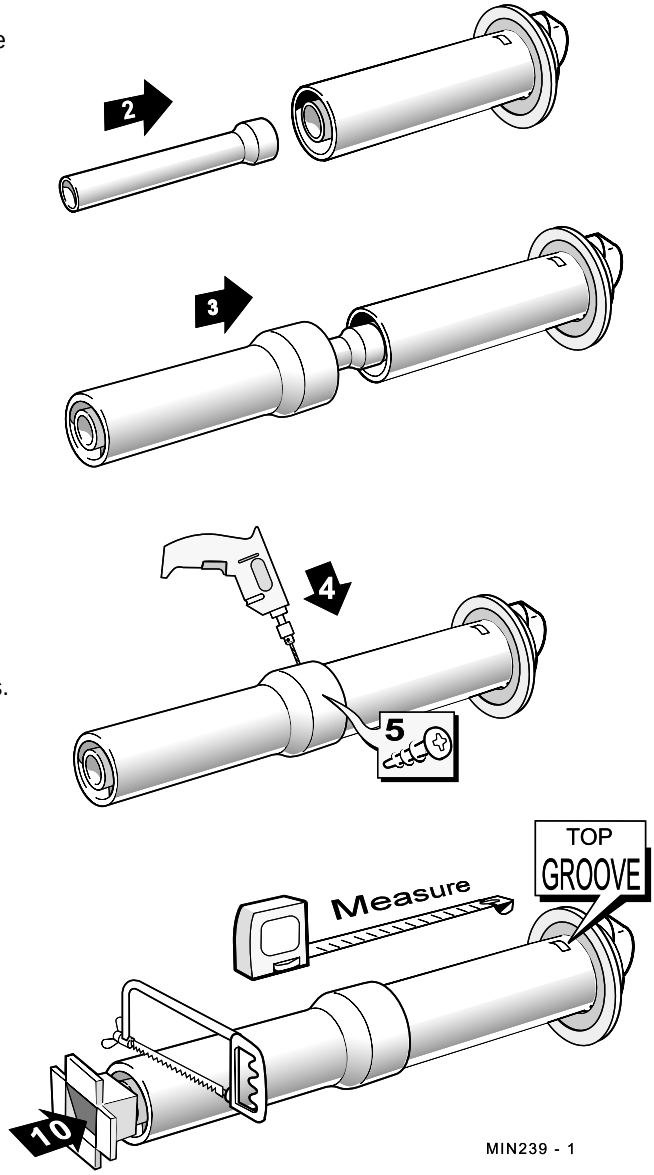

Appliances fitted with a ***REAR*** **outlet flue** : please refer to Frame 19

Appliances fitted with a ***SIDE*** **outlet flue** : please refer to Frame 27

34 ELECTRICAL CONNECTIONS

WARNING. This appliance MUST be efficiently earthed

A mains supply of 230 V ~ 50 Hz is required.

The fuse rating should be 3 A.

All external controls and wiring MUST be suitable for mains voltage. Wiring should be 3 core PVC insulated cable NOT LESS than 0.75 mm^2 (24 x 0.2mm) and to BS. 6500, Table 16.

Wiring external to the boiler MUST be in accordance with the current I.E.E. (BS.7671) Wiring Regulations and any local regulations.

Connection must be made in a way that allows complete isolation of the electrical supply - such as a double pole switch having a 3mm (1/8") contact separation in both poles, or a plug and socket serving only the boiler and system controls. The means of isolation must be accessible to the user after installation.

35 INTERNAL WIRING

Note. *If a timer kit is to be fitted refer to the instructions provided with the kit, and Frame 36.*

A pictorial wiring diagram is shown in Frame 37 .

1. Route the mains cable into the bottom RHS rear of the casing.
2. Swing the terminal strip bracket out.
3. Wire the live and neutral into the terminal strip.
4. Connect the earth wire to the earth post.

   Note. *Ensure that the lengths of the current carrying conductors are shorter than the earth conductor so that if the cable slips in its anchorage the current carrying conductors become taut before the earth conductor.*

5. Secure the mains lead with the cable clamp.
6. Swing the terminal strip bracket back into its working position.

Incoming mains wiring detail

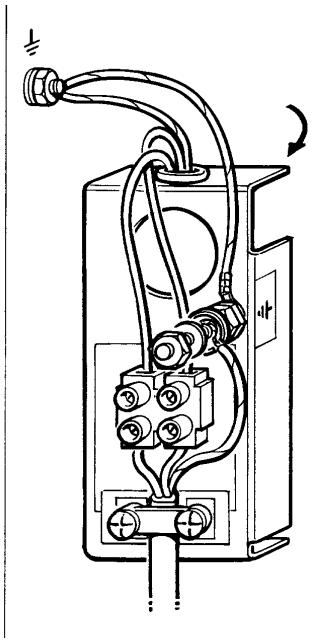

Flow wiring diagram

LEGEND

b	blue	**br**	brown	**w**	white
bk	black	**r**	red	**y**	yellow
		o	orange		

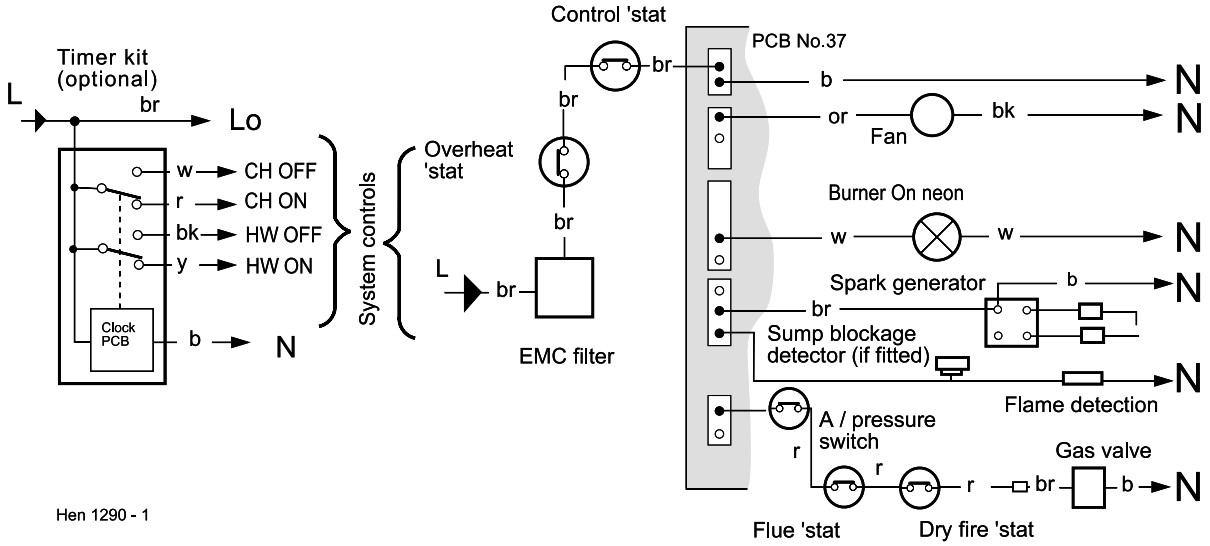

36 EXTERNAL WIRING

External wiring MUST be in accordance with the current I.E.E. (BS.7671) Wiring Regulations.

The wiring diagrams illustrated in Frames 38 to 41 cover the systems most likely to be used with this appliance.

For wiring external controls to the **SE FF** boiler, reference should be made to the systems wiring diagram supplied by the relevant manufacturer in conjunction with the wiring diagrams shown in Frames 38 to 41.

Difficulty in wiring should not arise, providing the following directions are observed:

1. Controls that switch the system on and off, e.g. a time switch, MUST be wired in series, in the live mains lead to the boiler.
2. Controls that override an on/off control, e.g. a frost thermostat, MUST be wired into the mains supply, in parallel, with the controls to be overridden. Refer to Frame 42.
3. If a proprietary system is used, follow the instructions supplied by the manufacturer.
4. The pump must always be wired in parallel with the boiler.
5. SYSTEM DESIGNS FEATURING CONTROLS OR WIRING ARRANGEMENTS WHICH ALLOW THE BOILER TO FIRE WHEN THERE IS NO PUMPED CIRCULATION TAKING PLACE ***MUST NOT BE FITTED***.

Advice on required modifications to wiring may be obtained from the component manufacturers.

37 PICTORIAL WIRING

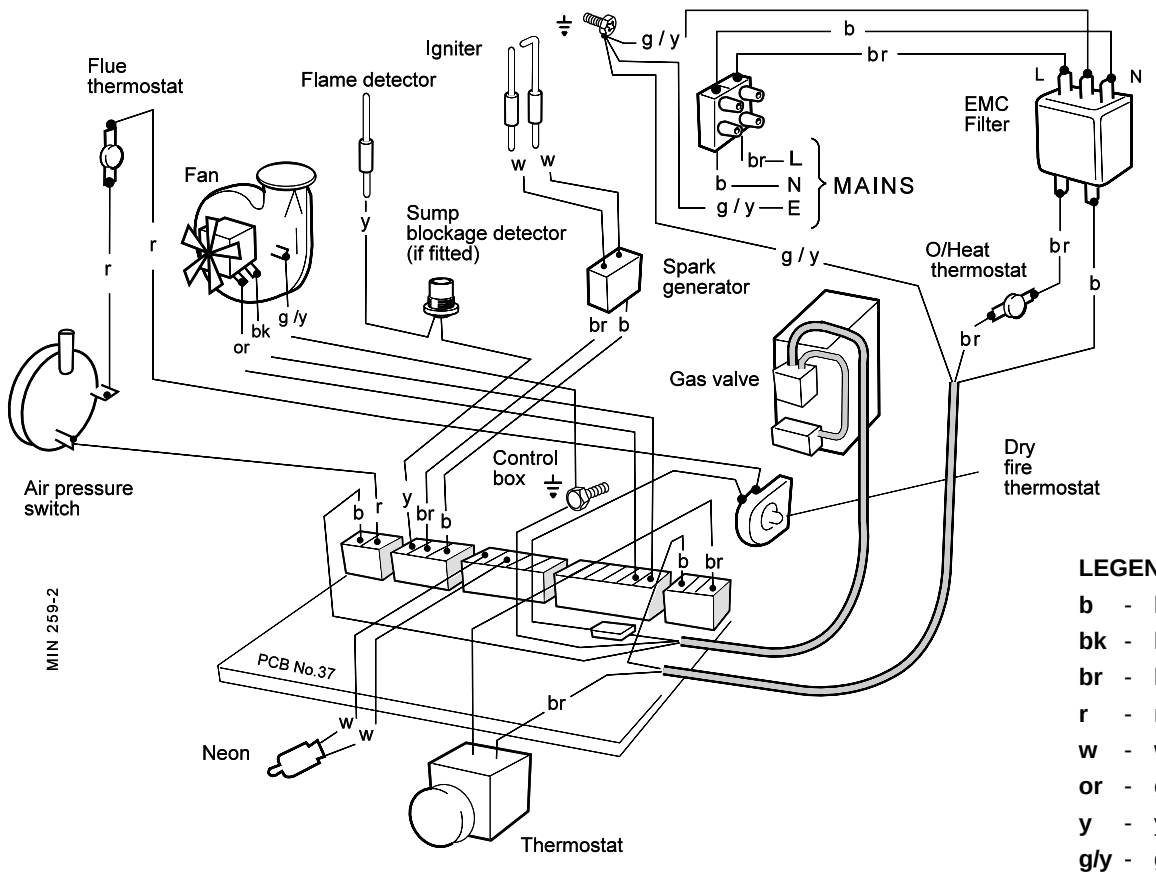

38 MID POSITION VALVE - pumped only

1. Some earth wires are omitted for clarity. Ensure proper earth continuity when wiring
2. This is a fully controlled system - set the boiler thermostat to MAXIMUM.
3. Numbering of thermostat terminals applies only to the manufacturer mentioned.

	Room Thermostat Terminals			Mid Position valve details	Cylinder Thermostat Terminals		
TLX 2259 TLX 2284	1	3	2	HONEYWELL Y PLAN V4073H 1039	1	2	c
	3	1	4	SUNVIC 'Unishare' DT 1701 etc.	1	2	3
	1	2	4	LANDIS & GYR 'LGM' MAV - 322/328	2	3	1
	1	3	-	A. C. L. 679. H. 340.30.UO	1 bk	2 y	3 r
RTE RTS	1 L	2 3	4 N	DRAYTON Flowshare 2	2	3	1
	1	3	4	SOPAC Centra Share ZV20 - EB MID	1	2	c
	2	1	4	DANFOSS DMV - 3M	n. c.	n. o.	com.

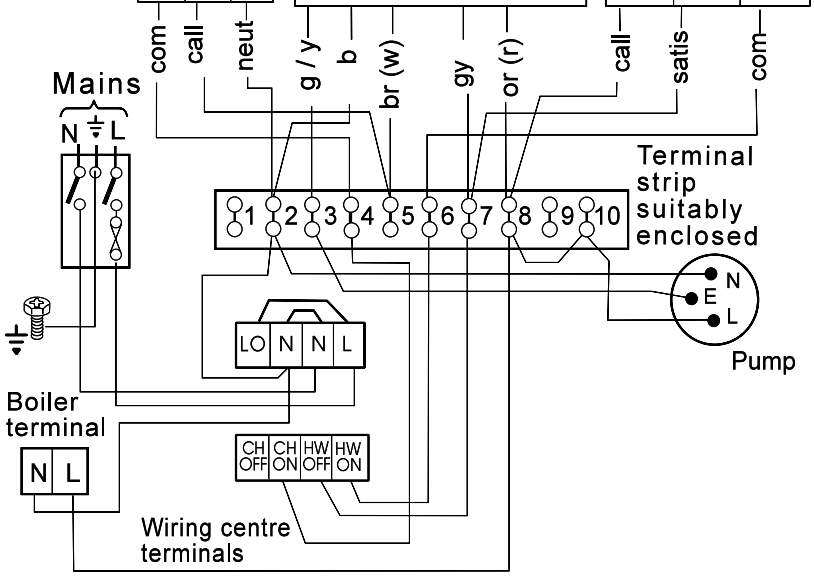

LEGEND

b	-	blue	**w**	-	white
bk	-	black	**g/y**	-	green/yellow
br	-	brown	**gy**	-	grey
r	-	red	**or**	-	orange
y	-	yellow	**v**	-	violet
			pk	-	pink

39 DIVERTER VALVE - pumped only

1. Some earth wires are omitted for clarity - ensure proper earth continuity when wiring.
2. This is a fully controlled system - set the boiler thermostat to MAXIMUM.
3. Numbering of thermostat terminals applies only to the manufacturer mentioned.
4. The boiler should be sized for radiator load only.
5. A clock 'stat may be used instead of separate room 'stat and time switch.

LEGEND

b - blue
br - brown
bk - black
r - red
y - yellow
w - white
g/y - green/yellow

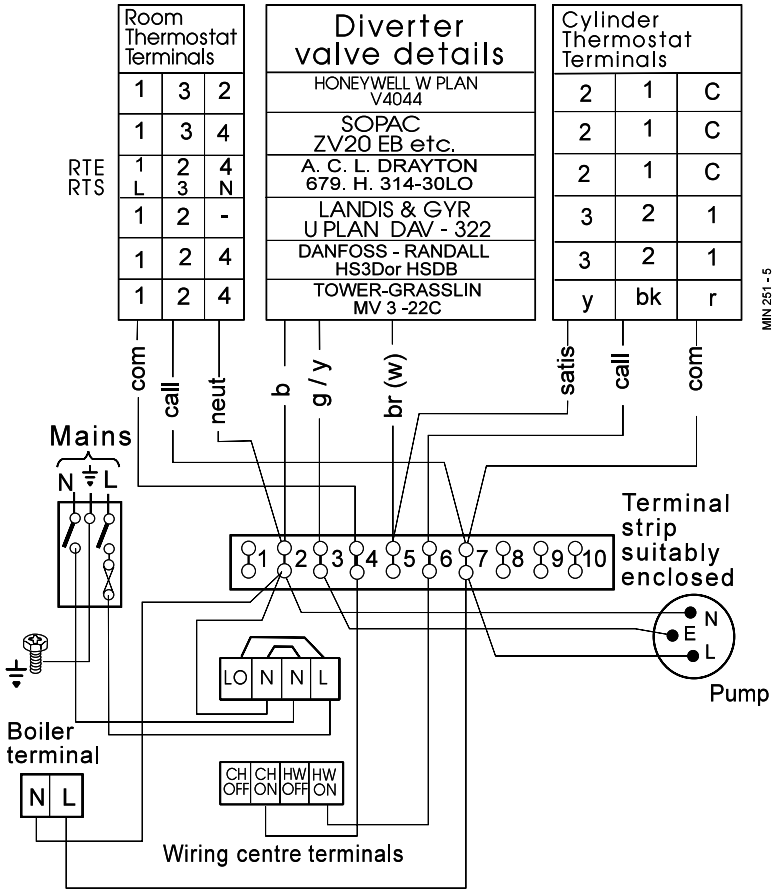

40 ONE VALVE IN HEATING CIRCUIT - pumped only

1. Some earth wires are omitted for clarity - ensure proper earth continuity when wiring.
2. Numbering of thermostat terminals applies only to the manufacturer mentioned.

LEGEND

b - blue
bk - black
br - brown
r - red
y - yellow
w - white
g/y - green/yellow
gy - grey
or - orange
v - violet
pk - pink

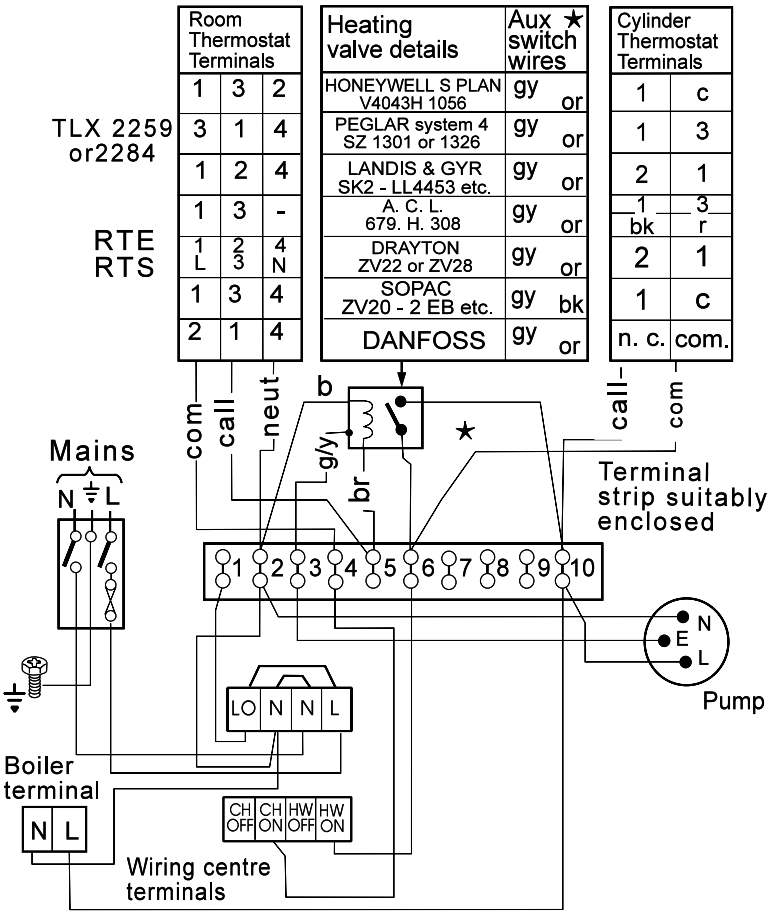

41 TWO SPRING CLOSED VALVES - pumped only

1. Some earth wires are omitted for clarity - ensure proper earth continuity when wiring.
2. This is a fully controlled system - set the boiler thermostat to MAXIMUM.
3. Numbering of thermostat terminals applies only to the manufacturer mentioned.

LEGEND

b	-	blue
bk	-	black
br	-	brown
r	-	red
y	-	yellow
w	-	white
g/y	-	green/yellow
gy	-	grey
or	-	orange
v	-	violet
pk	-	pink

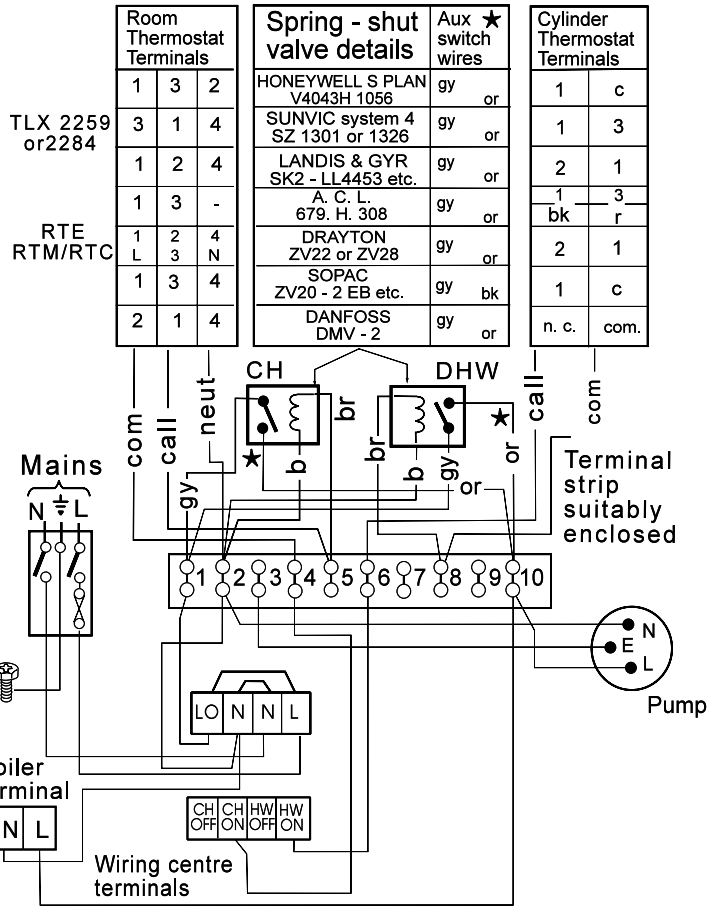

42 FROST PROTECTION

Central heating systems fitted wholly inside the house do not normally require frost protection as the house acts as a 'storage heater' and can normally be left at least 24 hours without frost damage.

However, if parts of the pipework run outside the house or if the boiler will be left off for more than a day or so then a frost thermostat should be wired into the system. This is usually done at the timer, in which case the timer selector switches are set to OFF and all other controls MUST be left in the running position.

The frost thermostat should be sited in a cold place but where it can sense heat from the system.

Wiring should be as shown, with minimal disturbance to other wiring of the timer.

Designation of the terminals will vary but the timer and thermostat manufacturers' leaflets will give full details.

Diagram A shows a double-pole frost thermostat, which should suffice for all systems which do not use the OFF terminals of the timer.

Diagram B shows a 'changeover' frost thermostat, which will cover most systems which do use CH OFF. If, however, on such a system the HW pipework is in an isolated part of the house a second frost thermostat may be used to protect it. If in doubt ask your installer for advice.

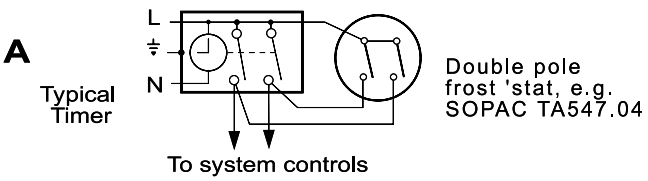

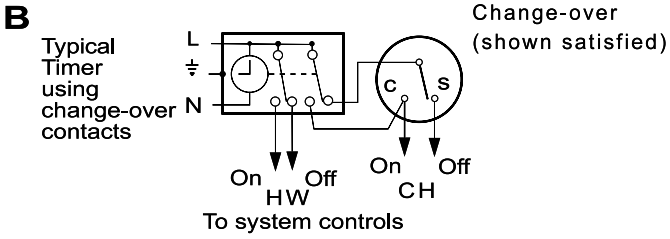

Note.
If the boiler is installed in a garage it may be necessary to fit a pipe thermostat.

43 BOILER WATER CONNECTIONS

The boiler flow and return pipes are supplied fitted to the boiler and ready for top connection.

Note. *For boiler sizes SE 30 FF to SE 60 FF use the 28mm x 22mm connectors supplied in the hardware pack, to reduce the boiler flow and return pipes to 22mm.*

TOP CONNECTION

Connect the system pipework to the boiler flow and return pipes.

BOTTOM CONNECTION

1. Remove the retaining pin and withdraw the thermostat phial from the pocket.
2. Disconnect the electrical leads from the overheat thermostat.
3. Undo the flow and return pipe unions and withdraw the pipes from the boiler.
4. Cut off the spun ends of the pipes and connect pipes of suitable length to terminate 50mm (2") outside the bottom of the boiler casing.
5. Refit the pipe assemblies to the flow and return bosses, ensuring that the gaskets are in position. **Note.** *Fit the return pipe assembly first.*
6. Fit an *automatic* air vent to the top of the **return** pipe assembly and a *manual* air vent to the top of the **flow** pipe assembly (where pressures may at times be negative). Alternatively, a combined feed and vent pipe may be connected to the top of the flow pipe assembly.
7. Connect the system pipework to the flow and return pipes at the bottom of the boiler.
8. Reconnect the overheat thermostat electrical leads and re-insert the boiler thermostat phial into the pocket, retaining it with the split pin.

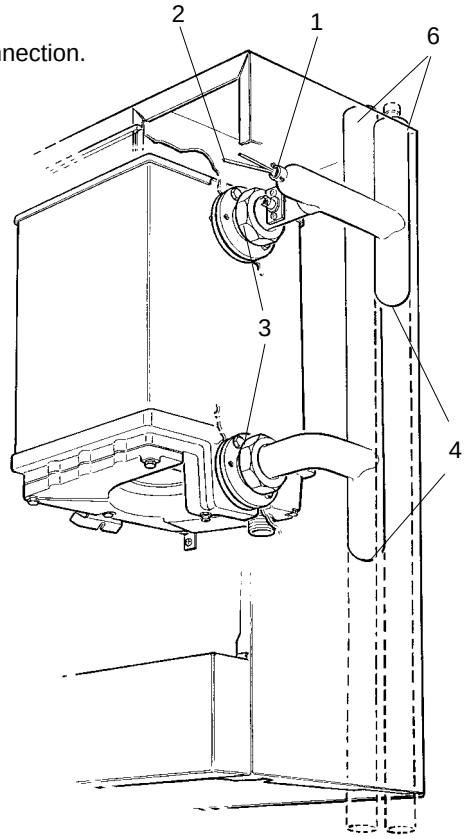

(Pipework shown as a dotted line is not supplied)

44 CONDENSATE DRAIN

Refer also to the British Gas document: 'Guidance Notes for the Installation of Domestic Gas Condensing Boilers' (1989)

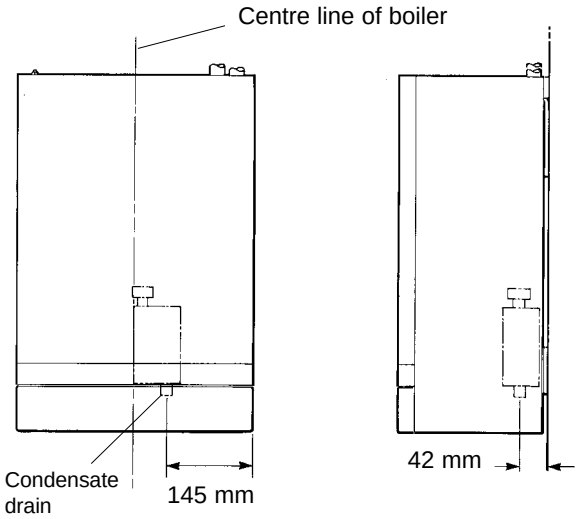

Note. *The drain connection is located at the rear of the controls compartment.*

The condensate drain provided on the boiler must be connected to a drainage point, preferably within the building.

Ensure that the condensate siphon is full of water before commissioning the boiler. Refer to Frame 20 or 28.

A 'tun dish' arrangement between the boiler and the drain may be fitted.

The routing of the drain must be made to allow a minimum fall of 1 in 20 away from the boiler, throughout its length.

The drainage pipework must be arranged so that obstruction (e.g. through freezing) of external drainage pipe does not give rise to spillage within the dwelling.

IMPORTANT. Any external runs must be insulated.

Excessive external pipe runs should be avoided in order to prevent possible freezing.

All pipework and fittings in the condensate drain system must be made of plastic. No other materials may be used.

The drain outlet on the boiler is standard 22mm overflow pipe. This size must not be reduced in any part of its length.

In order to defer the onset of freezing of the condensate drain when the pipe is run externally the pipe should be run as far as possible within the building.

The boiler condensate drain connection is suitable for Bartol 'Polypipe' tubing. An adaptor is supplied to allow the use of Marley 'Terrain' tubing, which is slightly larger. This adaptor should be sealed to the Marley 'Terrain' tubing and to the boiler condensate drain, using a suitable plastic tube adhesive.

45 GAS CONNECTION

Refer to Frame 2 for details of the position of the gas connection.

A MINIMUM working gas pressure of 20 mbar (8" w.g.) must be available at the boiler inlet with the boiler firing. Refer to Frame 47 or 'Servicing' for details of the pressure test point position.

Extend a gas supply pipe NOT LESS THAN 15mm O.D. to the boiler and connect to the gas service cock, situated at the bottom right hand side of the boiler.
The connection MUST be from the RHS rear of the boiler and from either ABOVE or BELOW. *Do not route the pipe behind the control box.*

Ensure that the gas supply pipe does not foul the boiler casing.

Note. *If the pipe run from the meter to the boiler is greater than 3m (10') 22mm O.D. pipe must be used.*

To facilitate connection, it is recommended that the gas service cock is not removed from the gas control valve.

A 1/2" BSP x 15mm connector, pre-fitted with a short stub connection, should be screwed into the cock, using a suitable sealant.

IMPORTANT. The gas service cock contains a non-metallic seal so must not be overheated when making capillary connections.

46 COMMISSIONING AND TESTING

A. Electrical Installation

1. Checks to ensure electrical safety should be carried out by a competent person.
2. ALWAYS carry out the preliminary electrical system checks, i.e. earth continuity, polarity, resistance to earth and short circuit, using a suitable test meter.

B. Gas Installation

1. The whole of the gas installation, including the meter, should be inspected and tested for soundness and purged in accordance with the recommendations of BS. 6891.
2. Purge air from the gas installation by loosening the gas cock union and purge until gas is smelled.
3. Retighten the union and test for gas soundness.

WARNING. *Whilst effecting the required gas soundness test and purging air from the gas installation, open all windows and doors, extinguish naked lights and DO NOT SMOKE.*

47 INITIAL LIGHTING

Note. *The boiler is shown with the front panel removed and the controls drop-down door open.*

LEGEND

- **A** 'Burner on' neon
- **B** Thermostat knob
- **C** Gas service cock
- **D** Inlet pressure test point
- **E** Burner pressure test point
- **F** Burner pressure adjuster
- **G** Fan pressure test point (Hi)
- **H** Dry fire thermostat reset button
- **I** Fan pressure test point (Lo)
- **J** Overheat thermostat reset button
- **K** Flue gas sampling point
- **L** Flue 'stat reset button (behind sealing panel)

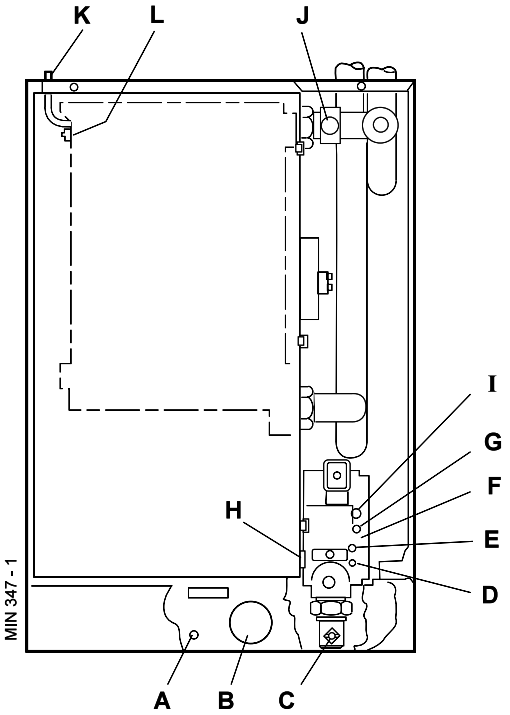

1. Check that the system has been filled and that the boiler is not air locked - air in the system could trip the dry fire "stat (H)
2. Check that all the drain cocks are closed and any valves in the flow and return are open.
3. Check that the electrical supply is OFF.
4. Check that the flue 'stat (L) is calling for heat - press the reset button.
5. Refit the boiler sealing panel - refer to Frame 21.
6. Check that the gas service cock (C) is ON and that the boiler thermostat knob (B) is OFF.
7. Check that the dry fire thermostat (H) and overheat thermostat (J) are calling for heat - press the reset buttons.
8. Remove the screw in the burner pressure test point (E) and connect a gas pressure gauge via a flexible tube.
9. Switch the electricity supply ON and check that all external controls are calling for heat.
10. Set the boiler thermostat knob (B) to position 6. The gas control solenoid valve should open and the spark commence, continuing until the burner is established.
11. Check that the burner lights smoothly and that the 'Burner on' neon (A) illuminates. If this does not occur within 10 seconds, turn the thermostat knob to OFF, wait for 5 seconds then repeat step 10. If the burner still does not light refer to the 'Fault Finding' section.
12. Test for gas soundness around ALL boiler gas components, using leak detection fluid.
13. Operate the boiler for 20 minutes to stabilise the burner temperature.
14. The boiler is spot rated. Check that the burner pressure corresponds to the setting given on the data badge, located at the RHS of the boiler casing. Adjust as necessary via the adjuster screw (F). Prise aside the plastic cover and turn the screw CLOCKWISE to *reduce* the pressure or ANTICLOCKWISE to *increase* the pressure. Refit the cover.
15. Set the thermostat knob (B) to OFF.
16. Switch the electricity supply OFF.
17. Remove the pressure gauge and tube. Replace the sealing screw in the pressure test point. Ensure a gas tight seal is made.
18. Refit the boiler front and bottom panels, using the screws previously removed.
19. Close the controls pod door.

48 GENERAL CHECKS

Make the following checks for correct operation

1. Operate the thermostat knob and check that the burner and 'Burner on' neon, light and extinguish in response.

2. The correct operation of ANY timer and all other system controls should be proved. Operate each control separately and check that the main burner or circulating pump, as the case may be, responds.

3. Water circulation system:

   Note. *Fernox Superfloc, or Sentinel X300 (new systems) or X400 (existing systems) flushing solutions should be used during the flushing procedure. Refer to Frame 9.*

Knob Setting	Flow Temperature °C	Flow Temperature °F
1	50	120
2	60	140
3	66	150
4	71	160
5	77	170
6	82	180

   a. With the system HOT examine all water connections for soundness.

   b. With the system still HOT, turn off the gas, water and electricity supplies to the boiler and drain down to complete the flushing process.

   c. Refill and vent the system, add inhibitor (see Frame 9), clear all air locks and again check for water soundness.
   Adhere the water treatment warning label, supplied in the hardware pack, in a *prominent position* on the system, to prevent the use of incorrect water treatment additives.

   d. Balance the system (see Frame 4).

4. Check the condensate drain for leaks and check that it is discharging correctly

5. Finally set the controls to the User's requirements.

- If an optional timer kit is fitted then refer to the instructions supplied with the kit.

- The temperatures quoted alongside are approximate, and vary between installations.

49 HANDING OVER

After completing the installation and commissioning of the system the installer should hand over to the householder by the following actions:

1. Hand the User's Instructions to the householder and explain his or her responsibilities under the Gas Safety (Installation and Use) Regulations 1994, amendments 1996 or rules in force.

2. Draw attention to the Lighting Instruction label affixed to the controls pod door.

3. Explain and demonstrate the lighting and shutting down procedures.

4. The operation of the boiler and the use and adjustment of ALL system controls should be fully explained to the householder to ensure the greatest possible fuel economy consistent with household requirements of both heating and hot water consumption.

   Advise the User of the precautions necessary to prevent damage to the system and to the building in the event of the system remaining inoperative during frosty conditions.

5. Explain the function and the use of the boiler thermostat and external controls.

6. Explain and demonstrate the function of time and temperature controls, radiator valves, etc., for the economic use of the system.

7. If any timer kit is fitted then draw attention to the Timer Kit User's Instructions and hand them to the householder.

8. **After installation, commissioning and customer hand-over instructions please complete the benchmark appliance log book and leave this with the customer.**

9. Stress the importance of regular servicing by a CORGI registered installer and that a comprehensive service should be carried out AT LEAST ONCE A YEAR.

50 SERVICING SCHEDULE

To ensure the continued safe and efficient operation of the appliance it is recommended that it is checked at regular intervals and serviced as necessary. The frequency of servicing will depend upon the installation condition and usage but should be carried out at least annually. It is the law that any service work must be carried out by a registered CORGI installer.

As the installer you may wish to undertake the service contract yourself or, alternatively, offer to the customer the benefits of the Henrad Care Scheme, details of which are outlined in the Householder pack supplied with this boiler.

Note.

Some aluminium oxide build-up on the heat exchanger fins is quite usual with this type of condensing boiler. Though removal is recommended annually, the heat exchanger MUST *be inspected and cleaned after a MAXIMUM of two years operation.*

1. Remove the boiler bottom panel. Refer to Frame 59, step 4.
2. Light the boiler and carry out a pre-service check, noting any operational faults.
3. Check the operation of the pressure switch. Refer to Frame 51.
4. Relight the boiler and operate for at least 20 minutes. Check the gas consumption.
5. Connect a suitable gas analyser to the sampling point on top of the boiler . Refer to Frame 51 (optional test).

   For correct boiler operation the CO/CO_2 content of the flue gas should not be greater than 0.004 ratio.

   If this is the case, and the gas input is at least 90% of the nominal, then no further action need be taken. If not, proceed to step 6 but see note above.
6. Clean the main burner.
7. Clean the heat exchanger. **Note.** *This must be done with the heat exchanger and deposits in a dry condition. Refer to Frame 55.*
8. Check the main injector for blockage or damage.
9. Wherever possible remove and clean the condensate siphon (refer to Frame 74) and check the drain for blockage.
10. Check that the flue terminal is unobstructed and that the flue system is sealed correctly.

The servicing procedures are covered more fully in Frames 51 to 57 and MUST be carried out in sequence.

Note. *In order to carry out either servicing or replacement of components the boiler front panel and sealing panel must be removed. Refer to Frames 12 and 52.*

WARNING. Always turn off the gas supply at the gas service cock, and switch off and disconnect the electricity supply to the appliance before servicing.

IMPORTANT.

1. After completing the servicing or exchange of components always test for gas soundness and carry out functional checks as appropriate.
2. When work is complete the sealing panel MUST be correctly refitted, ensuring that a good seal is made.

DO NOT OPERATE THE BOILER IF THE SEALING PANEL IS NOT FITTED.

51 PRESSURE SWITCH OPERATION

1. Remove the bottom panel. Refer to Frame 13.
2. Connect a flexible tube to the pressure switch tapping, located at the bottom of the boiler, behind the control box.

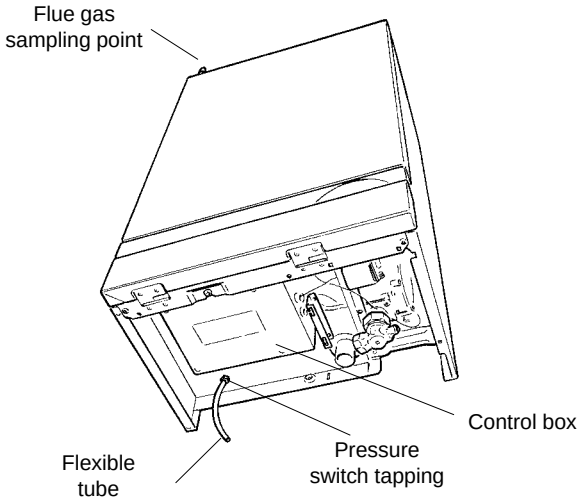

3. With the boiler running, blow gently into the tube. The burner should shut down and the 'Burner on' neon extinguish. The fan should continue to run. If this does not occur replace the pressure switch. Refer to Frame 71.
4. Remove the flexible tube and refit the boiler bottom panel.

Note. *The pressure switch tapping does not have a cap or sealing screw and MUST be left open to atmosphere.*

52 BOILER SEALING PANEL REMOVAL

1. Turn off the gas supply at the gas service cock and disconnect the electricity supply.

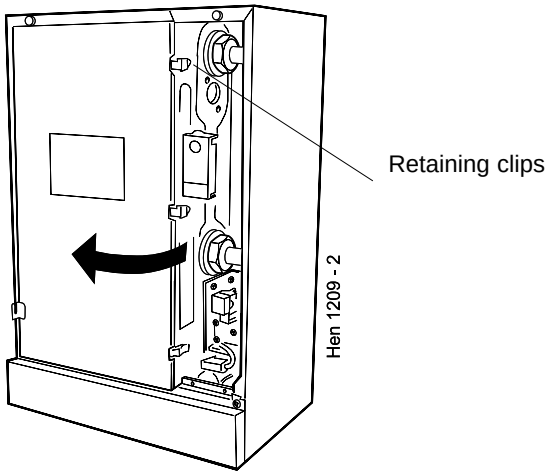

2. Remove boiler front panel as described in Frame 12.
3. Release the 3 retaining clips on the right hand side of the panel.
4. Swing the panel open to the left and disengage it from the boiler.

53 FAN REMOVAL AND CLEANING

1. Disconnect the electrical leads from the fan.
2. Disconnect the pressure sensing pipe from the fan.
   - **a.** Undo the 2 screws securing the pipe to the fan.
   - **b.** Undo the 2 screws securing the pipe clamping plate to the manifold block.
   - **c.** Withdraw the clamping plate.
   - **d.** Withdraw the pipe from the boiler.
3. Press the retaining bracket lever upwards and rotate the fan body to the right to disengage the fan scroll from the bracket. Continue rotating to disengage the bayonet fixing on the fan outlet.
4. Withdraw the fan.
5. Check that the fan impeller runs freely. Clean with a soft brush or renew as necessary. Refer to Frame 70.
6. Check that the low pressure sensing pipe is undamaged and free from obstruction.

Note. *Always take care when handling the fan, in order to preserve the balance of the impeller.*

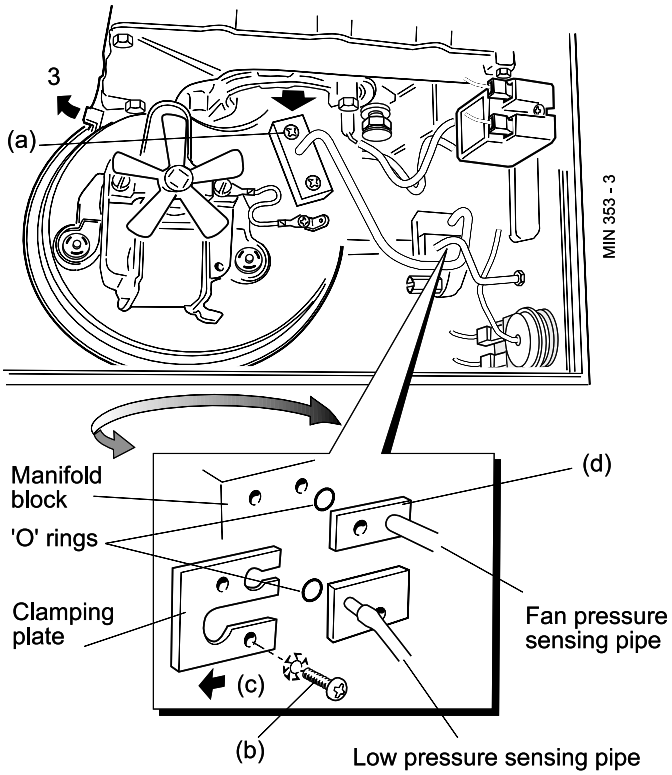

54 BURNER REMOVAL AND CLEANING

1. Disconnect the 2 ignition leads and one detection lead from the electrodes.
2. Undo the 3 fixing screws securing the burner assembly.
3. Withdraw the burner assembly downward and out of the heat exchanger.
4. Brush off any deposits that may have collected on the burner, ensuring that the flame ports are unobstructed.
   Note. *Brushes with metallic bristles MUST NOT be used.*
5. Inspect the ignition and detection electrodes. Ensure they are clean and in good condition - replace if necessary.
6. Check the ignition and electrode gaps are correct.
7. Check that the ignition and detection leads are in good condition and renew as necessary.

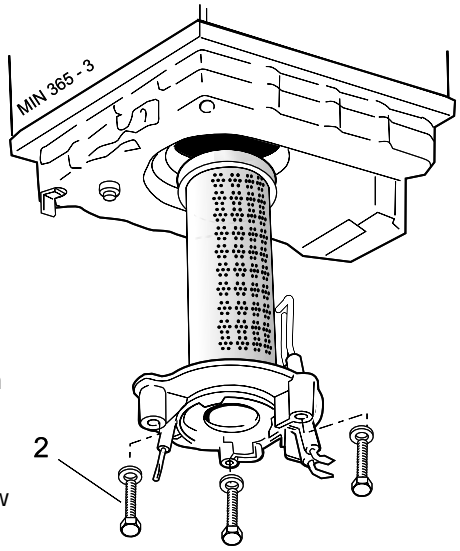

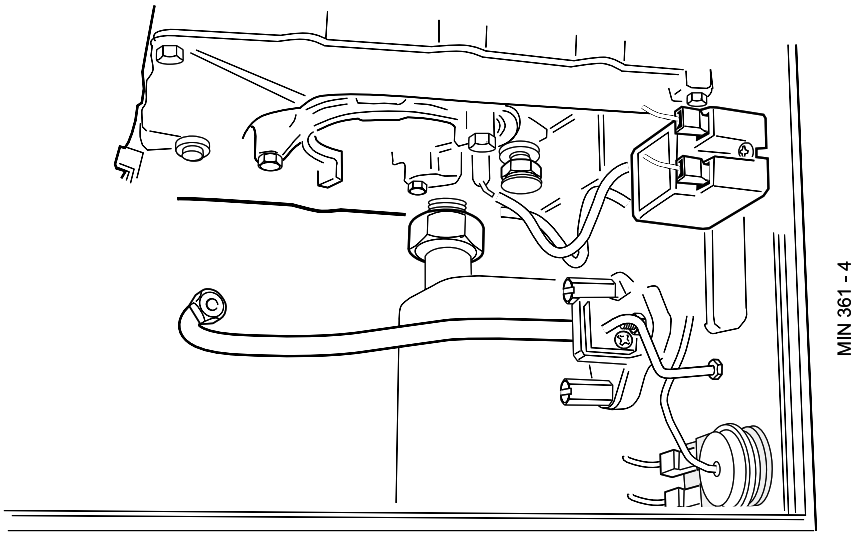

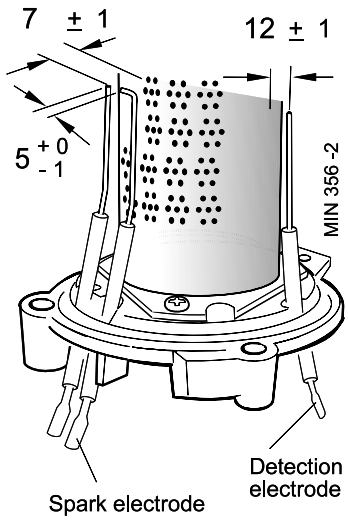

55 CLEANING THE HEAT EXCHANGER

IMPORTANT.

Deposits are most effectively removed from the fins if they are dry. Ensure this by running the pre-service checks with the boiler thermostat set to maximum to avoid condensing conditions.

Note.
Some aluminium oxide build-up on the heat exchanger fins is quite usual with this type of condensing boiler. Though removal is recommended annually, the heat exchanger MUST *be inspected and cleaned after a MAXIMUM of 2 years operation.*

1. Place a plastic sheet or similar beneath the boiler and remove all visible loose deposits from the heat exchanger fins, using a suitable brush.
2. Take care to clean debris from the ledge inside the combustion chamber.

56 RE-ASSEMBLY

Reassemble the boiler in the following order:

1. Refit the burner, renewing any damaged or deteriorating sealing gaskets.
2. Reconnect the 2 ignition leads and the detection lead.
3. Refit the fan, engaging it in the bayonet fixing and locating it in the retaining bracket.
   Ensure that the 'O' ring seal is in place.
4. Reconnect the pressure sensing pipe to the fan and secure to the manifold block (together with the low pressure sensing pipe), using the clamping plate.
   Ensure that the 'O' ring seals are in place.
5. Reconnect the fan electrical leads.
6. Refit the boiler sealing panel.

IMPORTANT. Ensure the boiler sealing panel is correctly fitted and that a good seal is made.

7. Refit the boiler front panel.
8. Turn on the gas supply at the gas service cock.
9. Reconnect the electrical supply.

Note. *The pressure sensing pipes must be tested for gas soundness*

57 BURNER PRESSURE CHECK

After any servicing, reference should be made to Table 2, page 3 (or the data badge), which quote details of the burner pressures for the boiler models.

The burner pressure should be checked against these values and adjusted accordingly. Refer to Frame 47, 'Initial Lighting' .

If the burner pressure is very low check the fan pressure. Refer to Fault Finding Frame 82.

REPLACEMENT OF COMPONENTS

58 GENERAL

WHEN REPLACING ANY COMPONENT

1. Isolate the electricity supply
2. Turn off the gas supply.
3. Remove the boiler front panel and sealing panel. Refer to Frames 12 and 52.

IMPORTANT. When work is complete the sealing panel must be correctly fitted, ensuring that a good seal is made.

Note.
In order to assist fault finding, the control box printed circuit board is fitted with three indicator lights which represent the following boiler conditions. Refer to Frame 72.

LED 2 Lockout

LED 3 Fan on

LED 4 Mains electricity on

THE BOILER MUST NOT BE OPERATED IF THE SEALING PANEL IS NOT FITTED.

59 CONTROL THERMOSTAT REPLACEMENT

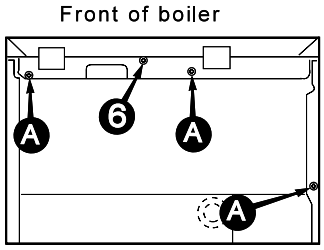

View of underside of boiler

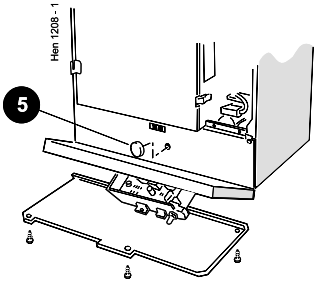

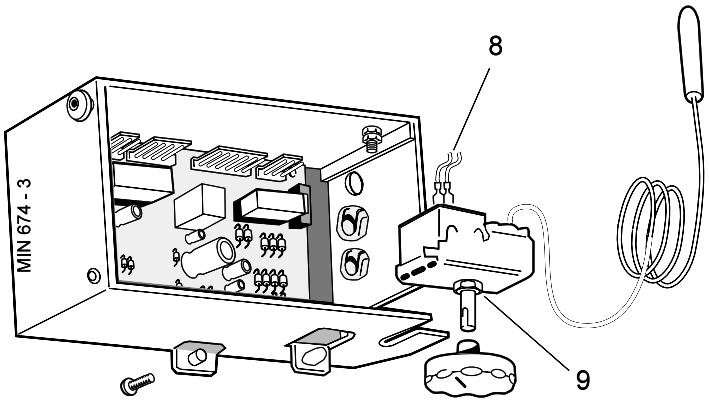

Refer also to Frame 10 - 'Boiler exploded view' and Frame 37 'Pictorial wiring.'

1. Refer to Frame 58.
   Note. *The sealing panel need not be removed.*
2. Remove the split pin and withdraw the thermostat phial from the pocket. Refer to Frame 60.
3. Release the thermostat capillary from its retaining clips.
4. Remove the boiler bottom panel.
   - **a.** Undo the 3 retaining screws.
   - **b.** Push the panel backward then to the right to withdraw it from the boiler.
5. Pull off the thermostat knob.
6. Undo the control box retaining screw.
7. Push the control box back then drop the front of the box. If access is restricted pull the control box forward and remove.
8. Disconnect the thermostat electrical leads.
9. Undo the retaining nut and withdraw the thermostat.
10. Fit the new thermostat and reassemble in reverse order, ensuring that the thermostat capillary is correctly routed.

60 OVERHEAT THERMOSTAT REPLACEMENT

Refer also to Frame 10 'Boiler exploded view' and Frame 37 'Pictorial wiring.'

1. Refer to Frame 58. **Note**.*The sealing panel need not be removed.*
2. Disconnect the overheat thermostat electrical leads.
3. Undo the 2 securing screws and withdraw the thermostat.
4. Fit the new overheat thermostat and reassemble in reverse order.

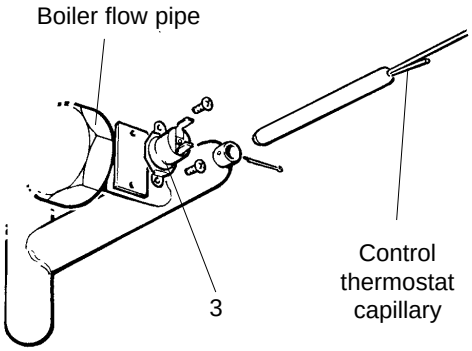

61 DRY FIRE THERMOSTAT REPLACEMENT

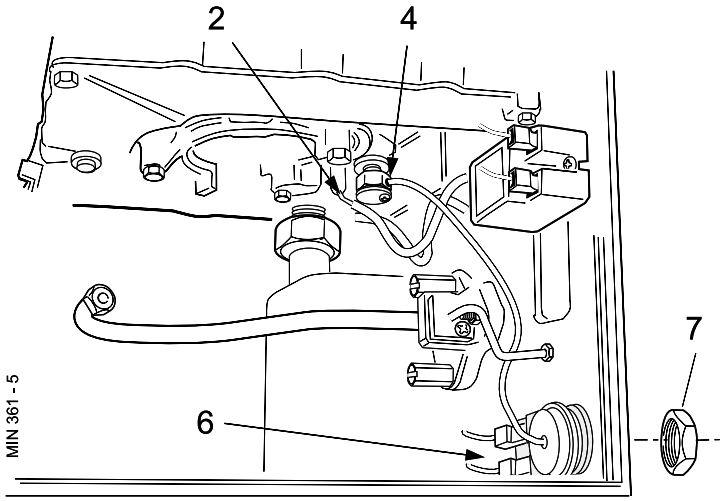

Note. *Take care not to damage the thermostat capillary when inserting it into the pocket.*

Refer also to Frame 10 'Boiler exploded view'.

1. Refer to Frame 58.
2. Disconnect the ignition electrode leads.
3. Remove the fan assembly. Refer to Frame 53.
4. Disengage the thermostat capillary from the retaining clip.
5. Withdraw the thermostat phial from the pocket.
6. Disconnect the thermostat electrical leads.
7. Undo the thermostat retaining nut and withdraw the thermostat.
8. Fit the new dry fire thermostat and reassemble in reverse order.

62 FLUE THERMOSTAT REPLACEMENT

Refer also to Frame 10 'Boiler exploded view' and Frame 37 'Pictorial wiring.'

1. Refer to Frame 58.
2. Disconnect the flue thermostat electrical leads.
3. Unscrew the thermostat from the side of the heat exchanger.
4. Fit the new flue thermostat and reassemble in reverse order.

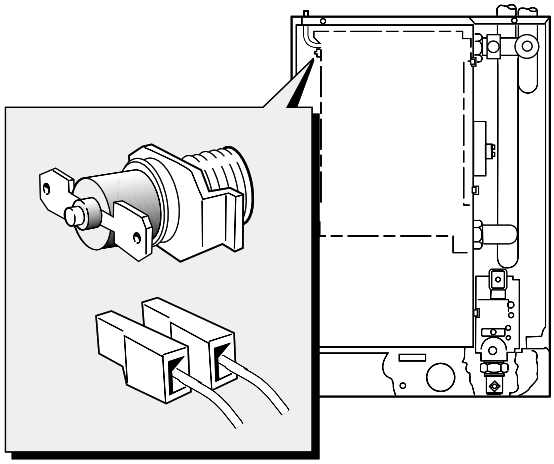

63 IGNITION AND DETECTION ELECTRODE REPLACEMENT

Dimensions in mm.

Refer also to Frame 10 'Boiler exploded view.'

1. Refer to Frame 58.
2. Remove the fan assembly. Refer to Frame 53.
3. Remove the burner assembly. Refer to Frame 65, steps 3 to 5.
4. Disconnect the electrode leads as required.
5. Undo the electrode securing bracket screws as required.
6. Fit new electrodes as necessary, ensuring that the gaskets are in good condition and sealing correctly - renew as necessary.
7. Check the ignition / detection gaps.
8. Reassemble in reverse order.

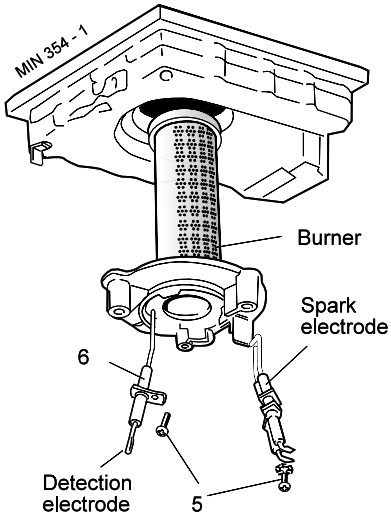

9. Check the ignition and operation of the burner.

Note. *The ignition electrodes are replaced as a pair; the detection electrode is a single probe.*

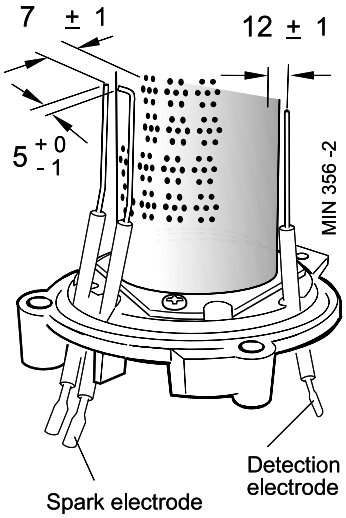

64 SPARK GENERATOR REPLACEMENT

1. Refer to Frame 58.
2. Disconnect the leads from the ignition electrodes
3. Disconnect the electrical leads from the ignition generator.
4. Undo the single screw fixing on the spark generator
5. Fit the new spark generator and re-assemble in reverse order.
6. Check the ignition and operation of the burner.

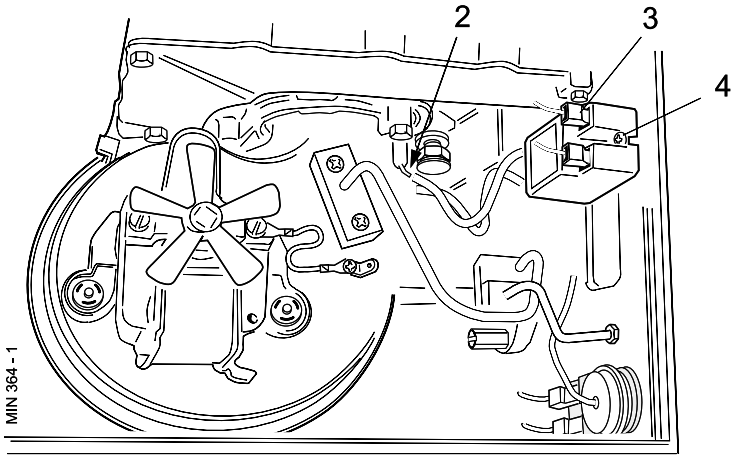

65 BURNER REPLACEMENT

1. Refer to Frame 58.
2. Remove the fan assembly. Refer to Frame 53.
3. Disconnect the 2 ignition leads and one detection lead from the electrodes.
4. Undo the 3 fixing screws securing the burner assembly.
5. Withdraw the burner assembly downward and out of the heat exchanger.
6. Remove the ignition and detection electrodes. Refer to Frame 63.
7. Remove the 3 securing screws and withdraw the burner from the mounting flange.
8. Fit the new burner, replacing any damaged or deteriorating gaskets.
9. Reassemble in reverse order.

Note. *Check the ignition and detection gaps. Refer to Frame 63.*

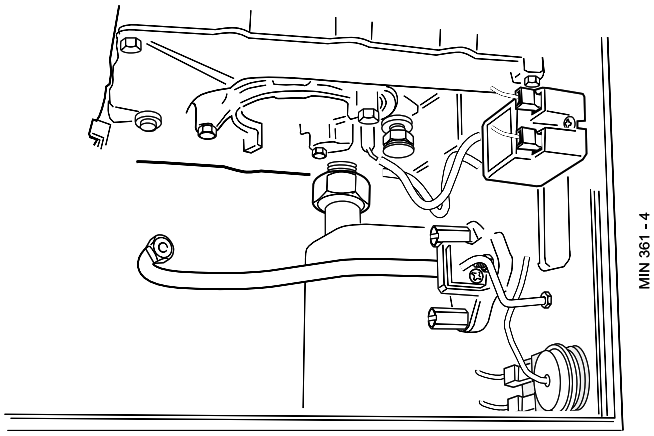

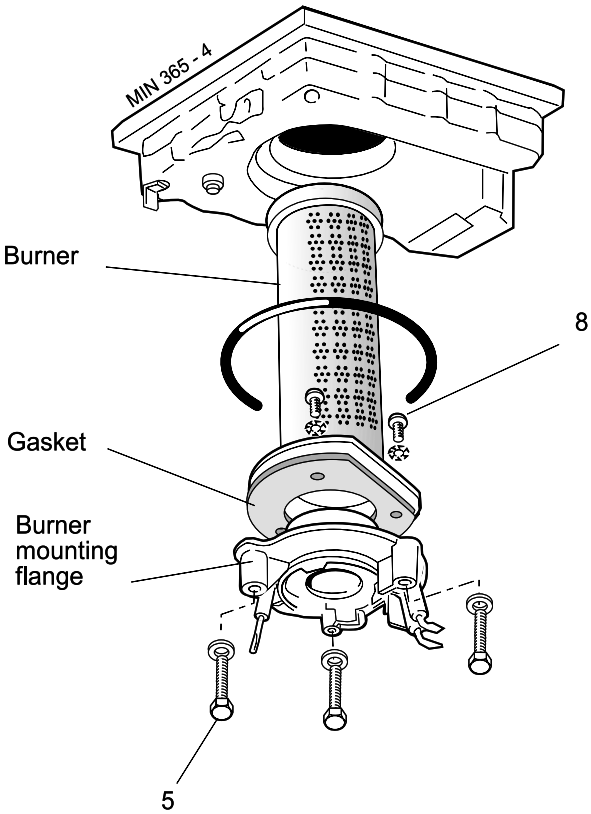

66 BURNER INJECTOR REPLACEMENT

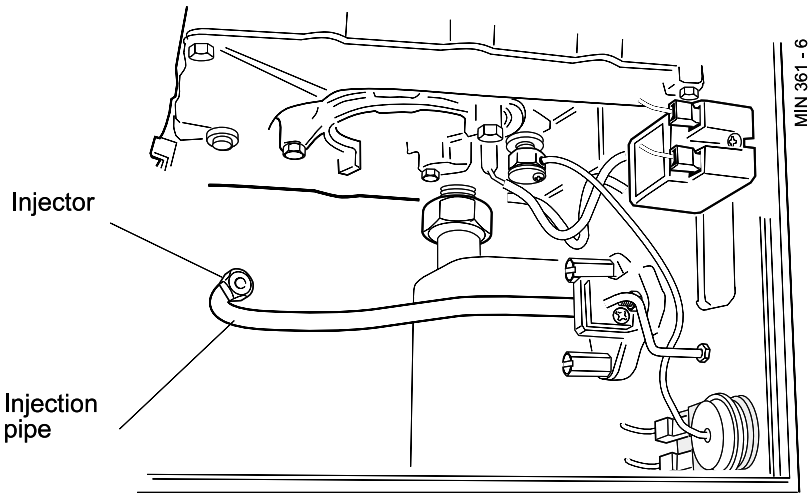

1. Refer to Frame 58.
2. Remove the fan assembly. Refer to Frame 53.
3. Unscrew the injector from the gas injection pipe.
4. Fit the new injector using a suitable jointing compound sparingly.
5. Reassemble in reverse order.

67 GAS CONTROL VALVE REPLACEMENT

Refer also to Frame 10 - 'Boiler exploded view.'

1. Refer to Frame 58.

2. Remove the casing bottom panel. Refer to Frame 59.

3. Remove the control panel.

- **a.** Pull off the thermostat knob.
- **b.** Undo the control box retaining screw. Refer to Frame 59.
- **c.** Supporting the control panel, undo the two retaining screws and withdraw the panel.

4. Remove the fan unit. Refer to Frame 53.

5. Disengage the low pressure sensing pipe from the manifold block.

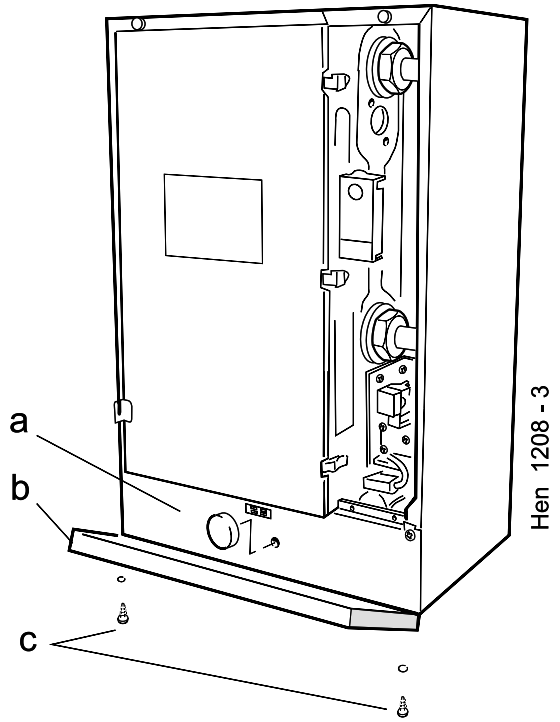

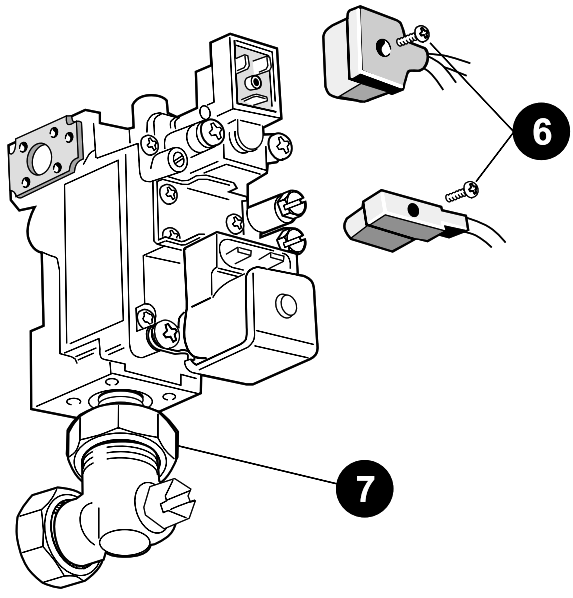

6. Undo the 2 retaining screws and unplug the electrical leads from the gas valve.

7. Undo the gas cock union connection.

8. Undo the 2 extended nuts retaining the gas injection pipe and withdraw the pipe, taking care not to lose the "O" ring seal.

9. Supporting the valve, undo the 3 retaining screws and withdraw the gas valve, complete with mounting bracket and manifold block.

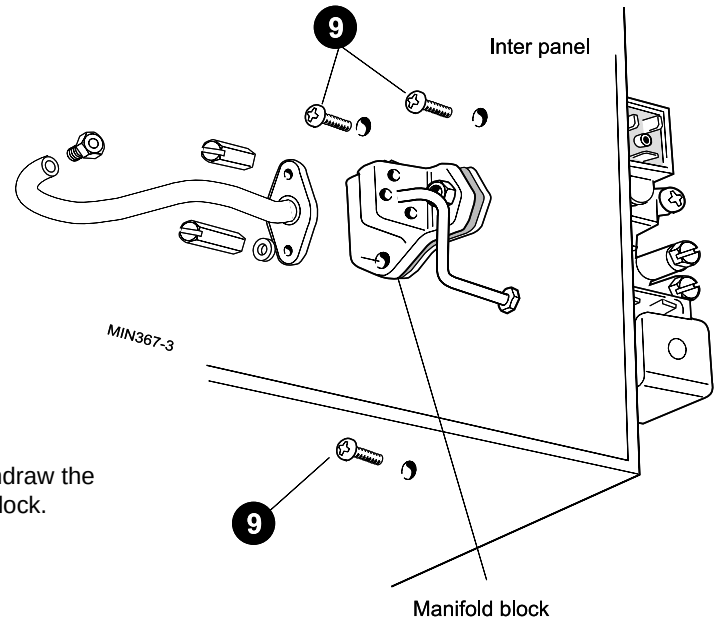

68 GAS CONTROL VALVE REPLACEMENT - *continued*

10. Undo the retaining nut and withdraw the manifold from the gas valve mounting bracket.

11. Undo the 6 retaining screws and separate the gas valve from the mounting bracket.

12. Transfer the bracket and manifold to the new gas valve, ensuring that any damaged or deteriorating gaskets are replaced.

13. Transfer the gas cock union to the new gas valve, using a suitable approved jointing compound, sparingly.

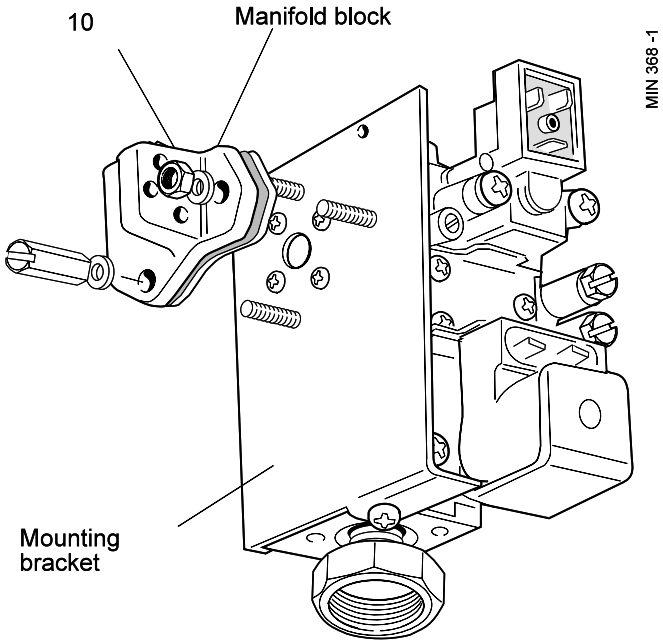

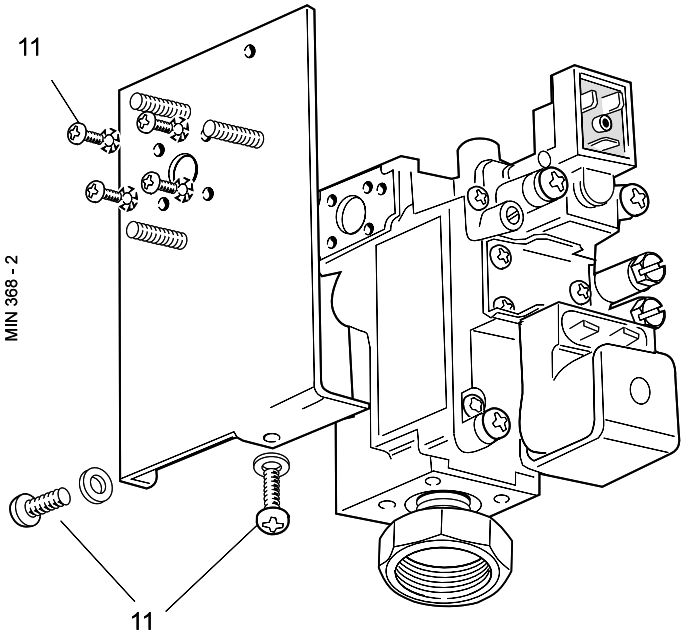

14. Fit the new gas valve in reverse order, ensuring that the gas injection pipe O ring seal is refitted.

15. Check the operation of the new gas valve.

16. Operate the boiler for at least 20 minutes and set the burner pressure to the value shown on the data badge. Refer to Frame 47.

69 GAS CONTROL VALVE SOLENOID REPLACEMENT

Refer also to Frame 10 - 'Boiler exploded view'.

To replace either solenoid follow steps 1 - 6.

1. Refer to Frame 58.
Note. *The sealing panel need not be removed.*

2. Remove the control panel. Refer to Frame 67.

3. Undo the retaining screw and unplug the electrical lead from the solenoid.

4. Undo the 2 securing screws and remove the solenoid.

5. Fit the new solenoid and re-assemble in reverse order.

6. Check the operation of the new solenoid.

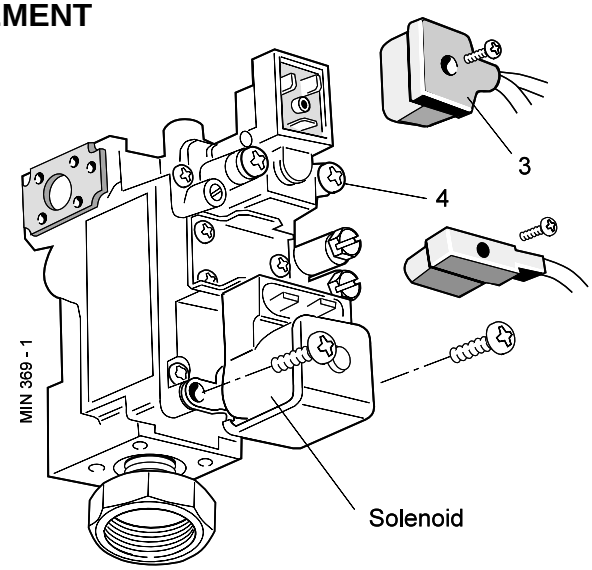

70 FAN UNIT REPLACEMENT

Refer also to Frame 10 - 'Boiler exploded view'.

1. Refer to Frame 58.
2. Disconnect the electrical leads from the fan.
3. Disconnect the pressure sensing pipe from the fan.
   - **a.** Undo the 2 screws securing the pipe to the fan.
   - **b.** Undo the 2 screws securing the pipe clamping plate to the manifold block.
   - **c.** Withdraw the clamping plate.
   - **d.** Withdraw the pipe from the boiler.
4. Press the retaining bracket lever upward and rotate the fan body to the right to disengage the fan scroll from the bracket. Continue rotating to disengage the bayonet fixing on the fan outlet.
5. Withdraw the fan.

   Note. *Always take care when handling the fan in order to preserve the balance of the impeller.*
6. Fit the new fan in reverse order, ensuring that:
   - **a.** The O ring seal is correctly refitted.
   - **b.** The sensing pipe clamping plate is correctly refitted with the pipe sealing 'O' rings in place.
7. Check the operation of the new fan.

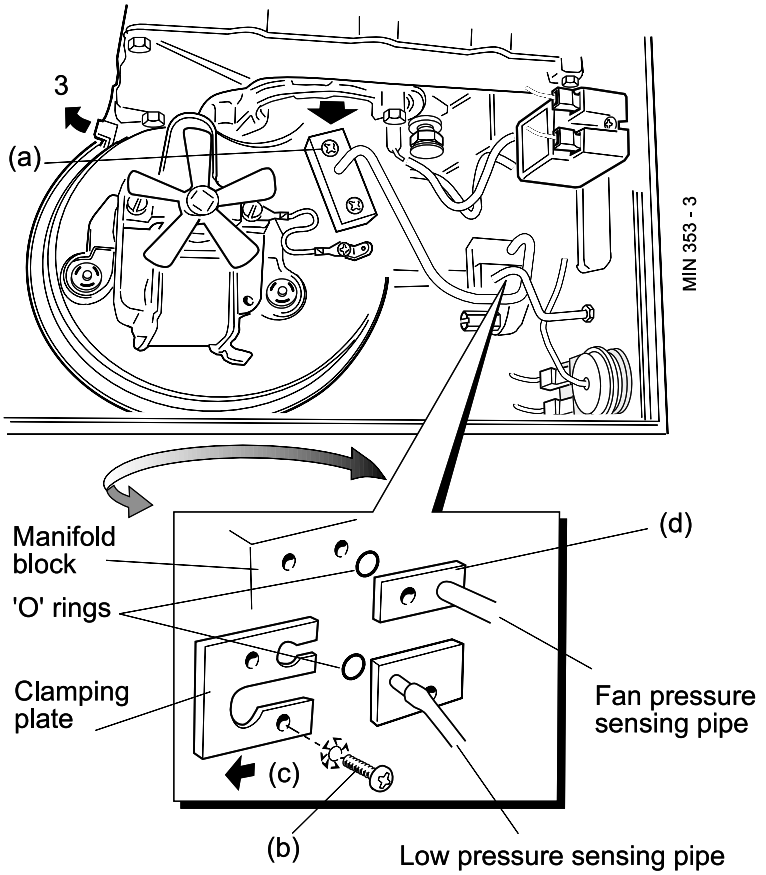

71 PRESSURE SWITCH REPLACEMENT

Refer also to Frame 10 'Boiler exploded view'.

1. Refer to Frame 58.
2. Remove the fan unit. Refer to Frame 53.
3. Disconnect the pressure sensing pipe from the switch, noting its position - tapping P1(+).
4. Disconnect the electrical leads from the switch, *noting their position.* Connections are made to terminals 1 and 3.
5. Undo the securing screw and withdraw the switch.
6. Fit the new switch in reverse order
7. Check the operation of the new switch. Refer to Frame 51.

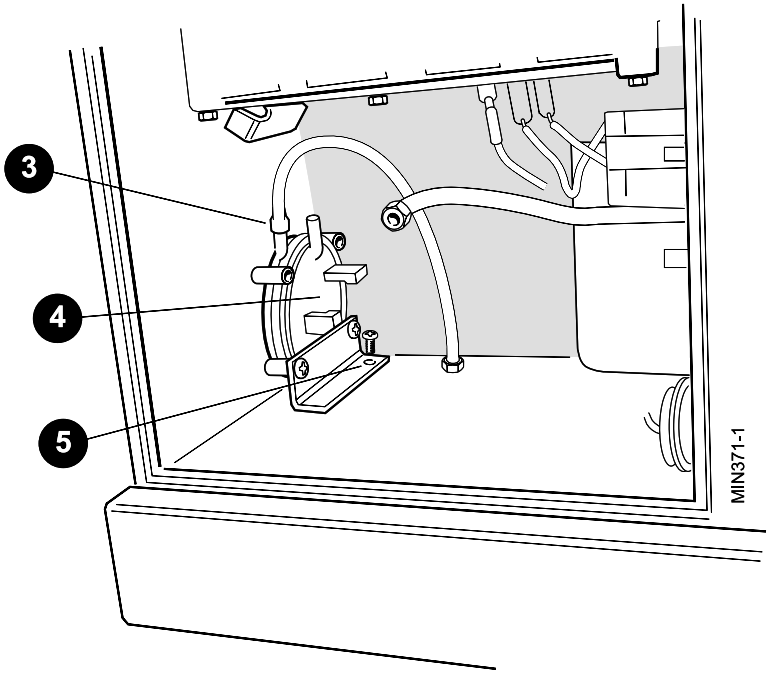

72 PRINTED CIRCUIT BOARD REPLACEMENT

Refer also to Frame 10 - 'Boiler exploded view' and Frame 37 - 'Pictorial wiring'.

1. Refer to Frame 58. **Note.** *The sealing panel need not be removed.*
2. Remove the boiler bottom panel. Refer to Frame 59, step 4.
3. Open the controls pod door and pull off the thermostat knob.
4. Undo the control box securing screw and swing the box into the 'servicing' position. If access is restricted pull the box forward and free from the boiler. Refer to Frame 59.

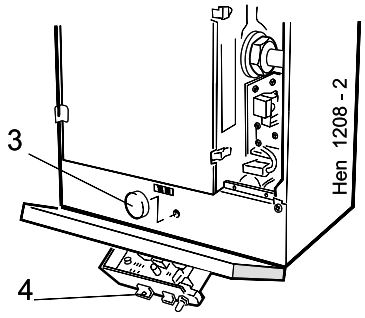

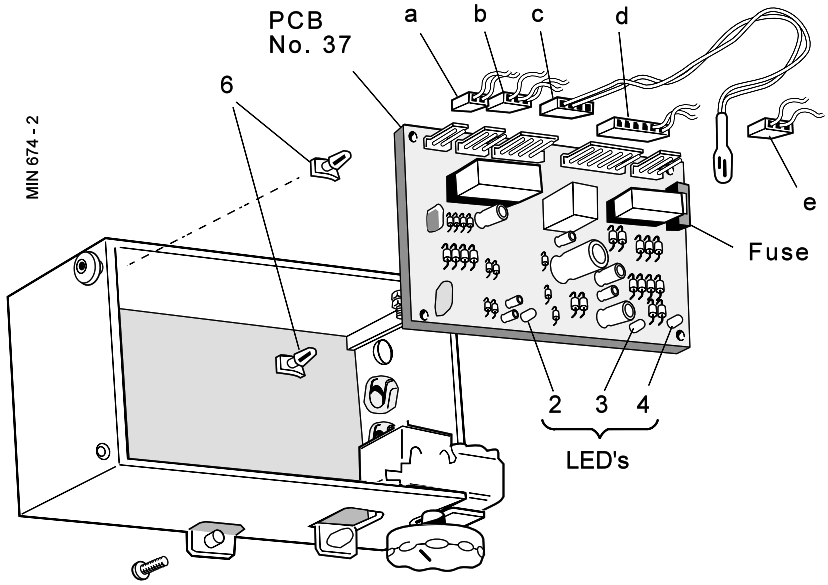

5. Unplug the following leads from the PCB:
   - **a.** Gas valve lead
   - **b.** Flame detection lead
   - **c.** 'Burner on' neon lead
   - **d.** Fan lead
   - **e.** Mains input lead
6. Squeeze the retaining tabs on the 2 location pins and withdraw the PCB, complete with the other 2 pins. Transfer these pins to the new PCB.
7. Fit the new PCB and re-assemble in reverse order.
   Ensure that all electrical connections are correctly remade.
8. Check the operation of the boiler.

73 'BURNER ON' NEON REPLACEMENT

Refer also to Frame 37 - Pictorial Wiring.

1. Refer to Frame 58. **Note.** *The sealing panel need not be removed.*
2. Swing the control box into its 'servicing' position. Refer to Frame 72, steps 1-4 .
3. Unplug the 'Burner on' neon lead from the PCB. Refer to Frame 72.
4. Prise the neon out of the lens holder.
5. Fit the new neon and re-assemble in reverse order.

74 CONDENSATE SIPHON REPLACEMENT

Refer also to Frame 10 - 'Boiler exploded view'.

1. Refer to Frame 58.
2. Remove the fan unit. Refer to Frame 53.
3. Remove the gas injection pipe. Refer to Frame 67, step 8.
4. Disconnect the ignition and detector leads. Refer to Frame 63.
5. Disconnect the condensate drain from the bottom of the boiler.
6. Undo the siphon union connection.
7. Push the siphon down slightly to clear the union, tilt forward and withdraw it from the boiler.
8. Fit the new siphon and reassemble in reverse order, replacing any damaged or deteriorating sealing gasket.

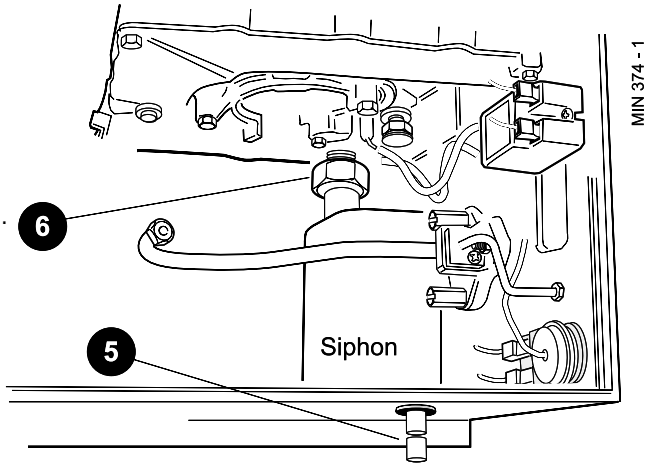

75 HEAT EXCHANGER REPLACEMENT

IMPORTANT. Before starting the removal procedure, protect the gas and electrical controls with a waterproof sheet or plastic bag.

Refer also to Frame 10 - 'Boiler exploded view'.

1. Refer to Frame 58.

2. Drain down the system.

3. Drain the heat exchanger via the drain point, taking care to protect electrical components from water.

4. Remove the fan assembly. Refer to Frame 53.

5. Remove the burner assembly. Refer to Frame 65.

6. Remove the gas injection pipe. Refer to Frame 67.

7. Remove the spark generator. Refer to Frame 64.

8. Remove the back retaining screw.

9. Withdraw the dry fire thermostat phial from its pocket . Refer to Frame 61.

10. Remove the condensate siphon. Refer to Frame 74.

11. Disconnect the flue gas sampling tube from the top of the heat exchanger.

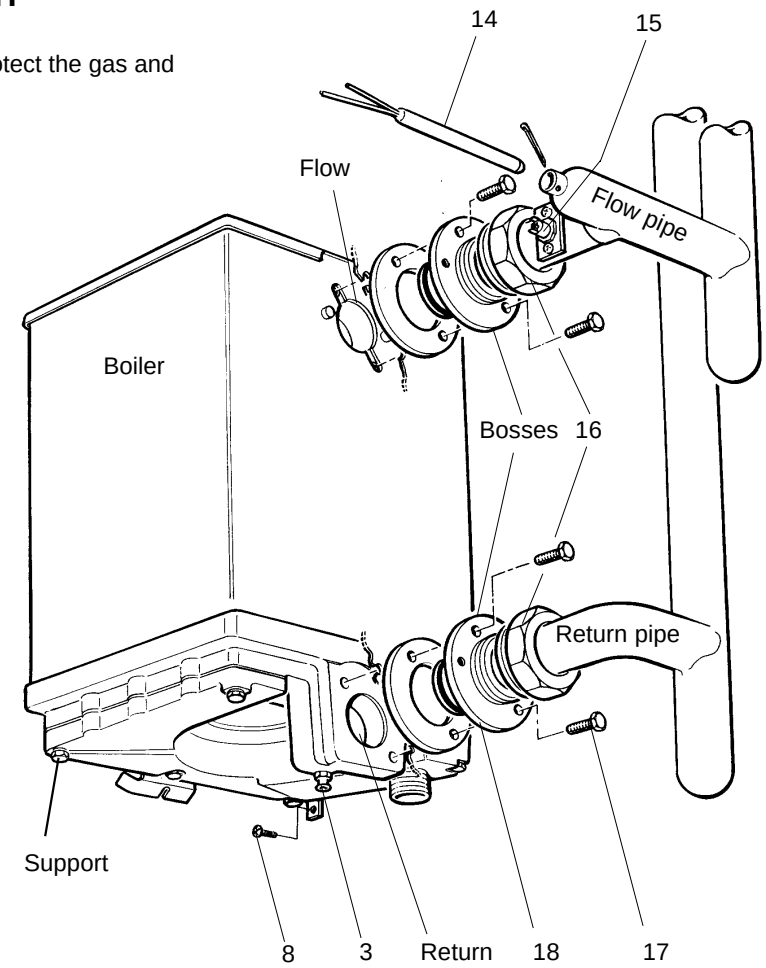

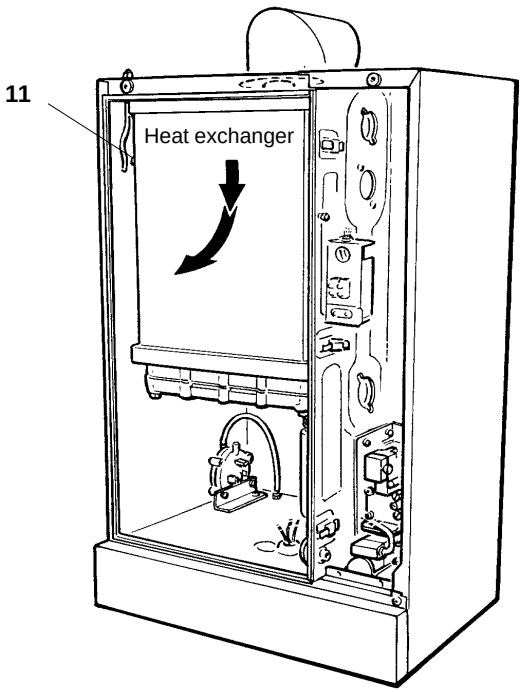

12. Remove the flue thermostat. Refer to Frame 62.

13. Disconnect the boiler flow and return pipes from the system pipework close to the boiler.

14. Remove the control thermostat phial from its pocket. Refer to Frame 59.

15. Disconnect the overheat 'stat electrical leads.

16. Undo the flow and return pipe union nuts and pull the pipes clear of the flow and return bosses.

17. Undo the 4 flow and return boss retaining screws.

18. While supporting the heat exchanger from below, withdraw the bosses from the flow and return tappings.
If necessary, the bosses may be 'jacked' out by screwing the retaining screws into the two threaded holes in each flange.
Check the O rings for damage and replace if necessary.

19. Lower the heat exchanger to disengage from the flue connector tube, and withdraw it from the boiler.

20. Fit the new heat exchanger and re-assemble in reverse order.

IMPORTANT
The flow and return bosses are not common and MUST be refitted in their correct positions.

The FLOW connection boss has a COARSE thread.

The RETURN connection boss has a FINE thread.

76 BOILER SEALING PANEL SEAL REPLACEMENT

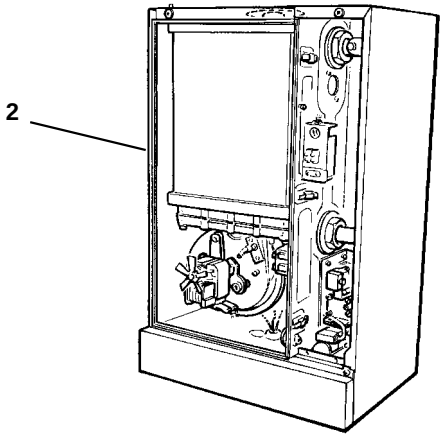

1. Refer to Frame 58.

2. Remove the old seal from the casing and thoroughly clean the casing surfaces.

3. Fit the new self adhesive seals.

4. Re-assemble in reverse order.

Note.
Ensure that the boiler sealing panel is correctly seated, compressing the sealing strip to make an airtight joint.

78 FAULT FINDING CHART

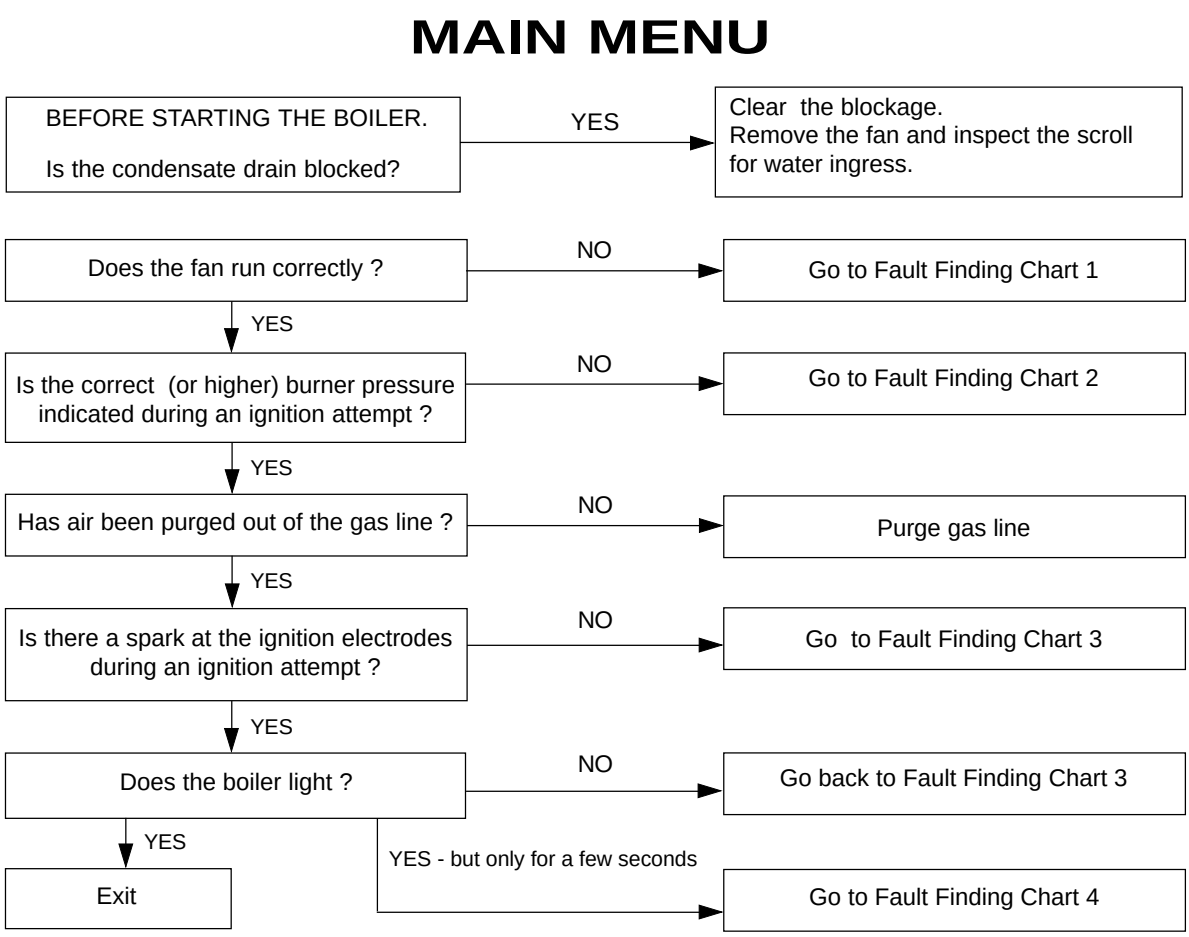

Note.
The correct sequence of operation during ignition is as follows:-

1. Mains to boiler with all boiler thermostats calling for heat.
2. If the fuse on PCB 37 is OK, LEDs 2, 3 and 4 illuminate and the fan starts.
3. After 8 seconds LED 2 goes OFF, the spark starts and the gas valve opens.
4. If a flame is detected the spark stops, LED 2 stays OFF and the 'Burner on' neon lights.
5. If a flame is not detected the spark stops, the gas valve closes, the fan continues to run and LED 2 comes ON.

79 FAULT FINDING CHART 1 - Fan Not Running Correctly

NB: *Mains supply for this boiler is 230 V AC 50 Hz*

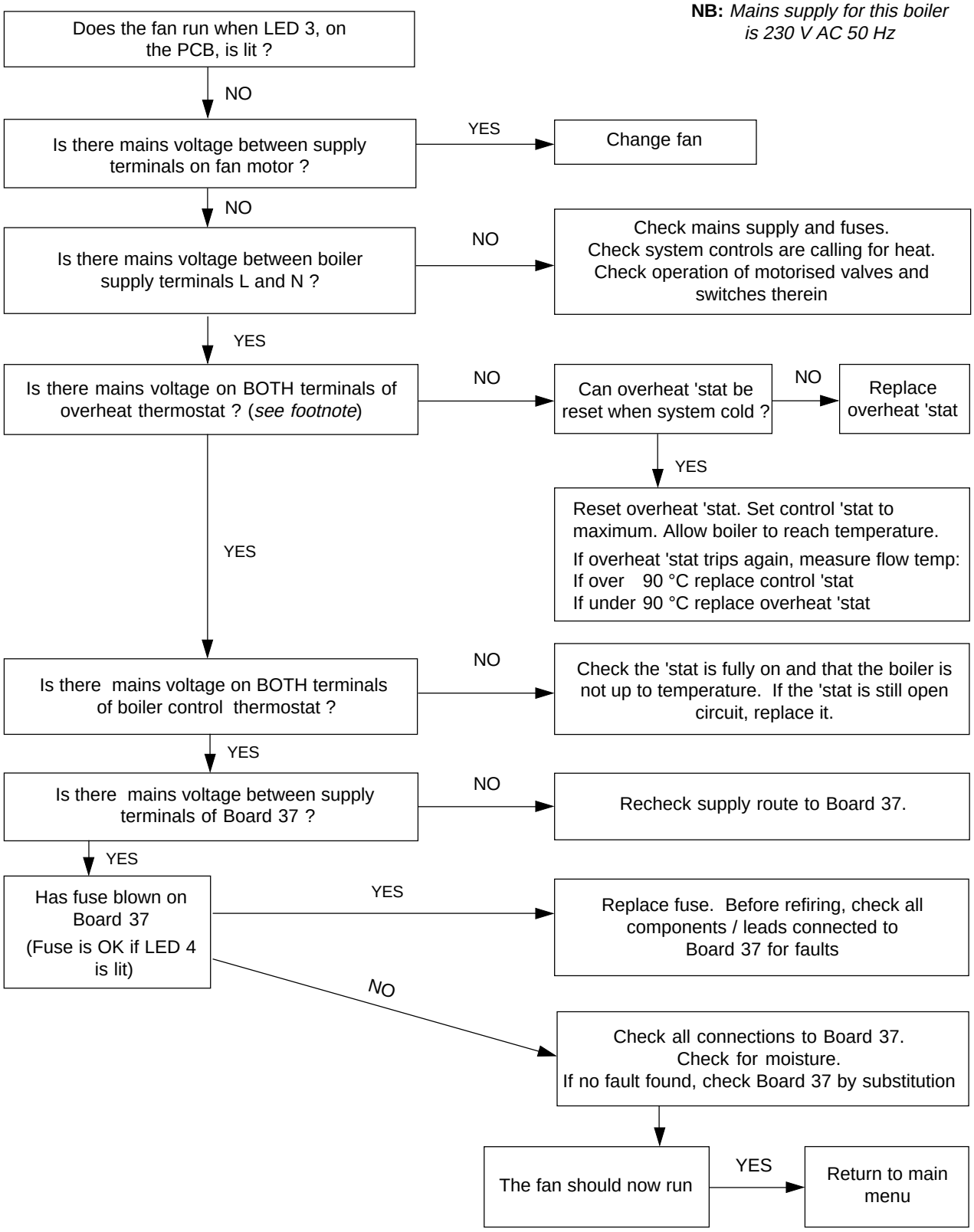

FOOT NOTE.

Presence of live supply on a terminal may be checked with a multimeter set to the appropriate AC range (apply the other probe of the meter to Mains neutral, e.g. on terminal N of the incoming supply).

80 FAULT FINDING CHART 2 - Burner Pressure Incorrect or Zero

Notes. **1.** *The burner pressure is regulated by the gas valve, according to the air flow generated by the fan, and on cold ignition should be slightly higher than the value quoted on the Data badge.*

2. *Equilibrium fan pressures should be as follows:* (± 0.2 mbar) with 300mm flue length

Boiler	Pressure mbar	Boiler	Pressure mbar	Boiler	Pressure mbar
SE 30 FF	1.7	SE 50 FF	1.7	SE 70 FF	1.1
SE 40 FF	1.9	SE 60 FF	2.0	SE 80 FF	1.9

To check the pressure connect an inclined gauge manometer to test points (G) and (I). Refer to Frame 47

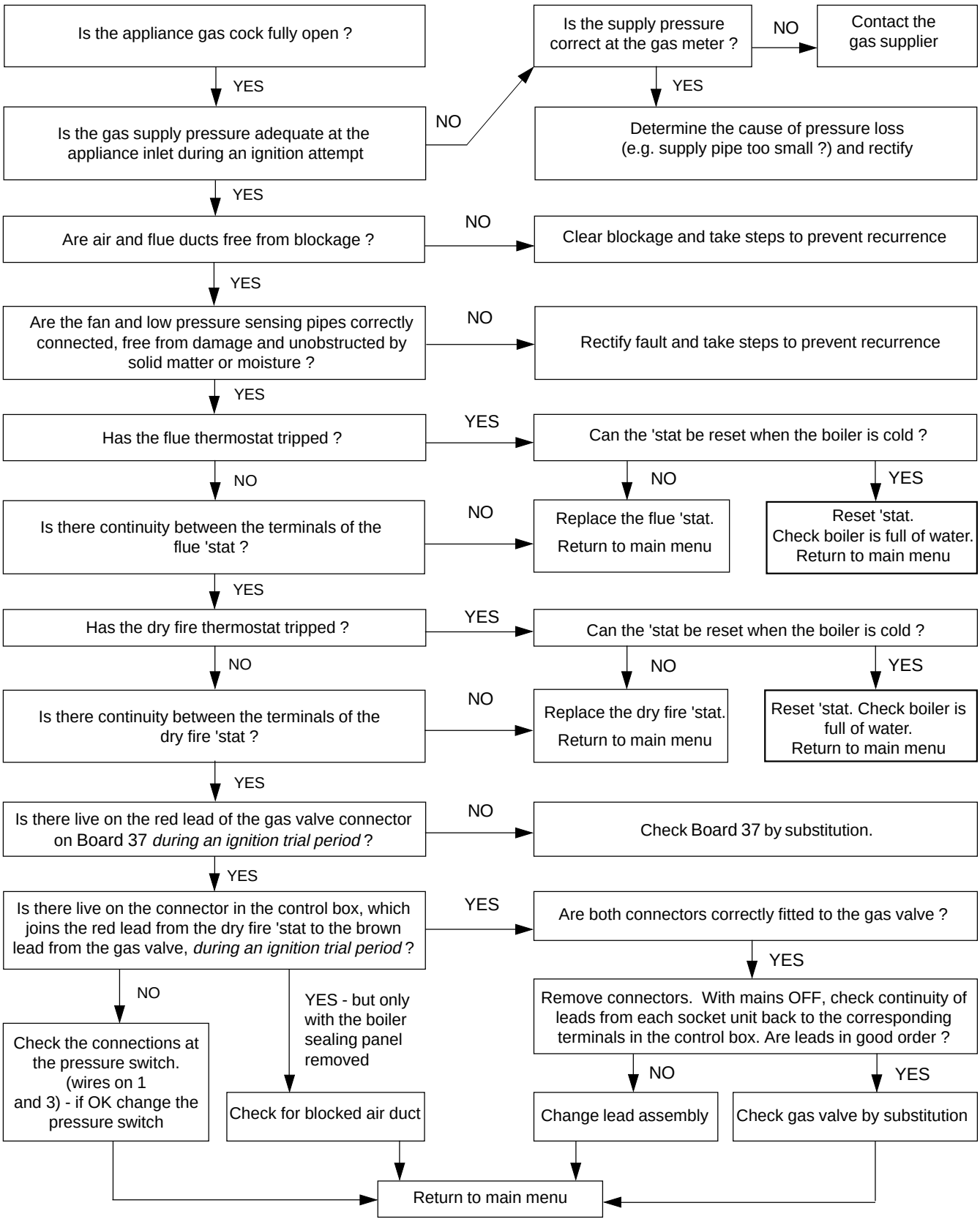

81 FAULT FINDING CHART 3 - Spark Generation and Ignition

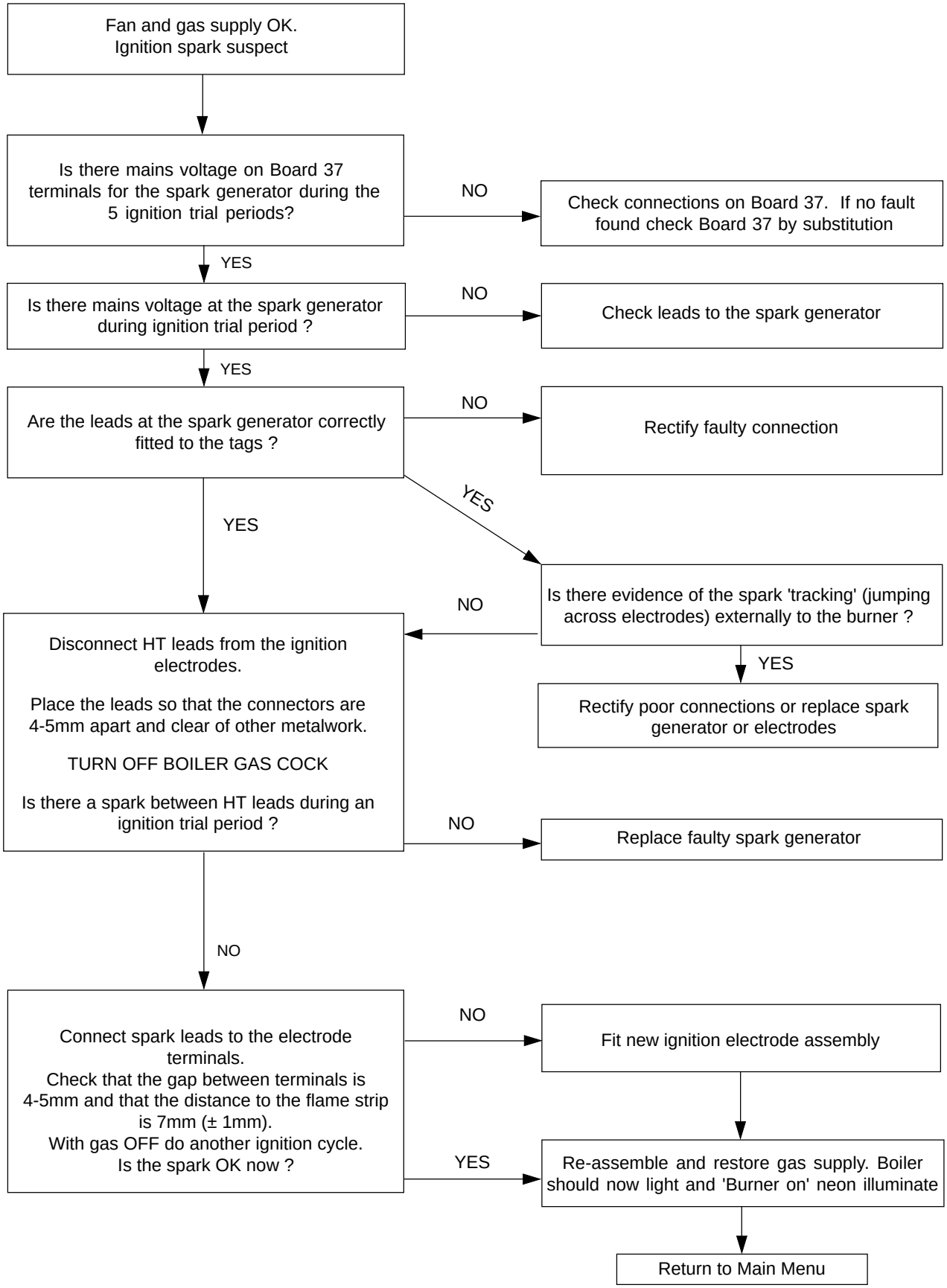

82 FAULT FINDING CHART 4 - Flame Detection

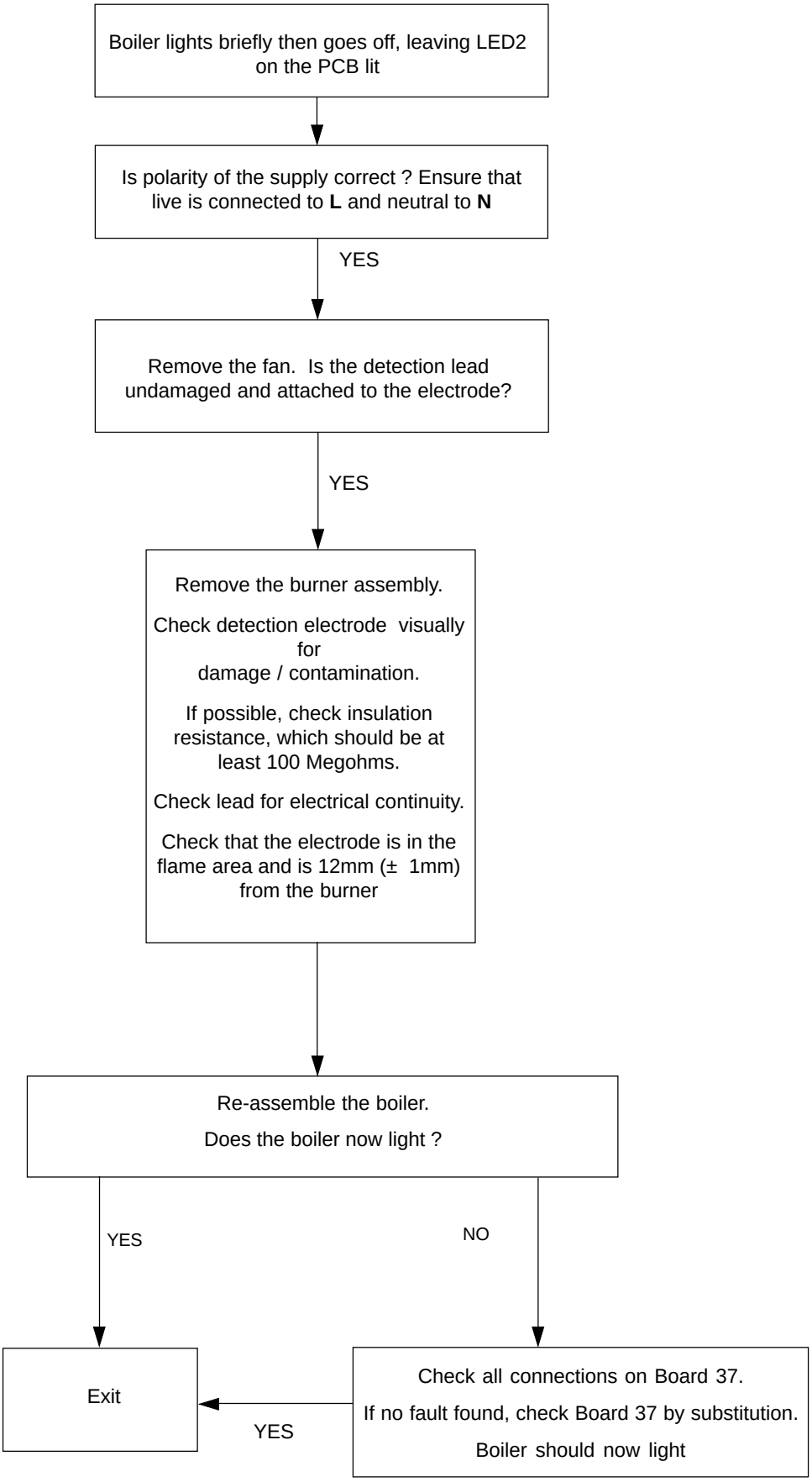

SHORT LIST OF PARTS

The following are parts commonly required as replacements, due to damage or expendability. Their failure or absence is likely to affect the safety and/or performance of this appliance.

The list is extracted from the British Gas List of Parts which contains all available spare parts.

The full list is held by British Gas, **Caradon Plumbing Ltd** distributors and merchants.

When ordering spares please quote:

1. Boiler model.
2. Appliance G.C. number.
3. Description.
4. Quantity.
5. Product No.

Key No.	G.C. Part No.	Description	Qty.	Product No.
1		Main burner		
	E06 133	Bray No. AB 6700 SE 30 FF	1	152 530
	E06 134	Bray No. AB 6703 SE 40 FF	1	152 531
	E06 135	Bray No. AB 6701 SE 50 FF	1	152 532
	E06 136	Bray No. AB 6704 SE 60 FF	1	152 533
	E06 137	Bray No. AB 6702 SE 70 - 80 FF	1	152 534
2		Main burner injector		
	398 043	Bray Cat. 10 size 800 SE 30 FF	1	004 858
	393 050	Bray Cat. 10 size 1150 SE 40 FF	1	003 205
	390 058	Bray Cat. 10 size 1600 SE 50 FF	1	003 362
	398 059	Bray Cat. 10 size 1700 SE 60 FF	1	004 305
	389 601	Bray Cat. 10 size 3000 SE 70 FF	1	112 935
	389 600	Bray Cat. 10 size 2700 SE 80 FF	1	112 936
3	E06 390	Gas control valve - SIT NOVAMIX 0828113	1	075 025
4	308 587	Control box, including control thermostat, printed circuit board and 'Burner on' neon	1	011 781
5	E01 997	Flame detection electrode and gasket:		
		BUCCLEUCH BE/3543/SI)	1	075 162
6	E01 972	Ignition electrode and gasket - BUCCLEUCH BE/3545/SI	1	075 269
7	308 590	'Burner on' neon assembly - READILEADS	1	138 139
8	378 931	Pressure switch - SIT.0380.064	1	112 417
9	378 932	Automatic ignition printed circuit board - PACTROL PCB No.37	1	111748
10	308 556	Spark generator assembly - PACTROL	1	112 216
11	378 933	Control thermostat - RANCO K36P1331	1	111 853
12	382 873	Overheat thermostat - ELMWOOD 2455 RM-98727	1	076 817
13	378 934	Dry fire thermostat - RANCO LM7 P5077	1	111 854
14	378 935	Flue thermostat - ELMWOOD	1	138 097
15	308 591	Siphon assembly - ALTEKNIC	1	076 819
16	308 557	Control thermostat knob	1	111 904
17	308 558	Fan assembly - SIFAN No. WFFB 0226 018 SE 30 FF	1	138 125
	308 559	SIFAN No. WFFB 0226 018 SE 40 FF	1	138 126
	308 560	SIFAN No. WFFB 0226 019 SE 50 FF	1	138 127
	308 561	SIFAN No. WFFB 0226 019 SE 60 FF	1	138 128
	308 562	SIFAN No. WFFB 0226 020 SE 70 FF	1	138 129
	308 563	SIFAN No. WFFB 0226 020 SE 80 FF	1	138 130
18		Boiler front panel, painted white with bottom trim	1	154 099
19		Controls pod door, painted white	1	170 686
20	308 566	Boiler bottom panel, painted white	1	076 821
21		Control panel, painted white	1	170 687
22	308 567	Casing seals: Long (sides) Short (top, bottom)	1	076 823
23	E06 391	Low pressure sensing pipe assy.	1	075 021
24	308 569	Fan pressure sensing pipe	1	076 902

83 BURNER ASSEMBLY - Exploded view

LEGEND

A. 'O' ring

B. Gasket

1. Burner

2. Burner injector

3. Gas valve

5. Detection electrode

6. Ignition electrode

17. Fan

23. Low pressure sensing pipe

24. Fan pressure sensing pipe

37. Gas valve mounting bracket

40. Sensing pipe clamping plate

42. Burner mounting flange

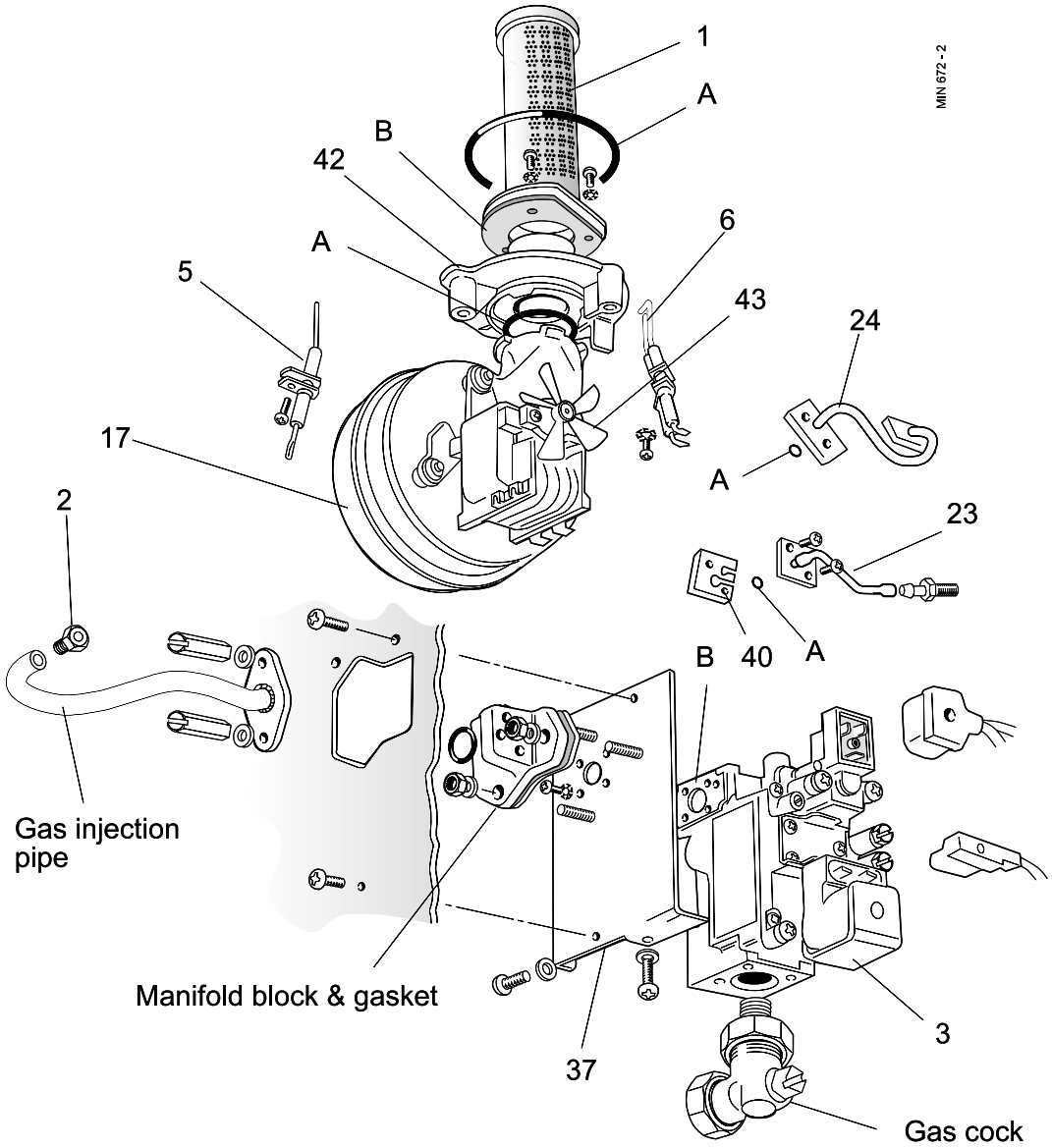

84 CONTROL BOX ASSEMBLY - Exploded view

LEGEND

4. Control box.

7. 'Burner on' neon & harness.

9. Printed circuit board No. 37.

11. Boiler control thermostat.

16. Thermostat knob.

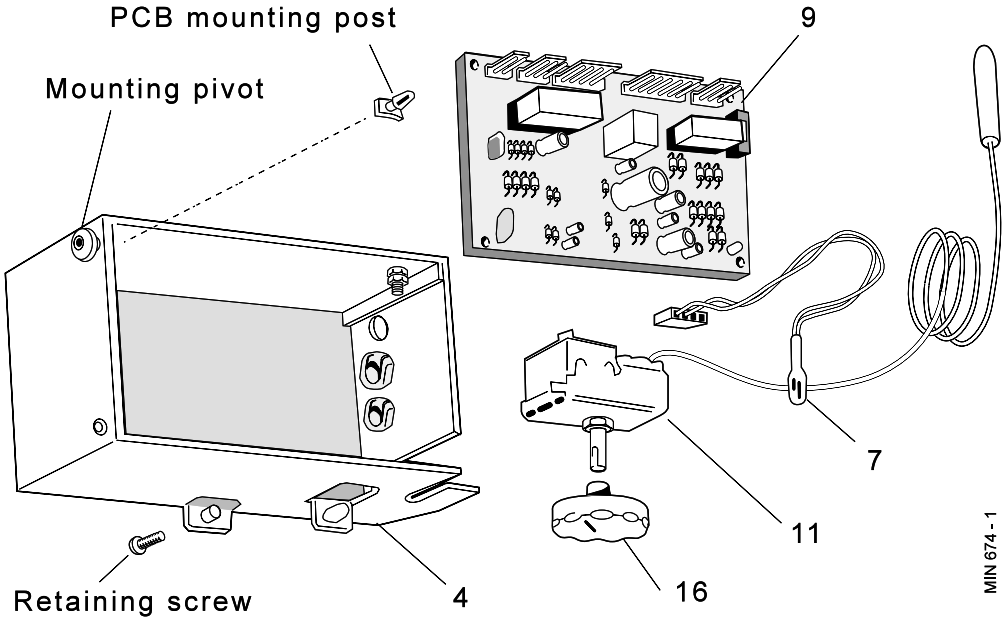

SHORT LIST OF PARTS

85 SHORT PARTS

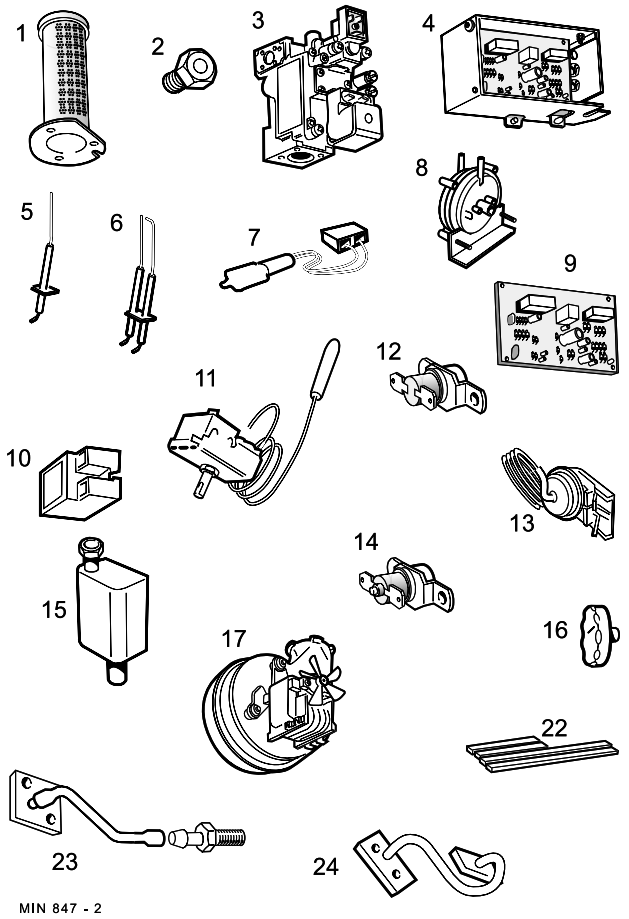

86 BOILER CASING ASSEMBLY

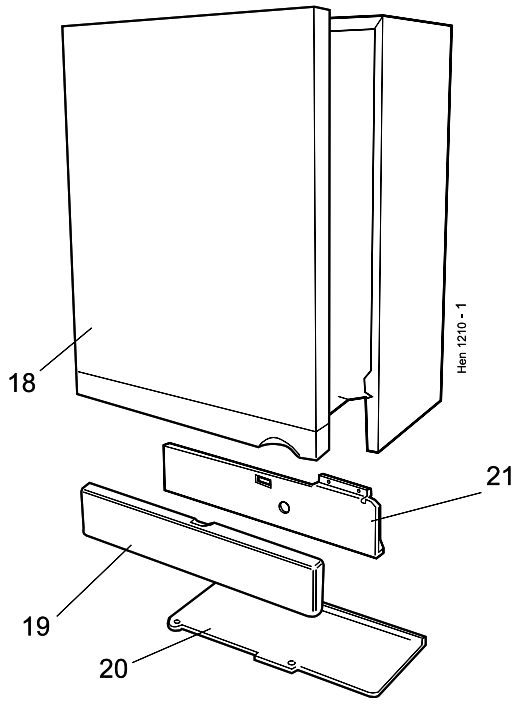

Caradon Plumbing Limited, P.O. Box 103, National Ave, Kingston upon Hull, HU5 4JN. Telephone: 01482 492 251 Fax: 01482 448 858. Registration No. London 322 137. Registered Office: National Avenue, Kingston upon Hull, HU5 4JN. *A subsidiary of Caradon p.l.c*

Technical Training

The Caradon Plumbing Limited Training Centre offers a series of first class training courses for domestic, commercial and industrial heating installers, engineers and system specifiers. For details of courses please ring: 01270 413 624

Caradon Plumbing Limited pursues a policy of continuing improvement in the design and performance of its products. The right is therefore reserved to vary specification without notice.

December 1999 UIN 153 960 A02

HENRAD

Henrad Installer/Technical Helpline Tel: 01482 498663

Your feedback
and your chance to win a free boiler

At Henrad we've been leaders in the design and engineering of robust and reliable boilers for over 90 years. We want to continue as leaders by listening to your suggestions for how to improve our boilers and our service. We'll be giving away a free boiler for the five best ideas every year (to be selected by our Technical Director). Please complete this form, using extra sheets if required, and post it or fax it to us on 01482 498699.

Boiler details

Model / Size (details on control panel door)

Date of Installation

Installer details

Name

Address

Post Code

Telephone (*Please include STD code*)

How I would improve this boiler:

My general comments for Henrad:

Caradon
Plumbing Solutions

Henrad Installer/Technical Helpline Tel: 01482 498663

Further information

If you would like information about Henrad Boilers please complete this sheet and fax it to us on 01482 498699 or post it to Caradon Plumbing Limited, PO Box 103, National Avenue, Kingston upon Hull, HU5 4JN.

Installer details

Name

Address

Post Code

Telephone (*Please include STD code*)

General information required

- ☐ *Please send me details of Henrad Training Courses.*
- ☐ *Please arrange for a technical representative to contact me.*
- ☐ *Please arrange for me to join a Henrad factory tour.*

Range guides required

- ☐ *The Henrad Guide: a specifier's and installer's introduction to the Henrad domestic boiler range.*
- ☐ *The Henrad Householders Guide: to assist the installer when presenting to his/her customers.*

Technical manuals required

- ☐ *The Henrad C FF combi boilers*
- ☐ *The Henrad WH FF wall hung boiler*
- ☐ *The Henrad WH LX FF deluxe wall hung boiler*
- ☐ *The Henrad FS FF floor standing boiler*
- ☐ *The Henrad SE FF heat-saving boiler*
- ☐ *The Henrad CC FF combi boiler*
- ☐ *The Henrad SEC FF super efficiency combi boiler*

Caradon
Plumbing Solutions

Caradon Plumbing Ltd., PO Box 103, National Avenue, Kingston upon Hull, HU5 4JN. Telephone: 01482 492251 Fax: 01482 448858.

Henrad Installer/Technical Helpline Tel: 01482 498663

UIN. 153 960 A0