THE HENRAD INSTALLATION & SERVICING MANUAL

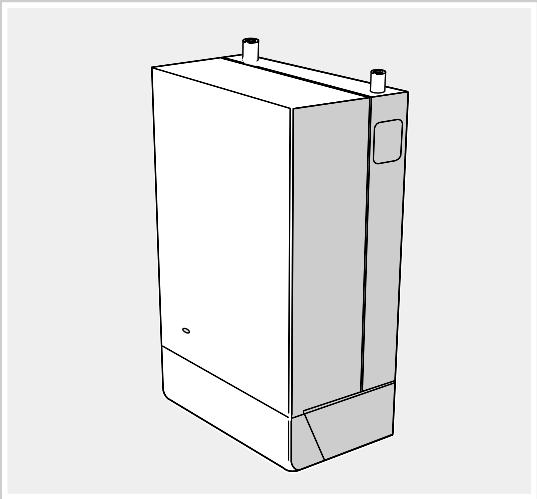

Henrad

the wall hung boiler

**Wall hung,
fanned flued,
gas fired boiler**

WH LX 30-80 FF

WH 30-100 FF

HENRAD

Installers guide to domestic central heating boilers

CAUTION. To avoid the possibility of injury during the installation, servicing or cleaning of this appliance, care should be taken when handling edges of sheet steel components.

GENERAL

Table 1 - General Data

Boiler Size			30 FF	40 FF	50 FF	60 FF	70 FF	80 FF	100 FF
Gas supply connection		(in. BSP)	Rc 1/2 (1/2) 1/2" (BSP Female)						
Flow connection			22mm copper				28mm copper (FEMALE)		
Return connection			22mm copper				28mm copper (FEMALE)		
Maximum static water head		m (ft.)	30.5 (100)						
Minimum static water head		m (ft.)	0.45 (1.5)						
Electrical supply			230 V 50 Hz Boiler power consumption; 100W						
Fuse rating			External; 3A Internal; F1A to BS.4265						
Water content		litre (gal.)	2.7 (0.6)		3.65 (0.8)		4.65 (1.0)		4.65(1.0)
Dry Weight	Standard Model	kg (lb)	40.9 (90.3)		46.6 (102.8)		52.6 (116.0)		52.6(116)
	Deluxe (LX) Model	kg (lb)	43.9 (96.8)		49.6 (109.4)		55.6 (122.6)		N/A
Maximum installation weight kg (lb)		31.4 (69.3)	37.4 (82.5)		43.1 (95)		43.1(95)		
Boiler size	Height	mm (in.)	700 (27.5)						
	Width	mm (in.)	380 (15.0)						
	Depth	mm (in.)	Deluxe model (LX) 315 (12 3/8)						N/A
			Standard model 300 (11.8)						
Flue duct diameter		mm (in.)	100 (4.0)						
Flue duct length (max)		m (ft)	3 (9.8)						0.6 (2)

Table 2 - Performance Data

Boiler Size			30 FF	40 FF	50 FF	60 FF	70 FF	80 FF	100 FF
Boiler input	MINIMUM	kW	5.6	11.3	15.0	18.5	22.5	26.3	31.6
(Gross)		Btu/h x 1000	19.1	38.5	51.2	63.3	76.9	89.7	107.8
	Gas consumption	l/s	0.15	0.29	0.38	0.49	0.58)	0.67	0.80
		ft^3/h	19.4	37.1	48.7	62.9	73.1	86.3	101
	MID	kW	8.3	13.0	16.7	20.3	24.0	27.8	34.2
		Btu/h x 1000	28.5	44.3	56.85	69.2	82.0	94.9	116.7
	Gas consumption	l/s	0.22	0.34	0.43	0.53	0.62	0.71	0.87
		ft^3/h	28.1	42.7	54.5	67.6	78.8	91.3	110.0
	MAXIMUM	kW	11.0	14.7	18.3	22.0	25.6	29.3	36.6
		Btu/h x 1000	37.5	50.0	62.5	75.0	87.5	100.0	125.0
	Gas consumption	l/s	0.28	0.38	0.47	0.57	0.66	0.76	0.95
		ft^3/h	36.1	48.2	60.2	72.3	84.3	96.3	121
Boiler output	MINIMUM	kW	4.4	8.8	11.7	14.7	17.6	20.5	24.9
		Btu/h x 1000	15	30	40	50	60	70	85
	MID	kW	6.6	10.3	13.2	16.1	19.0	22.0	27.1
		Btu/h x 1000	22.5	35	45	55	65	75	92.5
	MAXIMUM	kW	8.8	11.7	14.7	17.6	20.5	23.4	29.3
		Btu/h x 1000	30	40	50	60	70	80	100
Burner Setting pressure (HOT)	MINIMUM	mbar (in.w.g.)	3.5 (1.4)	8.5 (3.4)	9.5 (3.8)	12.0 (4.8)	12.5 (5.0)	12.1 (4.8)	10.4 (4.2)
	MID	mbar (in.w.g.)	7.5 (3.0)	11.5 (4.6)	11.5 (4.6)	14.1 (5.6)	14.9 (6.0)	13.9 (5.6)	12.3 (4.9)
	MAXIMUM	mbar (in.w.g.)	13.2 (5.3)	14.5 (5.6)	13.5 (5.4)	16.5 (6.6)	16.5 (6.6)	16.0 (6.4)	14.5 (5.8)
Seasonal efficiency (SEDBUK)			[76.2]%	[75.8]%	[76.2]%	[76.7]%	[77.1]%	[76.0]%	[76.4]%

*The value is used in the UK government's Standard Assessment Procedure (SAP) for energy rating of dwellings.
The test data from which it has been calculated have been certified by BGplc 0087

Note. *Gas consumption is calculated using a calorific value of 38.7 MJ/m³ (1038 Btu/ft³) gross or 34.9 MJ/m³ (935 Btu/ft³) nett*

To obtain the gas consumption at a different calorific value:-

a. ***FOR L/S*** *- divide the gross heat input (kW) by the gross C.V. of the gas (MJ/m³)*

b. ***FOR FT³/H*** *- divide the gross heat input (Btu/h) by the gross C.V. of the gas (Btu/ft³)*

WH LX FF & FF

B.G. Certified - P.I. No. 87 AP 107

Destination Countries: GB and IE

Natural Gas only Appliance type: C_{12} & C_{32}

Data badge - top of controls support.

Deluxe models	G.C. Appliance No.
WH LX 30 FF	41 349 94
WH LX 40 FF	41 349 95
WH LX 50 FF	41 349 96
WH LX 60 FF	41 349 97
WH LX 70 FF	41 349 98
WH LX 80 FF	41 349 99

Standard models	G.C. Appliance No.
WH 30 FF	41 349 87
WH 40 FF	41 349 88
WH 50 FF	41 349 89
WH 60 FF	41 349 90
WH 70 FF	41 349 91
WH 80 FF	41 349 92
WH 100 FF	41 349 93

(WH 100 FF is a type C_{12} appliance only)

Deluxe Model (LX)

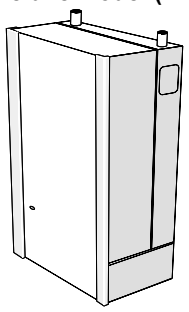

Standard Model

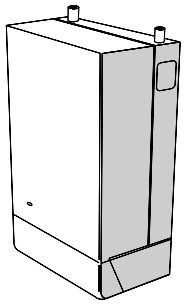

Key to symbols

IE = Ireland

GB = United Kingdom (Countries of destination)

PMS = Maximum operating pressure of water

C_{12} & C_{32} =

A room sealed appliance designed for connection via ducts to a horizontal or vertical terminal, which admits fresh air to the burner and discharges the products of combustion to the outside through orifices which, in this case, are concentric. The fan is down stream of the combustion chamber.

I_{2H} = An appliance designed for use on 2nd Family gas, Group H only.

CONTENTS

Air Supply 8

Boiler Clearances 6

Boiler Exploded View 10

Burner Exploded View 35

Control Box Exploded View 35

Electrical Connections 21

Electrical Regulations 8

Extension Ducts - Fitting 19

External Control 21

Fault Finding 33

Flue Installation 7
- **Rear installation** 13
- **Side installation** 16

Gas Safety 5

Gas Supply 7

Initial Lighting 24

Installation 10

Mandatory Requirements 5

Pump 9

Servicing 26

Short List of Parts 34

Spares Replacement 28

System Diagrams 22

Terminal Guards 7

Water and Systems 8

WaterTreatment 8

NOTE TO THE INSTALLER: LEAVE THESE INSTRUCTIONS ADJACENT TO THE GAS METER. ALSO COMPLETE THE BENCHMARK LOG BOOK AND GIVE THIS TO THE CUSTOMER.

benchmark™

INTRODUCTION

The WH 30 FF-100 FF (standard) and the **WH LX 30 FF-80 FF** (deluxe casing) is a range of automatically fully controlled, wall mounted, balanced flue, fanned gas boilers.

The heat exchanger is cast iron. The boiler casing is of white enamelled mild steel.

WH 30 FF-100 FF (Standard Model)

The boiler casing has a removable controls pod containing a drop-down door. The boiler thermostat is located behind the drop- down door.

WH LX 30-80 FF (Deluxe Model LX)

The boiler casing is fitted with a glass fascia. The glass fascia can be lifted up to gain access to the boiler thermostat.

All details for the deluxe casing model are the same as the standard model unless otherwise stated.

Note. *These boilers cannot be used on systems which include gravity circulation.* If gravity circulation is required the WH RS range of boilers is suitable.

See Frame 1 for details of the correct boiler tappings to use.

The boilers are supplied with a standard flue kit suitable for rear or side outlet applications from 114 mm (4 1/2") to 600 mm (23 1/2").

The boilers are suitable for connection to the following open vented or sealed systems:

- Fully pumped CH and indirect DHW
- Pumped heating only.
- Pumped indirect DHW only.

OPTIONAL EXTRA KITS

Downward Piping Kit.

Roof Flue Kit.*

90° Flue Elbow Kit.*

Extension ducts* Up to 3m (118").

* Not available for 100 FF

GAS SAFETY (INSTALLATION AND USE) Regulations, 1994, amendments 1996 or the rules in force.

It is law that **all** gas appliances are installed by a CORGI registered installer (identified by ❀) in accordance with the above regulations. Failure to install appliances correctly could lead to prosecution. It is in your own interest, and that of safety, to ensure the law is complied with.

The installation of the boiler MUST also be in accordance with the latest I.E.E (BS.7671) Wiring Regulations, local building regulations, bylaws of the local water authority, the Building Regulations and Building Standards (Scotland) and any relevant requirements of the local authority. Detailed recommendations are contained in the following British Standard Codes of Practice:

BS.6891	Low pressure installation pipes.
BS.6798	Installation of gas fired hot water boilers of rated input not exceeding 60 kW.
BS.5449	Forced circulation hot water systems.
BS.5546	Installation of gas hot water supplies for domestic purposes (2nd Family Gases).
BS.7593	Treatment of water in domestic hot water central heating systems.
BS.5440.1	Flues for gas appliances of rated input not exceeding 60 kW.
BS.5440.2	Ventilation for gas appliances of rated input not exceeding 60 kW.

Health & Safety Document No. 635

The Electricity at Work Regulations, 1989.

Manufacturer's notes must NOT be taken in any way as overriding statutory obligations.

IMPORTANT. These appliances are certificated by the British Standards Institution for safety and performance. It is, therefore, important that no external control devices, e.g. flue dampers, economisers etc., are directly connected to these appliances - unless covered by these Installation and Servicing instructions or otherwise recommended by **Caradon Plumbing Limited** in writing.
If in doubt please enquire.

Any direct reconnection of a control device not approved by **Caradon Plumbing Limited** could invalidate the BSI Certification and the normal appliance warranty. It could also infringe the Gas Safety Regulations and the above regulations.

LOCATION OF BOILER

The boiler must be installed on a flat and vertical wall, capable of adequately supporting the weight of the boiler and any ancillary equipment.

The boiler may be fitted on a combustible wall and insulation between the wall and the boiler is not necessary - unless required by the local authority. **The boiler must not be fitted outside.**

Timber Framed Buildings

If the boiler is to be fitted in a timber framed building it should be fitted in accordance with the Institute of Gas Engineering document IGE/UP/7:1998.

1 BOILER WATER CONNECTIONS

This appliance in NOT suitable for use in a direct hot water system or for gravity circulation.

70 FF, 80 FF & 100 FF ONLY

must be fitted with the 22mm x 28mm copper sockets, provided in the Hardware Pack, (or equivalent 22mm x 28mm compression fittings) and the pumped flow and return pipes run in 28mm pipe.

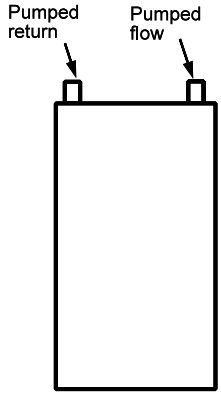

2 BOILER CLEARANCES

The following minimum clearances must be maintained for operation and servicing.

Additional space will be required for installation, depending upon site conditions.

Side and Rear Flue

a. Provided that the flue hole is cut accurately, e.g. with a core drill, the flue can be installed from inside the building.

Installation from inside ONLY

b. If a core boring tool is to be used inside the building; the space in which the boiler is to be installed must be at least wide enough to accommodate the tool.

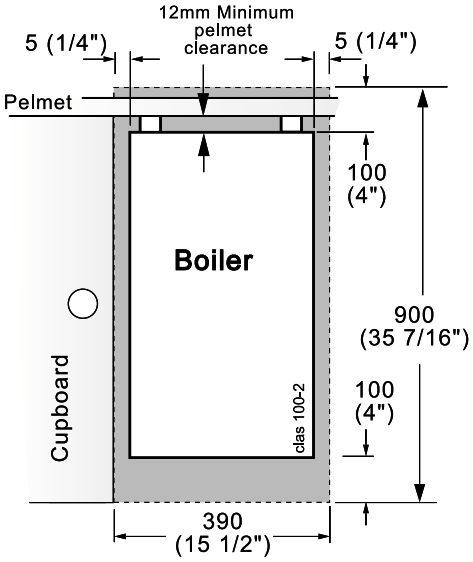

Front clearance: 450mm (17 3/4") from the front of the boiler casing.

Minimum front clearance when built in to cupboard is 75 mm (3").

Pelmet restrictions.

If the ability to fit or remove the casing during installation and subsequent servicing is impaired by pelmets etc. this operation can be made easier by first removing the controls pod casing in line with the following instructions:

a. Release the controls pod casing fixing screws (a) 3 full turns only. Remove the pod by pulling it forward to disengage from the keyhole slots.

b. Undo the 2 screws (b) retaining casing to the back panel.

c. The casing can now be removed in the direction of the arrow, first lifting the casing slightly to disengage the casing top return from the back panel. (For this purpose a minimum clearance of 12mm is required between the top of the boiler and pelmet or other similar obstruction.

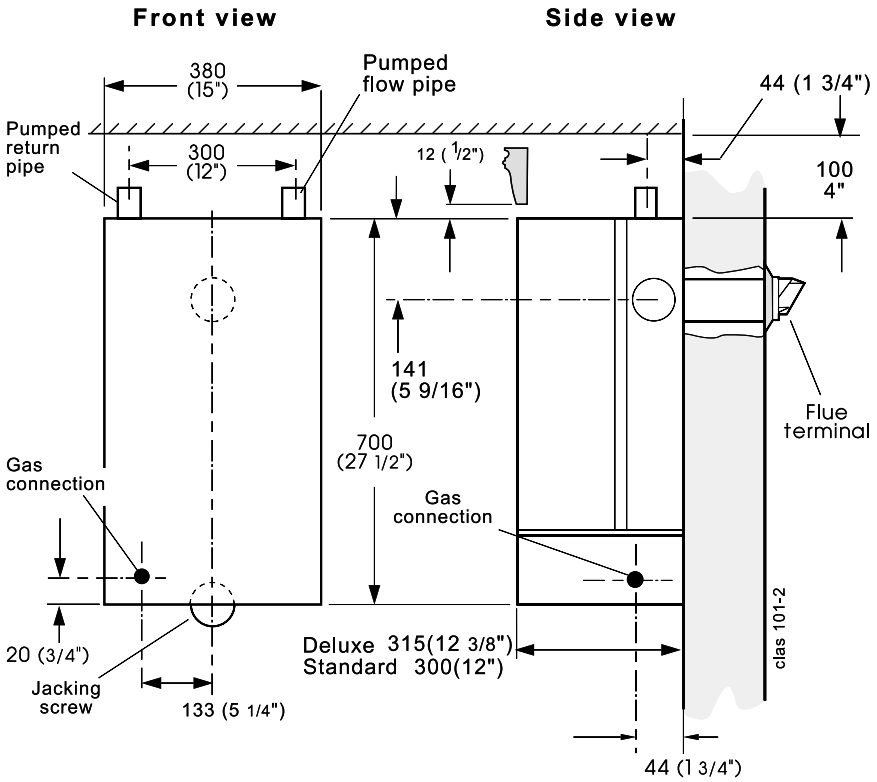

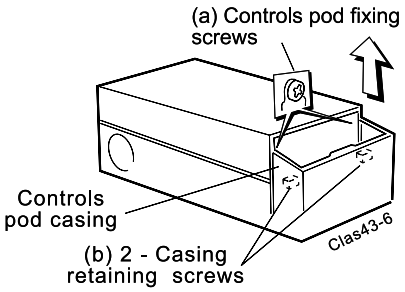

Bathrooms

The boiler may be installed in any room or internal space, although particular attention is drawn to the requirements of the current I.E.E. (BS.7671) Wiring Regulations and, in Scotland, the electrical provisions of the building regulations applicable in Scotland with respect to the installation of the boiler in a room or internal space containing a bath or shower.

Where a room-sealed appliance is installed in a room containing a bath or shower then the appliance and any electrical switch or appliance control utilising mains electricity should be so situated that it cannot be touched by a person using the bath or shower.

Where installation will be in an unusual location, special procedures may be necessary and BS.6798 gives detailed guidance on this aspect.

Compartment Installations

A compartment used to enclose the boiler MUST be designed and constructed specially for this purpose.
An existing cupboard or compartment may be used, provided it is modified for the purpose.

In both cases details of essential features of cupboards/ compartment design, including airing cupboard installation, are to conform to the following :

- BS. 6798.
- The position selected for installation MUST allow adequate space for servicing in front of the boiler and for air circulation around the boiler. Refer to 'Air Supply' on page 8.
- For the minimum clearances required for safety and subsequent service refer to the Wall mounting diagram, Frame 2. In addition, sufficient space may be required to allow lifting access to the wall mounting plate.

GAS SUPPLY

The local gas supplier should be consulted, at the installation planning stage, in order to establish the availability of an adequate supply of gas. An existing service pipe must NOT be used without prior consultation with the local gas supplier.

A gas meter can only be connected by the local gas supplier or by a local regional contractor.

An existing meter should be checked, preferably by the gas supplier, to ensure that the meter is adequate to deal with the rate of gas supply required. A MINIMUM pressure of 20 mbar MUST be available at the boiler inlet with the boiler operating.

Installation pipes MUST be fitted in accordance with BS. 6891. Pipework from the meter to the boiler MUST be of an adequate size. 100 FF models should be piped in 22mm minimum. The final 1metre may be run in 15mm if it is visible.

The complete installation MUST be tested for gas soundness and purged as described in the above code.

FLUE INSTALLATION

The flue must be installed in accordance with the recommendations of BS. 5440:1. The following notes are intended for general guidance:-

1. The boiler MUST be installed so that the terminal is exposed to external air.
2. It is important that the position of the terminal allows the free passage of air across it at all times.
3. Minimum acceptable spacing from the terminal to obstructions and ventilation openings are specified in Table 3.

Table 3 - Balanced flue terminal position

Terminal Position	Minimum Spacing
1. Directly below or alongside an opening window, air vent or other ventilation opening	300 mm (12")
2. Below guttering, drain pipes or soil pipes	25 mm (1")
3. Below eaves	25 mm (1")
4. Below balconies or a car port roof	25 mm (1")
5. From vertical drain pipes or soil pipes	25 mm (1")
6. From internal or external corners	25 mm (1")
7. Above adjacent ground, roof or balcony level	300 mm (12")
8. From a surface facing the terminal	600 mm (24")
9. From a terminal facing a terminal	1200 mm (48")
10. From an opening in a car port (e.g. door or window) into dwelling	1200 mm (48")
11. Vertically from a terminal on the same wall	1500 mm (60")
12. Horizontally from a terminal on the wall	300 mm (12")

4. Where the lowest part of the terminal is fitted less than 2m (6'6") above a balcony, above ground or above a flat roof to which people have access then the terminal MUST be protected by a purpose designed guard. The minimum spacing in Table 3, Nos. 2, 3, 4, 5 and 6 would be 75mm, in order to allow a terminal guard to be fitted.

   Terminals guards are available from boiler suppliers - ask for Tower Flue Guard, Model K1. In case of difficulty seek advice from:

   Tower Flue Components Ltd.,
   Vale Rise, Tonbridge, Kent TN9 1TB (Model K1)
   Telephone No. 01732 351 555

   Ensure that the guard is fitted centrally.

5. Where the terminal is fitted within 1000mm (39 1/2") of a plastic or painted gutter or 500mm (19 1/2") of painted eaves then an aluminium shield at least 1000mm (39 1/2") long should be fitted to the underside of the gutter or painted surface.
6. The air inlet/products outlet duct and the terminal of the boiler MUST NOT be closer than 25mm (1") to combustible material. Detailed recommendations on the protection of combustible material are given in BS.5440: 1990.
7. Where it is essential that the terminal wall plate is fitted, i.e. wall thicknesses over 600mm (23 1/2") or with an inaccurately cut hole, the minimum spacing in Table 3 Nos. 2,3, 4, 5 and 6 would be 60mm (2 1/2") in order to allow the terminal wall plate to be fitted.

IMPORTANT. It is absolutely ESSENTIAL to ensure, in practice, that products of combustion discharging from the terminal cannot re-enter the building or any other adjacent building through ventilators, windows, doors, other sources of natural air infiltration, or forced ventilation/air conditioning.

If this should occur, the appliance MUST be turned OFF, labelled 'unsafe' and corrective action taken.

TERMINAL

The terminal assembly can be adapted to accommodate various wall thicknesses. Refer to Frame 8.

AIR SUPPLY

Detailed recommendations for air supply are given in BS.5440:2.

The following notes are for general guidance:

1. It is NOT necessary to have a purpose provided air vent in the room or internal space in which the boiler is installed.
2. If the boiler is to be installed in a cupboard or compartment, permanent air vents are required (for cooling purposes) in the cupboard/compartment, at both high and low levels. The air vents must either communicate with room/internal space, or be direct to outside air. The minimum effective areas of the permanent air vents, required in the cupboard/compartment, are specified as follows and are related to maximum rated heat input.
3. Both air vents MUST communicate with the same room or internal space or MUST be on the same wall to outside air.
4. In siting the air vents care must be taken to avoid the freezing of pipework.

Table 4 - High and low vent areas

Boiler	Air from room/internal space, cm (in^2)		Air direct from outside, cm (in^2)	
30 FF	102	(16)	51	(8)
40 FF	135	(21)	68	(11)
50 FF	170	(26)	83	(13)
60 FF	198	(31)	102	(16)
70 FF	231	(36)	116	(18)
80 FF	264	(41)	132	(21)
100 FF	340	(52)	170	(26)

WATER CIRCULATION SYSTEM

The boiler must NOT be used for direct hot water supply. For the types of system and correct piping procedure refer to 'Introduction' and Frame 1.

The central heating system should be in accordance with BS.6798 and, in addition, for Smallbore and Microbore systems, BS. 5449.

The domestic hot water system, if applicable, should be in accordance with the relevant recommendations of BS. 5546. Copper tubing to BS. 2871:1 is recommended for water carrying pipework.

The hot water storage cylinder MUST be of the indirect type and should preferably be manufactured of copper.

Single feed, indirect cylinders are not recommended and MUST NOT be used on sealed systems.

The appliances are NOT suitable for gravity central heating, nor are they suitable for the provision of gravity domestic hot water.

The hot water cylinder and ancillary pipework, not forming part of the useful heating surface, should be lagged to prevent heat loss and any possible freezing - particularly where pipes run through roof spaces and ventilated under floor spaces.

Boilers not fitted to a sealed system must be vented.

IMPORTANT

Draining taps MUST be located in accessible positions, which permit the draining of the whole system - including the boiler and hot water storage vessel. They should be at least 1/2" BSP nominal size and be in accordance with BS. 2879.

The boiler is fitted with a special drain plug, which is provided, to drain the BOILER ONLY, in the event of the system drain plug being unable to do so. The hydraulic resistance of the boilers, at MAXIMUM OUTPUT with an 11°C (20°F) temperature differential, are shown in Table 5.

Table 5 - Water flow rate and pressure loss

Boiler Size	FF	30	40	50	60	70	80	100
Boiler Output	kW	8.8	11.7	14.6	17.6	20.5	23.4	29.3
	Btu/h x 1000	30	40	50	60	70	80	100
Water Flow Rate	l/min	11.4	15.2	19.0	22.8	26.5	30.3	38.0
	gal/h	150	200	250	300	350	400	500
Pressure Loss	mbar	22.0	20.4	31.5	41.7	54.8	77.0	106
	in wg	8.9	8.3	12.6	16.7	22.0	30.9	42.5

WATER TREATMENT

These boilers incorporate a cast iron heat exchanger. As part of the installation the central heating system should be thoroughly flushed with appropriate water treatment in order to comply with BS7593:1992.

Caradon Plumbing Ltd recommend the use of Fernox or Betz Dearborn water treatment products which must be used in accordance with the manufacturers instructions. For further information contact :-
Fernox Manufacturing. Co. Ltd, Tandem House, Marlowe Way, Croydon, Surrey CRO 4XS, tel 0870 5601 5000 or
Betz Dearborn Ltd, Widnes, Cheshire, tel. 0151 424 5351

Important: Any other treatment for this product will render the guarantee of Caradon Plumbing Ltd INVALID.

Notes.

1. *If an inhibitor is used, and in hard water areas where treatment to prevent lime deposits is necessary, it is most important that the water treatment MUST be maintained at the correct concentrations recommended by the treatment manufacturer.*
2. *Artificially softened water must not be used in the system, under any circumstances.*

THERMOSTATIC RADIATOR VALVES

Caradon Plumbing Limited recommend that heating systems utilising full thermostatic radiator valve control of temperature in individual rooms should also be fitted with a room thermostat controlling the temperature in a space served by radiators not fitted with such a valve as stated in BS. 5449.

When thermostatic radiator valves are used, the space heating temperature control over a living / dining area or hallway having a heating requirement of at least 10% of the boiler heat output should be achieved using a room thermostat, whilst other rooms are individually controlled by thermostatic radiator valves. However, if the system employs thermostatic radiator valves on all radiators, or two port valves without end switches, then a bypass must be fitted to ensure a flow of water should all valves be in the closed position.

ELECTRICAL SUPPLY

Wiring external to the appliance MUST be in accordance with the current I.E.E. (BS.7671) Wiring Regulations and any local regulations which apply.

The point of connection to the mains should be readily accessible and adjacent to the boiler, except that for bathroom installations; the point of connection to the mains MUST be situated outside of the bathroom.

Note. *Where a room sealed appliance is installed in a room containing a bath or shower then the appliance and any electrical switch or appliance control utilising mains electricity should be so situated that it cannot be touched by a person using the bath or shower. See Frame 36 for details.*

3 OPEN VENT SYSTEM REQUIREMENTS - FULLY PUMPED.

The system should be vented directly off the boiler flow pipe, as close to the boiler as possible. The cold feed entry should be inverted and MUST be positioned between the pump and the vent, and not more than 150mm (6") away from the vent connection.

There should be a minimum height - 450mm (18") - of open vent above cistern water level. If this is impossible refer below.

The vertical distance between the highest point of the system and the feed/expansion cistern water level MUST not be less than 450mm (18").

The pump MUST be fitted on the flow side of the boiler.

A suitable pump is a domestic circulator capable of providing an 11°C (20°F) temperature differential (e.g. Grundfos UPS 15/50 or equivalent). The vertical distance between the pump and feed/expansion cistern MUST comply with the pump manufacturers minimum requirements to avoid cavitation. Should these conditions not apply, either lower the pump position or raise the cistern above the minimum requirement specified by **Caradon Plumbing Limited.**

Note. *A cold water feed must be available back to the boiler, when all automatic valves are in the closed position (refer to BS. 6798) and when close coupled the feed must not be in a vertical leg.*

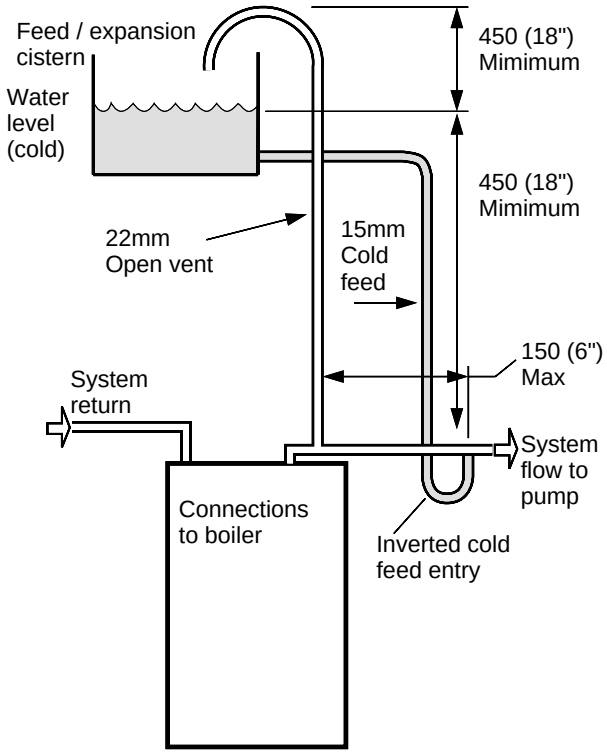

4 LOW HEAD INSTALLATIONS

The **WH FF** range of boilers can be installed in low head situations by fitting a 'surge arrester' in the expansion pipe as shown.

The following conditions MUST be observed:

1. The surge arrester must be at least 42mm in diameter x 150mm long, thus ensuring a MINIMUM air gap and a MINIMUM depth of water below the static water level (cold) of 75mm.
2. The static water level (cold) must be at least 200mm above the top of the horizontal flow pipe, fitted as shown. The vent connection MUST NOT be made immediately off the top of the boiler, as venting is made less efficient.
3. The maximum practical length of 15mm cold feed pipe should be used in order to reduce the effective volume of system water expanding into the feed/expansion cistern to a minimum.

Note. *The pump manufacturers minimum requirements must be complied with*

Minimum Requirements

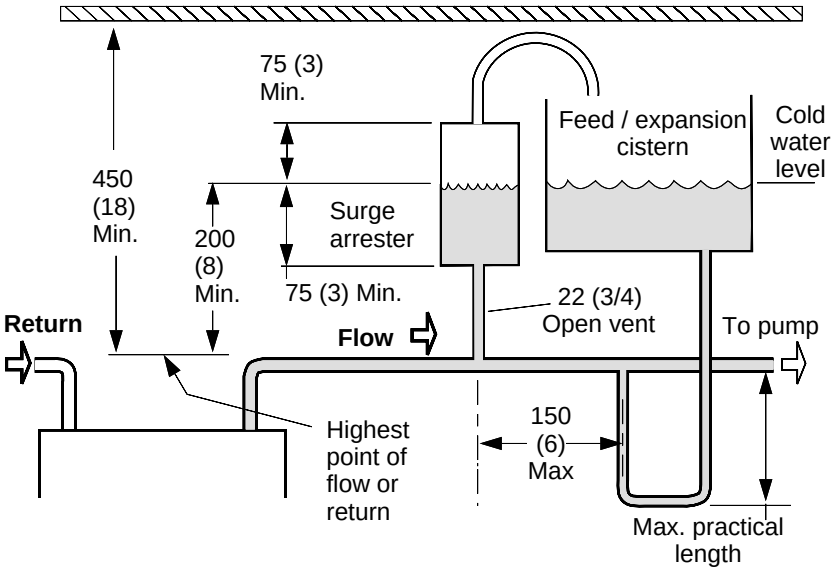

All dimensions in mm (in.). **N.B.** Imperial dimensions are approximate

5 BOILER ASSEMBLY - Exploded view

WH 30 FF shown

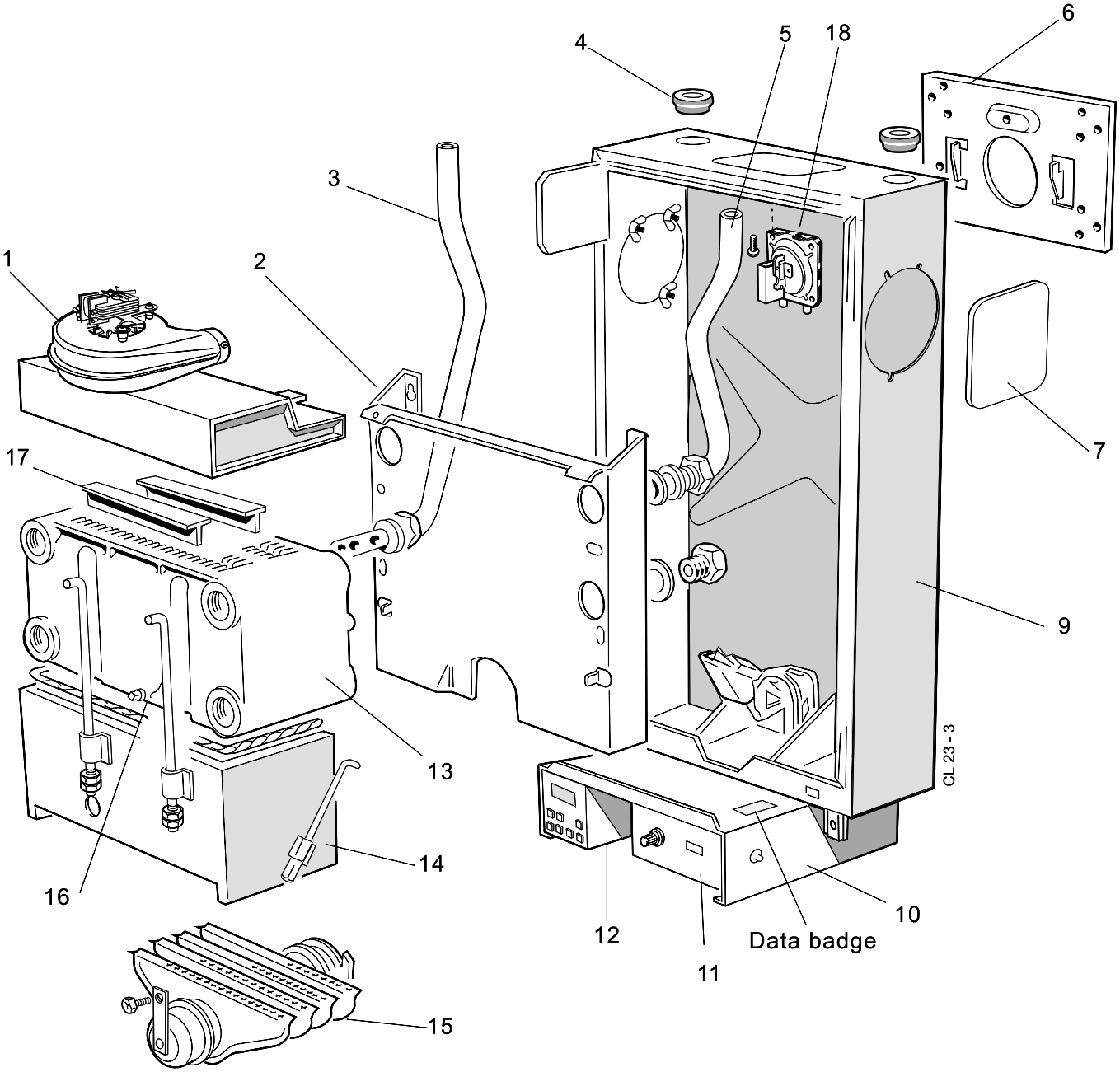

LEGEND

1. Fan /collector hood assembly.
2. Inter-panel.
3. Pumped return pipe.
4. Rubber sealing grommets.
5. Pumped flow pipe.
6. Wall mounting plate.
7. Sealing plates, 3 off
9. Back panel.
10. Controls support.
11. Control box .
12. Timer (optional)
13. Heat exchanger.
14. Combustion chamber.
15. Main burner.
16. Boiler drain point.
17. Flue baffles.
18. Pressure switch

6 UNPACKING

The boiler is supplied fully assembled in one pack, together with a standard flue assembly for lengths up to 600mm (23 1/2"), rear or side flue outlet, in **Pack B1.**

Optional extras, if ordered (Downward Piping Kit, Extension Duct Kit, Roof Flue Kit and 90° Flue Elbow Kit) are available in separate boxes.

Unpack and check the contents.

Boiler Pack Contents

- The complete boiler
- Installation & Servicing Instructions
- User's Instructions
- Hardware Pack (listed below)
- Wall mounting template
- Wall mounting plate
- Side outlet terminal mounting plate
- Flue extension tube, 1 off
- Boiler sealing plate, 1 off

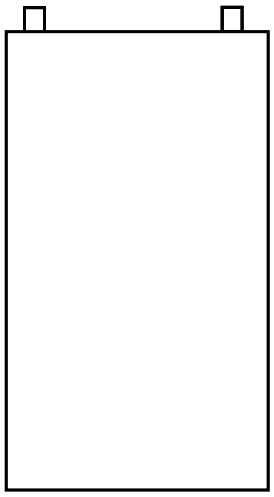

Complete boiler

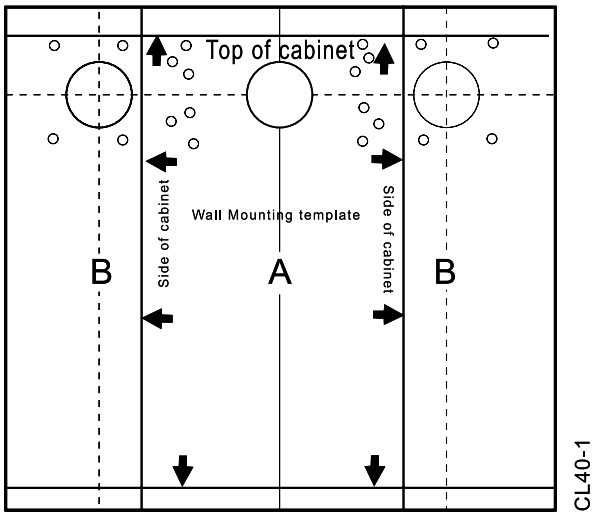

Wall mounting template

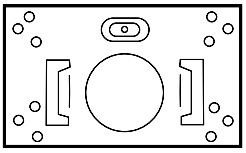

Wall mounting plate

Hardware Pack Contents

- 50mm x No. 14 wood screw, 4 off
- 50mm x No. 10 wood screw, 8 off
- Wall plug, 12 off
- Data badge indicator arrow, 1 off
- M8 washer, 1 off
- 22mm x 28mm copper reducing socket (70 FF, 80 FF & 100 FF ONLY), 2 off
- M5 wing nut, 3 off
- Sealing plate, 1 off
- M8 x 12 Hx. Hd. screw, 1 off

Pack B1 Contents

- Duct cutting support, 2 off (cardboard)
- Terminal wall plate, 1 off.
- Terminal grille assy., 1 off.
- Polyurethane foam seal 400 lg., 1 off.
- No. 8 x 8 lg. Pozi pan hd. screws, 3 off.

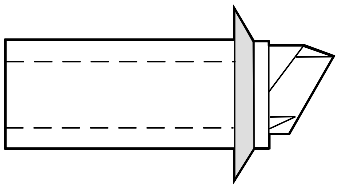

Flue terminal

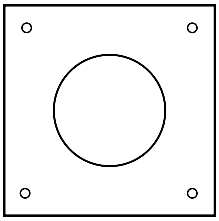

Terminal wall plate

7 PACKAGING AND CASING REMOVAL

STANDARD MODEL

1. Unpack the boiler.
2. Remove the casing as follows and place to one side to avoid damage.
   - **a.** Undo the 2 casing retaining screws (a) retaining the casing to the back panel.
   - **b.** Swing the bottom of the boiler casing up until the controls pod casing has cleared the controls then unhook the top from the back panel.
3. Remove the boiler from its packaging base. The boiler may now be stood upright on its controls support protection frame to ease handling and installation.
4. Unpack the boiler terminal box and, if applicable, the extension flue box(es).

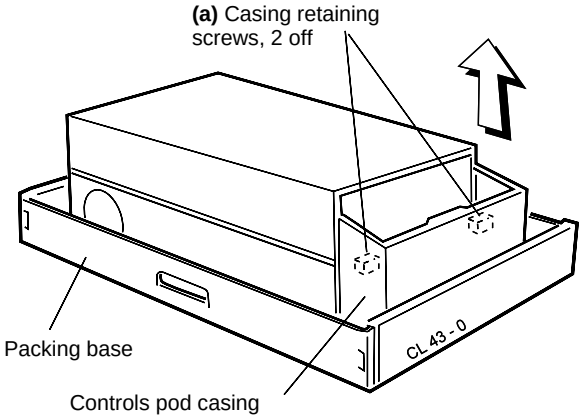

DELUXE MODEL (LX)

1. Unpack the boiler.
2. Remove the casing as follows and place to one side to avoid damage.
   - **a.** Slide the glass fascia upward (arrow b)
   - **b.** Undo the 2 casing retaining screws (c), retaining the casing to the back panel.
   - **c.** Swing the bottom of the boiler casing up until the controls pod casing has cleared the controls then unhook the top from the back panel.
3. Remove the boiler from its packaging base. The boiler may now be stood upright on its controls support protection frame to ease handling and installation.
4. Unpack the boiler terminal box and, if applicable, the extension flue box(es).

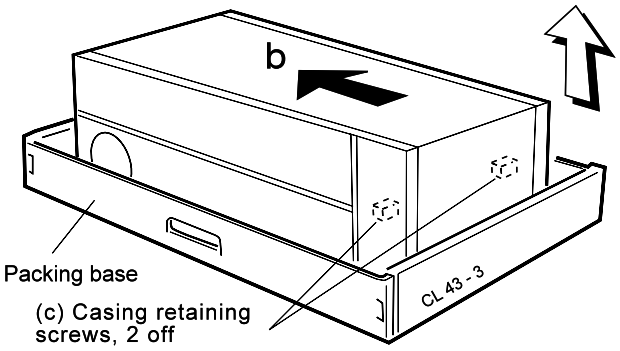

8 DETERMINING THE FLUE LENGTH

It is MOST IMPORTANT that the boiler is installed in a vertical position.

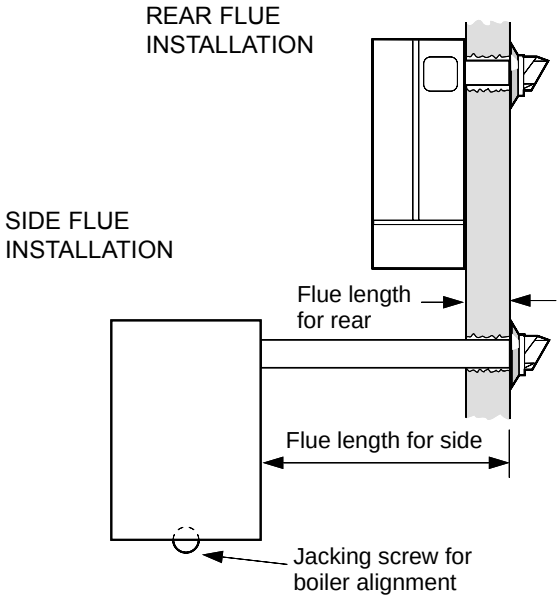

FLUE KITS

Pack B1: supplied as standard.

Extn Duct Kit* : optional extension kit for side flue or rear flue outlet. Refer to 'Flue Extension Ducts'

1. A maximum of 2 extension ducts (plus the standard flue duct) may be used together.
2. Flue extensions of greater than 1m (39") should be supported with the bracket provided. If the stand-off brackets have been used it is necessary, in order to keep the flue aligned, to use the spacer bracket with the support bracket.

Flue length mm	Accessories	Product No.
Up to 600	B1 Pack, 1 off	153930
600 to 1550*	B1 Pack 1 off + Extn Duct, 1 off	153930+153931
1550 to 2500*	B1 Pack 1 off + Extn Duct, 2 off	153930+ 153931, 2 off
2500 to 3000*	B1 Pack 1 off + Extn Duct, 3 off	153930+ 153931, 3 off

* Not for 100 FF model

9 FLUE ASSEMBLY - Exploded View

1. An optional flue duct extension kit is required for wall thicknesses greater than 600mm (23 1/2") Refer to Frame 8.
2. When cutting the ducts, always use the cardboard support rings provided.

IMPORTANT.
100 FF models only
The flue extension tube includes an air deflector ring.

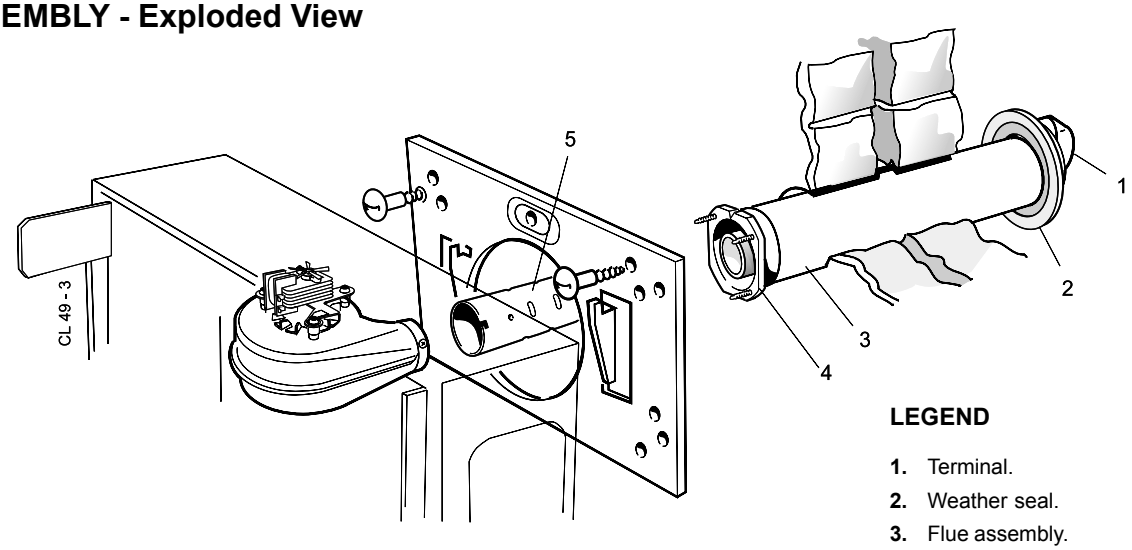

LEGEND

1. Terminal.
2. Weather seal.
3. Flue assembly.
4. Boiler sealing ring
5. Flue extension tube.

10 WALL MOUNTING TEMPLATE

Note. *The template shows the positions for the fixing holes and the flue hole centres for standard installation. Care must be taken to ensure the correct holes are drilled.*

1. Separate the templates.
2. Tape the templates into the selected position.
3. Ensure squareness by hanging a plumb line as shown.
4. Mark onto the wall (if required) the following:
   - **a.** The wall mounting plate screw positions (choose one from each group). **Note.** *Mark the centre of the flue hole as well as the circumference.*
   - **b.** The position of the flue duct hole.
   - **c.** Downward pipe routing bracket screw positions.
5. Remove the templates from the wall.

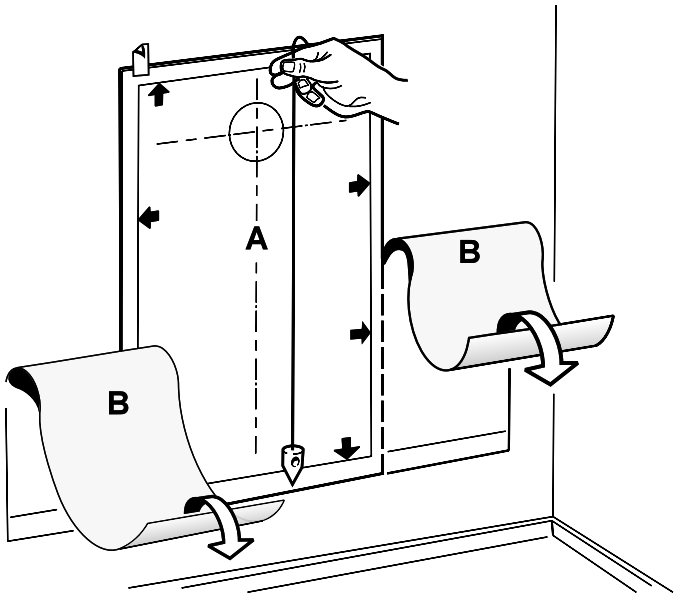

11 PREPARING THE WALL

IMPORTANT. Ensure that, during the cutting operation, masonry falling outside of the building does not cause damage or personal injury.

1. Cut the flue hole, preferably with a 125mm (5") core boring tool, ensuring that the hole is square to the wall. If the hole has been quite accurately cut with a drill then making good the wall faces is not essential as seals are provided at both ends of the flue. However, both wall faces immediately around the cut hole should be flat; make good if necessary. For less accurate holes make good to approximately 125mm (5") diameter at the 2 wall faces.
2. Drill 4 holes for the wall mounting plate with an 8mm (5/16") masonry drill. If the stand-off brackets are used ensure the correct holes are chosen.
3. Insert the plastic plugs provided.

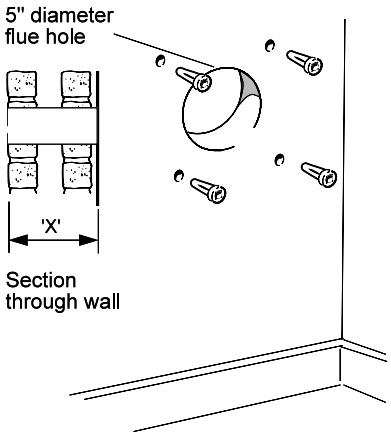

Note. *Check all of the hole positions BEFORE drilling*

Note. *If the terminal is to be sited within 25-40mm of a corner or vertical pipe (refer to Table 3) then the hole MUST be accurately cut and the rubber weather seal trimmed around the groove provided.*
The terminal wall plate need not be fitted.

REAR FLUE OUTLET

12 CUTTING THE FLUE - wall thicknesses of 114 to 600mm

Note. *If the stand-off brackets are used it is essential that 30mm is added to the measured wall thickness when marking the flue (to allow for the thickness of the brackets).*

1. Measure and note the wall thickness X.
2. Mark the wall thickness onto the flue.
3. To ensure the tube is cut square, mark the flue all the way round.
4. Cut to length X, using the cardboard ring for support.
5. Remove cardboard ring and remove any burrs.

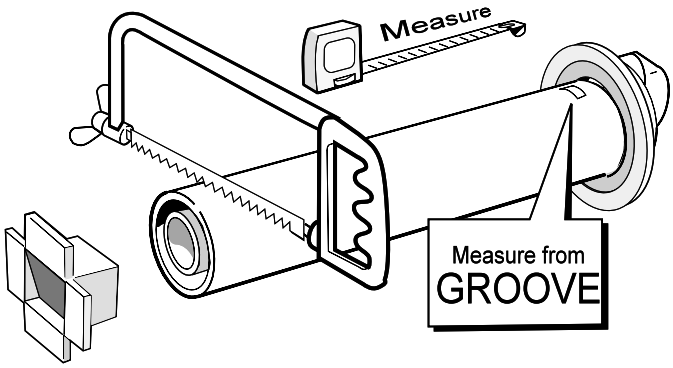

13 FITTING THE BOILER SEALING RING TO THE FLUE

1. Fit the boiler sealing ring inside the outer flue duct. Ensure the boiler sealing ring is fully engaged.

   Ensure the notch aligns with the groove on the outer flue duct. This ensures correct alignment of the flue terminal.

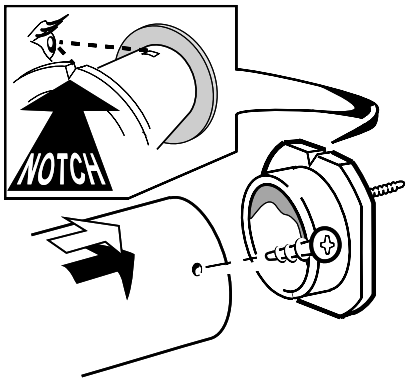

2. Drill 3 holes 3.2mm (1/8") dia. through the outer flue duct and boiler sealing ring. **Do NOT drill the inner flue duct.**
3. Insert the self-tapping screws, provided, in order to fix the boiler sealing ring in position.
4. Stick the self-adhesive foam strip, provided in the hardware pack, onto the flue immediately behind the boiler sealing ring.

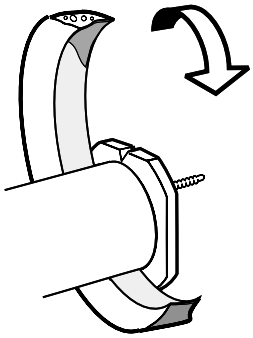

14 FITTING THE FLUE ASSEMBLY

1. Insert the flue extension tube into the flue assembly.
2. Insert the flue assembly through the hole far enough to allow the rubber seal to unfold completely and form an adequate seal on the outside wall.
3. Ensure the notch is at the top. This will aid the location of the studs into the boiler back panel.

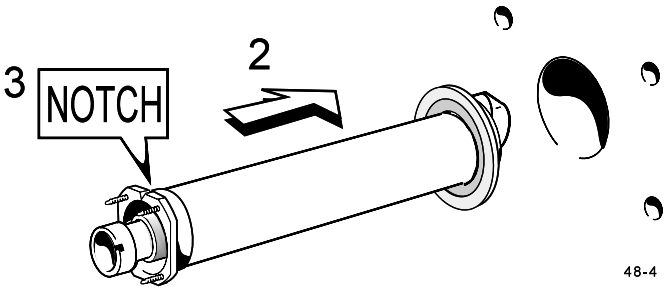

15 WALL MOUNTING PLATE

1. Fix the mounting plate to the wall with the No.14 x 50mm wood screws.
2. If downward routing of pipes is required then the downward routing pipe brackets and M8 spacer (supplied in the Downward Piping Kit) should be fitted to the wall mounting plate now.
3. Fit the bottom 2 screws to secure the bracket(s) to the wall, through the wall mounting plate.
4. Check with a spirit level that the plate is vertical.

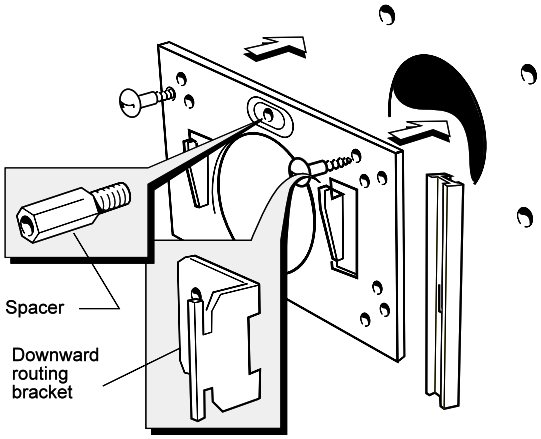

16 MOUNTING THE BOILER

Note. *Have ready to hand the M8 screw, washer and rectangular plate supplied in the hardware pack. For downward routing of pipes the M5 spacer supplied in the Downward Piping Kit, should now be fitted to the back of the boiler.*

1. Lift the boiler onto the wall mounting plate hooks as shown.

   Do not use the burner / controls for lifting

2. Fit the M8 screw, washer and rectangular plate to retain the boiler.

Note.

Before fully tightening the M8 screw, check the boiler alignment, using a spirit level, and adjust as necessary with the jacking screw.

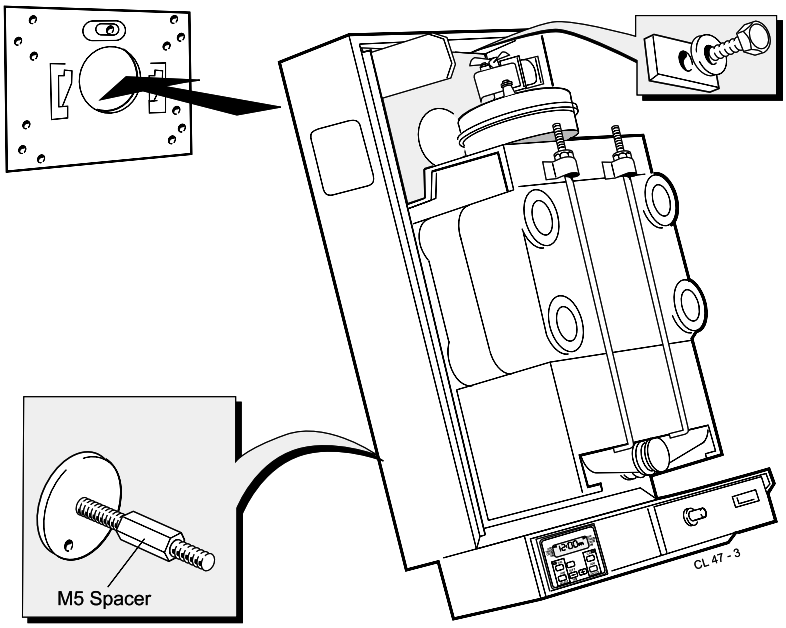

17 CONNECTING THE FLUE TO THE BOILER

1. Pull the flue through the wall mounting plate and locate the 3 studs in the holes in the back panel.
2. Secure the flue to the boiler using the three M5 wing nuts provided.
3. Pull the flue extension tube and engage onto the fan. Locate and secure with the M4 screw attached to the fan.

Note.

The sealing ring studs will locate in the back panel one way only. This will ensure that the terminal grille is correctly aligned.

IMPORTANT. 100 FF models only
The flue extension tube includes an air deflector ring.

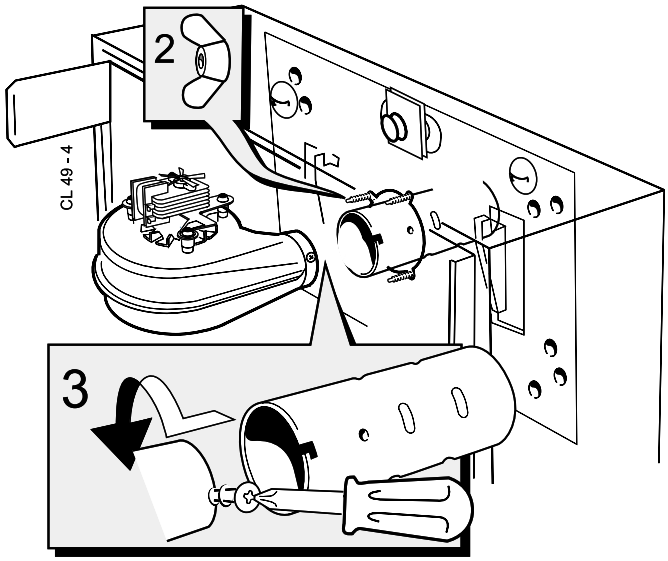

18 TERMINAL WALL PLATE

This plate allows neat concealment and full compression of the rubber seal. Its use is not essential if the flue hole and flue ducts have been accurately cut and the outside wall face is flat.

1. Position the terminal wall plate over the terminal.
2. Mark and drill 4 fixing holes with an 7mm (9/32") masonry drill.
3. Insert the 4 plastic plugs provided.
4. Secure the plate with 4 of the No.10 x 2" screws provided.

Note. *If the terminal is less than 2m (6' 6") above ground level, an approved terminal guard should be fitted. Refer to the Contents List on Page 4.*

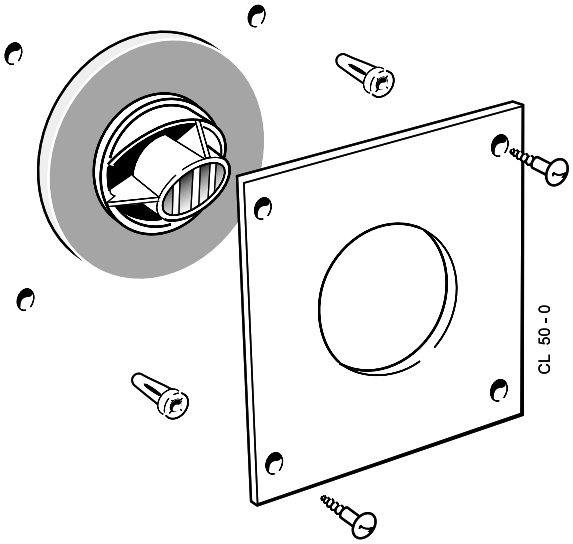

REAR FLUE OUTLET

19 FLUE ASSEMBLY - Exploded view

For wall thickness 114mm to 600mm

1. An optional flue duct extension kit is required for lengths (distance from the outside wall to the relevant side of the boiler casing) greater than 600mm (23 1/2") Refer to Frame 8.
2. When cutting the ducts always use the cardboard support provided.

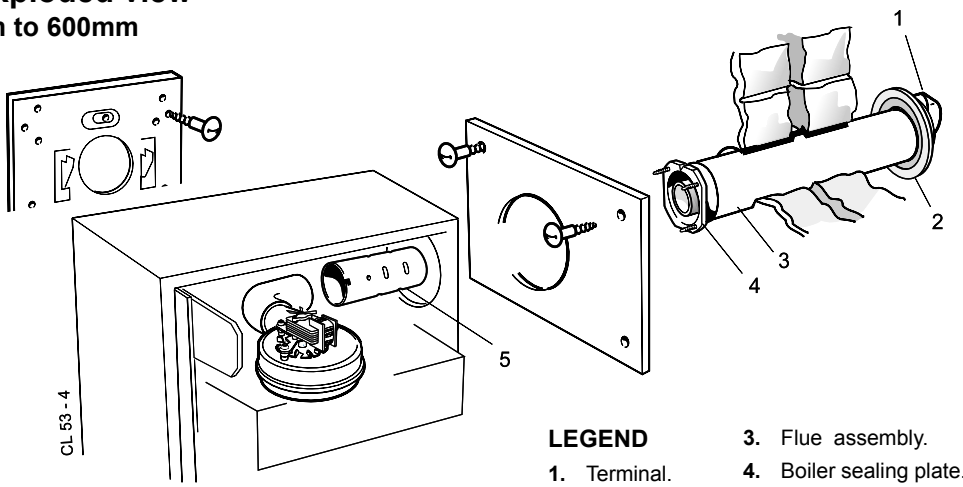

LEGEND

1. Terminal.
2. Weather seal.
3. Flue assembly.
4. Boiler sealing plate.
5. Flue extension tube.

IMPORTANT.
100 FF models only. The flue extension tube includes an air deflector ring.

20 WALL MOUNTING TEMPLATE

Note. *The template shows the positions for the fixing holes and the flue hole centres for standard installation.*
If the flow and return pipes are to be routed down behind the boiler the downward routing pipe brackets, supplied in the Downward Piping Kit, must be used. These brackets are secured to the wall mounting plate and it is essential to use only those holes as shown on the wall mounting template.
Care MUST be taken to ensure the correct holes are drilled.

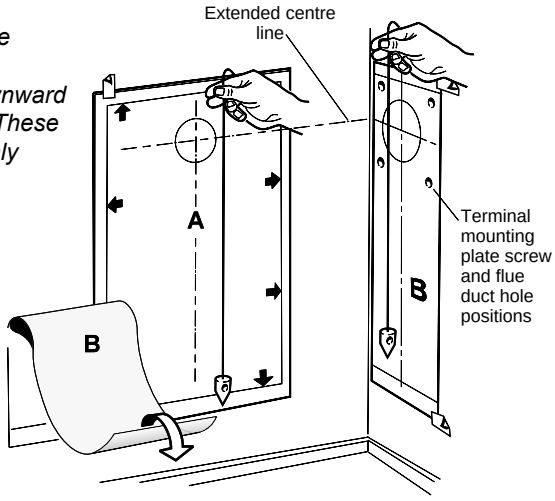

1. Separate the templates.
2. Tape both templates into the selected position locating template B through an extended centre line as shown.
3. Ensure squareness by hanging a plumb line as shown.
4. Mark onto the wall (if required) the following:
   - **a.** The 4 wall mounting plate screw positions (choose one from each group). If the downward routing pipe brackets are used ensure the correct holes are chosen.
   - **b.** The 4 screw positions for the side outlet plate.
   - **c.** The position of the flue duct hole (ensure that the correct centre is marked depending on whether the downward routing pipe brackets are used or not).

   Note. *Mark the centre of the hole as well as the circumference.*
   - **d.** The side of the casing nearest the flue outlet.
5. Remove both templates from the wall.

21 PREPARING THE WALL

IMPORTANT. Ensure that, during the cutting operation, masonry falling outside of the building does not cause damage or personal injury.

1. Cut the flue hole, preferably with a 125mm (5") core boring tool, ensuring that the hole is square to the wall. If the hole has been accurately cut with a drill then making good the wall faces is not essential as seals are provided at both ends of the flue. However, both wall faces immediately around the cut hole should be flat; make good if necessary. For less accurate holes make good to approximately 125mm (5") diameter at the 2 wall faces.
2. Drill 4 holes with an 8mm (5/16") masonry drill and insert the plastic plugs provided, for the wall mounting plate.
3. Drill 4 holes with a 7mm (9/32") masonry drill and insert the plastic plugs provided, for the side mounting plate.

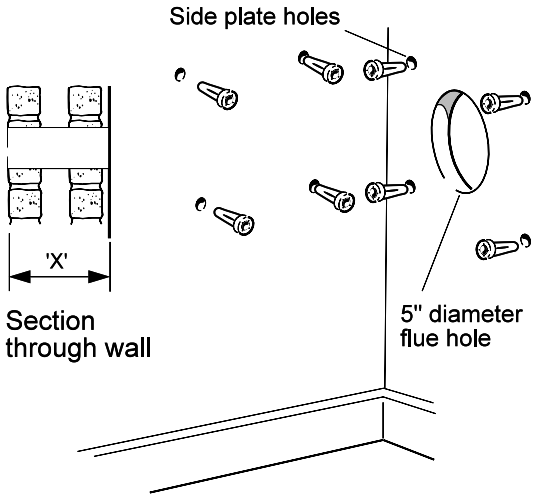

Note. *If the terminal is to be sited within 25-40mm of a corner or vertical pipe (refer to Table 3) then the hole MUST be accurately cut and the rubber weather seal trimmed around the groove provided. The terminal wall plate need not be fitted.*

22 CUTTING THE FLUE
For flue lengths 114 to 600mm ONLY

1. Measure the flue length required (i.e. the distance from the side of the boiler to the outside face of the wall). Refer to Frame 9.
2. Mark the flue length required onto the flue, measuring from the groove near the terminal.
3. To ensure the tube is cut square, mark the flue all the way round.
4. Insert the cardboard duct ring for support and cut to length.
5. Remove cardboard duct ring and remove any burrs.

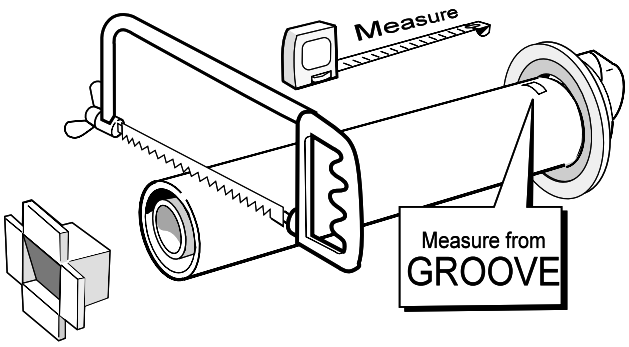

For flue lengths greater than 600mm, refer to Frames 32 & 33 - Flue extension ducts.

23 FITTING THE FOAM SEAL

1. To determine the position for the foam seal measure the wall thickness and mark it onto the flue, measuring from the groove near the terminal.
2. Wrap the self-adhesive foam strip round the flue, ensuring that the foam is on the terminal side of the line. This seals the gap between the flue and the wall.

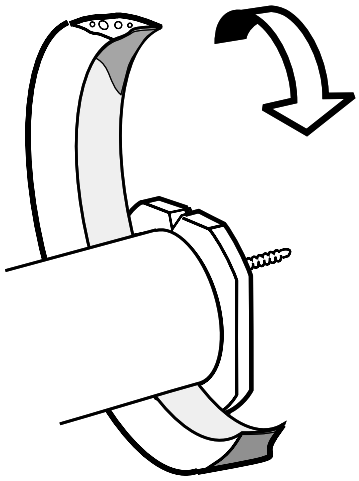

24 FITTING BOILER SEALING RING TO THE FLUE

1. Fit the boiler sealing ring inside the outer flue duct. Ensure the boiler sealing ring is fully engaged. Ensure the notch aligns with the groove on the outer flue duct. This ensures correct alignment of the flue terminal.
2. Drill 3 holes 3.2mm (1/8") dia. through the outer flue duct and boiler sealing ring. *Do not drill the inner flue duct*.
3. Insert the self tapping screws, provided, in order to fix the boiler sealing ring in position.

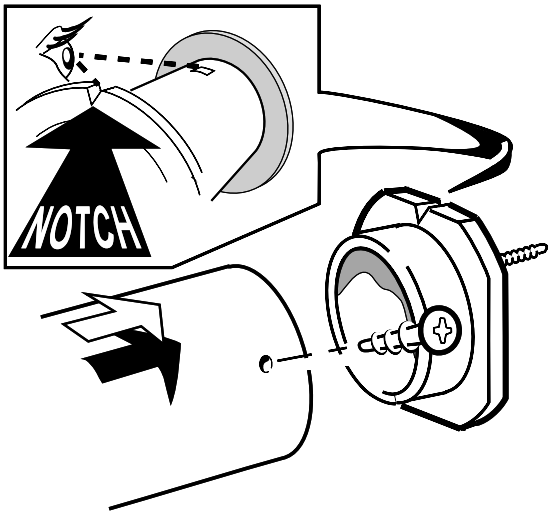

25 FITTING THE FLUE ASSEMBLY

1. Insert the flue assembly through the hole far enough to allow the rubber seal to unfold completely and form an adequate seal on the outside wall. This will also ensure the correct alignment of the flue terminal.
2. Ensure the notch is at the top. This will aid the location of the studs into the boiler back panel.

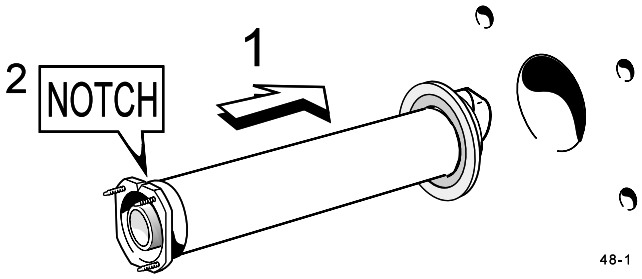

Flue assembly

SIDE FLUE OUTLET

26 FITTING THE SIDE OUTLET PLATES

Note. *If the boiler is fitted closer than 25mm to the side wall the side outlet plate must be fitted now.*

1. Split the side outlet plate into 2 down the split line.
2. Fit the 2 halves of the side outlet plate to the wall, ensuring they are behind the boiler sealing ring.

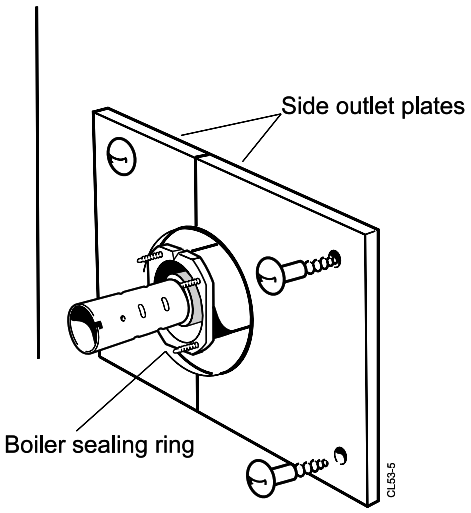

27 WALL MOUNTING PLATE

1. Fix the mounting plate to the wall with the No.14 x 50mm wood screws.
2. If downward routing of pipes is required then the downward routing pipe brackets and M8 spacer (supplied in the Downward Piping Kit) should be fitted to the wall mounting plate now.
3. Fit the bottom 2 screws to secure the bracket(s) to the wall, through the wall mounting plate.
4. Check with a spirit level that the plate is vertical.

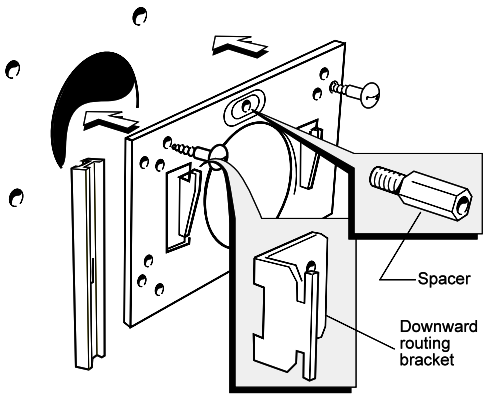

28 MOUNTING THE BOILER

Notes 1. *Have ready to hand the M8 screw, washer and rectangular plate supplied in the hardware pack.*
2. *For downward routing of pipes the M5 spacer (supplied in the Downward Piping Kit) should now be fitted to the back of the boiler.*

1. The boiler is supplied for rear outlet installation. Remove the blanking plate from the direction required and use this to blank off the rear outlet.
2. Lift the boiler onto the wall mounting plate hooks as shown.

   Do not use the burner/ controls for lifting.

3. Fit the M8 screw, washer and rectangular plate to retain the boiler.

Note. *Before fully tightening the M8 screw check the boiler alignment, using a spirit level, and adjust as necessary with the jacking screw.*

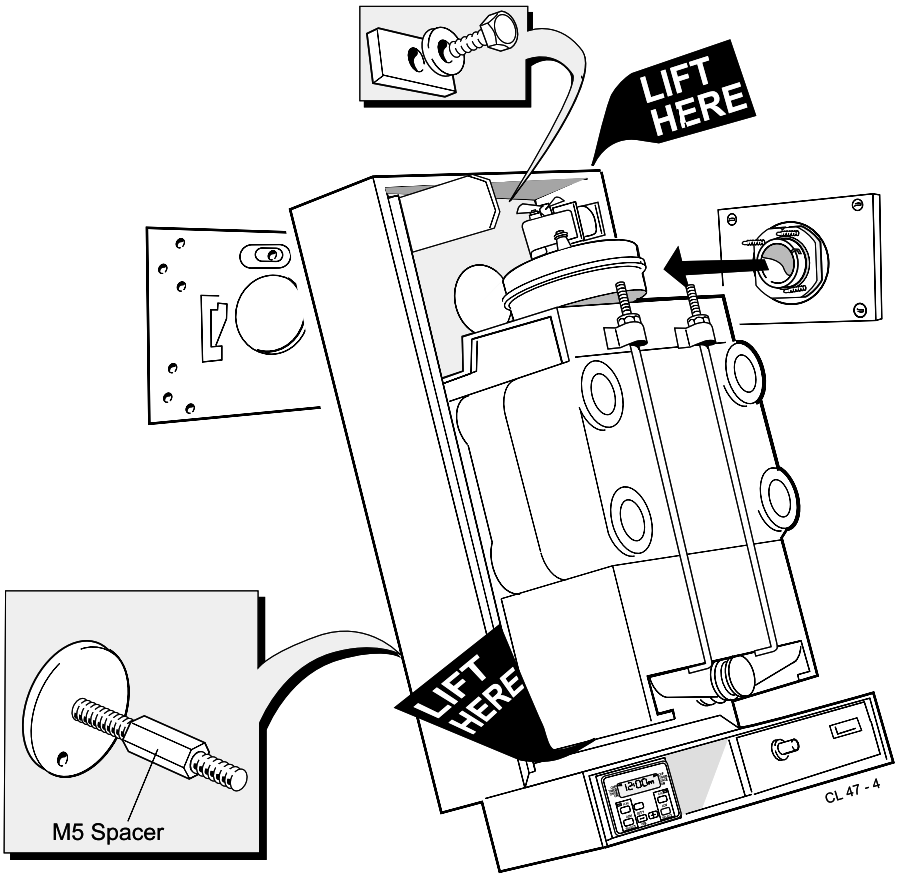

29 CONNECTING THE FLUE TO THE BOILER

1. Pull the flue through the side outlet plate and locate the 3 studs in the hole in the side of the boiler.
2. Secure the flue to the boiler using the three M5 nuts provided.
3. Insert the flue extension tube into the flue.
4. Fit the 90° flue elbow, supplied with the boiler, onto the fan in the direction required, after first removing the underside screw, which is not required. Secure in position with the screw attached to the fan.
5. Pull the flue extension tube and engage onto the fan elbow and secure with the screw attached to the elbow.

Note. *The sealing ring studs will locate in the back panel one way only. This will ensure that the terminal grille is correctly aligned.*

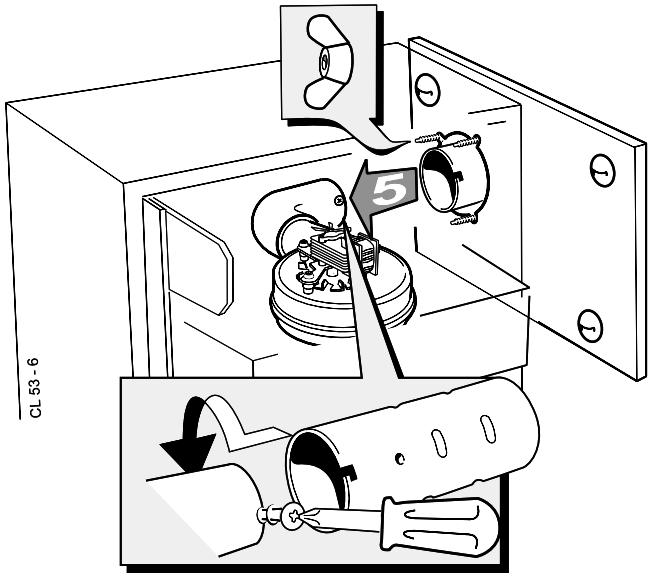

30 TERMINAL WALL PLATE

This plate allows neat concealment and full compression of the rubber seal. Its use is not essential if the flue hole and flue ducts have been accurately cut and the outside wall face is flat.

1. Position the terminal wall plate over the terminal.
2. Drill 4 fixing holes with a 7mm (9/32") masonry drill.
3. Insert the 4 plastic plugs provided.
4. Secure the plate with 4 of the No.10 x 2" screws provided.

Note. *If the terminal is less than 2m (6' 6") above ground level, an approved terminal guard should be fitted. Refer to the contents list on Page 4.*

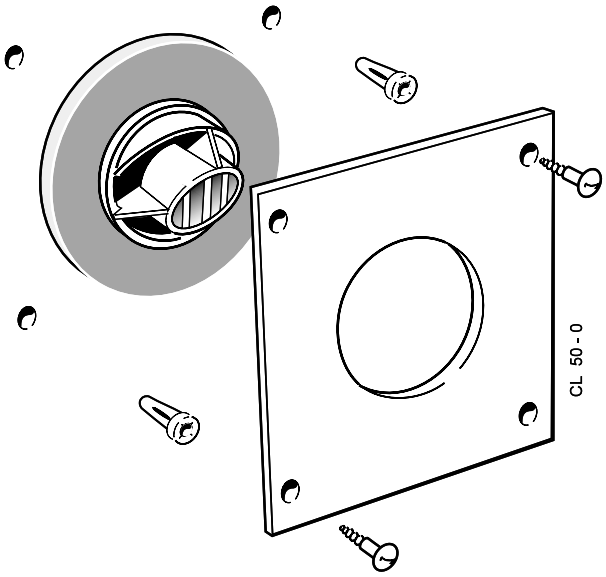

31 FLUE EXTENSION DUCTS - For flue lengths greater than 600mm (Not for 100 FF model)

Flue extension duct kit contents.

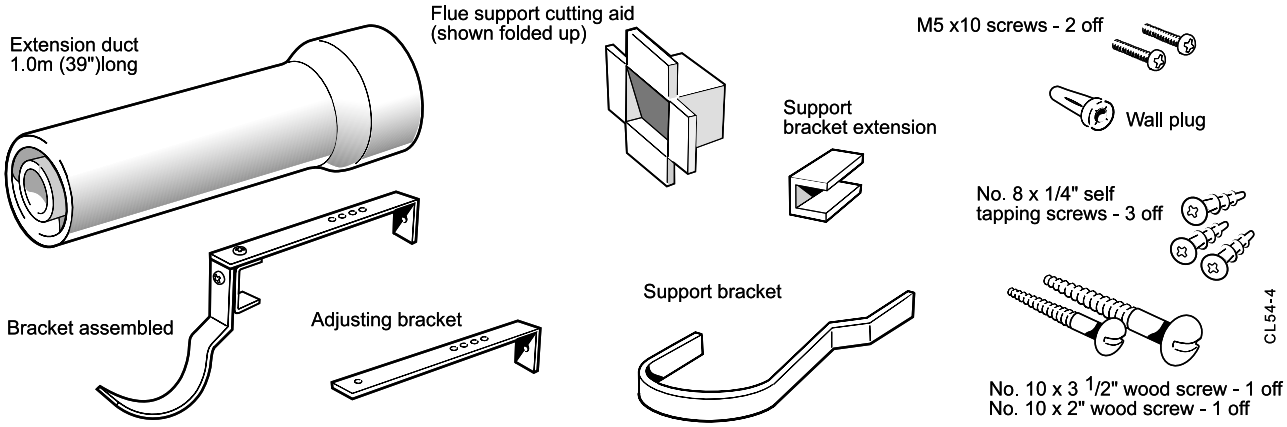

32 FLUE EXTENSION DUCTS - continued

General arrangement

Note. *Side flue shown.*

1. A *maximum* of 2 extension ducts (plus the standard flue duct) may be used together.
2. Flue extensions of greater length than 1m (39") should be supported with the bracket provided. If the stand-off brackets have been used it is necessary, in order to keep the flue aligned, to use the spacer bracket with the support bracket.

Flue length	Accessories	Product No.
Up to 600	B1 Pack, 1 off	see Frame 8
600 to 1550*	B1 Pack 1 off + Extn Duct, 1 off	see Frame 8
1550 to 2500*	B1 Pack 1 off + Extn Duct, 2 off	see Frame 8
2500 to 3000*	B1 Pack 1 off + Extn Duct, 3 off	see Frame 8

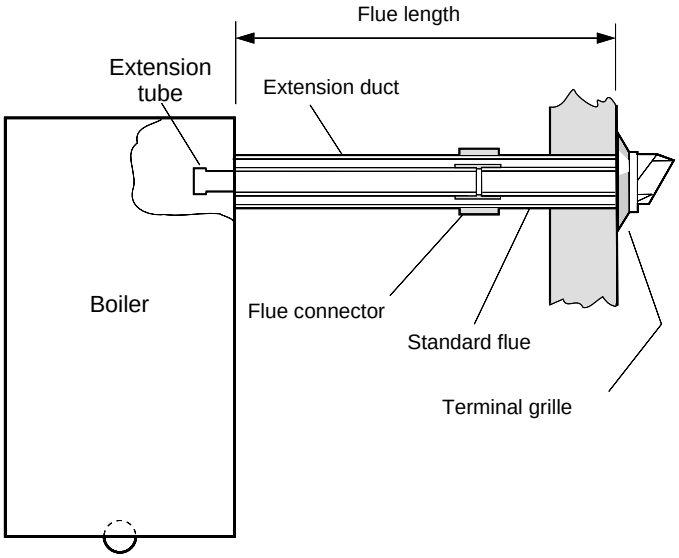

* Not for 100 FF model

33 FITTING THE KIT

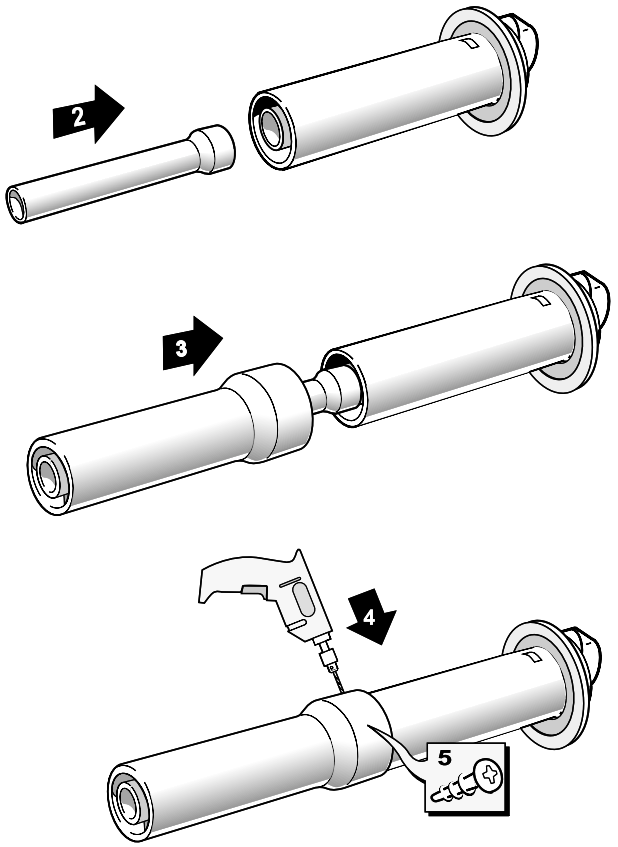

REP932 - 2

1. Remove the cardboard support aid from the flue and place safely to one side.
2. Fit the inner flue extension duct onto the inner flue duct.
3. Fit the outer flue extension duct onto the outer air duct.
4. Drill 3 - 3.2mm (1/8") dia. holes through the outer air duct. ***Do not drill the inner flue duct.***
5. Insert the self tapping screws provided to fix the air duct in position.
6. Repeat steps 1-5 if a second flue extension is required.

34 GAS CONNECTION

Refer to 'Gas Supply ', page 7.
Refer to Frame 2 for gas inlet service dimensions.

A **minimum** pressure of 20 mbar MUST be available at the boiler inlet with the boiler operating. The main gas cock is on the left hand side of the gas control valve, as shown. To facilitate connection the gas cock may be removed from the gas control valve.

35 WATER CONNECTIONS

1. Remove the plastic plugs from the flow and return pipes.
2. Make all water connections and check for water soundness.

36 ELECTRICAL CONNECTIONS

WARNING. The appliance must be efficiently earthed.

A mains supply of 230 V ~ 50 Hz is required.

All external controls and wiring must be suitable for mains voltage. Wiring should be in 3-core PVC insulated & sheathed cable, not less than 0.75mm² (24 x 0.2mm) to BS. 6500 Table 16 Wiring Regulations and local regulations.

Connection must be made in a way that allows complete isolation of the electrical supply - such as a double pole switch, having a 3mm (1/8") contact separation in both poles, serving only the boiler and system controls. The means of isolation must be accessible to the user after installation.

LEGEND			
b blue	**br** brown	**w** white	**v** violet
bk black	**r** red	**gy** grey	**pk** pink
	y yellow	**or** orange	**g/y** green/yellow

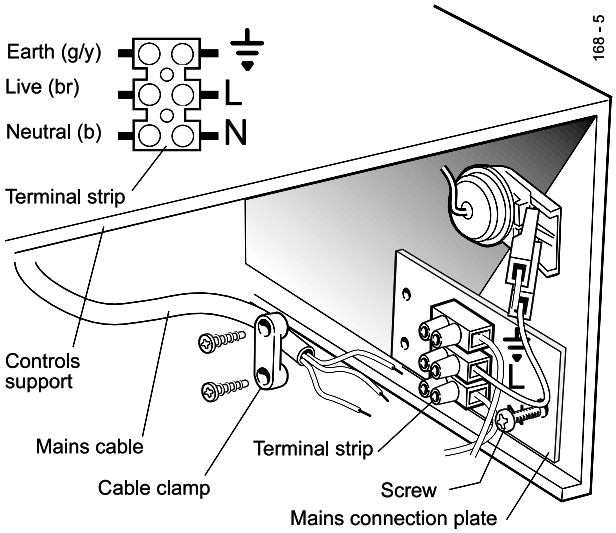

Flow wiring diagram

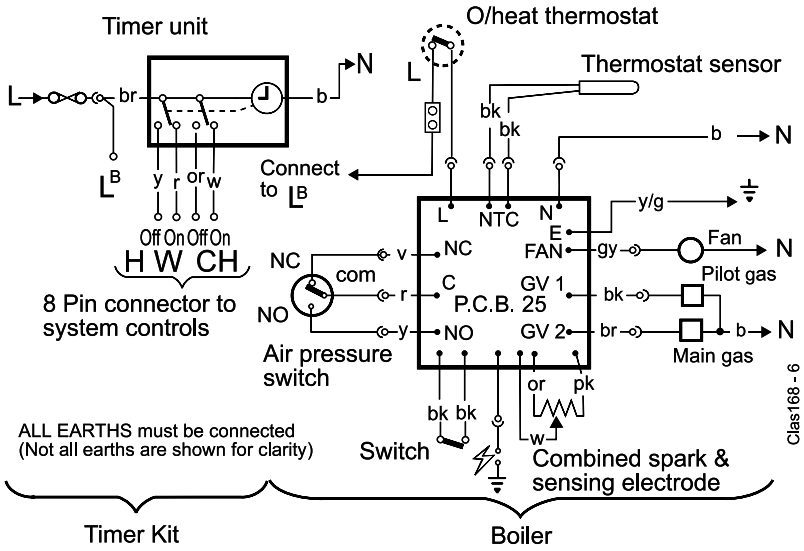

Note. *If a timer kit is to be fitted refer to the instructions provided with the kit and Frame 37.*

1. Remove the control box securing screw (M4 pozi). Pull the box forward to disengage. Refer to Frame 56.
2. Route the mains cable through the grommet in the plate of the control box.
3. Remove the screw and release the mains connection plate. Unscrew the cable clamp screws and remove the clamp.
4. Connect the mains cable wires to the terminal strip.
5. Assemble in reverse order.
6. Replace the control box and fasten to the controls support.

37 EXTERNAL CONTROLS

The wiring diagrams illustrated in Frames 39-41 cover the systems most likely to be fitted to this appliance.

For wiring external controls to the WH FF boiler, reference should be made to the system wiring diagrams supplied by the relevant manufacturer, in conjunction with the wiring diagrams shown in Frames 39-41.

Difficulty in wiring should not arise, providing the following directions are observed:

1. Controls that switch the system on or off, e.g. a time switch, must be wired, in series, in the live mains lead to the boiler.
2. Controls that override an on/off control, e.g. frost thermostat, must be wired into the mains lead, in parallel, with the control(s) to be overridden. Refer to Frame 41.
3. If a proprietary system is used, follow the instructions supplied by the manufacturer.
4. System designs featuring controls or wiring arrangements which allow the boiler to fire when there is no pump circulation taking place should not be fitted.

Advice on required modifications to the wiring may be obtained from the component manufacturers.

Notes.

1. *Connection between a frost thermostat and the time control should be made without disturbing other wiring.*
2. *A frost thermostat should be sited in a cool place in the house, but where it can sense heat from the system.*

38 PICTORIAL WIRING

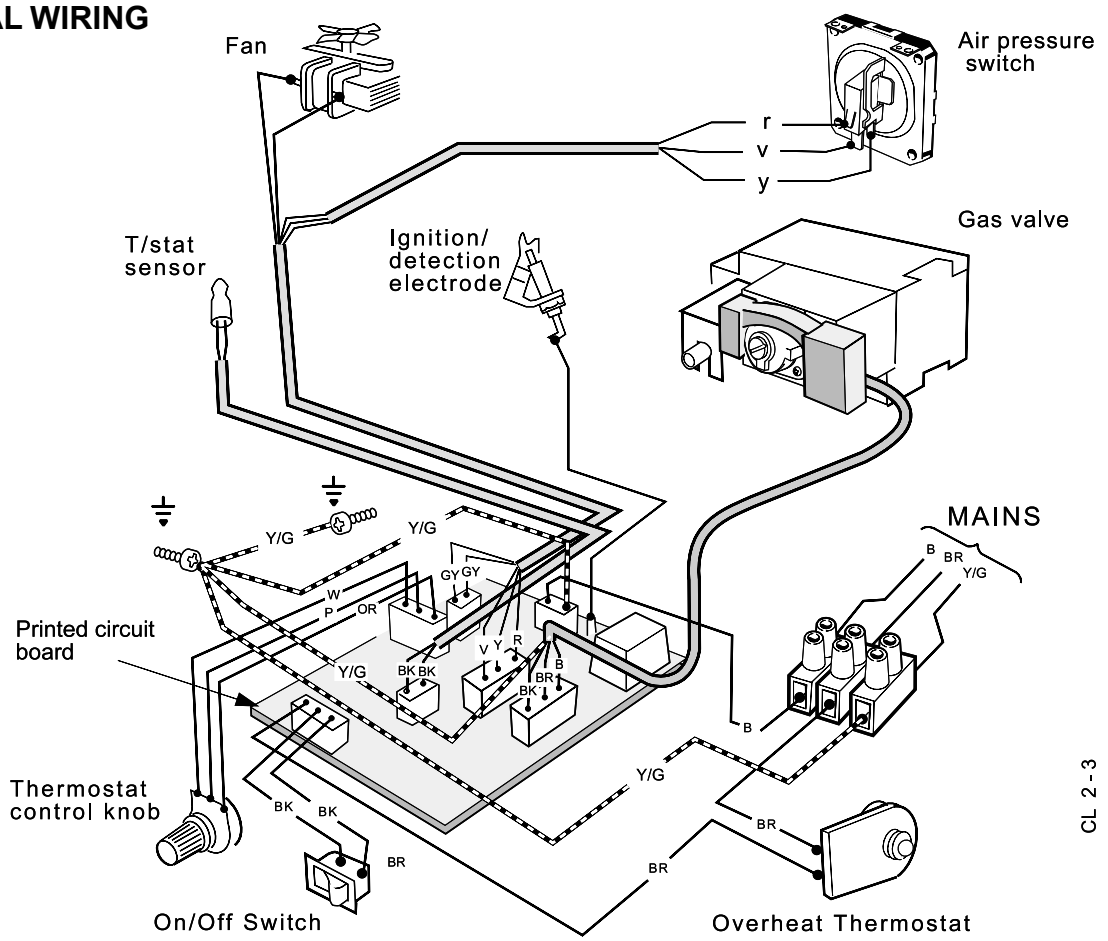

LEGEND

b	blue
bk	black
br	brown
r	red
y	yellow
w	white
or	orange
v	violet
p	pink
gy	grey
y/g	yellow/green

39 MID POSITION VALVE

Pumped only

Notes.

1. *Some earth wires are omitted for clarity. Ensure proper earth continuity when wiring.*
2. *Numbering of terminals on thermostats is specific to the manufacturer.*
3. *This is a fully controlled system - set the boiler thermostat to maximum.*
4. *Switchmaster 'Midi' is similar in operation but the wiring differs slightly - see the manufacturer's literature.*

	Room Thermostat Terminals			Mid Position valve details	Cylinder Thermostat Terminals		
	1	3	2	HONEYWELL Y PLAN V4073H 1039	1	2	c
TLX 2259 or2284	3	1	4	PEGLER 'Unishare' DT 1701 etc.	1	2	3
	1	2	4	LANDIS & GYR 'LGM' SK3 - LT2701	2	3	1
	1	3	-	A. C. L. 679. H. 340.30.UO	1 bk	2 y	3 r
RTE RTM/RTC	1 3	2 1	4 N	DRAYTON Flowshare 2	2	3	1
	1	3	4	SOPAC Centra Share ZV20 - EB MID	1	2	c
	2	1	4	DANFOSS DMV - 3M	n. c.	n. o.	com.
				SWITCHMASTER			

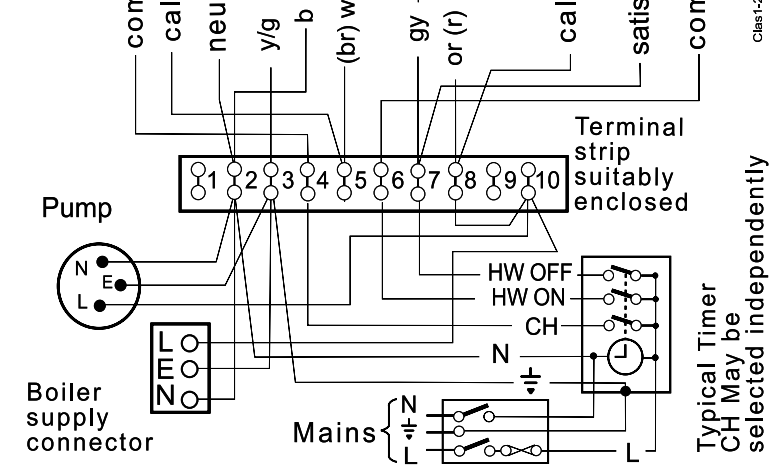

LEGEND

b	blue	**w**	white
bk	black	**y/g**	yellow/green
br	brown	**or**	orange
r	red	**gy**	grey

40 TWO SPRING CLOSED VALVE

Notes.

1. *Some earth wires are omitted for clarity. Ensure proper earth continuity when wiring.*
2. *Numbering of terminals on thermostats is specific to the manufacturer.*
3. *This is a fully controlled system - set the boiler thermostat to maximum.*
4. *Switchmaster valve has grey and orange auxiliary switch leads but the grey wire must be connected to the live supply.*

Pumped only

	Room Thermostat Terminals			Spring - shut valve details	Aux ★ switch wires		Cylinder Thermostat Terminals	
TLX 2259 or2284	1	3	2	HONEYWELL S PLAN V4043H 1056	gy	or	1	c
	3	1	4	PEGLER system 4 SZ 1301 or 1326	gy	or	1	3
	1	2	4	LANDIS & GYR SK2 - LL4453 etc.	gy	or	2	1
	1	3	-	A. C. L. 679. H. 308	gy	or	1 bk	3 r
RTE RTM/RTC	1 3	2 1	4 N	DRAYTON ZV22 or ZV28	gy	or	2	1
	1	3	4	SOPAC ZV20 - 2 EB etc.	gy	bk	1	c
	2	1	4	DANFOSS DMV - 2	gy	or	n. c.	com.
	1	3	-	SWITCHMASTER Auto Zone VM4	see note 4		2	1

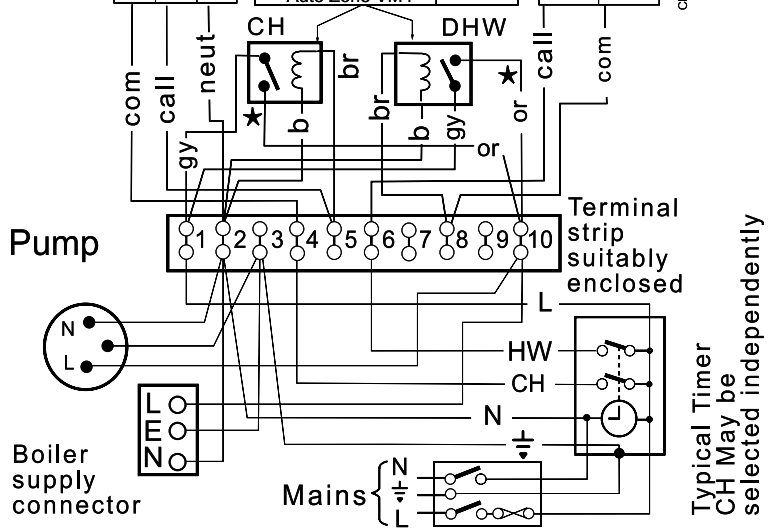

LEGEND

b	blue	**w**	white
bk	black	**gy**	grey
br	brown	**y/g**	yellow/green
r	red	**or**	orange
y	yellow	**v**	violet
		pk	pink

41 FROST PROTECTION

A

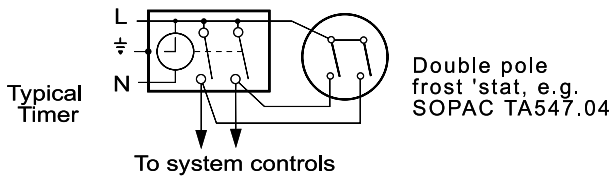

B

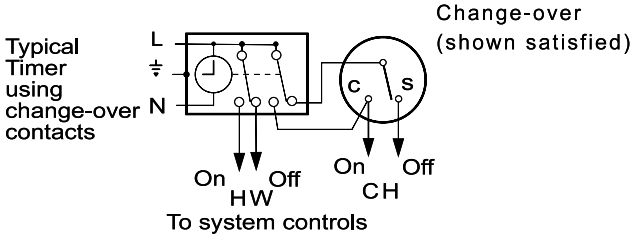

Central heating systems fitted wholly inside the house do not normally require frost protection as the house acts as a 'storage heater' and can normally be left at least 24 hrs. without frost damage. However, if parts of the pipework run outside the house or if the boiler will be left off for more than a day or so, then a frost thermostat should be wired into the system.

This is usually done at the timer, in which case the programme selector switches are set to OFF and all other controls MUST be left in the running position.

The frost thermostat should be sited in a cold place but where it can sense heat from the system.

Wiring should be as shown, with minimal disturbance to other wiring of the timer.

Designation of the terminals will vary but the timer and thermostat manufacturer's leaflets will give full details.

If a boiler is installed in a garage it may be necessary to fit a pipe thermostat.

Diagram A shows a double pole frost thermostat, which should suffice for all systems which do not use the OFF terminals of the timer.

Diagram B shows a 'change-over' frost 'stat, which will cover most systems which do use CH OFF. If, however, on such a system the HW pipework is in an isolated part of the house, a second frost 'stat may be used to protect it. If in doubt, ask your installer for advice.

42 COMMISSIONING AND TESTING

(a) Electrical Installation

1. Checks to ensure electrical safety should be carried out by a competent person.
2. ALWAYS carry out preliminary electrical system checks, i.e. earth continuity, polarity, resistance to earth and short circuit using a suitable test meter.

(b) Gas Installation

1. The whole of the gas installation, including the meter, MUST be inspected and tested for soundness, and purged in accordance with the recommendations of BS. 6891.
2. Purging air from the gas installation may be expedited by loosening the union on the gas service cock on the boiler and purging until gas is detected.
3. Retighten the union and check for gas soundness.

WARNING. Whilst effecting the required gas soundness test and purging air from the gas installation open all windows and doors, extinguish naked lights and **DO NOT SMOKE.**

43 INITIAL LIGHTING

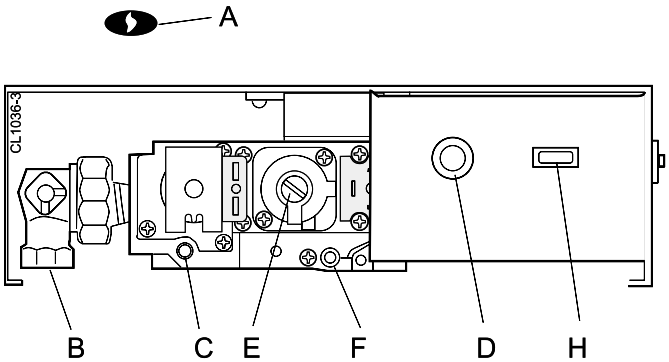

LEGEND

A Sightglass.
B Gas service cock.
C Inlet pressure test point.
D Thermostat knob
E Main burner pressure adjuster.
F Burner pressure test point.
H Boiler mains on/off switch.

TO LIGHT THE BOILER

1. Check that all the drain cocks are closed, and any valves in the flow and return are open.
2. Check that the gas service cock (B) is OPEN and the boiler mains on/off switch is OFF.
3. If the boiler output is to be set to minimum or mid, affix the appropriate indicator label supplied in the hardware pack to the data plate, located on the controls support.
4. **Fitting the Boiler Casing**

   Deluxe Model (LX) - Lift the boiler casing up to the boiler assembly, with the casing top angled forward. Hook the top edge of the boiler casing into the channel on the top of the boiler assembly. Swing the bottom of the casing down until it is flush with the assembly. Lift the glass fascia and pull the sliding catch out to retain the glass in the upper position. Secure with the 2 captive screws. To improve access to the gas valve, remove the controls casing bottom panel by removing its 2 retaining screws. Refer to Frame 44.

   Standard Model - The boiler casing must be refitted with the controls pod casing attached for alignment purposes. Lift the boiler casing up to the boiler assembly, with the casing top angled forward. Hook the top edge of the boiler casing into the channel on the top of the boiler assembly. Swing the bottom of the casing down and secure with the 2 captive screws. To improve access to the gas valve, remove the controls pod casing. Release the controls pod front fixing screws 3 turns only. Remove the pod by pulling it forward to disengage from the keyhole slots. Refer to Frame 44.

   The casing must seat correctly and compress the sealing strip to make an airtight joint. Visually check the side seals but, if side clearances are limited, then check that the top and bottom edges of the casing are correctly located.
5. Slacken the screw in the burner pressure test point (F) and connect a gas pressure gauge via a flexible tube.
6. Switch the electricity supply ON and check that all external controls are calling for heat.
7. Set the boiler thermostat knob (D) to position 6 and the boiler Mains on/off switch to ON. The fan will start. After the fan has run for a few seconds the pilot solenoid valve should open and the intermittent spark commence, continuing until the pilot is established. The main burner will then cross-light smoothly. If this sequence does not occur, refer to the Fault Finding section.
8. Test for gas soundness around ALL boiler gas components using leak detection fluid.
9. Operate the boiler for 10 minutes to stabilise the burner temperature.
10. The boiler is pre-set at the factory to its highest nominal rating but can be range rated to suit the system design requirements. Refer to Table 2 (page 3). Remove the silver threaded protection cap on the top of the regulator. Adjust the main burner pressure adjuster (E) until the required main burner pressure is achieved.
11. Set the boiler mains on/off switch to OFF.
12. Remove the pressure gauge and tube. Retighten the sealing screw in the pressure test point.
13. Turn ON and check for gas soundness at the pressure test point.
14. **Deluxe Model (LX)**
    Refit the controls casing bottom panel and screws.

    Standard Model
    Refit the controls pod and tighten the 2 front fixing screws.
15. **Deluxe Model (LX)**
    Lower the glass fascia to its closed position.

    Standard Model.
    Close the pod door.

44 INITIAL LIGHTING - continued

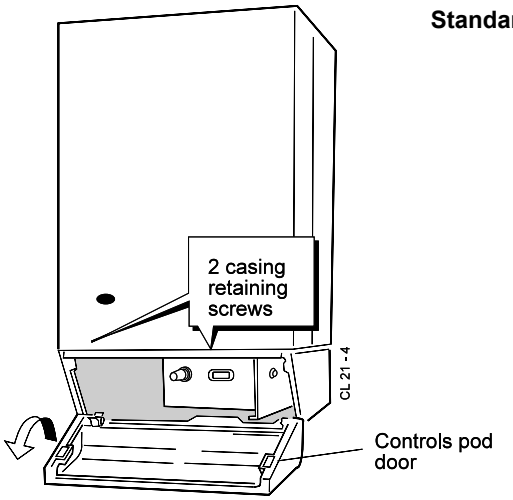

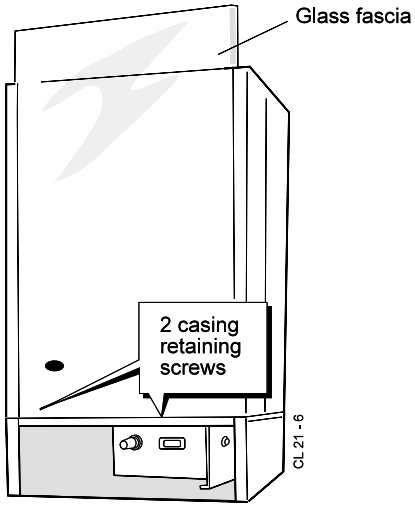

45 GENERAL CHECKS

Make the following checks for correct operation:

1. Set the boiler thermostat knob to position 6 and operate the mains on/off switch. Check that the main burner lights and extinguishes in response.
2. The correct operation of ANY timer and all other system controls should be proved.
   Operate each control separately and check that the main burner or circulating pump, as the case may be, responds.
3. Check that the casing is sealed correctly and compressing the sealing strip all around the casing.
4. **Water Circulating System**
   - **a.** With the system HOT, examine all water connections for soundness.
   - **b.** With the system still hot, turn off the gas, water and electricity supplies to the boiler and drain down, in order to complete the flushing process.
   - **c.** Refill and vent the system, clear all air locks and again check for water soundness.
   - **d.** Balance the system.
5. Finally, set the controls to the user's requirements.

The temperatures quoted below are approximate and vary between installations.

Knob Setting	Flow Temperature °C	°F
1	54	130
2	60	140
3	66	150
4	71	160
5	77	170
6	82	180

WARNING. The boiler MUST NOT be operated with the casing removed.

46 HANDING OVER

After completing the installation and commissioning of the system the installer should hand over to the householder by the following actions:

1. Hand the User's Instructions to the Householder and explain his or her responsibilities under the Gas Safety (Installation and Use) Regulations 1994,amendments 1996 or rules in force.
2. **Deluxe model (LX)** - Draw attention to the Lighting Instruction label affixed to the controls casing bottom panel.

   Standard Model - Draw attention to the Lighting Instruction label affixed to the controls pod door.
3. Explain and demonstrate the lighting and shutting down procedures.
4. The operation of the boiler and the use and adjustment of ALL system controls should be fully explained to the Householder, to ensure the greatest possible fuel economy, consistent with household requirements of both heating and hot water consumption.

   Advise the User of the precautions necessary to prevent damage to the system and to the building, in the event of the system remaining inoperative during frosty conditions.
5. Explain the function and the use of the boiler thermostat and external controls.
6. Explain the function of the boiler overheat thermostat and emphasise that if cutout persists, the boiler should be turned off and a registered CORGI installer consulted.
7. Explain and demonstrate the function of time and temperature controls, radiator valves etc., for the economic use of the system.
8. If any Timer Kit is fitted draw attention to the Timer Kit User's Instructions and hand them to the Householder.
9. **After installation, commissioning and customer hand-over instructions please complete the benchmark appliance log book and leave this with the customer.**
10. Stress the importance of regular servicing by a CORGI registered installer and that a comprehensive service should be carried out AT LEAST ONCE A YEAR.

47 SCHEDULE

To ensure the continued safe and efficient operation of the appliance, it is recommended that it is checked at regular intervals and serviced as necessary. The frequency of servicing will depend upon the installation condition and usage, but should be carried out at least annually. It is the law that any service work must be carried out by a CORGI registered installer.

a. Light the boiler and, using the flue sampling point (provided on the top RH side of the back panel) carry out a pre-service check, noting any operational faults.

b. Clean the main burner.

c. Clean the heat exchanger.

d. Clean the main and pilot injectors.

e. Remove any debris from inside the base of the casing.

f. Check that the flue terminal is unobstructed and that the flue system is sealed correctly.

g. If the appliance has been installed in a compartment, check that the ventilation areas are clear.

The servicing procedures are covered more fully in Frames 48 to 52 and must be carried out in sequence.

WARNING. Disconnect the electrical supply and turn off gas supply.

IMPORTANT. After completing the servicing or exchange of components always test for gas soundness and carry out functional checks as appropriate.

When work is complete the casing MUST be correctly refitted, ensuring that a good seal is made.

The boiler must NOT be operated if the casing is not fitted.

Note. *In order to carry out either servicing or replacement of components, the boiler casing must be removed. Refer to Frame 48.*

48 BOILER CASING REMOVAL

1. **Deluxe model (LX)** -Lift the glass fascia and pull the sliding catch out to retain the glass in the upper position. Release the 2 captive screws at the bottom of the casing. Swing the bottom of the boiler casing out until the controls pod casing has cleared the controls, then unhook the casing top from the back panel. Retain the casing in a safe place.

   Standard model - Open the controls pod door and release the 2 captive screws at the bottom of the casing. Swing the bottom of the boiler casing out until the controls pod casing has cleared the controls, then unhook the casing top from the back panel. Retain the casing in a safe place.Where the removal of the casing is impaired by a pelmet, the instruction in Frame 2 (page 6) should be followed.

2. Isolate the gas supply at the service cock fitted to the boiler.

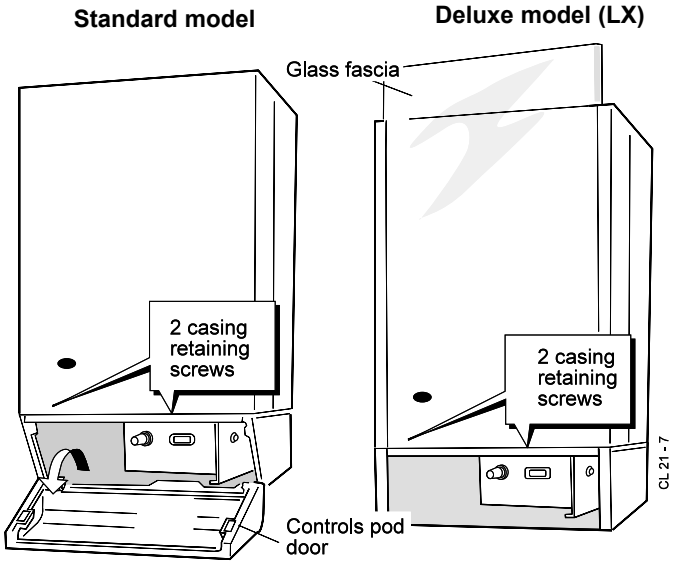

49 BURNER AND AIR BOX REMOVAL

1. Remove the screw retaining the front burner support strap to the combustion chamber. Remove the M5 pozi situated at the LH bottom rear of the burner and pull the burner downwards to disengage the retention tab. Remove the burner to a safe place for inspection and cleaning.

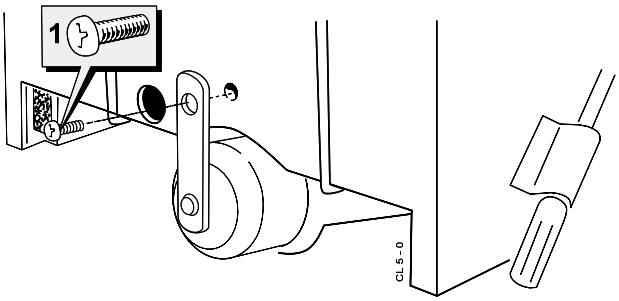

2. Remove the control box fixing screw. Pull the box forward and downward to disengage.

3. Pull the HT lead connection off the printed circuit board and pull the lead upwards through the bottom panel grommet.

4. Remove the 4 screws retaining the air box/pilot assembly to the vertical manifold and carefully remove the assembly.

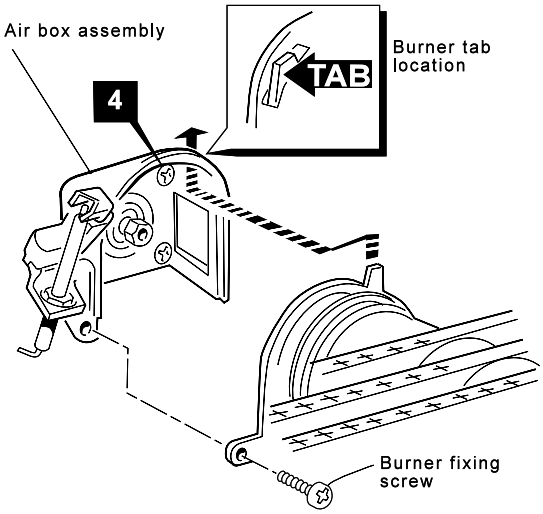

50 CLEANING THE FAN ASSEMBLY / THE FLUEWAYS

1. Remove the 2 silicon rubber tubes from the fan sensing points.
2. Disconnect the fan leads.

3a. **Rear flue**
Slacken the M4 screw securing the flue connector to the fan. Disconnect the connector from the fan and slide into the flue.

3b. **Side or top flue**
Slacken off two M4 screws securing the flue elbow and flue connector. Disconnect the flue connector from the elbow and slide into the flue. Remove the flue elbow.

4. Disconnect the silicon rubber tube from the rear of the collector hood.
5. Slacken the two M5 nuts on the front tie rods, releasing the tie rods from the combustion chamber.
6. Remove the M5 central fixing screw at the rear of the collector hood and remove collector hood/fan assembly.
7. Check that the fan impeller runs freely. Remove any debris from the impeller with a soft brush.
8. Remove the flue baffles.

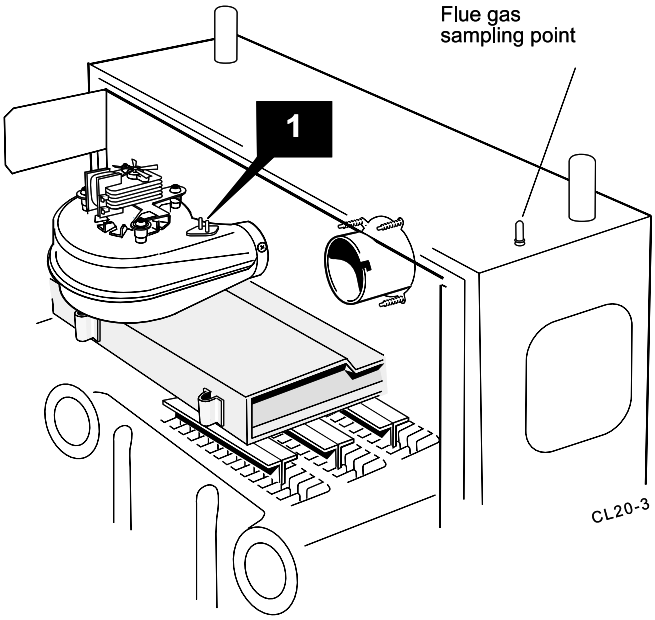

9. Remove all loose deposits from the heat exchanger, particularly between the fins, using a suitable brush.
10. Re-assemble in reverse order, ensuring the fan leads and 3 sensing tubes are reconnected.

51 CLEANING THE BURNER AND PILOT ASSEMBLY

1. Brush off any deposits that may have fallen on to the burner head (ensuring the flame ports are unobstructed) and remove any debris that may have collected.
Note. *Brushes with metallic bristles must not be used.*
2. Remove the main burner injector and ensure there is no blockage or damage. Clean or renew as necessary.
3. Refit the injector, using an approved jointing compound sparingly.
4. Inspect the pilot burner and ignition / detection electrode. Ensure that they are clean and in good condition.

Check that:

a. The pilot burner injector is not blocked or damaged. Refer to Frame 58 for removal details.
b. The pilot burner is clean and unobstructed.
c. The ignition / detection electrode is clean and undamaged.
d. The ignition / detection lead is in good condition.
e. The spark gap is correct (Frame 58). Clean or renew as necessary.

Note. *The pilot shield is located around the pilot assembly bracket and is located by the electrode retaining nut.*

52 RE-ASSEMBLY

Re-assemble the boiler in the following order.

1. Refit the flue baffles.
2. Inspect the collector hood rope gasket and replace, if necessary, ensuring that the self adhesive rope is fitted centrally on to the lip of the collector hood / fan assembly. The boiler efficiency will be adversely affected if incorrectly fitted. Refit the collector hood and retain with the 2 front tie rods and the rear central fixing screw. Tighten the nuts and screw. Ensure that the sealing gasket is compressed. Refit the pressure pipe.
3. Refit the positive pressure tubes on the top of the fan housing. Reconnect the electrical leads.
4. Refit the air box assembly and burner. Ensure that the burner front fixing is refitted.
5. Refit the control box.
6. Reconnect the gas supply and the electrical wiring. Refer to Frames 34 & 36.
7. Check the sightglass in the boiler casing. Clean or renew as necessary. Refer to Frame 55.
8. Check for gas soundness. Check the gas service cock and pressure test point.
9. Refit the boiler casing (Refer to Frame 43, item 4). Note that it is not necessary to disturb the controls casing pod.
10. **Deluxe model (LX)**
Push the sliding catch in and lower the glass fascia to the closed position.

Standard model
Close the controls pod door.

53 GAS PRESSURE ADJUSTMENT

PILOT

The pilot is factory set to maximum and no further adjustment is possible. If, after removing and checking the injector (as detailed in Frame 58) and ensuring that there is an inlet pressure of 20 mbar available, the pilot does not light then contact **Caradon Plumbing Limited.**

Relight in accordance with 'Initial Lighting', Frame 43.

MAIN BURNER

After any servicing, reference should be made to Table 2 which quotes details of the rated output with the related burner setting pressure and the heat input. Any required adjustments should be made by using the pressure adjustment screw.

Refer to 'initial Lighting', Frame 43.

REPLACEMENT OF PARTS

54 GENERAL

When replacing any component:

1. Isolate the electricity supply.
2. Turn OFF the gas supply.
3. Remove the boiler casing. Refer to Frame 48.

IMPORTANT. When work is complete the casing must be correctly refitted, ensuring that a good seal is made.

Note. *In order to assist fault finding, the control box printed circuit board is fitted with 2 indicator lights which represent the following boiler conditions:*

Neon I3. Mains electricity ON.

Neon SG1. Flashes to indicate ignition operation (stops after detection).

The boiler MUST NOT be operated if the casing is not fitted.

55 SIGHTGLASS REPLACEMENT

1. Refer to Frame 54.
2. Unfasten the 2 nuts and washers holding the sightglass assembly to the casing front panel.
3. When fixing the new assembly ensure that the parts are in the correct order. The frame must have the return edge at the bottom.
4. Retighten the 2 nuts to ensure an airtight seal. Do NOT overtighten.
6. Replace the boiler casing. Refer to Frame 52.

Note. *Standard model illustrated. For the deluxe model (LX) slide the glass fascia out before removing the sightglass assembly. Refit the glass fascia after refitting the new sightglass assembly.*

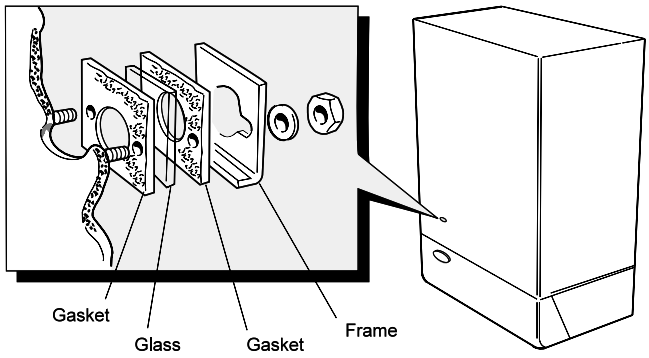

56 OVERHEAT THERMOSTAT REPLACEMENT

Refer to Frames 37, 54 & 70.

1. Remove the control box fixing screw.

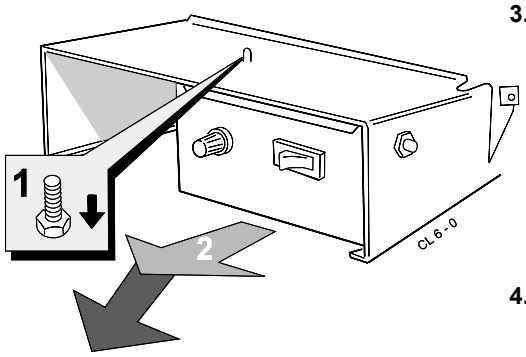

2. Pull the box forward and downward to disengage.
3. To remove the overheat thermostat pull off the electrical connections at the thermostat. Remove the backnut retaining the thermostat to the bracket. Remove the thermostat from the heat exchanger pocket.
4. Re-assemble in reverse order.

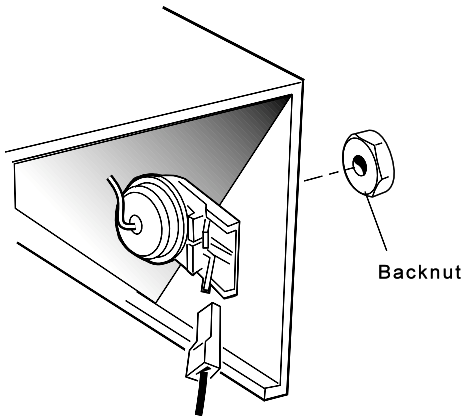

57 THERMOSTAT CONTROL, THERMISTOR SENSOR LEAD and ON/OFF SWITCH REPLACEMENT

Refer also to Frame 54.

Remove the control box fixing screw (B). Pull the box forward and downward to disengage.

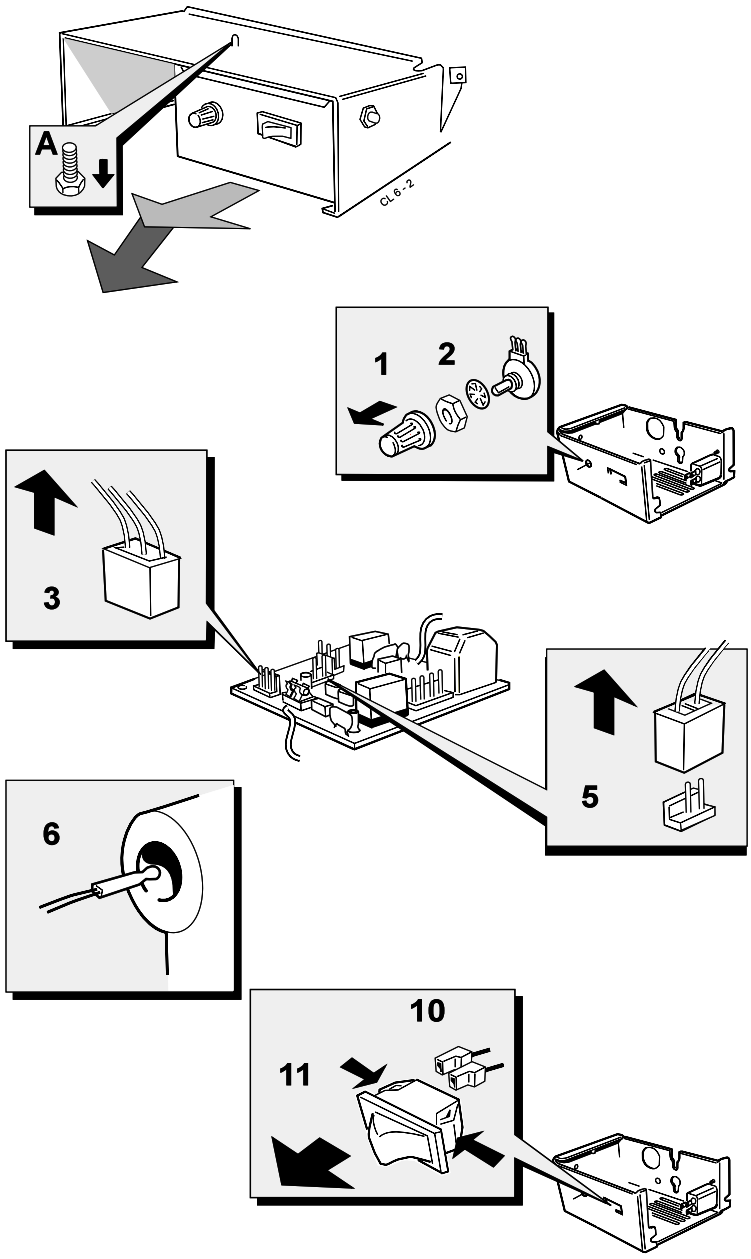

Thermostat control

1. Pull the knob off the shaft.
2. Remove the backnut securing the thermostat control to the control box.
3. Pull off the Molex connector from the printed circuit board.
4. Replace and re-assemble in reverse order.

Thermistor sensor lead

5. Pull the sensor lead connector off the printed circuit board.
6. Remove the sensor from the heat exchanger pocket and unclip from the back panel.
7. Remove the strain relief bush from the back panel base.
8. Remove the sensor lead through the grommet in the control box.
9. Replace and re-assemble in reverse order.

On/off switch

10. Disconnect the electrical connectors from the rear of the switch.
11. Press in the 2 side retaining clips and remove the switch.
12. Re-assemble in reverse order.

58 PILOT BURNER REPLACEMENT

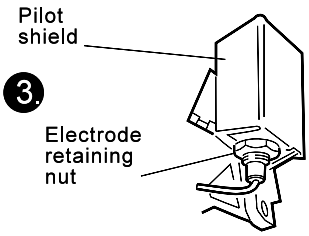

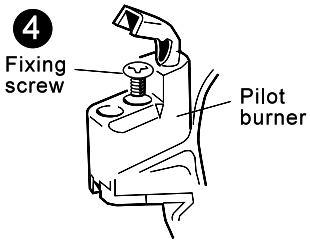

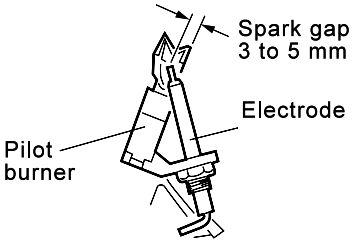

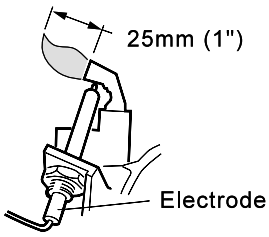

1. Refer to Frame 54.
2. Remove the burner and air box assembly. Refer to Frame 49.
3. Remove the electrode retaining nut and remove the pilot shield and electrode.
4. Unscrew the central pilot fixing screw and lift the pilot clear of the pilot injector. The pilot injector may now be unscrewed if required.
5. Replace the pilot burner (injector if necessary) and retain with the M4 screw previously removed. Ensure that the copper sealing washer is replaced when refitting the pilot injector.
6. Replace the electrode and pilot shield, retaining both with the electrode nut. Check the spark gap.
7. Replace the box assembly.
8. Replace the burner.
9. Replace the boiler casing.
10. The pilot is factory set to maximum and no further adjustment is possible. Ensure that there is an inlet pressure of 20 mbar available. Also check burner ignition and cross-lighting.

59 IGNITION ELECTRODE AND LEAD REPLACEMENT

1. Refer to Frame 54.
2. Remove the burner and air box assembly. Refer to Frame 49.
3. Remove the electrode retaining nut.
4. Remove the pilot shield.
5. Remove the ignition electrode and integral lead.
6. Refit the new electrode and lead in reverse order. Ensure that the pilot shield is replaced.
7. Check the spark gap. Refer to Frame 58.
8. Refit the burner.
9. Replace the boiler casing.
10. Check the pilot ignition.

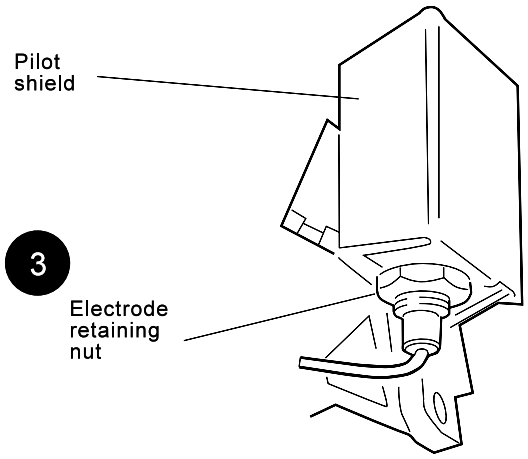

60 MAIN BURNER AND MAIN BURNER INJECTOR REPLACEMENT

1. Refer to Frame 54.
2. Remove the screw retaining the front burner support strap to the combustion chamber.
3. Remove the M5 pozi screw, situated at the left hand bottom rear of the burner. Pull the burner downward to disengage the retention tab and remove the burner.
4. At this stage the main burner injector can be removed, checked, cleaned or replaced as required. Ensure that an approved jointing compound is used sparingly.
5. Fit the new burner, ensuring that the retention tab is correctly located in the air box slot.
6. Refit the M5 retaining screw.
7. Refit the boiler casing.
8. Check the burner for cross-lighting and flame stability.

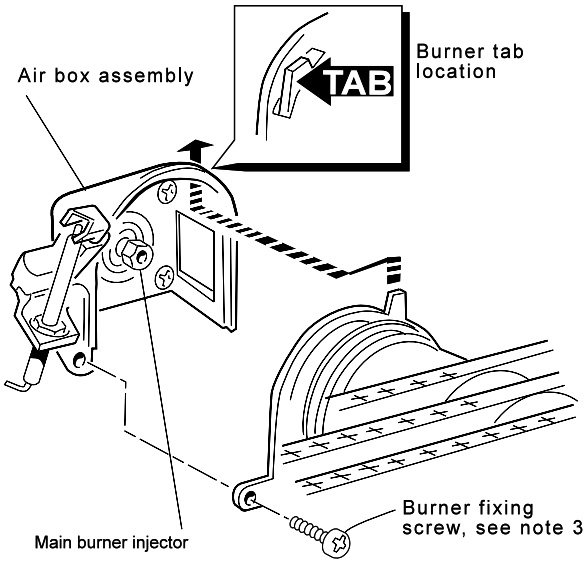

61 GAS CONTROL VALVE REPLACEMENT

Note. *Also refer to Frame 69 of 'Exploded Views' for illustration of the procedure detailed below.*

1. Refer to Frame 54.
2. Remove the burner and air box assembly. Refer to Frame 49.
3. Remove the control box fixing screw. Pull the box forward and downward to disengage.
4. Remove the gas control valve electrical connection.
5. Disconnect and remove the gas union from the gas control valve.
6. Whilst supporting the gas control valve, remove the 2 screws retaining the manifold to the back panel.
7. Remove the gas control / manifold assembly.
8. Remove the 4 screws retaining the manifold to the gas control valve, and fit the manifold to the new gas control valve. Ensure that the new control is fitted the correct way round (an arrow engraved on back indicates the direction of flow).

   Note. *Remove the gas cock stub and refit into the new gas control valve. Use an approved jointing compound on the pipe stub.*
9. Re-assemble in reverse order.
10. Replace the boiler casing.
11. Check the gas valve operation.

62 FAN REPLACEMENT

1. Remove the 2 silicon rubber tubes from the fan sensing points.
2. Disconnect the fan leads.

3a. **Rear flue.** Slacken the M4 screw securing the flue connector to the fan. Disconnect the connector from the fan and slide into the flue.

3b. **Side or top flue.** Slacken off two M4 screws securing the flue elbow and flue connector. Disconnect the flue connector from the elbow and slide into the flue. Remove the flue elbow.

4. Disconnect the silicon rubber tube from the rear of the collector hood.
5. Slacken the two M5 nuts on the front tie rods, releasing the tie rods from the combustion chamber.
6. Remove the M5 central fixing screw at the rear of the collector hood and remove collector hood / fan assembly.
7. Remove the three M4 screws retaining the fan to the collector hood.
8. Re-assemble in reverse order, ensuring the fan leads and 3 sensing tubes are reconnected.

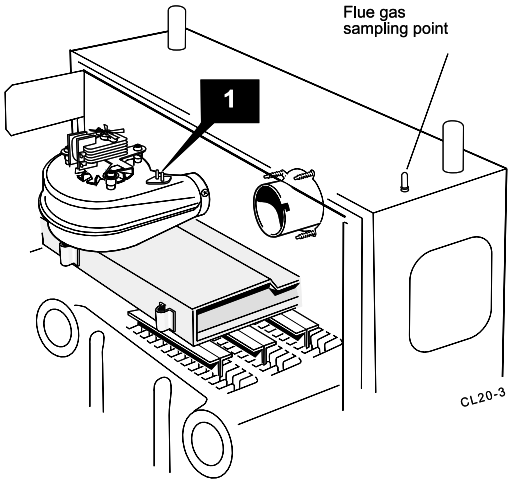

9. Refit the boiler casing.
10. Check the boiler operation.

63 AIR PRESSURE SWITCH (APS) REPLACEMENT

1. Refer to Frame 54.
2. Remove the APS fixing screw.
3. Remove both sensing tubes from the APS.
4. Remove the 3 electrical connections from the APS.
5. Connect the new APS in reverse order.
6. Refit the APS with the fixing screw.
7. Refit the boiler casing.
8. Check the boiler operation.

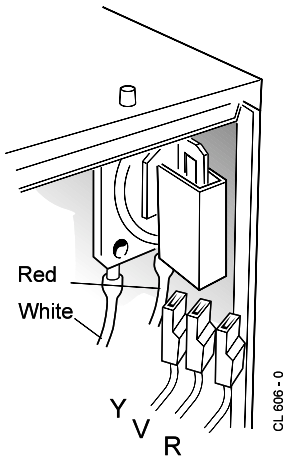

64 PRINTED CIRCUIT BOARD (PCB) REPLACEMENT

Note. *Refer to Frames 69 & 70 of 'Exploded Views' for illustration of the procedure detailed below.*

1. Refer to Frame 54.
2. Remove the control box fixing screw. Pull the box forward and downward to disengage.
3. Remove the HT lead from the PCB
4. Remove the 6 push-in connectors from the PCB.
5. Remove the neutral wire on the PCB from its connection to the back of the socket inside the control box.
6. Remove the earth wire on the PCB from its connection to the earth stud inside the control box.
7. Remove the 2 connections from the on/off switch and remove the switch.
8. Compress the barbs on the PCB stand-offs to release the PCB from the box
9. Fit the new PCB and re-assemble in reverse order, ensuring the correct orientation of the switch.
10. Refit the boiler casing.
11. Check the operation of the boiler.

65 COMBUSTION CHAMBER INSULATION REPLACEMENT

1. Refer to Frame 54.
2. Remove the burner and air box assembly. Refer to Frame 49.
3. Remove the 4 tie rods.
4. Remove the combustion chamber.
5. Remove the 2 side panel retaining brackets.
6. Remove the side insulation panels.
7. Remove the front and rear insulation panels.
8. Fit the new front and rear insulation panels.
9. Fit the new side panels and retain with the brackets and screws previously removed.
10. Re-assemble in reverse order.

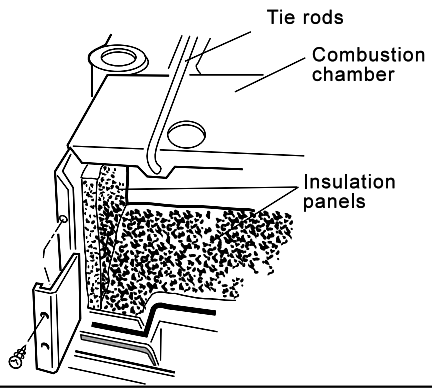

66 HEAT EXCHANGER REPLACEMENT

Note. *Refer to Frame 5 (Boiler assembly - Exploded view) for illustration of the procedure detailed below.*

1. Refer to Frame 54.
2. Remove the burner / air box assembly. Refer to Frame 49.
3. Drain the system.
4. Disconnect the water connections. If compression fittings are used then cut the pipes both above and below the fittings in order to allow the heat exchanger assembly to be removed. Remove the heat exchanger drain plug and drain the residual water into a suitable receptacle.
5. Remove the fan / collector hood assembly. Refer to Frame 50.
6. Remove the combustion chamber by unscrewing the 4 tie rods.
7. Remove the thermostat sensors from the pockets on the heat exchanger by removing the M3 screws and plates.
8. Slacken 3 turns only the 4 heat exchanger / inter-panel retaining screws.
9. Lift the heat exchanger / inter-panel assembly upward and forward to disengage key hole fixings. Pull the assembly downwards to clear the water pipes from the back panel.
10. Remove the 2 rubber sealing grommets from the top of the back panel to facilitate fitting the new assembly.
11. Fit the new heat exchanger assembly, complete with water pipes, and hang it on the key hole slots and screws. Retighten the screws.
12. Replace the 2 rubber sealing grommets.
13. Re-assemble in reverse order.
14. Remake all water connections, ensuring that the compression fittings (if used) are correctly refitted.
15. Fully test all functions, including water and gas soundness.

67 CASING SEAL REPLACEMENT

1. Refer to Frame 54.
2. Remove the old seal from the casing surround and thoroughly clean the casing surfaces.
3. Fit the new self adhesive seals.
4. Replace the boiler casing.

Notes.
The standard model is illustrated. Use the same procedure for casing seal replacement on the deluxe model (LX).

Model 100 FF does not have air deflector baffles fitted to jacket bottom.

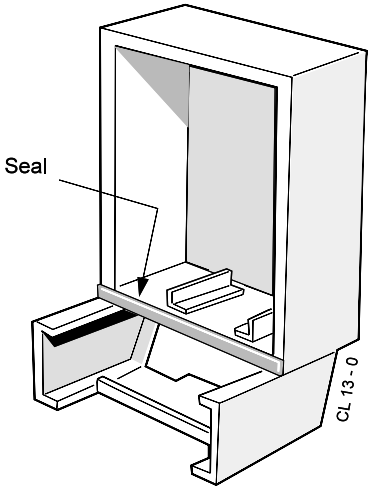

FAULT FINDING

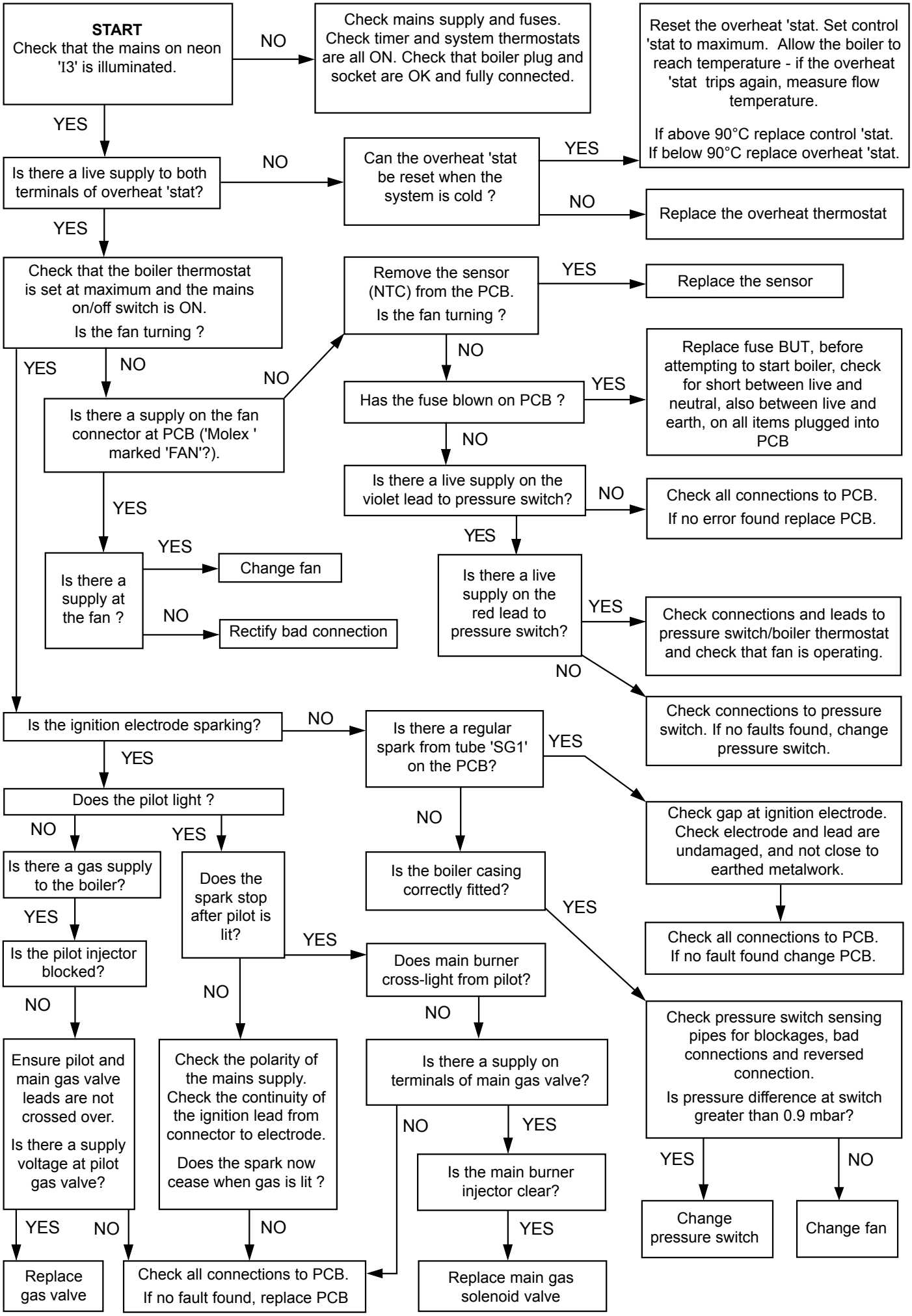

SHORT LIST OF PARTS

The following are parts commonly required due to damage or expendability. Their failure or absence is likely to affect safety or performance of this appliance.

The list is extracted from the British Gas List of Parts, which contains all available spare parts.

The full lists is held by British Gas, **Caradon Plumbing Limited** distributors and merchants.

When ordering spares please quote:

1. Boiler Model
2. Appliance G.C. Number
3. Description
4. Quantity
5. Product Number

Key No.	GC Part No.	Description		Qty.	Product No.
9	308 365	Sightglass assembly kit		1	079602
13		Main burner			
	379 917	AEROMATIC No.AC 19/123 294;	30 FF & 40 FF	1	111 707
	379 918	AEROMATIC No.AC 19/123 293;	50 FF & 60 FF	1	111 708
	379 919	AEROMATIC No.AC 19/123 292;	70 FF, 80 FF & 100 FF	1	111 709
14		Main burner injector			
		Injector 044-323-344-256	30 FF	1	153 884
		Injector 044-323-344-290	40 FF	1	153 885
		Injector 044-323-344-330	50 FF		153 886
	389 587	BRAY Cat. 10 - size 1550;	60 FF	1	111 989
	389 588	BRAY Cat. 10 - size 1850;	70 FF	1	111 990
	398 065	BRAY Cat. 10 - size 2300;	80 FF	1	004 760
		Aeromatic Pt. No. 939021, 4.6mm;	100 FF	1	152 320
14A		Copper washer, Aeromatic 914176(for injector);	30-40-50 & 100 FF	1	152 426
15	397 943	Pilot burner injector: HONEYWELL 4580 1075002 ;	30 FF-80 FF	1	004 982
		Pilot burner injector: HONEYWELL 4580 1075001 ;	100 FF	1	
16	308 358	Pilot burner head Q359A with:			
		Honeywell 4580 1075002 injector	30 FF-80 FF	1	079 599
		Honeywell 4580 1075001 injector	100 FF	1	079 590
18		Gas valve kit VR 4601AA1036, 230 V		1	075 698
19	308 549	Ignition electrode complete with lead and backnut 410 mm lg.		1	111 881
20	E02-653	Control box assembly, including thermostat, knob, PCB, potentiometer and on/off switch		1	151 252
24	308 283	Thermostat knob		1	079 601
25	386 149	Automatic ignition printed circuit board : PACTROL PCB 25 B		1	079 716
27	385 861	Pressure switch: HONEYWELL YAMATAKE C6065 A 1010		1	111 379
28	E02-661	Fan assembly: SIFAN No.WFFB 0221-039	30 FF-80 FF	1	151 586
		SIFAN No.WFFB 0226-028	100 FF	1	
33	E04-503	Boiler casing assembly complete with sightglass assy, insulation & M5 x 16 dogpoint pozi pan hd (Stan'd model only)	30 FF-80 FF	1	075 391
			100 FF	1	075 523
36		Controls casing door with Lighting Instructions (Standard model only)		1	170 696
37	E04-504	Casing seal pack complete with screws		1	075 392
51	386 144	Overheat thermostat, RANCO LM7 P 8508		1	113 200
52	308 622	Glass fascia FF (Deluxe model only)		1	112 734
53	308 624	Plastic fascia trim FF (Deluxe model only) - BEIGE		2	138 249
54	308 623	Plastic fascia trim FF (Deluxe model only) - WHITE		2	138 405
55	E04-509	Boiler casing assembly - white stove enamel with sightglass and foil insulation (Deluxe model only)		1	075 393
56	-	Controls casing bottom panel		1	138 267

69 BURNER ASSEMBLY - Exploded View

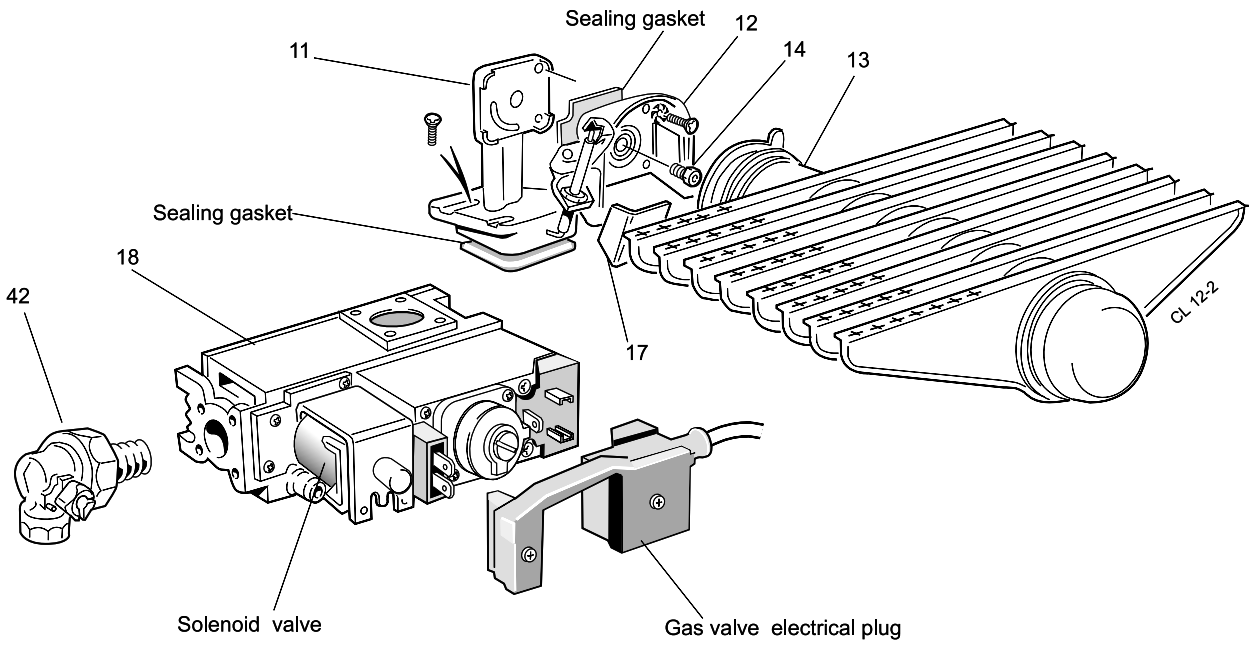

LEGEND

(Numbers up to 51 relate to the B.G. spares list)

11. Burner manifold

12. Air box and pilot assembly.

13. Main burner.

14. Main burner injector.

17. Pilot shield.

18. Gas control valve.

42. Gas service cock.

70 CONTROL BOX - Exploded View

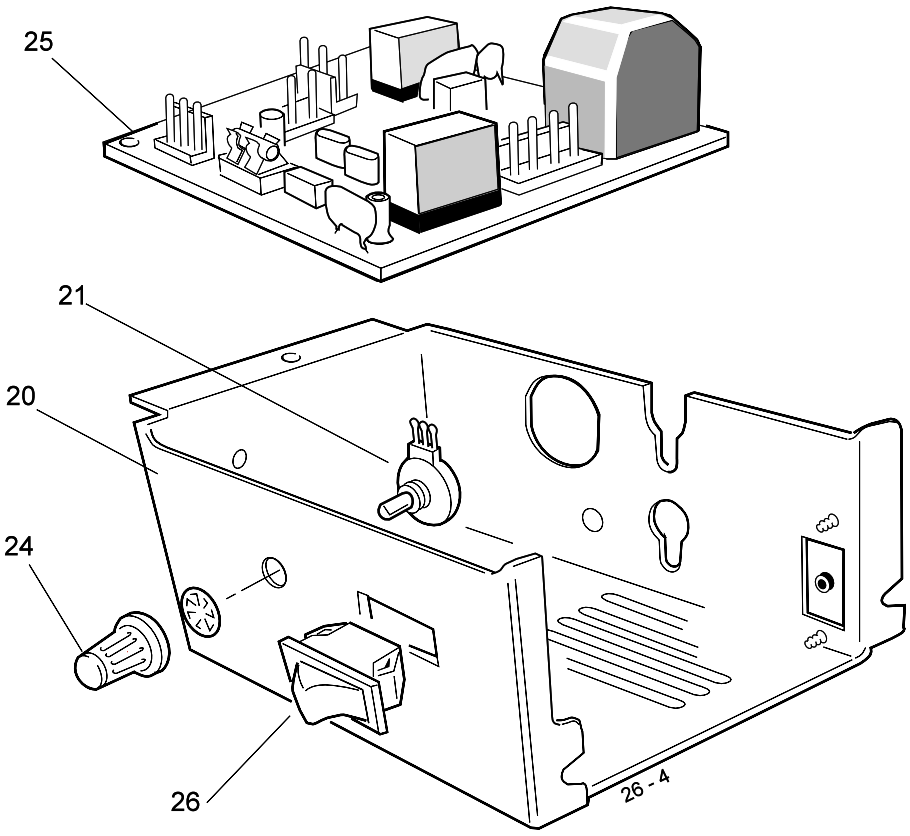

LEGEND

(Numbers up to 51 relate to the B.G. spares list)

20. Control box.

21. Thermostat potentiometer.

24. Thermostat knob.

25. Printed circuit board.

26. Mains on/off switch.

71 BOILER CASING ASSEMBLY

Standard model

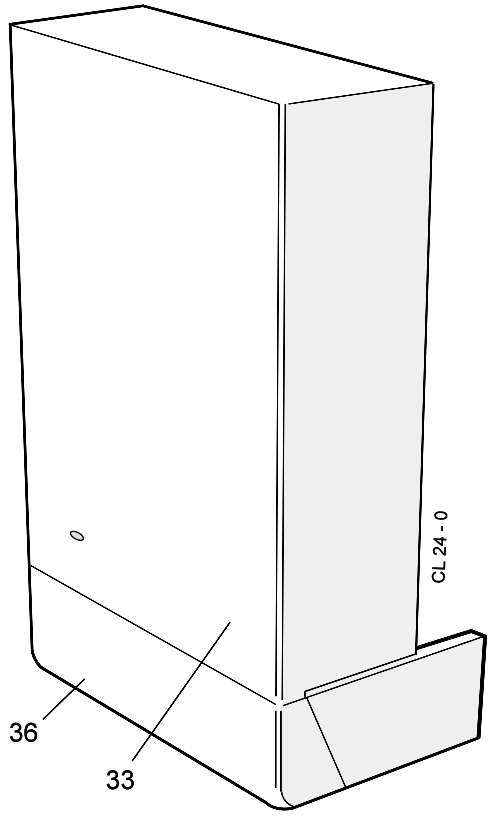

Deluxe model (LX)

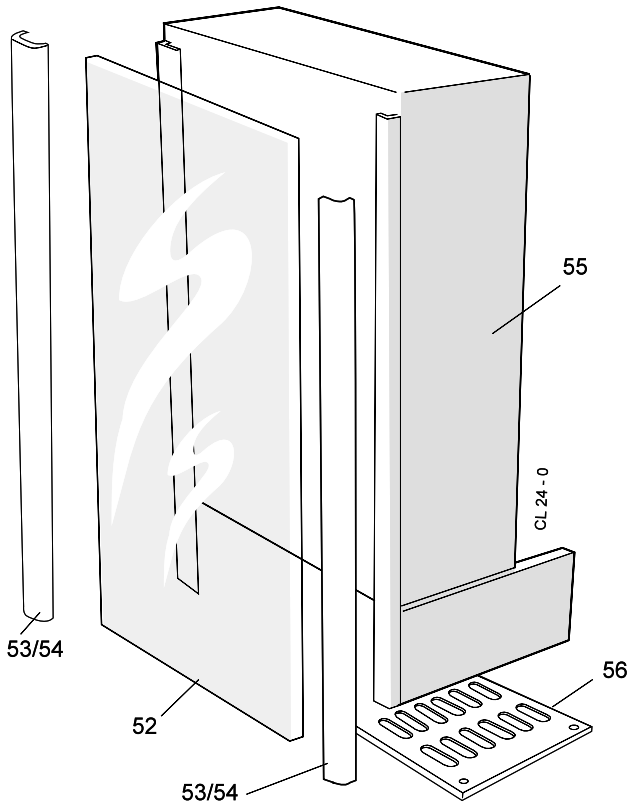

72 SHORT PARTS LIST

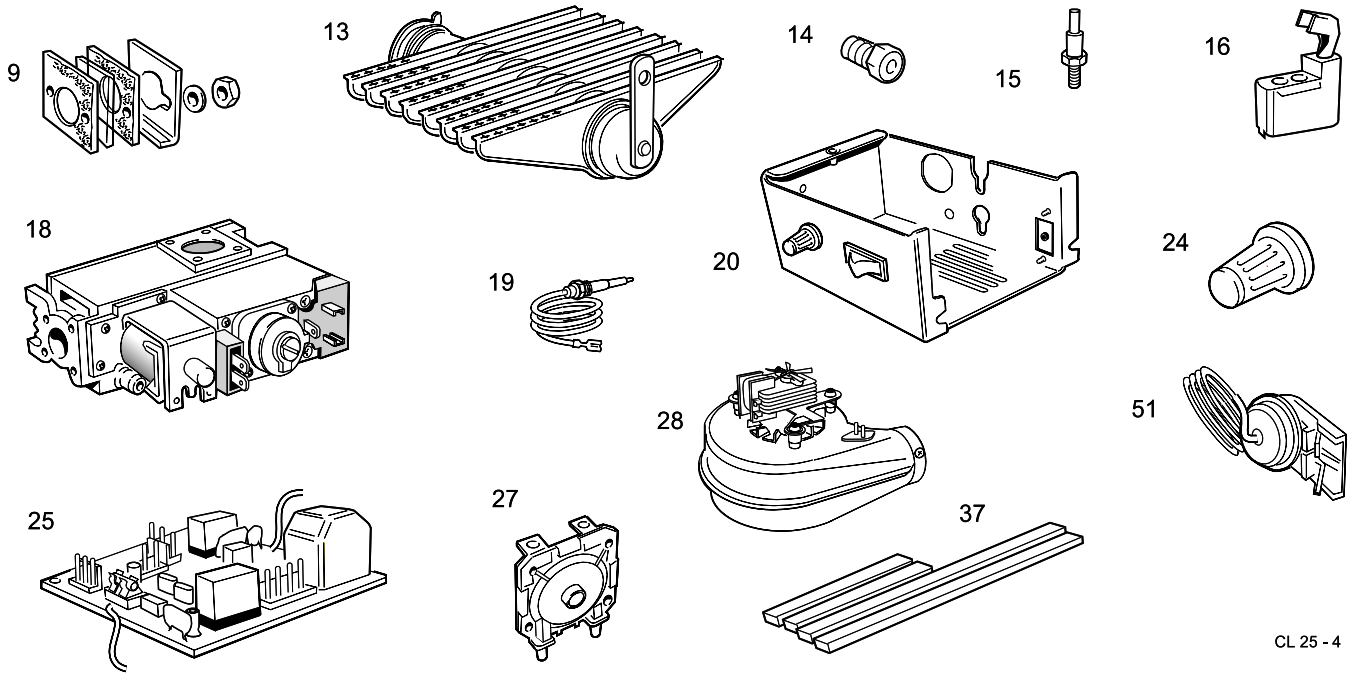

THIS SYMBOL IS YOUR ASSURANCE OF QUALITY

These appliances are designed for use with Natural Gas only. They have been tested and conform with the provisions of BS. 6332 and BS. 5258.

The code of practice for the installation, commissioning & servicing of central heating systems

LXFF.87/AQ/220
LXRS.87/AQ/221
FF.87/AP/107
RS.87/AP/108

Natural Gas appliances are service listed by British Gas

Technical Training

The Caradon Plumbing Limited Technical Training Centre offers a series of first class training courses for domestic, commercial and industrial heating installers, engineers and system specifiers.

For details of courses please ring: *01270 413624*

CERTIFIED PRODUCT
Manufactured under a BS EN ISO 9001:1994 Quality System accepted by BSI.

Caradon Plumbing Limited pursues a policy of continuing improvement in the design and performance of its products. The right is therefore reserved to vary specification without notice.

February 2000 UIN 153 956 A03

Caradon Plumbing Limited, P.O. Box 103, National Ave, Kingston upon Hull, HU5 4JN. Telephone: 01482 492 251 Fax: 01482 448 858. Registration No. London 322 137. Registered Office: National Avenue, Kingston upon Hull, HU5 4JN. *A subsidiary of Caradon p.l.c*

Henrad Installer/Technical Helpline: 01482 498663

YOUR FEEDBACK

and your chance to win a free boiler

At Henrad we've been leaders in the design and engineering of robust and reliable boilers for over 90 years. We want to continue as leaders by listening to your suggestions for how to improve our boilers and our service. We will be giving away a free boiler for the five best ideas every year (to be selected by our Technical Director). Please complete this form, using extra sheets if required, and post it or fax it to us on 01482 498699.

Boiler details

Model / Size (details on control panel door)

Date of Installation

Installer details

Name

Address

Post Code

Telephone (*Please include STD code*)

How I would improve this boiler:

My general comments for Henrad:

Caradon
Plumbing Solutions

Henrad Installer/Technical Helpline: 01482 498663

Further information

If you would like information about Henrad Boilers please complete this sheet and fax it to us on 01482 498699 or post it to Caradon Plumbing Limited, PO Box 103, National Avenue, Kingston upon Hull, HU5 4JN.

Installer details

Name

Address

Post Code

Telephone (*Please include STD code*)

General information required

- ☐ *Please send me details of Henrad Training Courses.*
- ☐ *Please arrange for a technical representative to contact me.*
- ☐ *Please arrange for me to join an Henrad factory tour.*

Range guides required

- ☐ *The Henrad Guide: a specifier's and installer's introduction to the Henrad domestic boiler range.*
- ☐ *The Henrad Householders Guide: to assist the installer when presenting to his/her customers.*

Technical manuals required

- ☐ *The Henrad C FF combi boilers*
- ☐ *The Henrad WH FF wall hung boiler*
- ☐ *The Henrad WH LX FF deluxe wall hung boiler*
- ☐ *The Henrad FS FF floor standing boiler*
- ☐ *The Henrad SE FF heat-saving boiler*
- ☐ *The Henrad CC FF combi boiler*
- ☐ *The Henrad SEC FF super efficiency combi boiler*

Caradon
Plumbing Solutions

Caradon Plumbing Limited, PO Box 103, National Avenue, Kingston upon Hull, HU5 4JN. Telephone: 01482 492251 Fax: 01482 448858.

Henrad Installer/Technical Helpline: 01482 498663

U.I.N. 153 956 A0