back

installation and servicing

icos

Your Ideal installation and servicing guide

See reverse for **icos** users guide

For details of document amendments, refer to page 3

HE30, HE36

When replacing any part on this appliance, use only spare parts that you can be assured conform to the safety and performance specification that we require. Do not use reconditioned or copy parts that have not been clearly authorised by Ideal Boilers.

January 2008 UIN 202414 A06

For the very latest copy of literature for specification purposes please visit our website www.idealboilers.com where you will be able to download the relevant information in pdf format.

Ideal BOILERS
The High Efficiency Pioneers

DOCUMENT AMENDMENTS

Relevant Installation changes implemented in this book from Mod Level ..... A05 (Oct 06) to **A06** (Jan 08)

- **Various Changes**
  Company Name Change.

- **Page 9, Electrical Supply**
  Note for fan voltage.

- **Page 21, Frame 25 - Condensate Pipe Termination Configurations**
  Statement added with ref. to termination into a down pipe.

- **Page 20 & 21, Frames 24 & 25 - Condensate Pipe Termination Configurations**
  BS6798 recommends that a second trap and an air break are required where the siphon trap within the boiler is less than 75mm for configuration 2 and 3.

- **Page 30, Frame 41 - Initial Lighting**
  Display code “P” added to “The Display” paragraph.

- **Page 45, Frame 70 - L... F... (Board Error)**
  Addition of new flow chart.

- **Page 46, Frame 72 - L... A... (Overheat Error)**
  Note added.

- **Page 47, Frame 76 - H9/L9 Flue Gas Overheat**
  Note added.

- **Page 48 - Short List of Parts**
  Part number change to PCB Primary Control.

- **Users Guide, Page 2 - Important Notes**
  2 new bullet points added.

- **Users Guide, Page 2 - Operation**
  Addition of display code “P”.

Ideal Stelrad Group reserve the right to vary specification without notice

GENERAL

Table 1 - Boiler Data

Boiler Size		HE30, HE36
Gas supply type and connection		2H-G20-20 mbar Rc½ (½" BSP Female)
Injector size		Stereomatic 5.6mm dia.
Flow connection		28mm copper
Return connection		28mm copper
Flue terminal diameter	mm (in.)	100 (4)
Maximum static water head	m (ft.)	30.5 (100)
Minimum static water head	m (ft.)	0.45 (1.5)
Electrical supply		230 V ~ 50 Hz
Boiler power consumption		42W
Fuse rating		External: 3A Internal: T3.15A L250 V
IP rating		IP20
Water content	litre (gal.)	4.7 (1.0)
Packaged weight	kg (lb.)	56.2 (124)
Maximum installation weight	kg (lb.)	52.6 (116)
Boiler size	Height mm (in.)	645 (25 ½")
	Width mm (in.)	450 (17 ¾")
	Depth mm (in.)	410 (16")

Table 2 - Performance Data

Boiler Size			HE 30 Max	HE 36 Max	HE 30-36 Min
Boiler input 'Q' =	Nett CV	kW Btu/h	30.7 104,700	37.5 128,000	10.6 36,200
	Gross CV	kW Btu/h	34.0 116,000	41.6 142,000	11.8 40,300
	Gas consumption	l/s (cu.ft/h)	0.88 (111.9)	1.07 (136.0)	0.30 (38.4)
Boiler output 'P' =	70 °C Mean water temperature	kW Btu/h	30.1 102,700	37.0 126,200	10.4 35,500
	40 °C Mean water temperature	kW Btu/h	32.8 111,800	39.8 135,800	11.4 38,900
Seasonal efficiency (SEDBUK) *		Band A	[90.7]%	[90.7]%	-
Seasonal boiler efficiency (Building Regs L2)			95.9	96.7	-
NOx classification			Class 5		

* The value is used in the UK Government's Standard Assessment Procedure (SAP) for energy rating of dwellings. The test data from which it has been calculated have been certified by a notified body.

Note.

Gas consumption is calculated using a calorific value of 38.7 MJ/m³ (1038 Btu/ft³) gross or 34.9 MJ/m³ (935 Btu/ft³) nett. To obtain the gas consumption at a different calorific value:-

a. *For l/s - divide the gross heat input (kW) by the gross C.V. of the gas (MJ/m³)*

b. *For ft³/h - divide the gross heat input (Btu/h) by the gross C.V. of the gas (Btu/ft³)*

Key to symbols

GB = United Kingdom **IE** = Ireland (Countries of destination)

PMS = Maximum operating pressure of water

C_{13} C_{33} = A room sealed appliance designed for connection via ducts to a horizontal or vertical terminal which admits fresh air to the burner and discharges the products of combustion to the outside through orifices which, in this case, are concentric. The fan is up stream of the combustion chamber.

I_{2H} = An appliance designed for use on 2nd Family gas, Group H only.

CAUTION. To avoid the possibility of injury during the installation, servicing or cleaning of this appliance, care should be taken when handling edges of sheet steel components.

icos

Natural Gas only

Boiler size	G.C. Appliance No. (Benchmark No.)	PI No.
HE30	41-399-10	87 BQ 79
HE36	41-399-16	87 BQ 79

Destination Countries: GB, IE

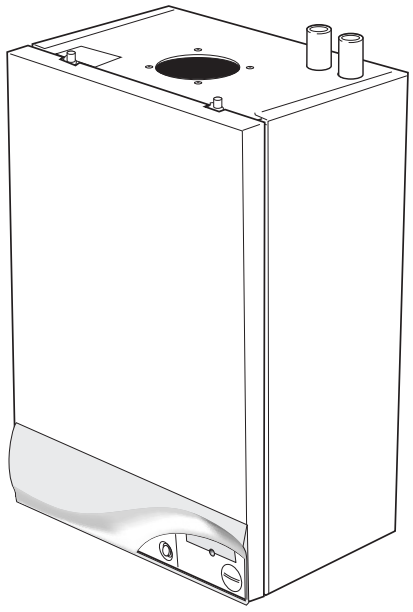

CONTENTS

Air Supply 9
Benchmark Commissioning Checklist 54
Boiler Clearances 6
Boiler Exploded Diagram 14
Electrical Connections 26
Electrical Supply 9
Electrical Wiring Diagrams 28
Extension Ducts - Fitting 19
Fault Finding 44
Flow Wiring Diagram 28
Flue Fitting 18
Flue Installation Requirements 8
Gas Safety Regulations 8
Gas Supply 8
Initial Lighting 30
Installation 14
Mandatory Requirements 7
Safe Handling 7
Servicing 32
Short List of Parts 50
Terminal Guards 8
Thermostatic Radiator valves 9
Water and Systems 10
Water Connections 6
Water Treatment 13

For GB, to comply with Building Regulations Part L1 (Part J in Scotland) the boiler should be fitted in accordance with the manufacturer's instructions. Self-certification that the boiler has been installed to comply with Building Regulations can be demonstrated by completing and signing the Benchmark Commissioning Checklist.

BENCHMARK COMMISSIONING CHECKLIST DETAILS

Boiler — **Page**

- Make and model 5
- Appliance serial no. on data badge 14
- SEDBUK No. % 4

Controls

- Time and temperature control to heating 29
- Time and temperature control to hot water 29
- Heating zone valves ..... n/a
- TRV's 9
- Auto bypass 9
- Boiler interlock 9

For all boilers

- Flushing to BS.7593 13
- Inhibitor 13

Central heating mode

Heat input ..... to be calculated

Page

- Burner operating pressure ..... n/a
- Central heating flow temp. ..... measure and record
- Central heating return temp. ... measure and record

For combination boilers only

- Scale reducer ..... n/a

Hot water mode

- Heat input ..... n/a
- Max. operating burner pressure ..... n/a
- Max. operating water pressure ..... n/a
- Cold water inlet temp ..... n/a
- Hot water outlet temp. ..... n/a
- Water flow rate at max. setting ..... n/a

For condensing boilers only

- Condensate drain 20

For all boilers: *complete, sign & hand over to customer*

For assistance see Technical Helpline on the back page

NOTE TO THE INSTALLER: COMPLETE THE BENCHMARK COMMISSIONING CHECKLIST AND LEAVE THESE INSTRUCTIONS WITH APPLIANCE

benchmark™

1 BOILER WATER CONNECTIONS

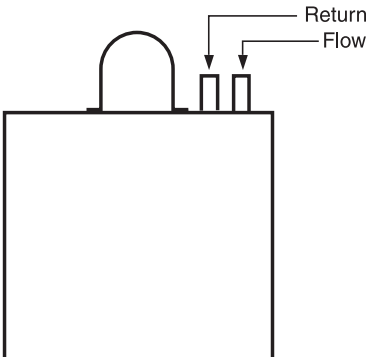

The boiler flow and return pipes (28mm) are supplied fitted to the boiler ready for top connection.

The flow and return pipes should be continued in 28mm while the system load is above 60,000 Btu (17.6 kW). Below which they may be reduced to 22mm.

Notes.

a. *This appliance is NOT suitable for use with a direct hot water cylinder.*

b. *If the boiler is to be used on a sealed system an overheat thermostat is fitted as standard*

2 BOILER CLEARANCES

The following minimum clearances must be maintained for operation and servicing.

Additional space will be required for installation, depending upon site conditions.

Side and Rear Flue

a Provided that the flue hole is cut accurately, e.g. with a core drill, the flue can be installed from inside the building where wall thicknesses do not exceed 600mm (24"). Where the space into which the boiler is going to be installed is less than the length of flue required the flue must be fitted from the outside.

Installation from inside ONLY

b. If a core boring tool is to be used inside the building the space in which the boiler is to be installed must be at least wide enough to accommodate the tool.

SIDE FLUE ONLY	
Horizontal length of flue from centre line of boiler to outside wall	Top clearance required (MIN.) Dim. A
0.5 m	165 mm (6 1/2")
1.0 m	170 mm (6 11/16)
1.5 m	185 mm (7 1/4")
2.0 m	200 mm (7 7/8")
2.5 m	210 mm (8 1/4")
3.0 m	225 mm (8 7/8")

REAR FLUE ONLY
MIN. Top clearance required = 145 mm

all dimensions in mm

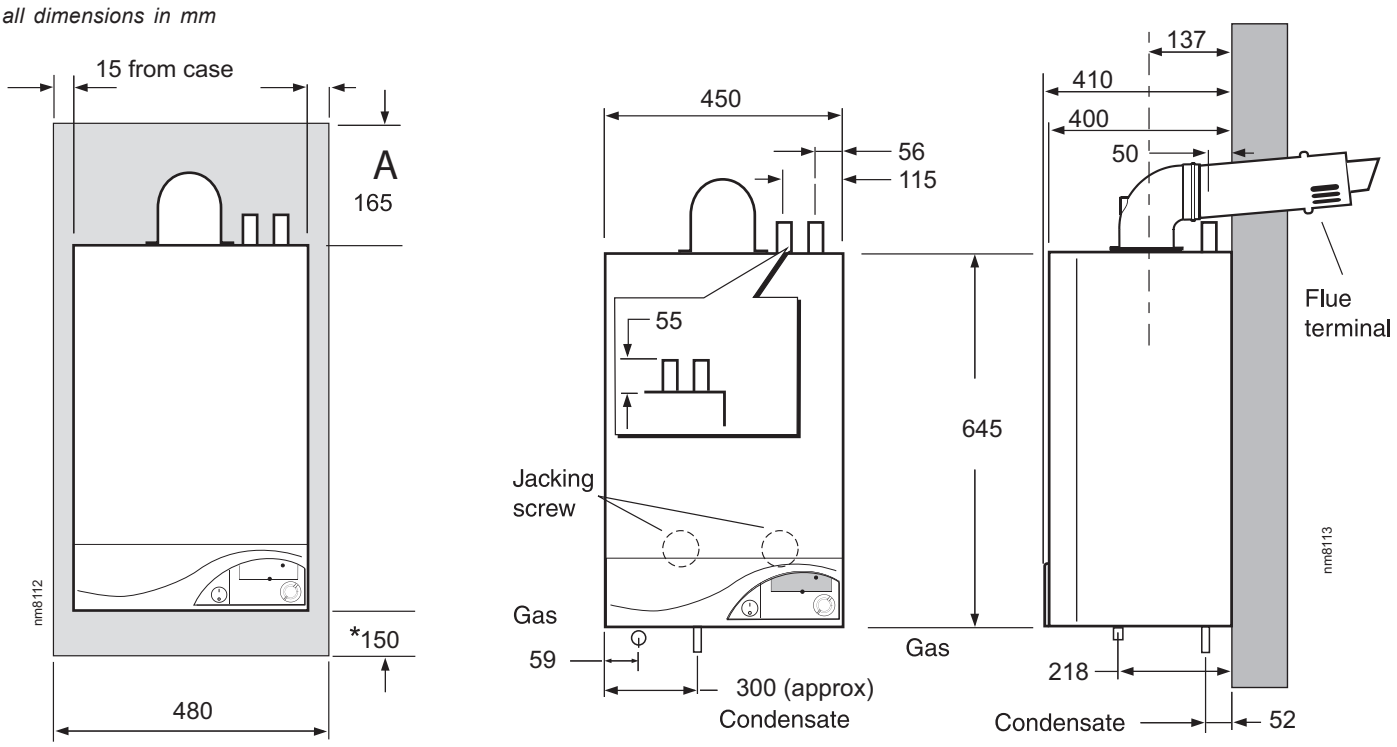

Front clearance

The minimum front clearance when built in to a cupboard is 5mm from the cupboard door but 450mm overall clearance is still required, with the cupboard door open, to allow for servicing.

* **Bottom clearance**
after installation can be reduced to 5mm. However, 150mm must be available for servicing.

INTRODUCTION

The icos range of boilers are a fully automatically controlled, wall mounted, low water content, balanced flue, fanned, condensing gas boiler. It has full modulating central heating outputs of :

HE30 10.4 kW (35,600 Btu/h) to 30.1 kW (102,700 Btu/h).

HE36 10.4 kW (35,600 Btu/h) to 37 kW (126,200 Btu/h).

Due to the high efficiency of the boiler a plume of water vapour will form at the flue terminal during operation depending on external conditions.

The boiler casing is of white painted mild steel with the user controls capable of being mounted remotely from the boiler, if the option is required.

The heat exchanger is of cast aluminium.

Note.

These boilers cannot be used on systems which include gravity circulation.

The boilers are suitable for connection to fully pumped, open vented or sealed water systems. Adequate arrangements for completely draining the system by provision of drain cocks MUST be provided in the installation pipework.

OPERATION

When there is a demand for heat, the heating system is supplied at the selected temperature of between 30°C and 82°C.

The boiler features a comprehensive diagnostic system which gives detailed information on the boiler status when operating, and performance of key components to aid commissioning and fault finding.

SAFE HANDLING

This boiler may require 2 or more operatives to move it to its installation site, remove it from its packaging base and during movement into its installation location. Manoeuvring the boiler may include the use of a sack truck and involve lifting, pushing and pulling.

Caution should be exercised during these operations.

Operatives should be knowledgeable in handling techniques when performing these tasks and the following precautions should be considered:

- Grip the boiler at the base.
- Be physically capable.
- Use PPE as appropriate, e.g. gloves, safety footwear.

During all manoeuvres and handling actions, every attempt should be made to ensure the following unless unavoidable and/or the weight is light.

- Keep back straight.
- Avoid twisting at the waist.
- Avoid upper body/top heavy bending.
- Always grip with the palm of the hand.
- Use designated hand holds.
- Keep load as close to the body as possible.
- Always use assistance if required.

OPTIONAL EXTRA KITS

- **Condensate Pump Kit**
- **Remote User Control Kit**
- **Siphon Kit**
- **Stand Off Kit**

Fluing Kits:

- **45° Elbow Kit** (maximum 2 elbows per installation)
- **90° Elbow Kit** (maximum 2 elbows per installation)
- **Flue Deflector Kit**
- **Flue Extension Ducts - D Pack** (1000mm long up to 3m)
- **Flue Finishing Kit**
- **High Level Flue Outlet Kit**
- **Roof Flue Kit** (to a maximum of 5m)
- **Twin Flue Kit**
- **Vertical Outlet Kit**

SAFETY

Current Gas Safety (Installation and Use) Regulations or rules in force.

The appliance is suitable only for installation in GB and IE and should be installed in accordance with the rules in force.

In GB, the installation must be carried out by a CORGI Registered Installer. It must be carried out in accordance with the relevant requirements of the:

- Gas Safety (Installation and Use) Regulations
- The appropriate Building Regulations either The Building Regulations, The Building Regulations (Scotland), Building Regulations (northern Ireland).
- The Water Fittings Regulations or Water byelaws in Scotland.
- The Current I.E.E. Wiring Regulations.

Where no specific instructions are given, reference should be made to the relevant British Standard Code of Practice.

In IE, the installation must be carried out by a Competent Person and installed in accordance with the current edition of I.S.813 "Domestic Gas Installations", the current Building Regulations and reference should be made to the current ETCI rules for electrical installation.

Detailed recommendations are contained in the following British Standard Codes of Practice:

BS. 5440:1	Flues (for gas appliances of rated input not exceeding 70 kW).
BS. 5440:2	Ventilation (for gas appliances of rated input not exceeding 70 kW).
BS. 5449	Forced circulation hot water systems.
BS. 5546	Installation of gas hot water supplies for domestic purposes (2nd Family Gases).
BS. 6798	Installation of gas fired hot water boilers of rated input not exceeding 60 kW.
BS. 6891	Low pressure installation pipes.

Health & Safety Document No. 635

The Electricity at Work Regulations, 1989.

The manufacturer's notes must NOT be taken, in any way, as overriding statutory obligations.

IMPORTANT. These appliances are CE certificated for safety and performance. It is, therefore, important that no external control devices, e.g. flue dampers, economisers etc., are directly connected to these appliances unless covered by these Installation and Servicing Instructions or as otherwise recommended by **Ideal Stelrad Group** in writing. If in doubt please enquire.

Any direct connection of a control device not approved by **Ideal Stelrad Group** may invalidate the certification and the normal appliance warranty. It could also infringe the Gas Safety Regulations and the above regulations.

SAFE HANDLING OF SUBSTANCES

Care should be taken when handling the boiler insulation panels, which can cause irritation to the skin. No asbestos, mercury or CFCs are included in any part of the boiler or its manufacture.

LOCATION OF BOILER

The boiler must be installed on a flat and vertical wall, capable of adequately supporting the weight of the boiler and any ancillary equipment.

The boiler may be fitted on a combustible wall and insulation between the wall and the boiler is not necessary, unless required by the local authority.

For electrical safety reasons there must be no access from the back of the boiler.

The boiler must not be fitted outside.

Timber Framed Buildings

If the boiler is to be fitted in a timber framed building it should be fitted in accordance with the Institute of Gas Engineering document IGE/UP/7:1998.

Bathroom Installations

This appliance is rated **IP20.**

The boiler may be installed in any room or internal space, although particular attention is drawn to the requirements of the current IEE (BS.7671) Wiring Regulations and, in Scotland, the electrical provisions of the building regulations applicable in Scotland, with respect to the installation of the boiler in a room or internal space containing a bath or shower. For Ireland reference should be made to the current ETCI rules for electrical installations and I.S.813:2002.

If the appliance is to be installed in a room containing a bath or shower then, providing water jets are not going to be used for cleaning purposes (as in communal baths/showers), the appliance can be installed in Zone 3, as detailed in BS.7671.

Compartment Installations

A compartment used to enclose the boiler should be designed and constructed specially for this purpose.
An existing cupboard or compartment may be used, provided that it is modified for the purpose.

In both cases details of essential features of cupboard / compartment design, including airing cupboard installation, are to conform to the following:

- BS. 6798. (No cupboard ventilation is required - see “Air Supply” for details).
- The position selected for installation MUST allow adequate space for servicing in front of the boiler.
- For the minimum clearances required for safety and subsequent service see the wall mounting template and Frame 2. In addition, sufficient space may be required to allow lifting access to the wall mounting plate.
- If the appliance is using a B_{23} twin flue pipe system then compartment ventilation is required. Refer to Installation Instructions for the 80/80 twin flue system.

Boiler House Installations

When installed in a separate boiler house and using the air inlet with the twin pipe flue system, ventilation must be in accordance with BS5440:2.

GAS SUPPLY

The local gas supplier should be consulted, at the installation planning stage, in order to establish the availability of an adequate supply of gas. An existing service pipe must NOT be used without prior consultation with the local gas supplier.
The boiler MUST be installed on a gas supply with a governed meter only.

A gas meter can only be connected by the local gas supplier or by a CORGI registered engineer. In IE by a Competent Person.

An existing meter should be checked, preferably by the gas supplier, to ensure that the meter is adequate to deal with the rate of gas supply required.

N.B. The principle of the 1:1 gas valve ensures that the **icos HE** range is able to deliver it’s full output at inlet pressures down to 14mb. However if dynamic pressures below 20mb are experienced ensure this is adequate for **ALL** other gas appliances in the property.

IMPORTANT.
Installation pipes MUST be fitted in accordance with BS. 6891. In IE refer to I.S.813:2002. Pipework from the meter to the boiler MUST be of an adequate size, i.e. no longer than 20m and not less than 15mm O.D.

The complete installation MUST be tested for gas soundness and purged as described in the above code.

FLUE INSTALLATION

Pluming will occur at the terminal so terminal positions which would cause a nuisance should be avoided.

The flue must be installed in accordance with the recommendations of BS.5440-1:2000. In IE refer to I.S.813:2002.

The following notes are intended for general guidance.

1. The boiler MUST be installed so that the terminal is exposed to external air.
2. It is important that the position of the terminal allows the free passage of air across it at all times.
3. Minimum acceptable spacing from the terminal to obstructions and ventilation openings are specified in Table 3.

Table 3 - Balanced Flue Terminal Position

Flue Terminal Positions	Min. Spacing*
1. Directly below or alongside an opening window, air vent or other ventilation opening.	300mm (12")
2. Below guttering, drain pipes or soil pipes. *BS5440-1 2000*	25mm (1")* *75mm (3")*
3. Below eaves. *BS5440-1 2000*	25mm (1")* *200mm (8")*
4. Below balconies or a car port roof. *BS5440-1 2000*	25mm (1")* *200mm (8")*
5. From vertical drain pipes or soil pipes. *BS5440-1 2000*	25mm (1")* *150mm (6")*
6. From an internal or external corner or to a boundary along side the terminal. *BS5440-1 2000*	25mm (1")* *300mm (12")*
7. Above adjacent ground, roof or balcony level.	300mm (12")
8. From a surface or a boundary facing the terminal.	600mm (24")
9. From a terminal facing a terminal.	1,200mm (48")
10. From an opening in a car port (e.g. door or window) into dwelling.	1,200mm (48")
11. Vertically from a terminal on the same wall.	1,500mm (60")
12. Horizontally from a terminal on the wall.	300mm (12")
Vertical Terminals	
13. Above the roof pitch with roof slope of all angles. Above flat roof.	300mm (12") 300mm (12")
14. From a single wall face - Flat Roof From a single wall face - Pitched Roof From corner walls.	600mm (24") 1000mm (40") 1000mm (40")
Twin Flue Applications	
15. Centre distance between air inlet and flue outlet ducts.	120mm (5")

** Only one reduction down to 25mm is allowable per installation otherwise BS5440-1 2000 dimensions must be followed.*

4. Where the lowest part of the terminal is fitted less than 2m (6'6") above a balcony, above ground or above a flat roof to which people have access, then the terminal MUST be protected by a purpose designed guard.

   Ensure that the guard is fitted centrally.

   Terminal guards are available from boiler suppliers. Ask for TFC Flue Guard Model No. K3 (round plastic-coated). In case of difficulty contact:

   Grasslin (UK) Ltd. Tel. +44(0) 01732 359 888
   Tower House, Vale Rise Fax. +44(0) 01732 354 445
   Tonbridge. Kent TN9 1TB www.tfc-group.com

5. The flue assembly shall be so placed or shielded as to prevent ignition or damage to any part of any building.

6. The air inlet/products outlet duct and the terminal of the boiler MUST NOT be closer than 25mm (1") to combustible material. Detailed recommendations on the protection of combustible material are given in BS.5440-1:2000. In IE refer to I.S.813:2002.

IMPORTANT.
It is absolutely ESSENTIAL to ensure, in practice, that products of combustion discharging from the terminal cannot re-enter the building or any other adjacent building through ventilators, windows, doors, other sources of natural air infiltration, or forced ventilation / air conditioning.

If this should occur the appliance MUST be turned OFF, labelled as 'unsafe' until corrective action can be taken.

TERMINAL

The terminal assembly can be adapted to accommodate various wall thicknesses. Refer to Frame 14.

AIR SUPPLY

It is NOT necessary to have a purpose-provided air vent in the room or internal space in which the boiler is installed. Neither is it necessary to ventilate a cupboard or compartment in which the boiler is installed, due to the low surface temperatures of the boiler casing during operation; therefore the requirements of BS 6798, Clause 12, and BS 5440:2 may be disregarded. In IE the requirements of I.S.813:2002 may be disregarded.

Only for boiler house installation must BS5440:2 be adhered to.

WATER CIRCULATION SYSTEM

IMPORTANT.
A minimum length of 1 metre of copper pipe MUST be fitted to both flow and return connections from the boiler before connection to any plastic piping.

For the types of system and correct piping procedure see Frames 1, and 3 to 8.

The central heating system should be in accordance with BS.6798 and, in addition, for smallbore and microbore systems, BS.5449.

WATER TREATMENT - see Frame 9

The hot water storage cylinder MUST be of the indirect type and should preferably be manufactured of copper.

Single feed, indirect cylinders are not recommended and MUST NOT be used on sealed systems.

The appliances are NOT suitable for gravity central heating nor are they suitable for the provision of gravity domestic hot water.

The hot water cylinder and ancillary pipework, not forming part of the useful heating surface, should be lagged to prevent heat loss and any possible freezing - particularly where pipes run through roof spaces and ventilated underfloor spaces.

The boiler must be vented.

The hydraulic resistance of the boilers, at MAXIMUM OUTPUT, with an 11 °C (20 °F) temperature differential, is shown in Graph 1.

Graph 1 - Water flow rate and pressure loss

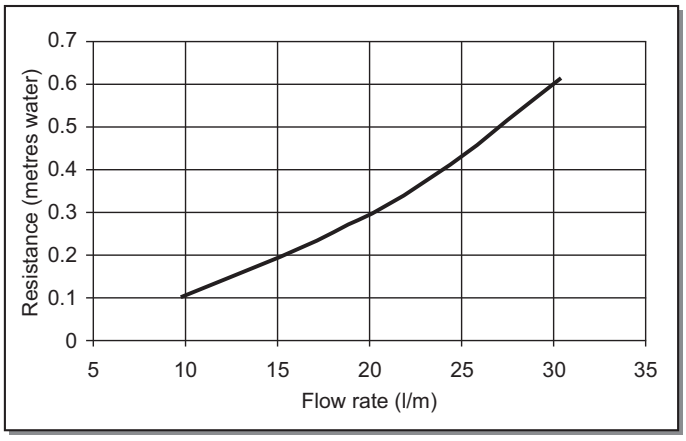

BOILER CONTROL INTERLOCKS

Ideal Stelrad Group recommend that heating systems utilising full thermostatic radiator valve control of temperature in individual rooms should also be fitted with a room thermostat controlling the temperature in a space served by radiators not fitted with such a valve as stated in BS. 5449.

Central heating systems controls should be installed to ensure the boiler is switched off when there is no demand for heating or hot water.

When thermostatic radiator valves are used, the space heating temperature control over a living / dining area or hallway having a heating requirement of at least 10% of the boiler heat output should be achieved using a room thermostat, whilst other rooms are individually controlled by thermostatic radiator valves. However, if the system employs thermostatic radiator valves on all radiators, or two port valves without end switches, then a bypass circuit must be fitted with an automatic bypass valve to ensure a flow of water should all valves be in the closed position.

ELECTRICAL SUPPLY

WARNING.
This appliance must be earthed.

Wiring external to the appliance MUST be in accordance with the current I.E.E. (BS.7671) Wiring Regulations and any local regulations which apply. For Ireland reference should be made to the current ETCI rules for electrical installations.

The point of connection to the mains should be readily accessible and adjacent to the boiler.

Note. The Fan voltage is 325V DC.

CONDENSATE DRAIN - Refer to Frames 23, 24, 25 & 49

A condensate drain is provided on the boiler. This drain must be connected to a drainage point. All pipework and fittings in the condensate drainage system MUST be made of plastic - *no other materials may be used.*

IMPORTANT.
Any external runs must be insulated.
The drain outlet on the boiler is standard 21.5mm (3/4") overflow pipe.

3 OPEN VENT SYSTEM REQUIREMENTS

The system should be vented directly off the boiler flow pipe, as close to the boiler as possible. The cold feed entry should be inverted and MUST be positioned between the pump and the vent, and not more than 150mm (6") away from the vent connection.

Note. *Combined feed and vent pipes may also be fitted.*

There should be a minimum height 450mm (18") of open vent above the cistern water level. If this is not possible refer to Frame 5. The vertical distance between the highest point of the system and the feed/expansion cistern water level MUST not be less than 450 mm (18"). The pump must be fitted on the flow side of the boiler.

A suitable pump is a domestic circulator capable of providing a maximum 11°C (20°F) temperature differential across the boiler with the whole of the heating circuit open (e.g. Grundfos UPS 15/50, 15/60 or equivalent). With the minimum flow circuit allowed by the controls the differential must not exceed 25 °C.

The vertical distance between the pump and feed/expansion cistern MUST comply with the pump manufacturer's minimum requirements, to avoid cavitation. Should these conditions not apply either lower the pump position or raise the cistern above the minimum requirement specified by **Ideal Stelrad Group.** The isolation valves should be fitted as close to the pump as possible.

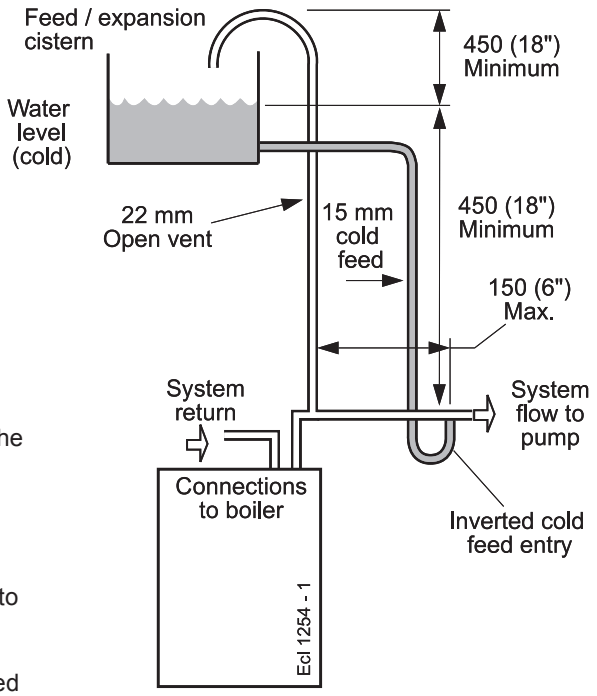

4 SCHEMATIC PIPEWORK AND SYSTEM BALANCING

The boiler does not normally need a bypass but at least some radiators on the heating circuit, of load at least 10% of the minimum boiler output in condensing mode, must be provided with twin lockshield valves so that this minimum heating load is always available (see footnote re. thermostatic radiator valves).

Balancing

1. Set the programmer to ON for both CH and HW. Turn the cylinder thermostat down. Close the manual or thermostatic valves on all radiators, leaving the twin lockshield valves (on the radiators referred to above) in the open position. Turn up the room thermostat and adjust these lockshield valves to give boiler flow and return temperatures not more than 20 °C apart. These valves should now be left as set.
2. Open all manual or thermostatic radiator valves and adjust the lockshield valves on remaining radiators to give around 11°C temperature drop at each radiator.
3. Turn up the cylinder thermostat and adjust the cylinder balancing valve so that the cylinder achieves a maximum flow consistent with adequate flow to the radiators. Check that with only the domestic hot water loop in circuit a differential temperature of 20 °C across the boiler is not exceeded.
4. Adjust room and cylinder thermostats and programmer to NORMAL settings.

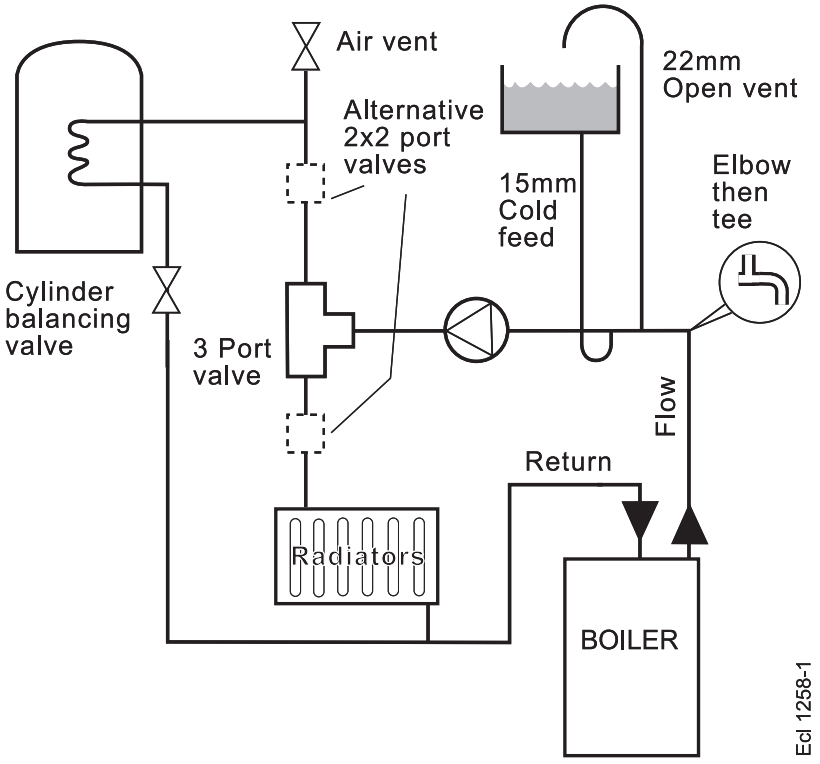

5 LOW HEAD AND LARGE SYSTEMS WITH EXTENSIVE PIPE RUNS - OPEN VENT

This arrangement is useful for large systems where radiators at the extremities are difficult to vent. This can lead to pumping over with conventional feed and vent arrangements.

The following conditions MUST be observed:

1. The top of the automatic air vent must be below the cold water level.
2. The static water level (cold) must be at least 200mm above the top of the horizontal flow pipe, fitted as shown. The vent connection MUST NOT be made immediately off the top of the boiler as venting is made less efficient.
3. The maximum practical length of 22mm cold feed pipe should be used in order to reduce the effective volume of hot system water expanding into the feed/expansion cistern to a minimum.

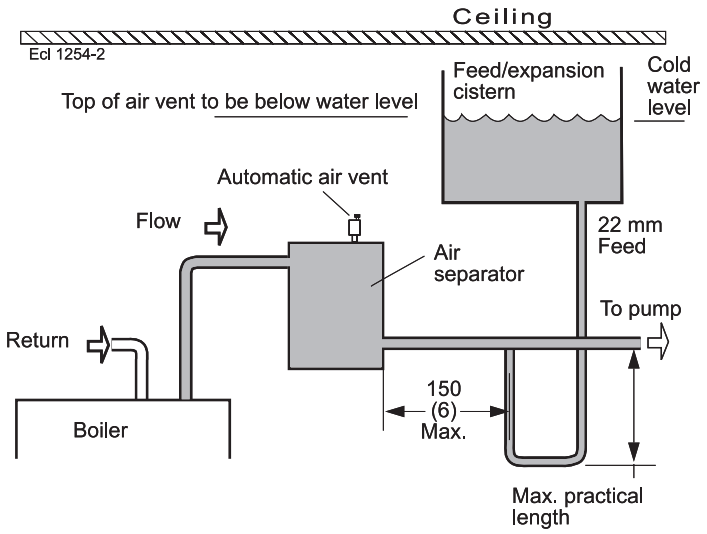

All dimensions in mm (in.).
NB. Imperial dimensions are approximate

Note. *The pump manufacturers' minimum requirements must be complied with.*

6 SEALED SYSTEM REQUIREMENTS

Notes.

a. The method of filling, refilling, topping up or flushing sealed primary hot water circuit from the mains via a temporary hose connection is only allowed if acceptable to the local water authority.

b. When installing the filling device, it must be connected as shown to fully comply with the water regulations. This may involve the fitting of an additional WRAS approval isolator valve to the mains supply.

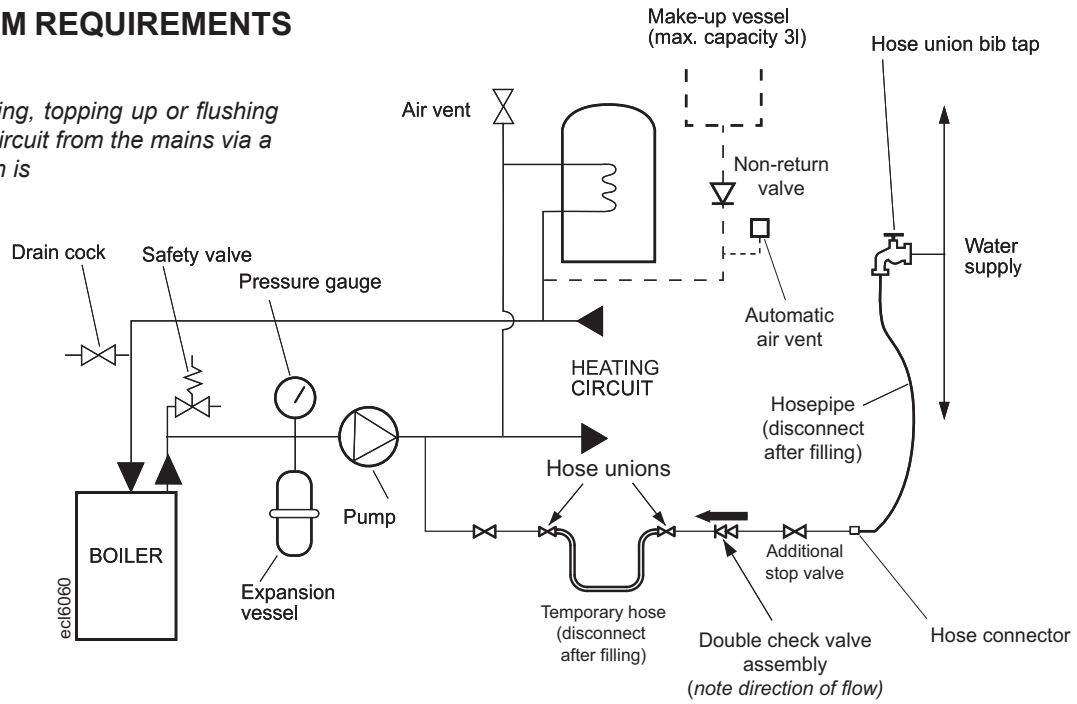

1. General

a. The installation must comply with the requirements of BS. 6798 and BS. 5449.

b. The installation should be designed to work with flow temperatures of up to 82 °C.

c. All components of the system, including the heat exchanger of the indirect cylinder, must be suitable for a working pressure of 3 bar (45lb/in^2) and temperature of 110°C. Care should be taken in making all connections so that the risk of leakage is minimised.

2. Safety Valve

A spring loaded safety valve complying with the relevant requirements of BS. 6759 must be fitted in the flow pipe as close to the boiler as possible and with no intervening valve or restriction. The valve should have the following features:

a. A non-adjustable preset lift pressure not exceeding 3bar (45lb/in^2).

b. A manual testing device.

c. Provision for connection of a discharge pipe. *The valve or discharge pipe should be positioned so that the discharge of water or steam cannot create a hazard to the occupants of the premises or cause damage to electrical components and wiring.*

3. Pressure Gauge

A pressure gauge covering at least the range 0-4 bar (0-60 lb/in^2) must be fitted to the system. The gauge should be easily seen from the filling point and should preferably be connected at the same point as the expansion vessel.

7 SEALED SYSTEM REQUIREMENTS - continued

4. Expansion Vessel

a. A diaphragm type expansion vessel must be connected to a point close to the inlet side of the pump, the connecting pipe being not less than 15 mm (1/2" nominal) size and not incorporating valves of any sort.

b. The vessel capacity must be adequate to accept the expansion of the system water when heated to 110°C (230°F).

c. The charge pressure must not be less than the static water head above the vessel. The pressure attained in the system when heated to 110° C (230° F) should be at least 0.35 bar (5 lb/in²) less than the lift pressure of the safety valve.
For guidance on vessel sizing refer to the table in Frame 8.

For further details refer to BS. 5449, BS. 7074:1 and the British Gas Corporation publication 'Material and Installation Specifications for Domestic Central Heating and Hot Water'. For IE refer to the current edition of I.S.813.

5. Cylinder

The cylinder must be either of the indirect coil type or a direct cylinder fitted with an immersion calorifier which is suitable for operating on a gauge pressure of 0.35 bar (5 lb/in²) in excess of the safety valve setting. Single feed indirect cylinders are not suitable for sealed systems.

6. Make-up Water

Provision must be made for replacing water loss from the system, either:

a. From a manually filled make-up vessel with a readily visible water level. The vessel should be mounted at least 150 mm (6") above the highest point of the system, and be connected through a non-return valve to the system, fitted at least 300 mm (12") below the make-up vessel on the return side of the domestic hot water cylinder or radiators.

or

b. Where access to a make-up vessel would be difficult by pre-pressurisation of the system. Refer to 'Filling', below.

7. Mains Connection

There must be no direct connection to the mains water supply or to the water storage tank supplying domestic water, even through a non-return valve, without the approval of the local water authority.

8. Filling

The system may be filled by one of the following methods:

a. Through a cistern, used for no other purposes, via a ball valve permanently connected directly to a service pipe and/or a cold water distributing pipe.
The static head available from the cistern should be adequate to provide the desired initial system design pressure. The cold feed pipe from the cistern should include a non-return valve and a stop valve with an automatic air vent connected between them, the stop valve being located between the system and the automatic air vent. The stop valve may remain open during normal operation of the system if automatic water make-up is required.

b. Through a self-contained unit comprising a cistern, pressure booster pump (if required) and, if necessary, an automatic pressure reducing valve and flow restrictor. The cistern should be supplied through a temporary connection from a service pipe or cold water distributing pipe.
This unit may remain permanently connected to the heating system to provide limited automatic water make-up. Where the temporary connection is supplied from a service pipe or distributing pipe which also supplies other draw-off points at a lower level then a double check valve shall be installed upstream of the draw-off point.

c. Through a temporary hose connection from a draw-off tap supplied from a service pipe under mains pressure. Where the mains pressure is excessive a pressure reducing valve shall be used to facilitate filling.

The following fittings shall form a permanent part of the system and shall be fitted in the order stated:

A stop valve complying with the requirements of BS. 1010, Part 2 (the hose from the draw-off tap shall be connected to this fitting).
A test cock.
A double check valve of an approved type.

- Thoroughly flush out the whole of the system with cold water, without the pump in position.
- With the pump fitted, fill and vent the system until the pressure gauge registers 1.5 bar (21.5lb/in²). Examine for leaks.
- Check the operation of the safety valve by manually raising the water pressure until the valve lifts. This should occur within ± 0.3 bar (± 4.3lb/in²) of the preset lift pressure.
- Release water from the system until the initial system design pressure is reached.
- Light the boiler and heat the system to the maximum working temperature. Examine for leaks.
- Turn off the boiler and drain the system while still hot.
- Refill and vent the system.
- Adjust the initial pressure to the required value.

Sizing procedure for expansion vessels: The volume of the expansion vessel (litres) fitted to a sealed system shall not be less than that given by the table on the following page, multiplied by a factor of 0.8 (for flow temperatures of less than 83° C).

8 SEALED SYSTEM REQUIREMENTS - continued

Safety valve setting	3.0 bar			2.5 bar			2.0 bar	
Vessel charge and initial system pressure	0.5 bar	1.0 bar	1.5 bar	0.5 bar	1.0 bar	1.5 bar	0.5 bar	1.0 bar
Total water content of system litres	Expansion vessel volume litres							
25	2.1	2.7	3.9	2.3	3.3	5.9	2.8	5.0
50	4.2	5.4	7.8	4.7	6.7	11.8	5.6	10.0
75	6.3	8.2	11.7	7.0	10.0	17.7	8.4	15.0
100	8.3	10.9	15.6	9.4	13.4	23.7	11.3	20.0
125	10.4	13.6	19.5	11.7	16.7	29.6	14.1	25.0
150	12.5	16.3	23.4	14.1	20.1	35.5	16.9	30.0
175	14.6	19.1	27.3	16.4	23.4	41.4	19.7	35.0
200	16.7	21.8	31.2	18.8	26.8	47.4	22.6	40.0
225	18.7	24.5	35.1	21.1	30.1	53.3	25.4	45.0
250	20.8	27.2	39.0	23.5	33.5	59.2	28.2	50.0
275	22.9	30.0	42.9	25.8	36.8	65.1	31.0	55.0
300	25.0	32.7	46.8	28.2	40.2	71.1	33.9	60.0
Multiplying factors for other system volumes	0.0833	0.109	0.156	0.094	0.134	0.237	0.113	0.20

9 WATER TREATMENT

The icos boiler range have an ALUMINIUM alloy heat exchanger

IMPORTANT. The application of any other treatment to this product may render the guarantee of Ideal Stelrad Group invalid.

Ideal Stelrad Group recommend water treatment in accordance with the *Benchmark* Guidance Notes on Water Treatment in Central Heating systems.

Ideal Stelrad Group recommend the use of FERNOX-COPAL or MB1,GE Betz Sentinel X100 OR Salamander Corrosion Guard inhibitors and associated water treatment, which must be used in accordance with the manufacturers' instructions. For further information contact:

Fernox Manufacturing Co. Ltd
Cookson Electronics
Forsyth Road
Sheerwater
Woking
Surrey
GU21 5RZ
Tel: +44 (0) 1799 521133

Sentinel Performance Solutions
The Heath Business & Technical Park
Runcorn
Cheshire
WA7 4QX
Tel: 0800 389 4670
www.sentinel-solutions.net

Salamander Engineering Ltd
Unit 24
Reddicap Trading Estate
Sutton Coldfield
West Midlands
B75 7BU
Tel: +44 (0) 121 3780952

Notes

1. *It is most important that the correct concentration of the water treatment product is maintained in accordance with the manufacturers' instructions.*
2. *If the boiler is installed in an existing system any unsuitable additives MUST be removed by thorough cleansing.*

   BS. 7593:1992 details the steps necessary to clean a domestic central heating system.
3. *In hard water areas, treatment to prevent lime scale may be necessary - however, the use of artificially softened water is NOT permitted.*
4. *Under no circumstances should the boiler be fired before the system has been thoroughly flushed.*

10 BOILER ASSEMBLY - Exploded view

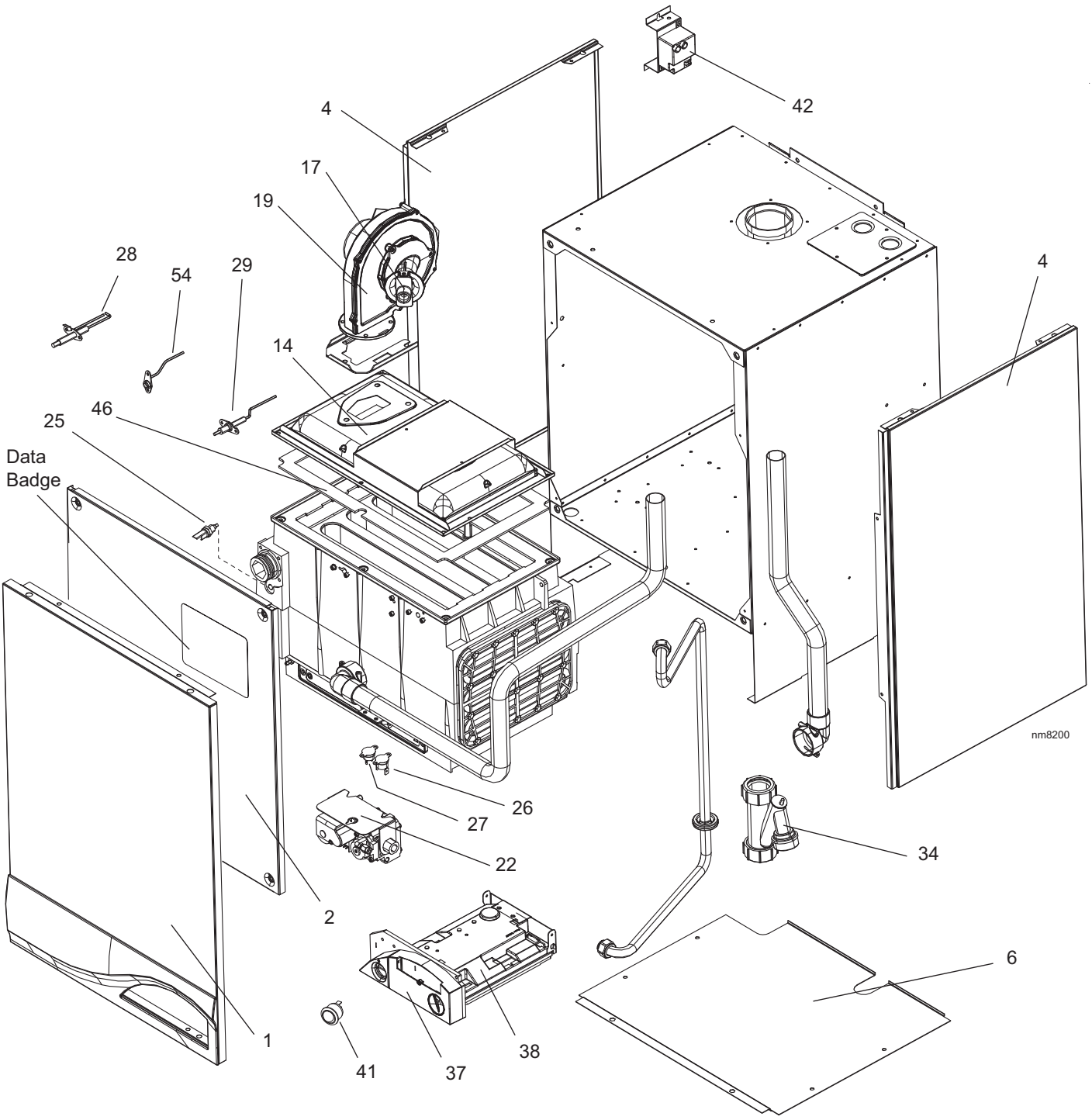

LEGEND

1 Front panel
2 Front sealing panel
4 Side panel RH/LH
6 Bottom panel
14 Burner assembly
17 Injector & housing
19 Fan assembly
22 Gas valve assembly
25 Dry Fire Thermostat
26 Control Thermistor
27 Overheat Thermostat
28 Ignition electrode
29 Flame detection electrode
34 Condensate 'S' trap
37 User Control
38 PCB primary control
41 Main switch c/w harness
42 Spark generator
46 Burner gasket
54 Burner earth pin (ionisation probe)

11 UNPACKING

The boiler is supplied fully assembled in one Pack A, together with a standard flue assembly for lengths up to 650mm, rear or side flue outlet, in Pack B.

Unpack and check the contents.

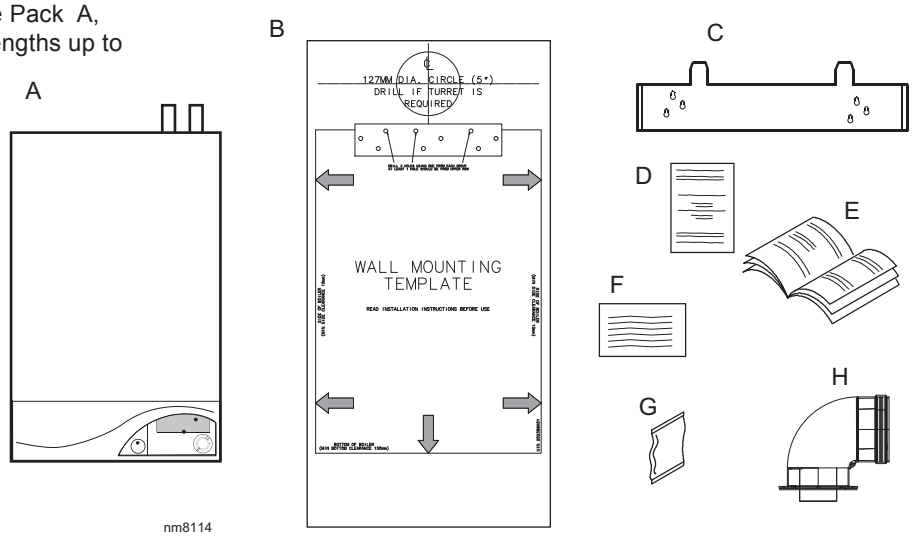

Pack A Contents

A The boiler
B Wall mounting template
C Wall mounting plate
D 1 year guarantee form
E These Installation & Servicing/ User's Instructions
F Water Treatment Warning Label
G Hardware pack
H Flue Turret

Hardware Pack

A 50mm x No.14 wood screws - 3 off
B Wall plugs (TP2B) - 3 off
C Mains connector - 1 off
D Lubricant - 1 off
E Turret Sealing Gasket - 1 off
F Turret Fixing Screws - 4 off
G Condensate Tube - 1 off
H No. 8 x 10 boiler fixing screw - 1 off

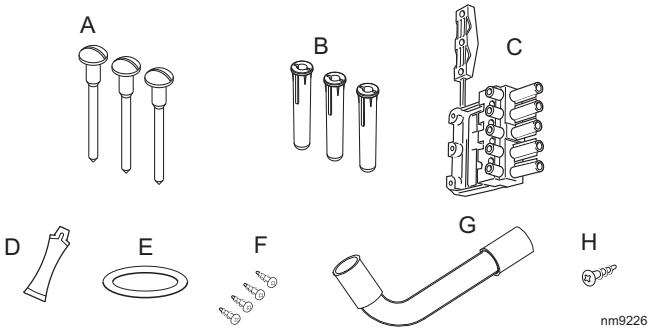

Pack B Contents

Flue terminal

12 PACKAGING REMOVAL

1. Ensure the boiler is stood correctly, as marked on the carton.
2. Cut and remove the strapping.
3. Fold back the top flaps to gain access to the wall mounting plate, literature and wall mounting template.
4. Remove the instructions and read thoroughly before unpacking the product.
5. Remove the hardware pack and keep in a safe place.
6. When ready for installation lift off the outer sleeve.
7. Remove the top protection packing.
8. Remove the two packaging ends.

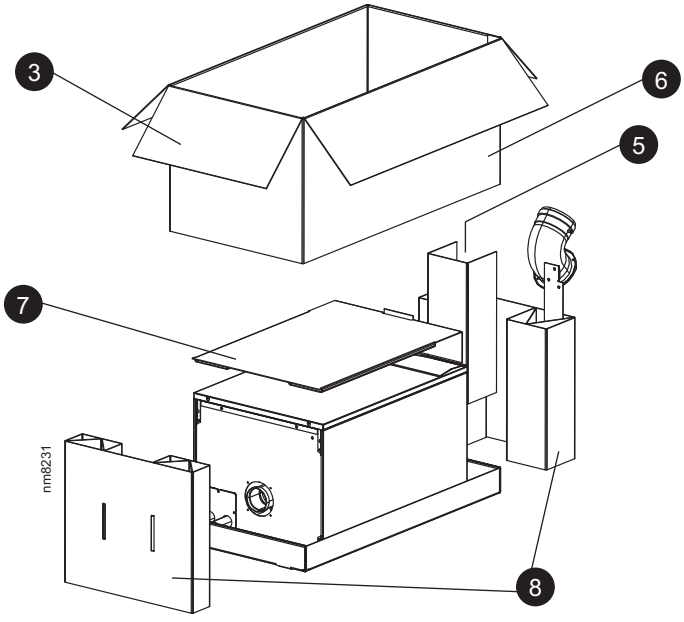

13 FRONT AND BOTTOM PANEL REMOVAL

1. To remove the front panel remove the 4 screws from the bottom panel.
2. Lift the panel up and off the top pegs.
3. To remove the bottom panel remove the 4 screws and withdraw.

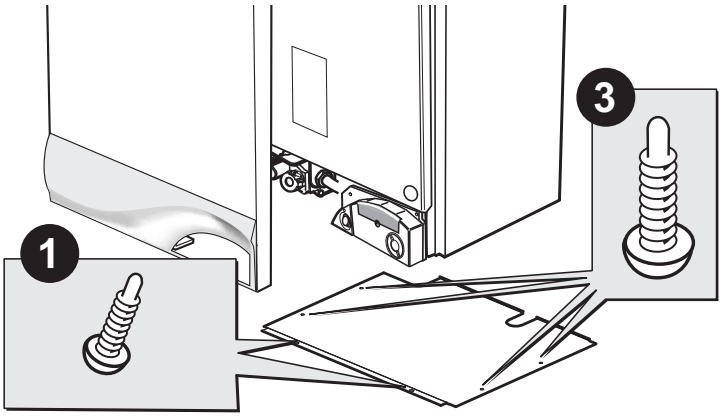

14 DETERMINING THE FLUE LENGTH AND FLUE PACKS REQUIRED

IMPORTANT. The boiler MUST be installed in a vertical position

Dimension X - Wall thickness.

Dimension L - Wall thickness plus boiler spacing.

FLUE KITS

Pack B - supplied as standard
For additional fluing options refer to **OPTIONAL EXTRA KITS** on page 7.

MAXIMUM FLUE LENGTHS:

HORIZONTAL FLUE - 3M
ROOF FLUE KIT - 5M
90° ELBOW KIT 60/100 (EQUIVALENT FLUE LENGTH RESISTANCE = 1.5M)
45° ELBOW KIT 60/100 (EQUIVALENT FLUE LENGTH RESISTANCE = 1.0M)

MINIMUM FLUE LENGTH:

FOR REAR OUTLET AND SINGLE BRICK WALL - 251MM

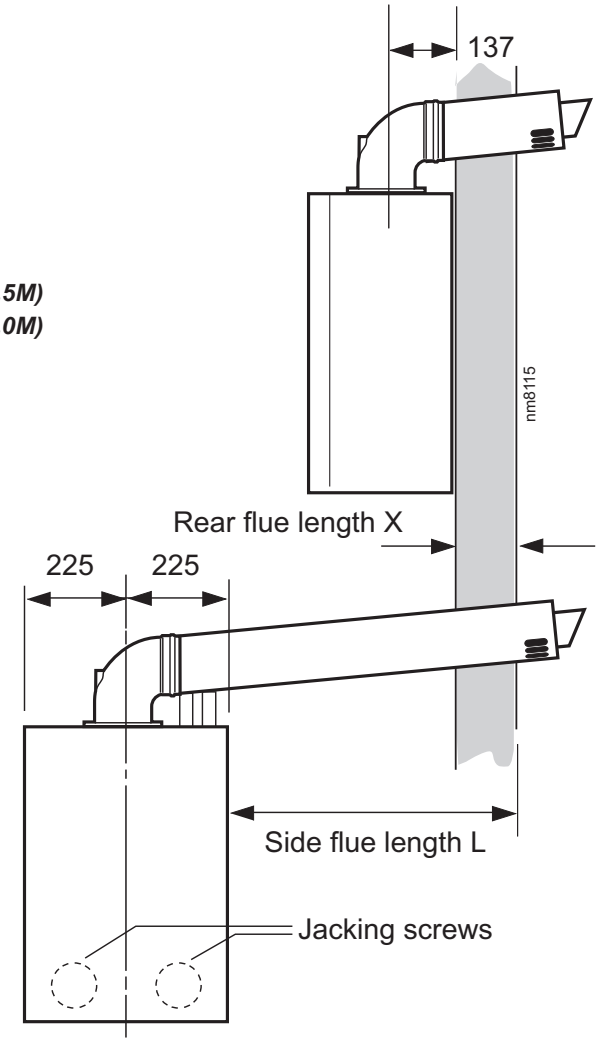

Total Flue length dimension		Flue
Rear flue dim. X+137	Side flue dim. L+225	Extra packs required
Up to 775 mm	Up to 775 mm	none
Up to 1680 mm	Up to 1680 mm	Pack D - 1 off
Up to 2585 mm	Up to 2585 mm	Pack D - 2 off
Up to 3000 mm	Up to 3000 mm	Pack D - 3 off

Notes.

1. *The flue duct MUST be inclined at 1.5 degrees to the horizontal to allow condensate to drain back into the boiler and out through the condensate drain. (Only necessary if using one or more 'D' extension duct packs).*
2. *If the boiler is to be installed with downward piping routed behind the boiler then the optional stand-off kit should be used. Care must be taken when cutting the ducts and marking the wall to suit this condition.*

15 FLUE ASSEMBLY - Exploded View

An optional flue duct extension kit is required for wall thicknesses greater than :

Side 535mm (21")

Rear 638mm(25 1/8").

LEGEND

1. Duct assembly.
2. Flue turret.
3. Turret gasket.

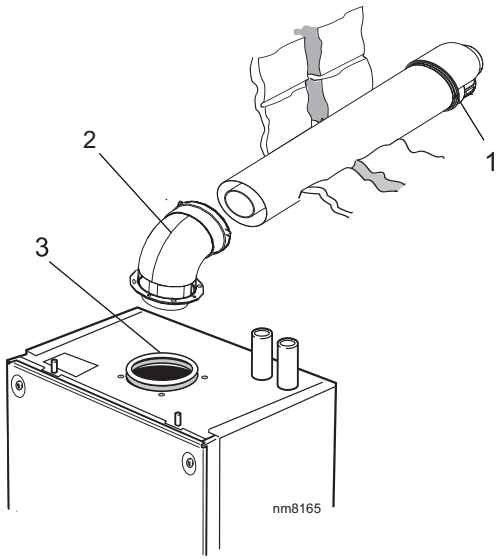

Rear flue arrangement shown

16 WALL MOUNTING TEMPLATE

Note.

The template shows the positions of the fixing holes and the flue hole centres for standard installation. If using stand off kit option, refer to instructions in kit. Care MUST be taken to ensure the correct holes are drilled.

1. Tape template into the selected position.
2. Ensure squareness by hanging a plumbline as shown. If fitting a side flue extend the flue centre line onto the side wall as shown.
3. Mark onto the wall the following:
   - **a** The 3 wall mounting plate screw positions (see instructions on wall mounting template).
   - **b.** The position of the flue duct hole (see diagram below, and template).

   Note. *Mark the centre of the hole as well as the circumference*
4. Remove the template from the wall.

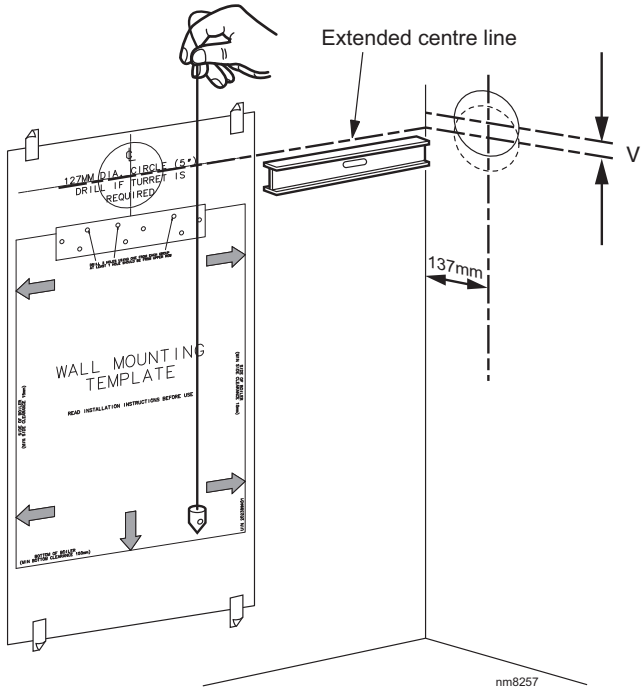

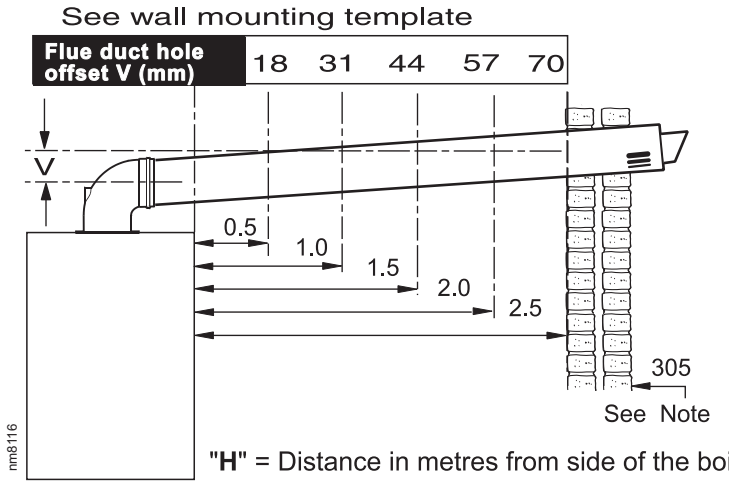

"**H**" = Distance in metres from side of the boiler to the side wall

Note. *If wall thickness is greater than 305mm then dimension "**H**" must be reduced by the same amount and the offset may be adjusted accordingly.*

17 PREPARING THE WALL

IMPORTANT. Ensure that, during the cutting operation, masonry falling outside of the building does not cause damage or personal injury.

1. Cut the flue hole (preferably with a 5" core boring tool), ensuring that the hole is square to the wall.
   Both wall faces immediately around the cut hole should be flat.
2. Drill 3 holes with a 7mm (1/4") masonry drill and insert the plastic plugs provided, for the wall mounting plate.

Note.
If using Stand Off kit option, refer to instructions in kit.

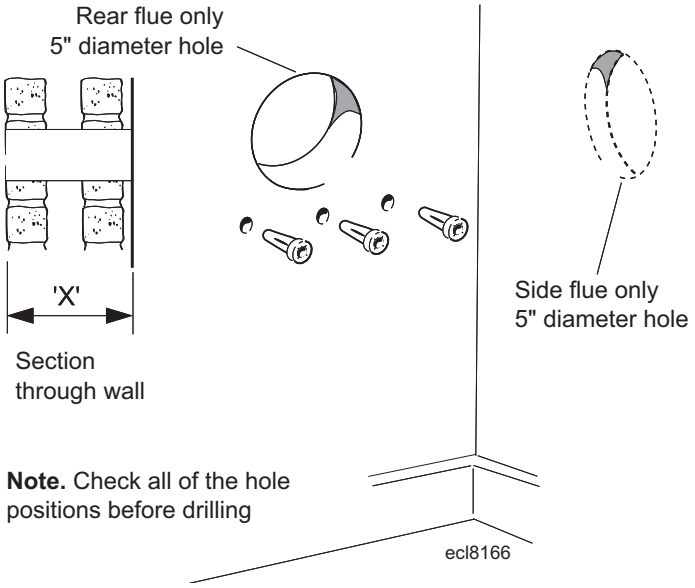

Note. Check all of the hole positions before drilling

18 CUTTING THE FLUE - REAR **Wall thicknesses of 114mm to 638mm**

Notes.

a. *If using the extension ducts go to Frame 20.*

b. *If the stand-off frame is used it is essential to add 33mm to dimension X.*

1. Measure and note wall thickness X. Refer to Frame 14.
2. Add 67mm (2 5/8") to dimension X and, measuring from the ring, cut the outer tube only.
3. To ensure the tube is cut square, mark the flue all the way around.
4. Cut the inner tube to a length 20mm (3/4") longer to aid engagement.

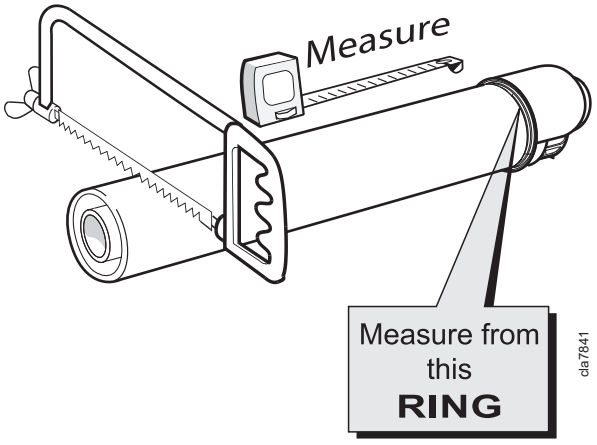

19 CUTTING THE FLUE - SIDE **Wall thicknesses of 114mm to 535mm**

Note. *If using the extension ducts go to Frame 20.*

1. Measure and note side flue length L. Refer to Frame 14.
2. Add 155mm (6 1/8") to dimension L and, measuring from the ring, cut the outer tube only.
3. To ensure the tube is cut square, mark the flue all the way around.
4. Cut the inner tube to a length 20mm (3/4") longer to aid engagement.

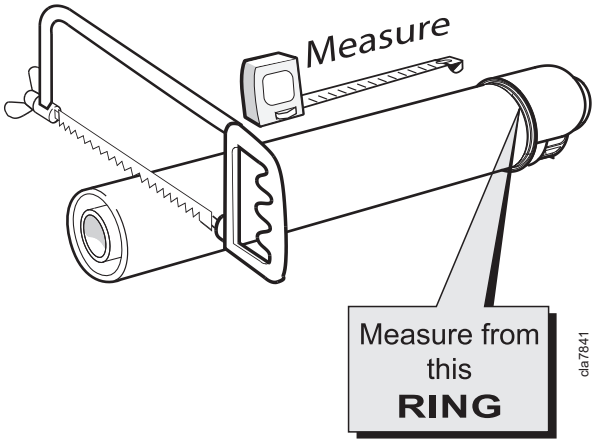

20 FLUE EXTENSION DUCTS - For flue lengths greater than 775mm

Pack D Flue extension duct kit contents.

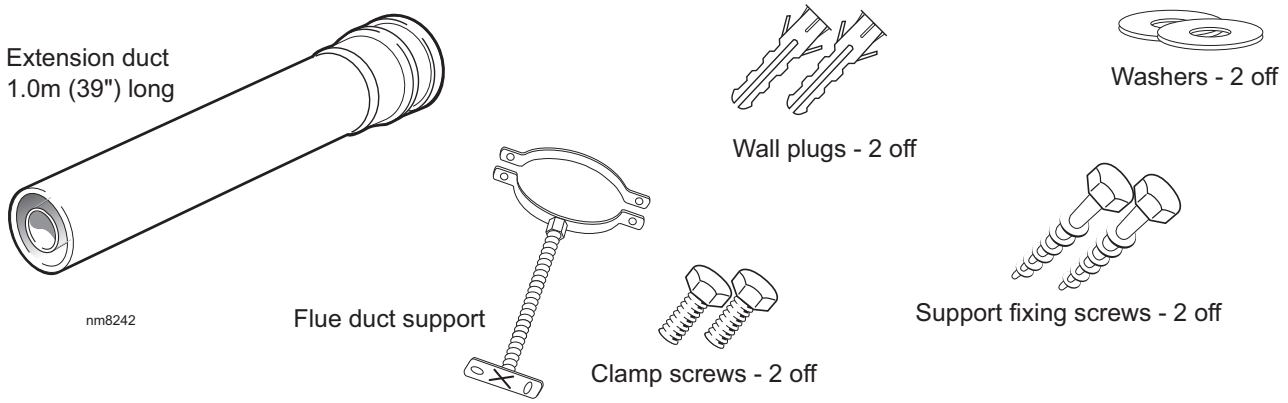

21 FLUE EXTENSION DUCTS - continued

Use a maximum of 3m extended flue ONLY

General arrangement

1. A ***maximum*** of 3 extension ducts (one suitably cut) plus the standard flue duct may be used together.
2. Flue extensions of greater length than 1m (39") should be supported with the bracket provided, suitably adjusted.

Note. *Side flue shown*

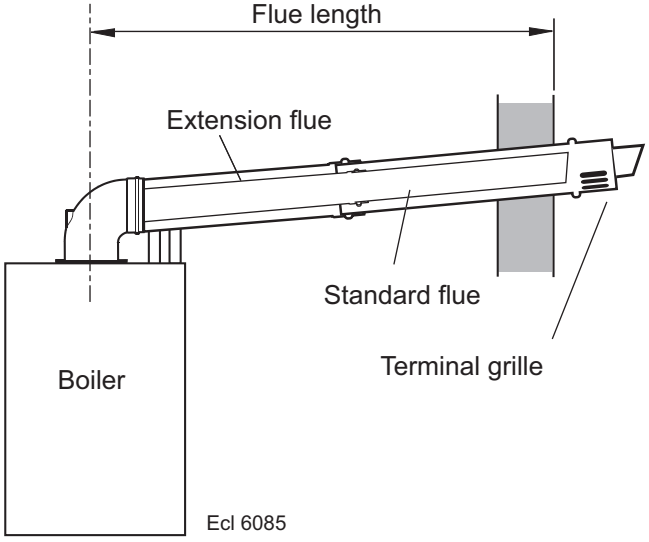

22 FITTING THE KIT

1. Fit the inner flue extension duct onto the inner flue duct.
2. Fit the outer flue extension duct onto the outer air duct.
3. Using the clamp provided, clamp the flue lengths together.
4. Repeat steps 1-4 if a second flue extension is required.
5. Measure and mark the flue length required onto the flue, measuring from the ring near the terminal.
6. To ensure a square cut, mark the flue all the way around.
7. Cut to length, and deburr the metal edges.

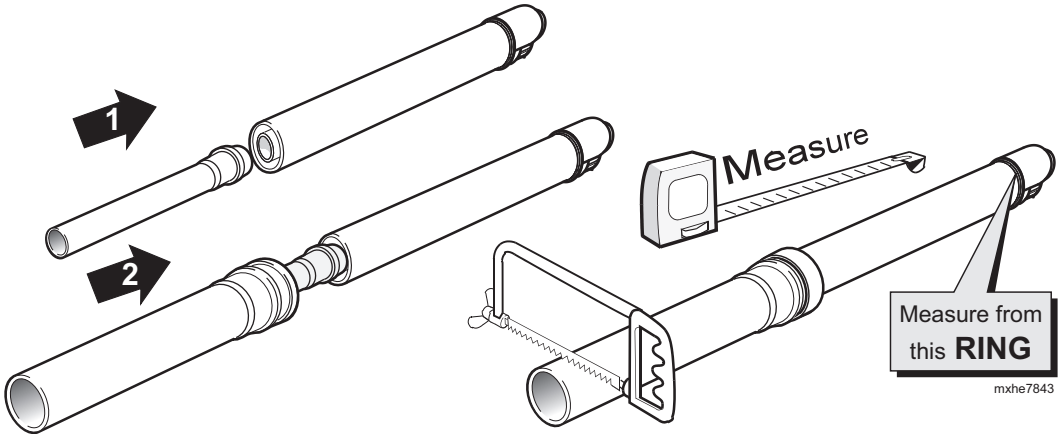

23 CONDENSATE DRAIN

Refer also to the British Gas document: 'Guidance Notes for the Installation of Domestic Gas Condensing Boilers' (1989).

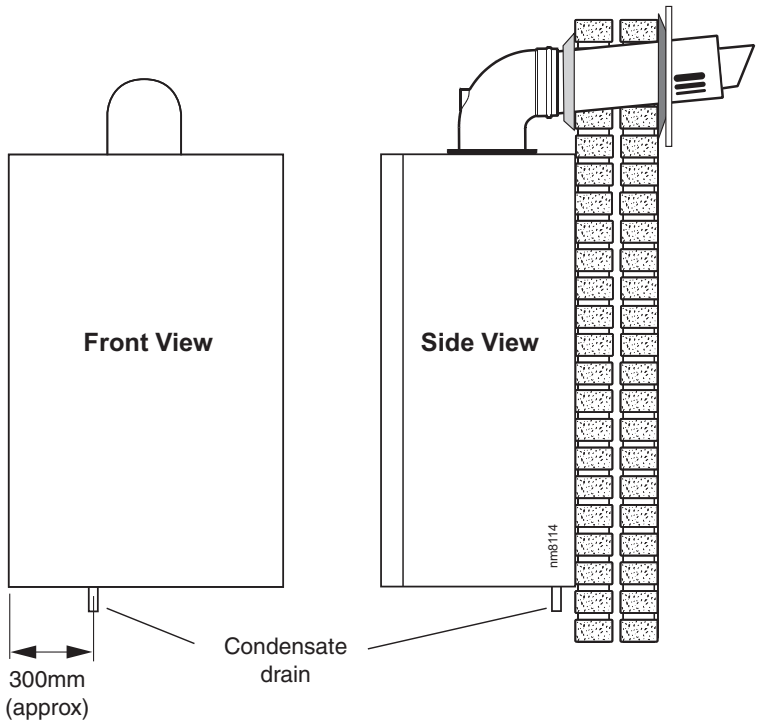

The condensate drain provided on the boiler must be connected to a drainage point, preferably within the building.

The routing of the drain must be made to allow a minimum fall of 1 in 20 away from the boiler, throughout its length.

The drainage pipework must be arranged so that obstruction (e.g. through freezing) of external drainage pipe does not give rise to spillage within the dwelling.

IMPORTANT. If excessive external pipework cannot be avoided an additional siphon kit and insulation are recommended, in order to prevent possible freezing.

All pipework and fittings in the condensate drain system must be made of plastic. No other materials may be used.

The drain outlet on the boiler is standard 21.5mm overflow pipe. This size must not be reduced in any part of its length.

A plastic cap is fitted to the end of the condensate drain adapter this must be removed before connection is made.

24 CONDENSATE PIPE TERMINATION CONFIGURATIONS

Note. ALL EXTERNAL PIPE RUNS MUST BE INSULATED OR UPSIZED TO 32MM - MAXIMUM LENGTH 3M EXTERIOR

1. INTERNAL TO SINK WASTE UPSTREAM OF SINK WASTE TRAP

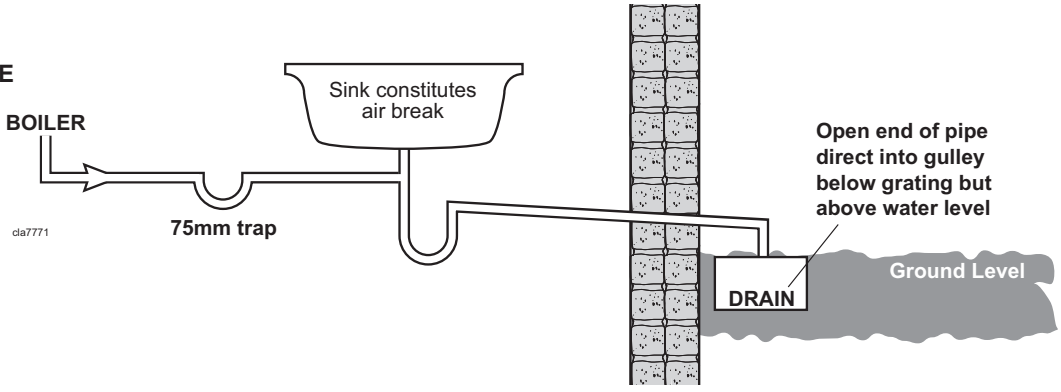

2. INTERNAL TO SINK WASTE DOWNSTREAM OF SINK WASTE TRAP (PREFERRED METHOD)

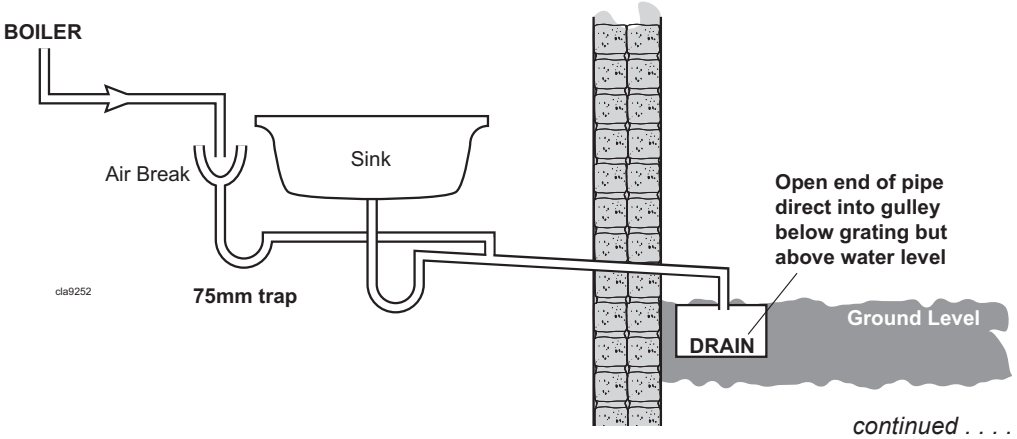

continued . . . .

25 CONDENSATE PIPE TERMINATION CONFIGURATIONS . . . *continued*

3. INTERNAL CONNECTION TO SOIL AND VENT STACK

Termination into a down pipe can take place providing it can be confirmed that the down pipe is part of a combined waste and rain water system.

* Make connection to SVP using a solvent welded saddle.

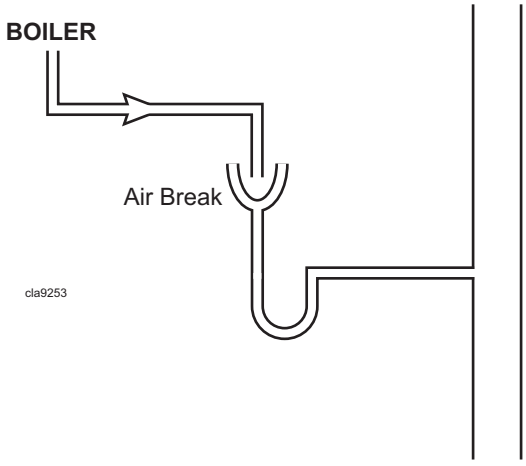

4. TERMINATION TO SOAK AWAY

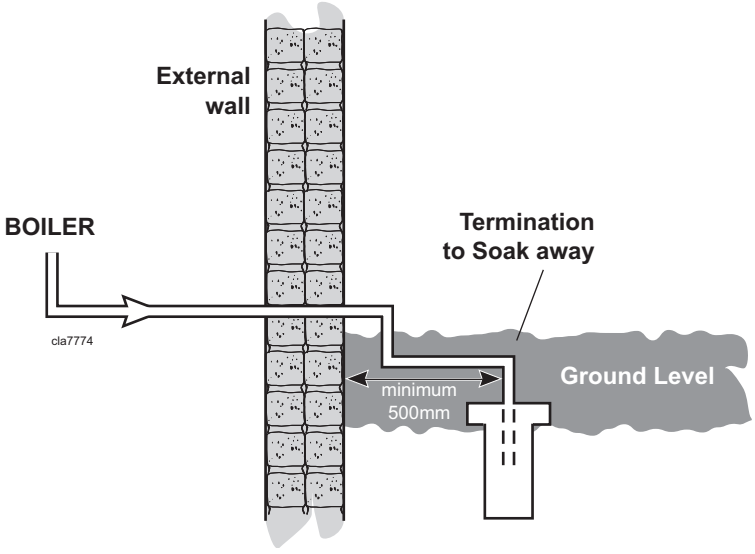

5. TERMINATION TO DRAIN / GULLEY

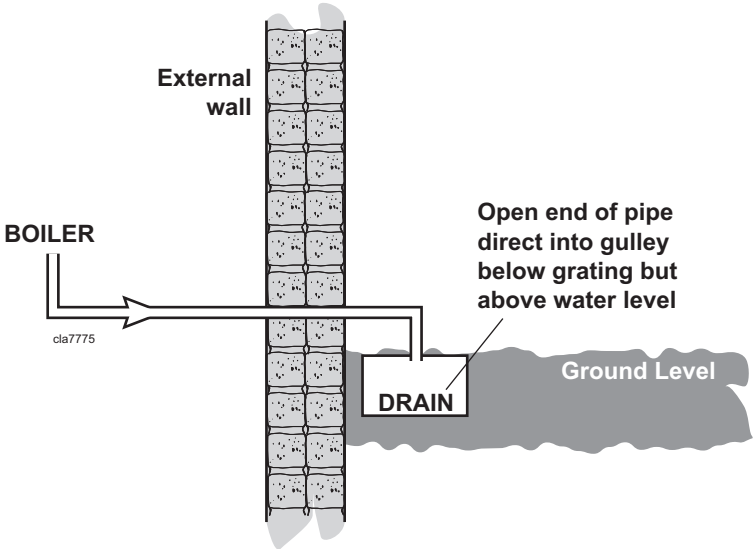

26 MOUNTING THE BOILER

Note. *Refer to Safe Handling (Page 7).*

1. Lift the boiler onto the wall mounting plate, as shown.
2. Check the boiler alignment using a spirit level and adjust as necessary with the jacking screw.
3. Fix boiler to wall mounting plate using self tapping screw (supplied in hardware pack).
4. Connect condensate hose to the S-trap. Ensure correct end is used.

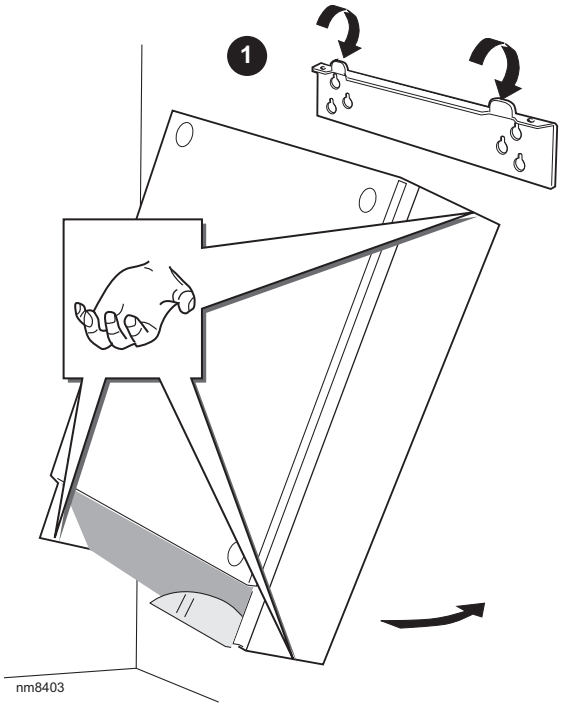

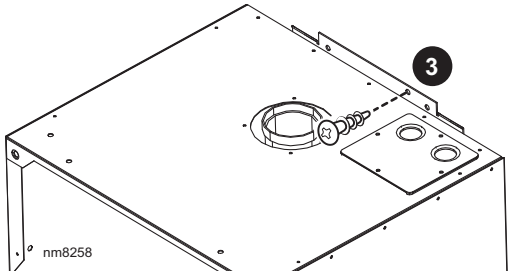

27 CONNECTING THE FLUE TO THE BOILER

1. Fit the turret seal (supplied in the hardware pack) to turret, locate the flue into the turret and push to ensure full engagement. Use lubricant from hardware pack to lubricate seals when engaging.
2. **CHECK THAT THE FLUE SEAL LOCATED IN THE TOP OF THE FLUE MANIFOLD IS SECURE AND GIVING AN EFFECTIVE SEAL.**
3. Secure the flue turret on top of the boiler with the 4 screws provided.
5. **Flues over 1 metre long.**

   Fix the flue support bracket to the wall, using the wall plug and screws.

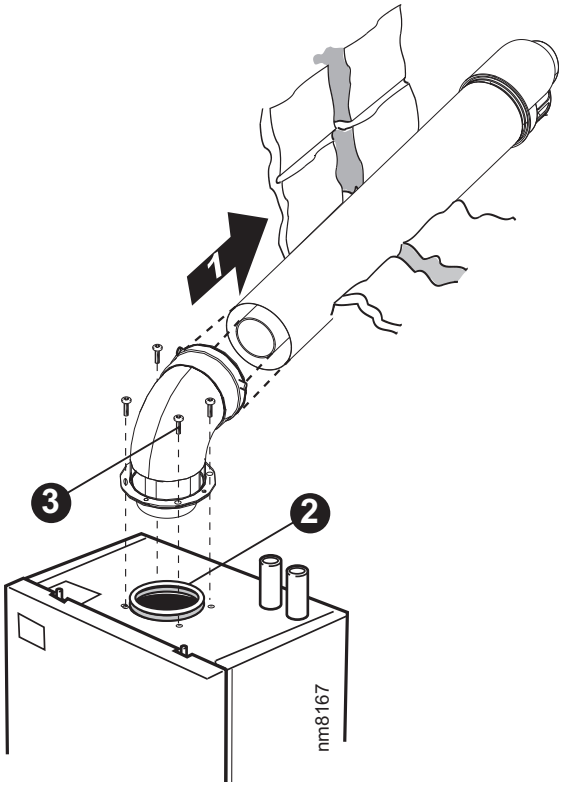

28 FITTING THE OPTIONAL ROOF FLUE KIT (Flat or Pitched)

Note.
A flat or pitched roof flashing plate (not supplied) is required before proceeding with the installation of this kit.

This kit is suitable for both flat and pitched roof terminations, using a concentric flue to run vertically from the top of the boiler and terminating above roof level.

Connection to the top of the boiler is made using a separately supplied vertical connector

WEATHER PROOFING

Where the flue passes through the roof line an adequate seal must be made. This is achieved by using either:

Flat roof weather collar or Universal weather collar.

ACCESSORIES

Flue Duct Extension Kits are available for flue lengths extending beyond 1m. These packs contain 1m extension ducts and may be cut to the desired length.

If the offset vertical option is used an elbow Kit is required. For a full accessories list refer to page 7, Optional Extras.

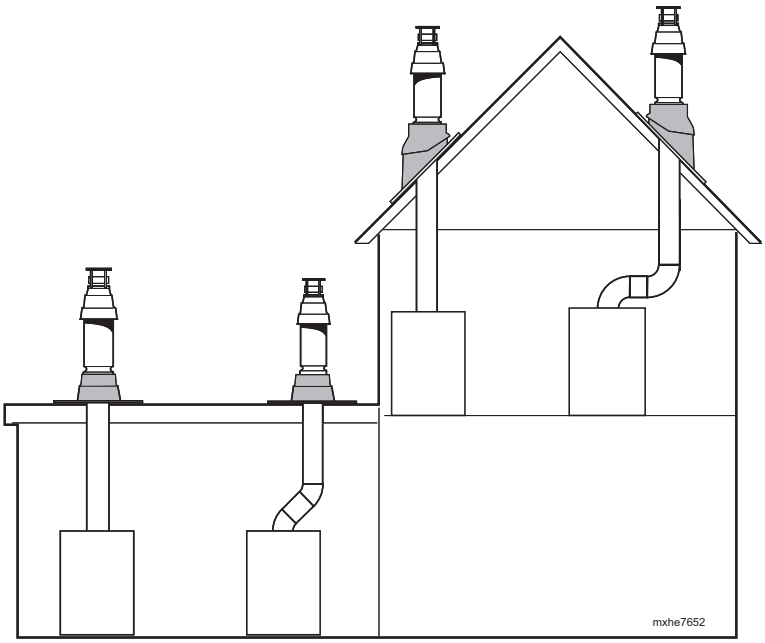

29 ROOF FLUE KIT CONTENTS / OPTIONS

NOTE. ***ITEMS D, E, F, G AND H ARE NOT SUPPLIED WITH THE ROOF FLUE KIT.***

- **A.** Flue assembly with terminal
- **B.** Flue seal collar
- **C.** 3.5x13 screw
- **D.** Pitched roof tile/flat roof tile weather collar
- **E.** Vertical connector (60/100) comes with gasket and fixing screws
- **F.** Roof flue extension duct kit (60/100)
- **G.** 90° elbow kit (60/100)
- **H.** 45° elbow kit (60/100)

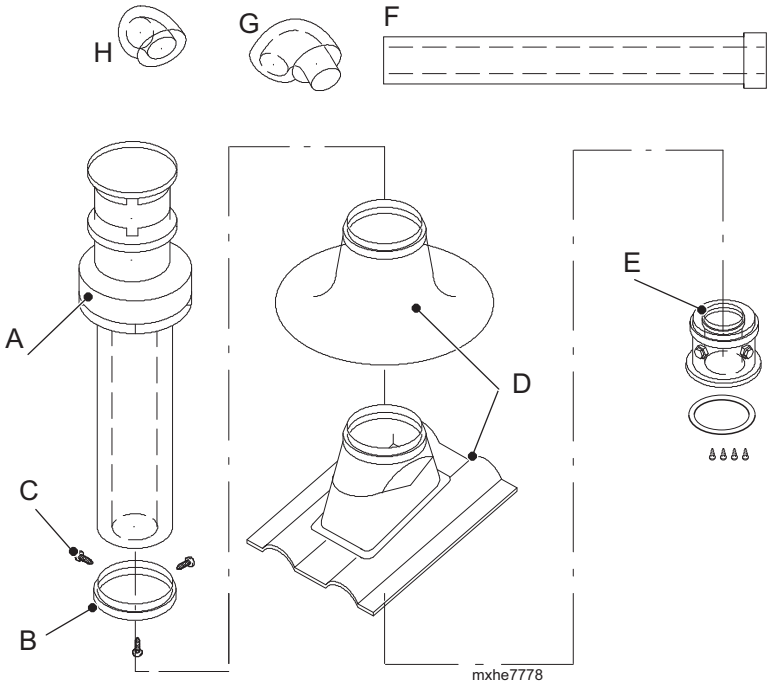

FLUE OUTLET

30 FLUE TERMINAL POSITION

The terminal should be positioned so that products of combustion can safely disperse at all times.

Pluming may occur at the termination so, where possible, terminal positions where this could cause a nuisance should be avoided.

Minimum dimensions are shown below

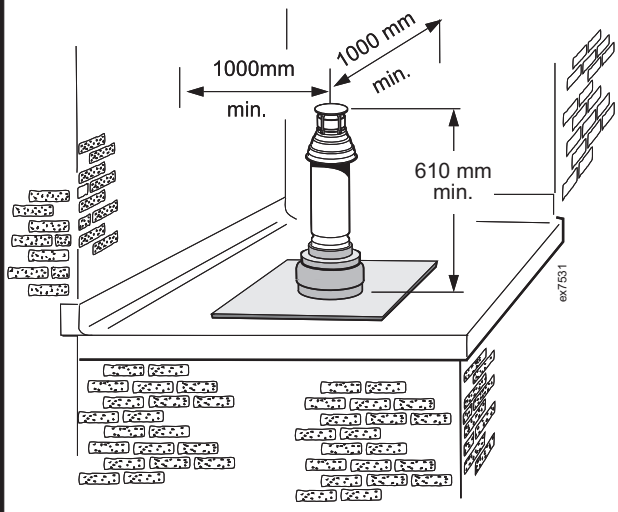

Flat roof - with structure

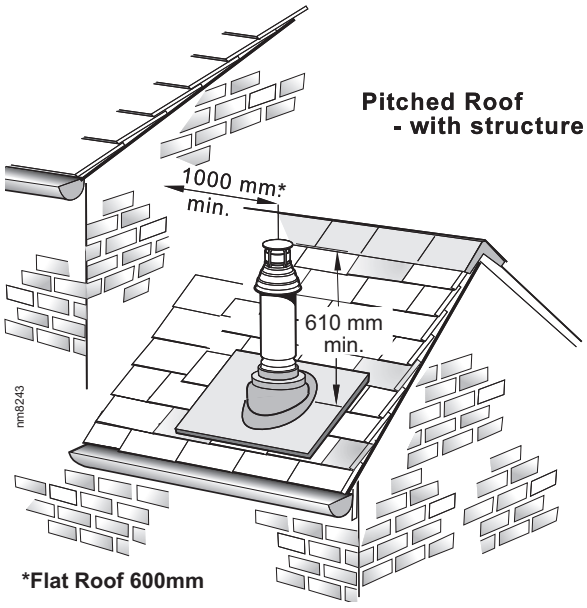

Terminal Position	Minimum Dimension
Directly below an opening, air brick, windows, etc.	300 mm
Below plastic / painted gutters	300 mm
Painted surface	300 mm
Below eaves or balcony	500 mm

31 FLUE ARRANGEMENT

Part No.	Description	60/100 Quantity	
		HE30	HE36
n/a	Maximum Flue Length (m)	5	5
201 180	Flue ext. 60/100	6	6
201 189	Terminal Vertical Roof 60/100	1	1
158 431	Weather Collar Pitched Roof	1	1
158 432	Weather Collar Flat Roof	1	1
201 182	90° Elbow Kit (60/100)	2	2
201 183	45° Elbow Kit (60/100)	2	2
201 869	Vertical Connector	1	1

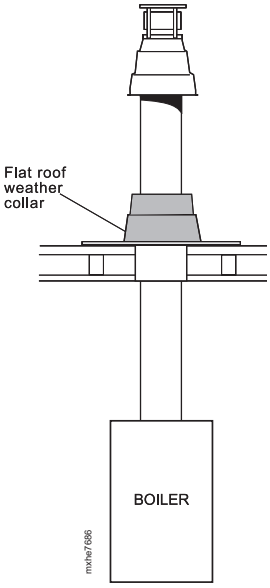

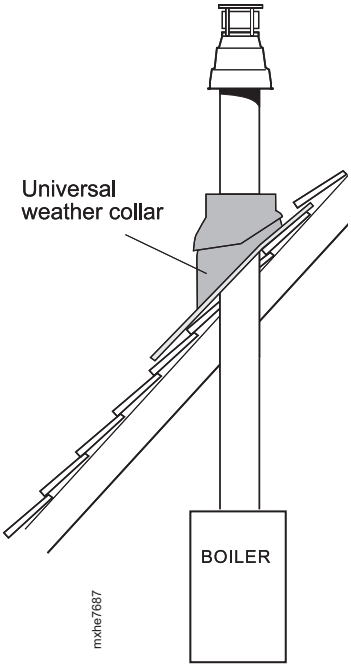

Note.
The equivalent flue length resistance of the 90° elbow kit (60/100) is 1m and the 45° elbow kit (60/100) is 0.75m.

32 ASSEMBLING THE ROOF FLUE KIT

Determine the correct height that the flue should terminate above the roof. If after calculating or measuring the overall flue height from the top of the boiler, it is necessary to cut both pipes of assembly A, then ensure they are cut equally leaving the inner flue tube 20mm longer than the outer air tube as supplied. (Refer to No. 5 below)

Ensure the cut pipe ends are free from any burrs.

1. Ensure the flue seal collar B is located onto the flue assembly A.
2. Position the roof flashing plate D (supplied separately) over the hole cut in the roof and insert flue assembly A from the roof end.
3. Fit the sealing gasket and push fit the vertical connector E (supplied separately) into the boiler flue connection and retain with the four securing screws provided. Lubricate flue seal using lubricant (supplied in hardware pack).
4. "Push" fit extension duct F (if required, supplied separately) and the roof flue kit assembly A into the vertical connector E. Lubricate seals using lubricant (supplied in hardware pack).
5. If the last extension duct requires cutting, measure the distance (outer ducts) between the duct and the terminal and add 100 mm to this dimension. This gives the length of the last extension duct.

   Note. *Check the position of the inner flue duct relative to the outer duct on the assembled extension duct(s) and ensure the terminal flue duct is cut 20mm longer than the air duct to ensure engagement in the final flue duct seal.*
6. Slide down and position the flue seal collar B over the roof plate D and secure it with the 3 screws C to the flue assembly A.
7. Finally ensure the roof flashing plate D is correctly sealed to the roof.

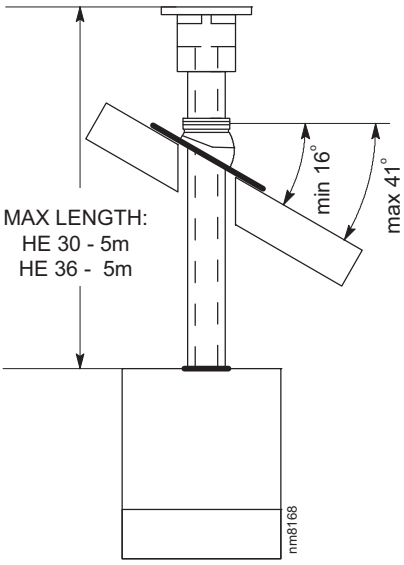

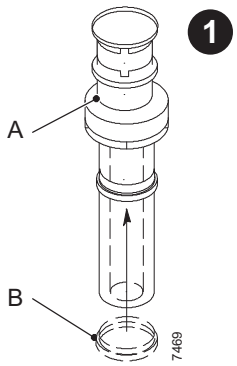

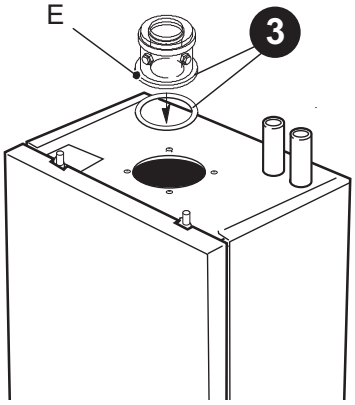

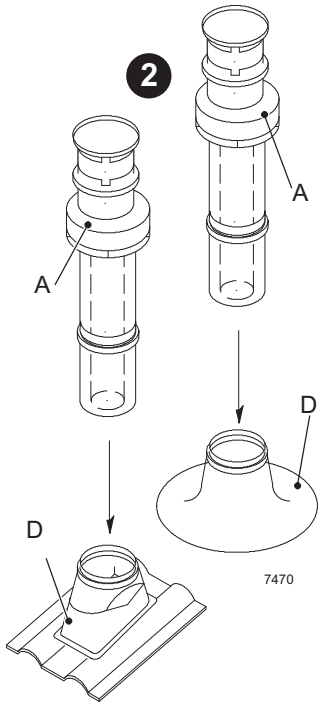

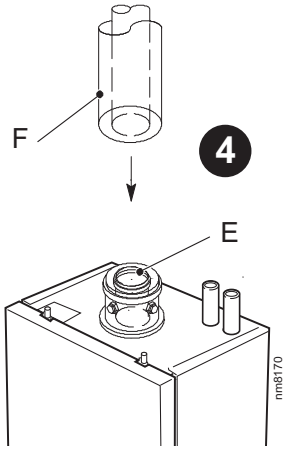

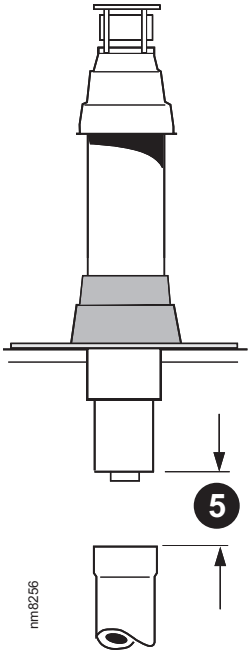

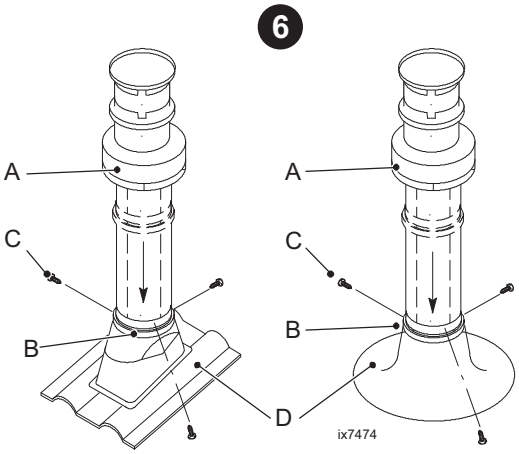

FLUE OUTLET

33 GAS CONNECTION

IMPORTANT. The gas service cock is sealed with a non-metallic fibre washer seal so must not be overheated when making capillary connections.

Refer to Frame 2 for details of the position of the gas connection.

N.B. The principle of the 1:1 gas valve ensures that the **icos HE** range is able to deliver it's full output at inlet pressures down to 14mb. However if dynamic pressures below 20mb are experienced ensure this is adequate for **ALL** other gas appliances in the property.

A boiler gas supply pipe length of 20m and not less than 15mm O.D. can be connected to the boiler via the gas service cock union.
Ensure that the gas supply pipe does not foul the boiler casing.

Refer to Frame 41 for details of the pressure test point position.

34 BOILER WATER CONNECTIONS

The boiler flow and return pipes are supplied fitted to the boiler and ready for top connection to 28mm pipes.

TOP CONNECTION

Connect the system pipework to the boiler flow and return pipes.

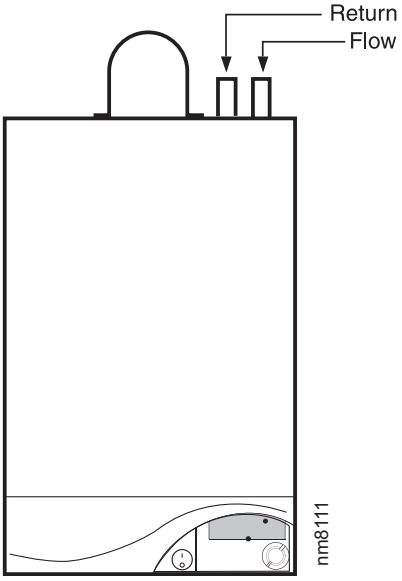

35 ELECTRICAL CONNECTIONS

WARNING. This appliance MUST be earthed.

A mains supply of 230 V ~ 50 Hz is required.

All external controls and wiring MUST be suitable for mains voltage.

The fuse rating should be 3 A.

Wiring external to the boiler MUST be in accordance with the current I.E.E. (BS.7671) Wiring Regulations and any local regulations.

Wiring should be 3 core PVC insulated cable NOT LESS than 0.75 mm^2 (24 x 0.2mm) and to BS. 6500, Table 16.

For IE reference should be made to the current ETCI rules for electrical installations.

Connection must be made in a way that allows complete isolation of the electrical supply - such as a double pole switch having a 3mm (1/8") contact separation in both poles, or a plug and socket serving only the boiler and system controls. The means of isolation must be accessible to the user after installation.

36 INTERNAL WIRING

A pictorial wiring diagram is shown in Frame 37.

1. Route the mains cable into the bottom LHS rear of the casing. If using the stand-off kit then route through the grommet.
2. Wire a permanent live supply into the 5-way remote plug terminals L3, N and ⏚.

   IMPORTANT. A permanent live is ESSENTIAL in order for the advanced diagnostic controls to function correctly.
3. Wire the switched live supply into L2 or connect L1 and L2 via external control switching, as shown in Frame 37. In either case, remove the wire link fitted L1 to L2.
4. Secure the mains lead with the cable clamp.
5. Connect the mains lead connector. Ensure it is fully located.

Note.
Ensure that the lengths of the current carrying conductors are shorter than the earth conductor so that if the cable slips in its anchorage the current carrying conductors become taut before the earth conductor.

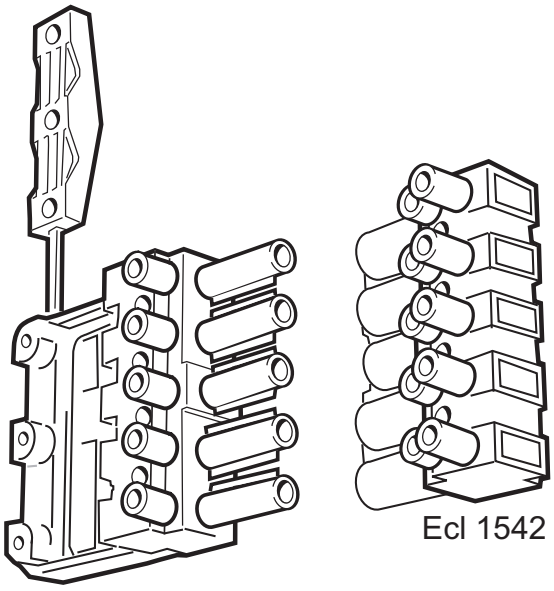

Incoming mains wiring detail

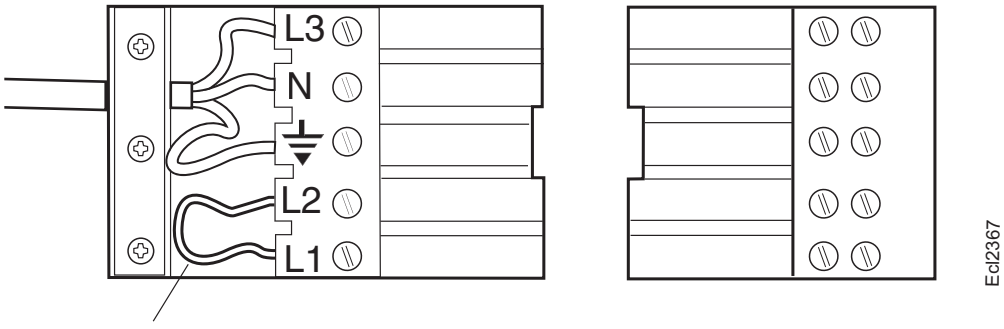

Remove link when connecting external programmer.

Mains Connector

(supplied in hardware pack)

Socket

(fixed to boiler)

37 PICTORIAL WIRING DIAGRAM

LEGEND

- **b** - blue
- **bk** - black
- **br** - brown
- **gy** - grey
- **or** - orange
- **pk** - pink
- **r** - red
- **v** - violet
- **w** - white
- **y** - yellow
- **y/g** - yellow/green

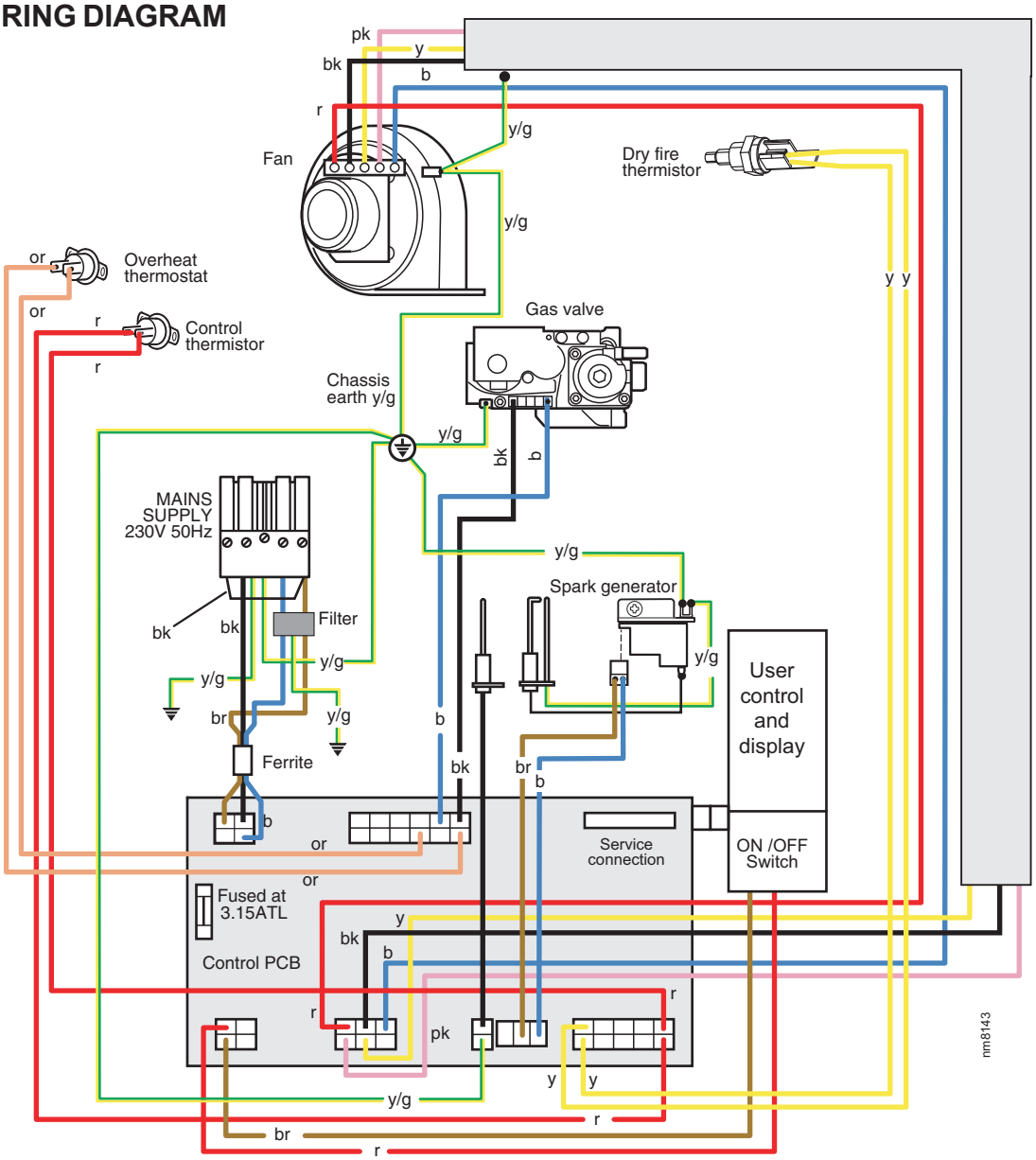

38 FUNCTIONAL FLOW WIRING DIAGRAM

LEGEND

- **b** - blue
- **bk** - black
- **br** - brown
- **gy** - grey
- **or** - orange
- **pk** - pink
- **r** - red
- **v** - violet
- **w** - white
- **y** - yellow
- **y/g** - yellow/green

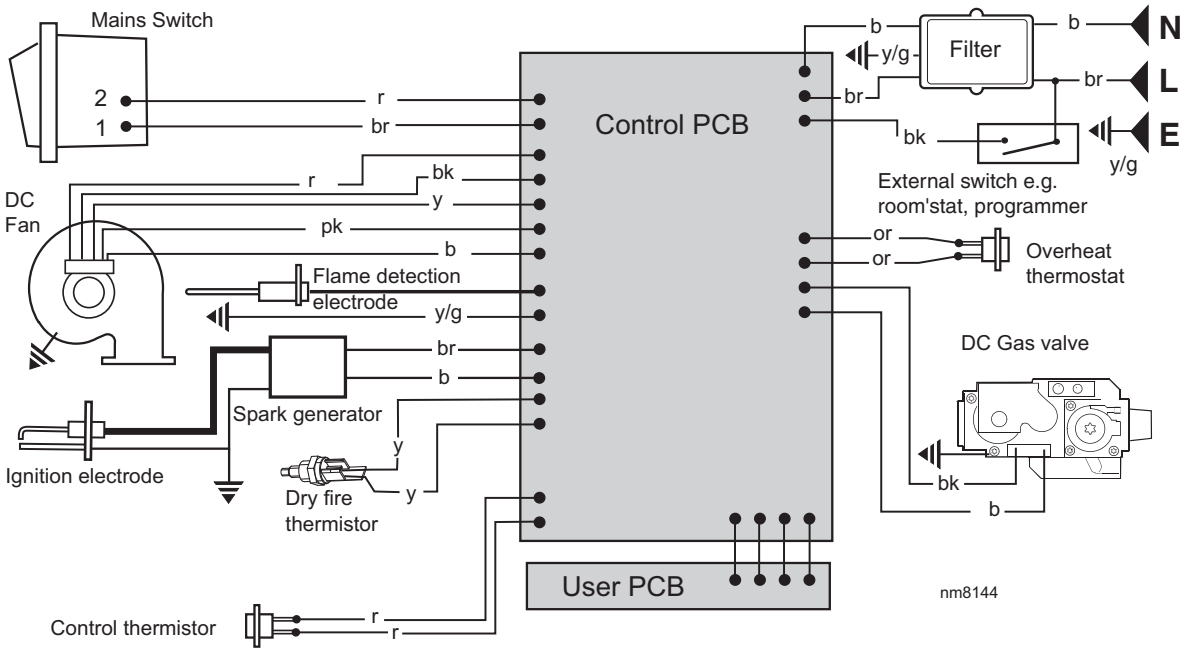

39 EXTERNAL ELECTRICAL CONTROLS

Wiring external to the boiler MUST be in accordance with the current I.E.E. (BS.7671) Wiring Regulations and any local regulations.

For IE reference should be made to the current ETCI rules for electrical installations.

The fuse should be 3A.

Room Thermostat

If the thermostat has a neutral connection use it. (It provides for more energy efficient operation by reducing switching temperature differentials.)

Frost Protection

If parts of the pipework run outside the house or if the boiler will be left off for more than a day or so then a frost thermostat should be wired into the system. This is usually done at the programmer, in which case the programmer selector switches are set to OFF and all other controls MUST be left in the running position.

The frost thermostat should be sited in a cold place but where it can sense heat from the system.

If the boiler is installed in a garage it may be necessary to fit a pipe thermostat, preferably on the return pipework.

Important. Ensure that the frost thermostat is wired so that the system pump and/or external diverter valve is energised, as appropriate.

Designation of the terminals will vary but the programmer and thermostat manufacturers' leaflets will give full details.

Diagram A shows an application to boilers fitted with a room thermostat only.

Diagrams B and C show applications to boilers fitted with alternative time controls.

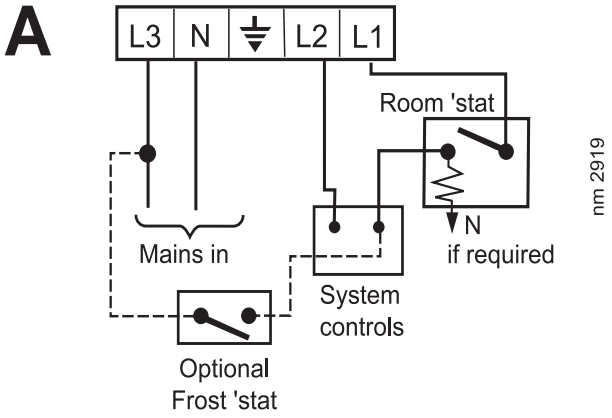

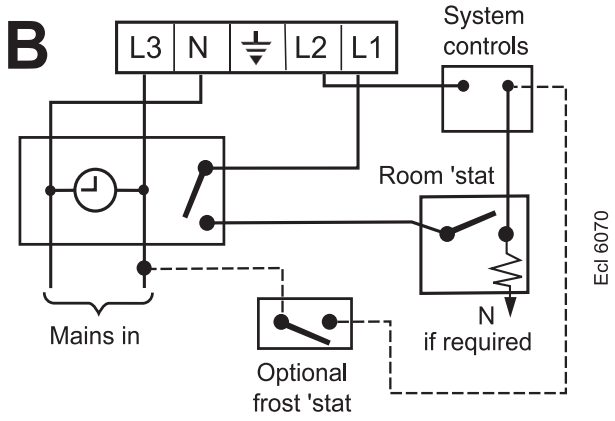

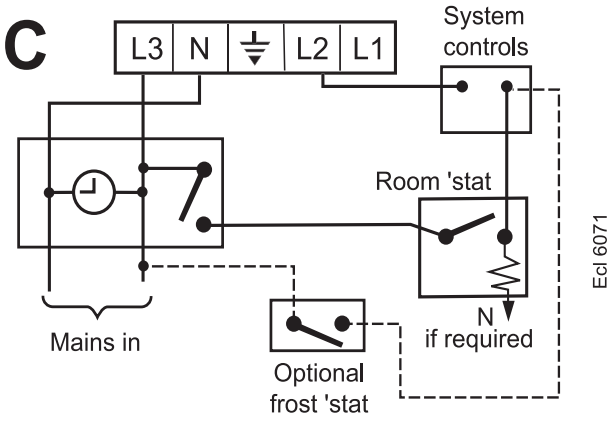

Earths are not shown for clarity but MUST NEVER BE OMITTED.

40 COMMISSIONING AND TESTING

A. ELECTRICAL INSTALLATION

1. Checks to ensure electrical safety should be carried out by a competent person.
2. ALWAYS carry out the preliminary electrical system checks, i.e. earth continuity, polarity, resistance to earth and short circuit, using a suitable test meter.

B. GAS INSTALLATION

1. The whole of the gas installation, including the meter, should be inspected and tested for soundness and purged in accordance with the recommendations of BS. 6891. In IE refer to I.S. 813:2002.
2. Purge air from the gas installation by the approved methods only.

WARNING. **Whilst effecting the required gas soundness test and purging air from the gas installation, open all windows and doors, extinguish naked lights and DO NOT SMOKE.**

41 INITIAL LIGHTING

Note. *Boiler is shown with the front panel and sealing panel removed.*

LEGEND

A On/Off switch.
B Thermostat knob.
C 'Burner On' neon.
D Reset button.
E Injector pressure test point.
F Inlet pressure test point.
G Gas service cock.
H Overheat thermostat.
J Control thermistor.
K Spark generator.
L Dry Fire Thermostat.

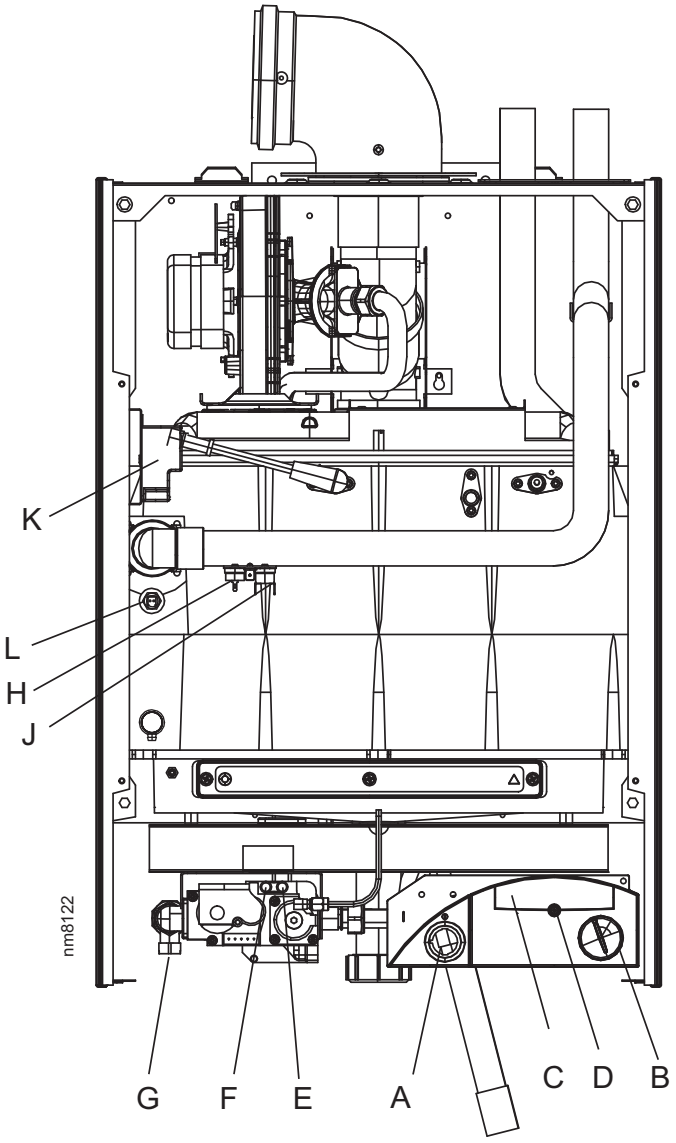

1. Check that the system has been filled and that the boiler is not air locked.

Note.

It is important the burner is not operated before the system is fully vented of air. If it is necessary to operate the system pump to assist venting of the air this must be done with the gas service cock turned off.

2. Check that all drain cocks are closed and any valves in the flow and return are open.
3. Check the electrical supply is off.
4. Ensure the boiler sealing panel is fitted.
5. Check the gas service cock is open.
6. Check that the boiler on/off switch (A) is OFF
7. Slacken the screw in the inlet pressure test point (G) and connect a gas pressure gauge via a flexible tube.
8. Switch the electricity supply ON and check all external controls are calling for heat.
9. Set the boiler thermostat knob (B) to position 6 and switch the boiler on/off switch (A) to ON. The boiler control should now go through its ignition sequence until the burner is established.
10. If the boiler does not light after 3 attempts the fault codes *L'F'* will be displayed. Press the reset button (D); the boiler will then repeat its ignition sequence. When the burner is established the WHITE burner ON neon (C) will be permanently illuminated
11. Ensure that with the boiler operating the dynamic gas pressure is able to obtain maximum output. Refer to Table 2.

    N.B. The principle of the 1:1 gas valve ensures that the **icos HE** range is able to deliver it's full output at inlet pressures down to 14mb. However if dynamic pressures below 20mb are experienced ensure this is adequate for **ALL** other gas appliances in the property.

    IMPORTANT.
    The gas input to the burner is regulated by the gas valve according to the air flow produced by the fan. It is NOT user-adjustable. Any interference to sealed settings on the gas valve will adversely affect operation and render our warranty void.
12. Switch OFF the boiler on/off switch.
13. Remove the pressure gauge and tube. Tighten the sealing screw in pressure test point. Ensure a gas tight seal is made.
14. Refit the boiler front panel and bottom panel.

THE DISPLAY

The user control has one neon and one display to inform the user about the status: the display will show the status of the boiler and the neon will show the status of the flame. If no flame is detected the neon is blinking. When the flame is detected the neon will be lit permanently.

Below is a list with display function in normal operation.

0 Standby. No demand for heat present.

c Boiler is active for central heating.

H Boiler is in lockout for a specific error. The display will be blinking, alternating with a number or letter to show which error is detected.

L Boiler is in lockout for a specific error. The display will be blinking, alternating with a number or letter to show which error is detected.

P Boiler frost protection. Boiler will fire when temperature is less than 3 degrees.

42 GENERAL CHECKS

Make the following checks for correct operation:

1. **Central Heating**
   The correct operation of ANY programmer and all other system controls should be proved. Operate each control separately and check that the main burner or circulating pump, as the case may be, responds.

   Ensure the external controls are calling for heat. After ignition the display should read:

   c ☀ - white neon on

2. **Gas Rate**
   Operate the boiler for 10 minutes. Check the boiler gas rate (see Table 2), ensuring the boiler is at full output whilst measurements are recorded.

3. **Water Circulation System**

Knob Setting	Flow Temperature °C	°F
Min	30	86
Max	82	180

- The temperatures quoted alongside are approximate, and vary between installations.

Note. *Fernox Superfloc, Sentinel X300 (new systems) or X400 (existing systems) flushing solutions should be used during the flushing procedure. Refer to Frame 9.*

a. With the system HOT examine all water connections for soundness.

b. With the system still HOT, turn off the gas, water and electricity supplies to the boiler and drain down to complete the flushing process.

c. Refill and vent the system, add inhibitor (see Frame 9), clear all air locks and again check for water soundness. Adhere the water treatment warning label, supplied in the hardware pack, in a *prominent position* on the system, to prevent the use of incorrect water treatment additives.

d. Balance the system. Refer to Frame 4.

4. Check the condensate drain for leaks and check that it is discharging correctly

5. Finally set the controls to the user's requirements.

43 HANDING OVER

After completing the installation and commissioning of the system the installer should hand over to the householder by the following actions:

1. Hand the Installation/User's Instructions to the householder and explain his or her responsibilities under current Gas Safety (Installation and Use) Regulations or rules in force.

2. Explain and demonstrate the lighting and shutting down procedures.

3. The operation of the boiler and the use and adjustment of ALL system controls should be fully explained to the householder to ensure the greatest possible fuel economy consistent with household requirements of both heating and hot water consumption.
   Advise the User of the precautions necessary to prevent damage to the system and to the building in the event of the system remaining inoperative during frosty conditions.

4. Explain the function and the use of the boiler heating controls.

5. Explain the function of the boiler fault mode.
   Emphasise that if a fault is indicated the boiler should be turned off and a CORGI registered installer consulted. In IE contact a competent person.

6. Explain and demonstrate the function of time and temperature controls, radiator valves, etc., for the economic use of the system.

7. If any programmer is fitted then draw attention to the Programmer User's Instructions and hand them to the householder.

8. **After installation and commissioning please complete the benchmark Commissioning Checklist before handover to the customer.**
   For IE, its is necessary to complete a "Declaration of Conformity" to indicate compliance to I.S. 813:2002.

9. **IMPORTANT**

   Stress the importance of regular servicing by a CORGI registered installer and that a comprehensive service should be carried out AT LEAST ONCE A YEAR. In IE servicing work must be carried out by a competent person.

10. As the installer you may wish to undertake the service contract yourself or alternatively offer to the customer the benefits of the Ideal Care Scheme, details of which are outlined in the household pack supplied with this boiler.

44 SERVICING SCHEDULE

To ensure the continued safe and efficient operation of the appliance it is recommended that it is checked at regular intervals and serviced as necessary. The frequency of servicing will depend upon the installation condition and usage but should be carried out annually. It is the law that any service work must be carried out by a CORGI registered installer. In IE service work must be carried out by a competent person.

1. Light the boiler and carry out a pre-service check, noting any operational faults.
2. Check the gas consumption.
3. Connect a suitable gas analyser to the sampling point on top of the boiler or into the flue terminal, if access is possible. Refer to Frame 46.

   For correct boiler operation the CO/CO_2 ratio of the flue gas should not be greater than 0.004 ratio. If this is the case, and the gas input is at least 90% of the nominal, once compliance with the note above is ensured, then no further action need be taken. If not, proceed to step 4 .
4. Clean the main burner.
5. Clean the heat exchanger and 'S' trap.
6. Check the main injector for blockage or damage.
7. Wherever possible, remove and clean the condensate 'S' trap (refer to Frame 49) and check the drain for blockage.
8. Check that the flue terminal is unobstructed and that the flue system is sealed correctly.

The servicing procedures are covered more fully in Frames 44-68 and MUST be carried out in sequence.

Note. *In order to carry out either servicing or replacement of components the boiler front panel, bottom panel and sealing panel must be removed. Refer to Frames 45 and 46.*

WARNING.
Always turn off the gas supply at the gas service cock, and switch off and disconnect the electricity supply to the appliance before servicing.

IMPORTANT.

9. After completing the servicing or exchange of components always test for gas soundness and carry out functional checks as in paragraphs 2 and 3.
10. When work is complete the sealing panel MUST be correctly refitted, ensuring that a good seal is made.

DO NOT OPERATE THE BOILER IF THE SEALING PANEL IS NOT FITTED.

11. Complete the service section in the Benchmark Commissioning Checklist.

45 BOILER FRONT PANEL REMOVAL

1. Remove the 2 screws from the underside of the appliance.
2. Pull the front panel forward at the bottom and lift to disengage it from the top lugs.

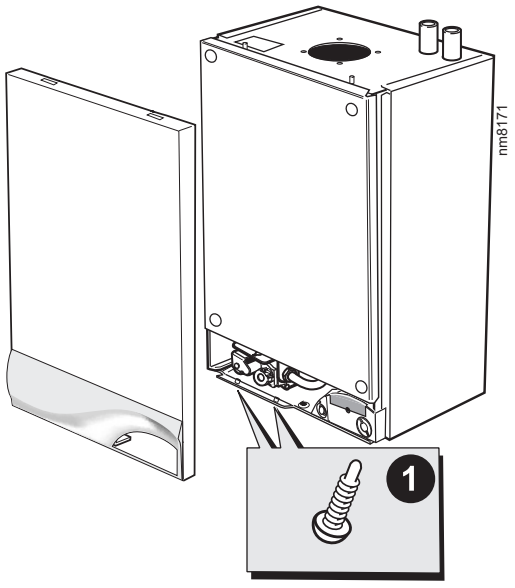

46 BOILER SEALING PANEL/ BOTTOM PANEL REMOVAL

1. To remove the sealing panel remove the 4 screws.
2. Remove the panel.
3. To remove the bottom panel remove the 4 screws.

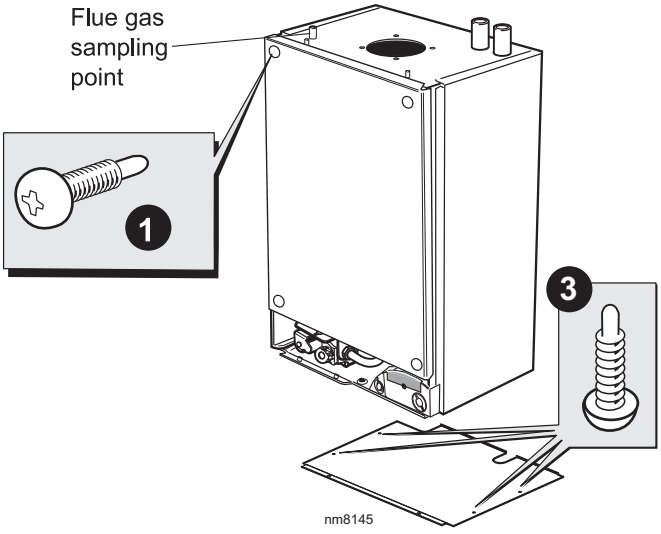

47 FAN AND VENTURI ASSEMBLY REMOVAL AND CLEANING

1. Disconnect the electrical leads from the fan.
2. Undo the gas pipe union connection to the injector housing.
3. Undo the screw on the fan mounting bracket.
4. Lift off the fan and venturi assembly.
5. Inspect the injector for blockage or damage.

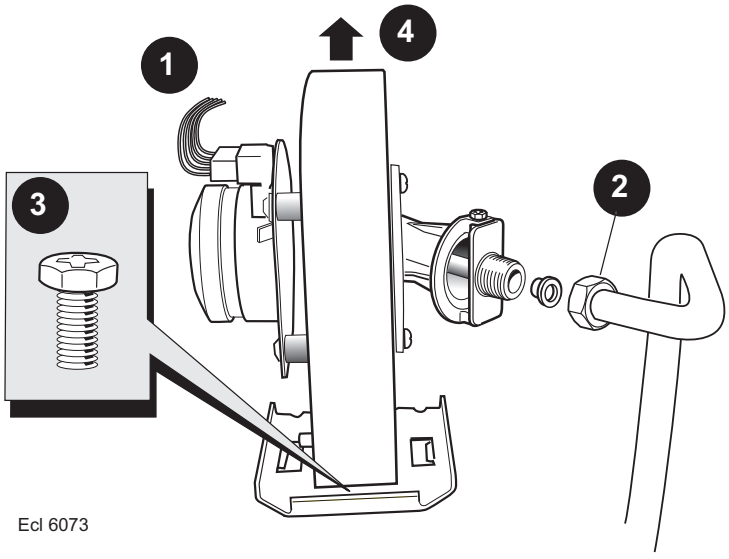

48 BURNER REMOVAL AND CLEANING

1. Remove the 6 screws securing the burner (the centre screw at the rear is extended to ease access).
2. Lift off the burner from the combustion chamber.

IMPORTANT

The burner head is a ceramic plaque construction. Care must be taken to ensure that **the burner is not placed down upon its face** as this may cause damage to the ceramic.

3. Brush off any deposits that may be on the ceramic with a SOFT brush.
4. Inspect the sealing gasket around the burner for any signs of damage. Replace as necessary.

Note.

Take care not to disturb the ionisation probes at the front and rear of the combustion chamber.

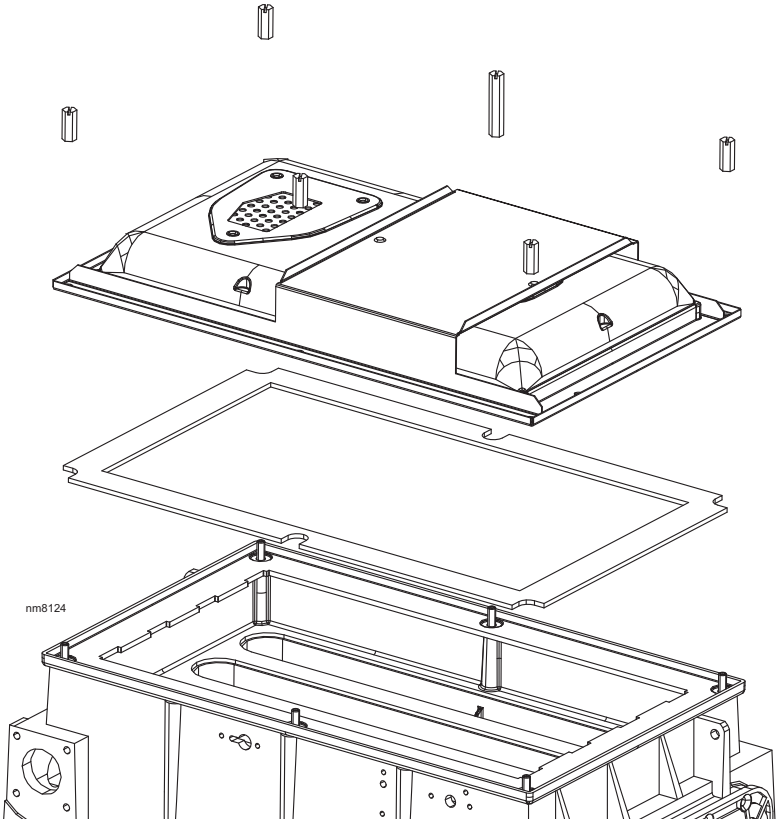

49 CLEANING THE CONDENSATE 'S' TRAP

If condensate pump fitted refer to separate instructions for cleaning procedure.

Note. *Care must be taken with residual water when removing the outlet pipe.*

1. Remove the plastic union sealing nut on the bottom of the condensate 'S' trap.
2. Remove and clean from the cartridge and ball any residual deposits.
3. Inspect the opaque 'S' trap for further signs of dirt and clean as necessary.
4. Replace the cartridge and ball and replace the plastic sealing nut.

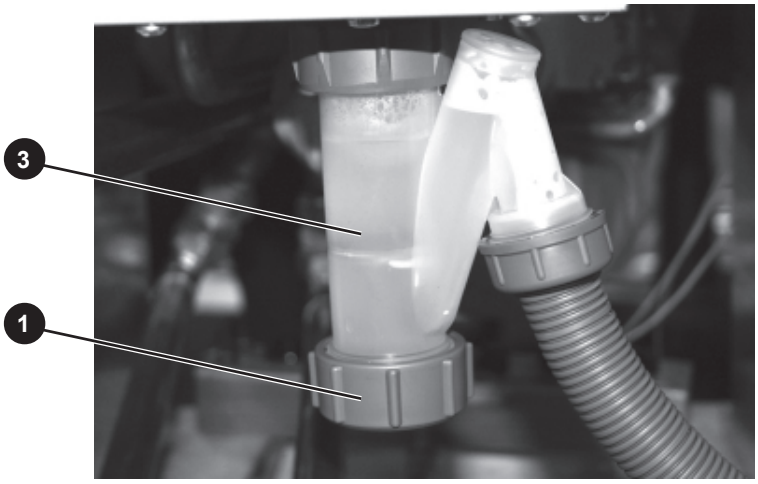

50 CLEANING THE HEAT EXCHANGER

1. Remove ignition electrode. Refer to Frame 56.
2. Remove flame detection electrode. Refer to Frame 57.
3. Remove the 3 screws retaining the sump cover and remove.
4. Using a suitable tool clean the exposed heat exchanger fins through the sump cover. Also vacuum any debris from the top of the heat exchanger.
5. Access to the base of the heat exchanger is now possible. Brush clean any deposits from the base of the heat exchanger and remove any loose deposits from the sump.
6. Inspect the ignition and detection electrodes. Ensure that they are clean and in good condition - replace if necessary.
7. Check that the ignition and detection gaps are correct. Refer to Frames 56 &

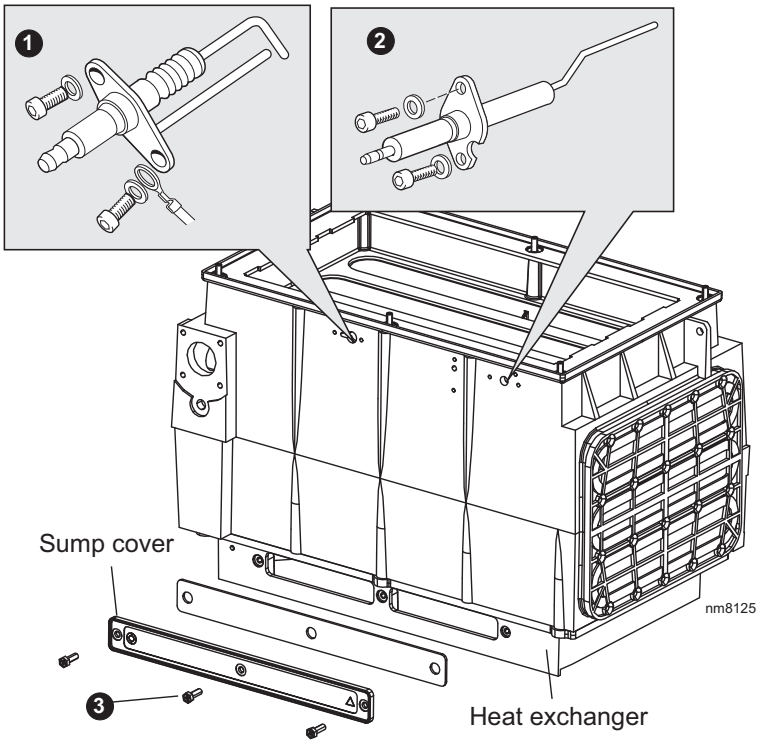

51 REASSEMBLY

Reassemble the boiler in the following order.

1. Refit the condensate 'S' trap, ensuring that it is full of water.
2. Refit the sump cover plate.
3. Refit the electrodes (check dimensions Frames 56 & 57).
4. Refit the burner.
5. Refit the fan / venturi assembly.
6. Reconnect the fan electrical leads.
7. Refit the boiler sealing panel.

IMPORTANT.

Ensure the boiler sealing panel is correctly fitted and that a good seal is made.

8. Refit the boiler front and bottom panels.
9. Turn on the gas supply at the gas service cock.
10. Reconnect the electrical supply.

52 REPLACEMENT OF COMPONENTS

GENERAL

When replacing ANY component:

1. Isolate the electricity supply.
2. Turn off the gas supply.
3. Remove the boiler front panel. Refer to Frame 45.

After replacing ANY component check operation of the boiler including gas soundness, gas rate and combustion test.

IMPORTANT

When work is complete, the sealing panel must be correctly fitted, ensuring that a good seal is made.

Note.

In order to assist fault finding, the control panel has an LED diagnostic display. The key to boiler fault conditions is shown in Frame 69.

THE BOILER MUST NOT BE OPERATED WITHOUT THE SEALING PANEL FITTED

53 CONTROL THERMISTOR REPLACEMENT

1. Refer to Frame 52.
2. Remove the boiler front panels and inner sealing panel. Refer to Frames 45 and 46.
3. Pull the electrical leads off the control thermistor and remove earth connection.
4. Remove the two screws retaining the control thermistor.
5. Replace control thermistor retaining with the fixing screws previously removed and reconnect leads.
6. Reassemble the boiler in reverse order.
7. Check the operation of the boiler. Refer to Frame 52.

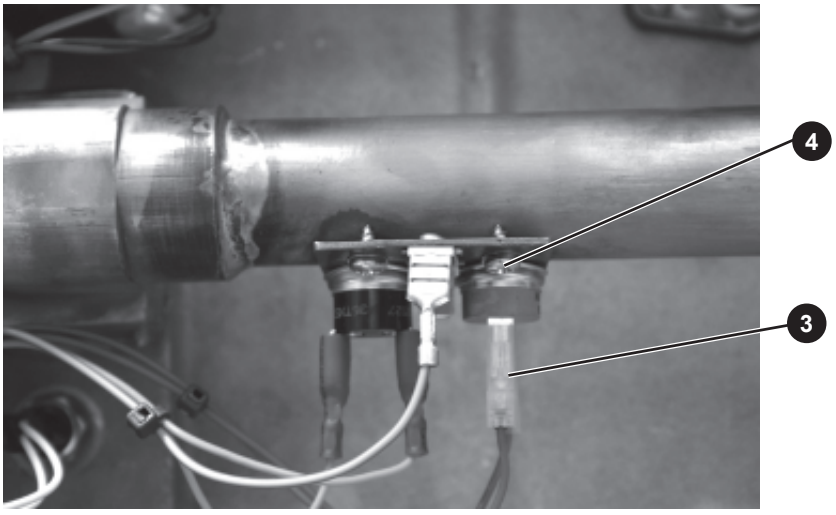

54 FAN REPLACEMENT

1. Refer to Frame 52.
2. Remove the boiler front and sealing panels. Refer to Frames 45 & 46.
3. Disconnect the electrical leads from the fan.
4. Unscrew the gas pipe union connection to the injector housing.
5. Unscrew and remove the screw retaining the fan mounting bracket.
6. Remove the fan and venturi assembly.
7. Remove the 3 screws and remove the venturi assembly, *noting the orientation of the venturi in relation to the fan body.*
8. Transfer the venturi assembly to the new fan, replacing the gasket if evidence of damage or deterioration is visible.
9. Fit the new fan / venturi assembly.
10. Reassemble the boiler in reverse order, taking care not to overtighten the screw on the fan mounting bracket.
11. Check the operation of the boiler. Refer to Frame 52.

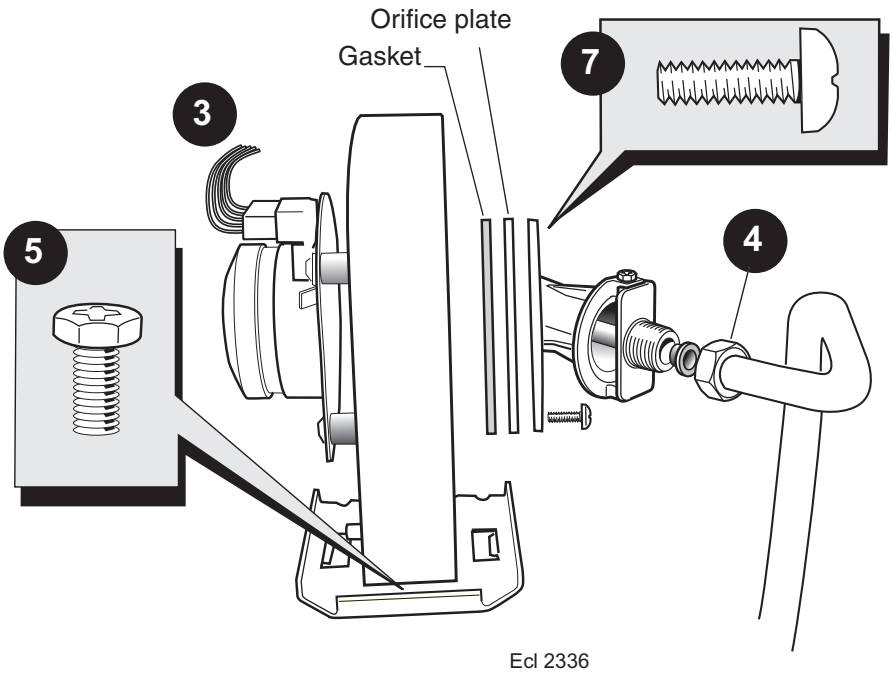

55 BURNER REPLACEMENT

1. Refer to Frame 52.
2. Remove the boiler front and sealing panels. Refer to Frames 45 & 46.
3. Remove the fan assembly. Refer to Frame 54.
4. Remove the 6 screws securing the burner (the centre screw at the rear is extended to ease access).
5. Lift off the burner from the combustion chamber.
6. Fit the new burner, replacing any damaged or deteriorating sealing gasket.
7. Reassemble in reverse order.
8. Check the operation of the boiler. Refer to Frame 52.

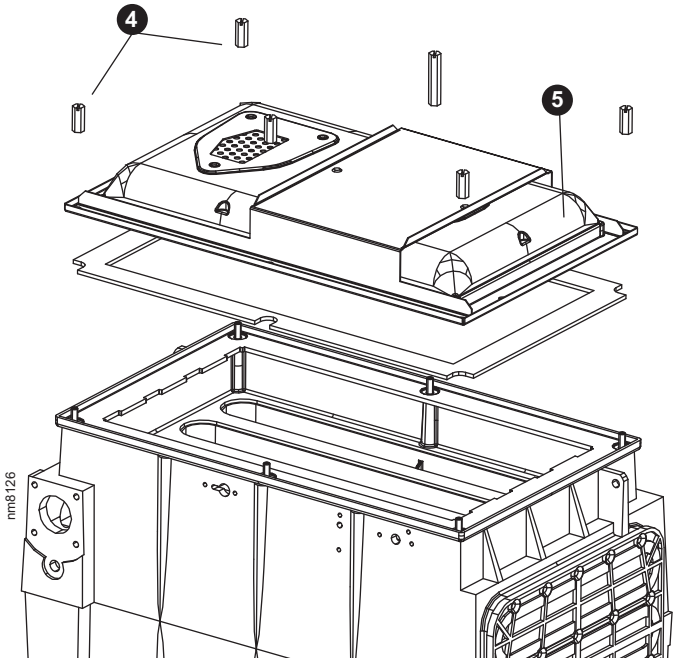

56 IGNITION ELECTRODE REPLACEMENT

1. Refer to Frame 52.
2. Remove the boiler front panels and inner sealing panel. Refer to Frames 45 and 46.
3. Unplug the ignition lead from the electrode.
4. Remove the burner. Refer to Frame 48.
5. Remove the earth lead from the ignition electrode.
6. Remove the remaining screw holding the ignition electrode to the combustion chamber.
7. Remove the electrode.
8. Fit the new ignition electrode, using the new gasket supplied. Check dimensions as shown.
9. Reassemble in reverse order.
10. Check operation of the boiler. Refer to Frame 52.

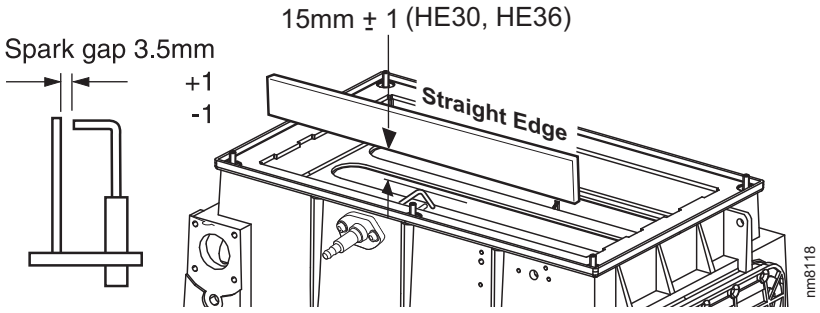

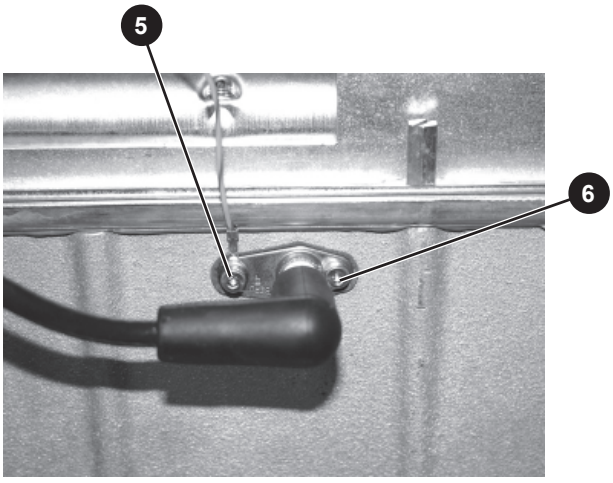

57 FLAME DETECTION ELECTRODE REPLACEMENT

1. Refer to Frame 52.
2. Remove the boiler front panels and inner sealing panel. Refer to Frames 45 and 46.
3. Unplug the flame detection lead from the electrode.
4. Remove the burner. Refer to Frame 48.
5. Remove the 2 screws holding the flame detection electrode to the combustion chamber.
6. Remove the flame detection electrode.
7. Fit the new flame detection electrode, using the new gasket supplied. Check dimension as shown.
8. Reassemble in reverse order.
9. Check operation of the boiler. Refer to Frame 52.

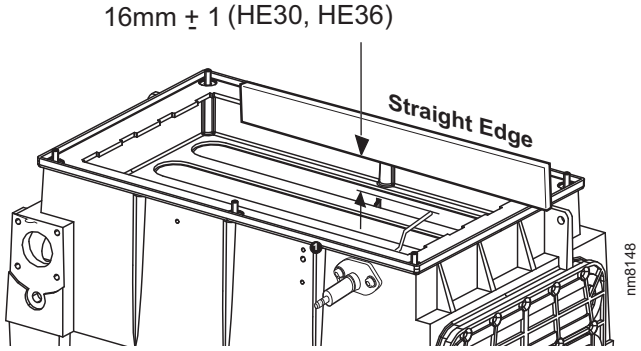

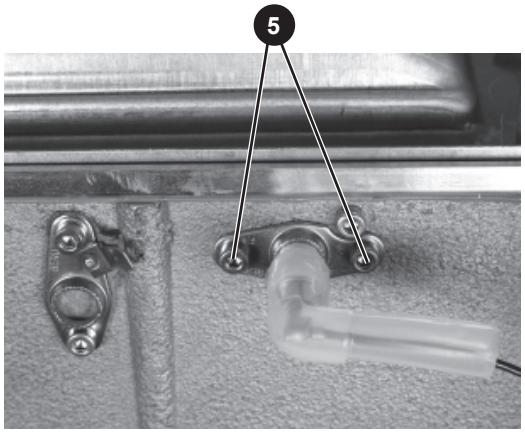

58 SPARK GENERATOR REPLACEMENT

1. Refer to Frame 52.
2. Disconnect the leads from the spark generator and bracket.
3. Remove the M4 screw securing the spark generator bracket to the casing side panel.
4. Remove the 2 M4 screws securing the spark generator to the bracket.
5. Fit the new spark generator and re-assemble in reverse order.
6. Check operation of the boiler. Refer to Frame 52.

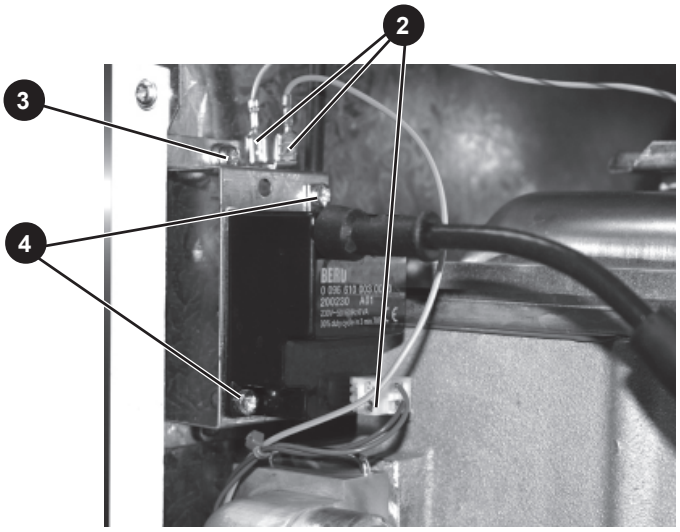

59 BURNER INJECTOR REPLACEMENT

1. Refer to Frame 52.
2. Remove the boiler front and sealing panels. Refer to Frames 45 & 46.
3. Remove the fan / venturi assembly. Refer to Frame 47.
4. Remove the 2 injector housing screws.
6. Withdraw the injector housing.
7. Fit the new injector housing, complete with injector.
8. Reassemble in reverse order, ensuring that the new gas seal supplied is located correctly in the injector housing.
9. Check operation of the boiler. Refer to Frame 52.

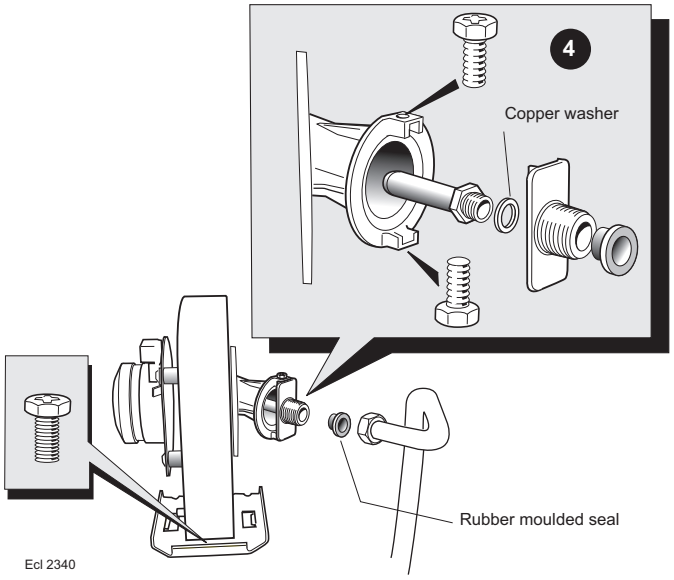

60 GAS CONTROL VALVE REPLACEMENT

1. Refer to Frame 52.
2. Remove the boiler front, bottom and sealing panels. Refer to Frames 45 & 46.
3. Unplug the electrical lead from the gas control valve and disconnect the earth wire.
4. Undo the sensing tube connection from the gas control valve.
5. Undo the union nut between the gas valve and the gas inlet cock.
6. Undo the union nut on the outlet side of the gas control valve.
7. Undo the gas valve bracket screw, slide the gas valve forward and remove.
8. Remove the valve fixing bracket.
9. Transfer the mounting bracket and gas inlet pipe to the new gas control valve.
10. Fit new gas control valve, ensuring that any seals showing damage or deterioration are replaced.
11. Reassemble in reverse order.
12. Ensure the sensing tubing is correctly replaced.
13. Check operation of the boiler. Refer to Frame 52.

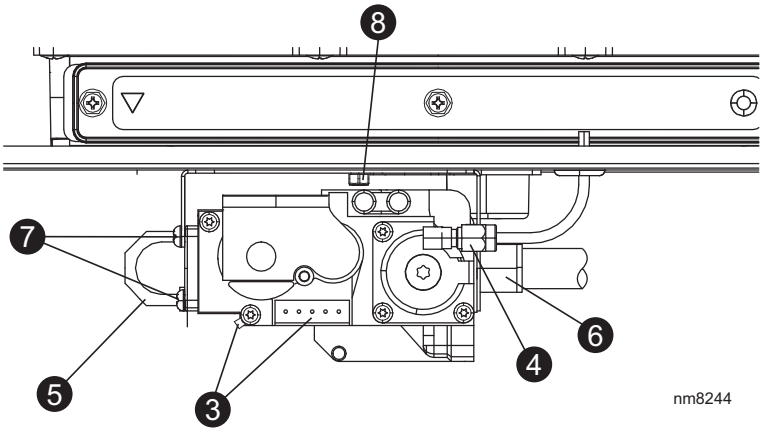

61 CONTROL BOX REPLACEMENT

1. Refer to Frame 52.
2. Remove the front panel.
3. Remove the bottom panel.
4. Remove the 2 control box screws.
5. Carefully unplug all the electrical wiring from the control box.
6. With the control box lowered, pull the assembly forward to remove from the housing.
7. Remove the user control from the assembly.
8. Transfer the mounting brackets to the new control box.
9. Reassemble in reverse order, ensuring that the control box is located correctly in the housing before reconnecting the electrical wiring.
10. Check operation of the boiler. Refer to Frame 52.

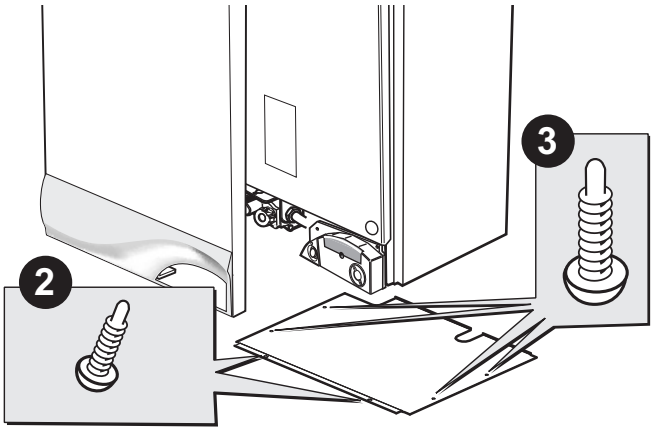

N.B. To change the user control only.

11. Loosen the screw on the underside of the user control.
12. Pull the display unit forward to remove.
13. Push the new display unit into position.
14. Reassemble in reverse order.
15. Check the operation of the boiler. Refer to Frame 52.

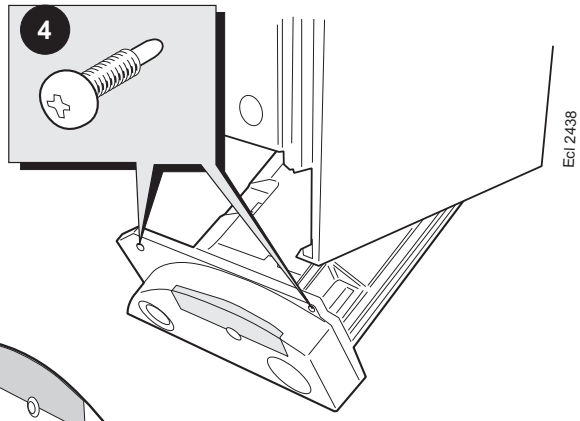

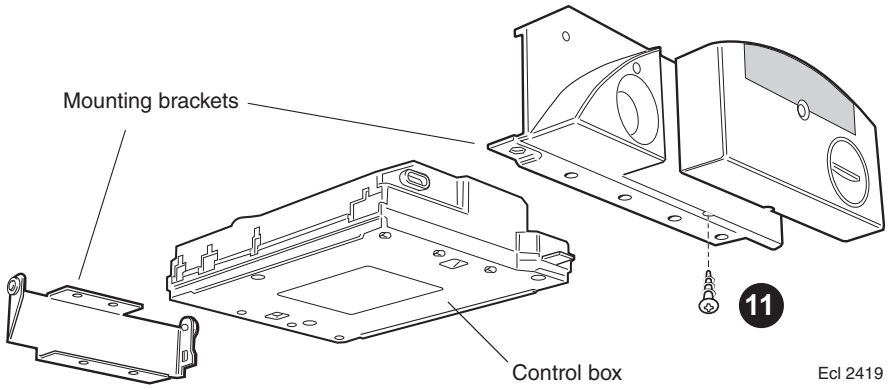

62 MAINS SWITCH REPLACEMENT

1. Refer to Frame 52.
2. Remove the boiler front and bottom panel. Refer to Frames 45 & 46.
3. Remove the 2 control box screws and lower the control box.
4. Push out the mains switch from the rear, as shown.
5. Refit the new switch, ensuring that the electrical leads are replaced on the correct terminals (refer to Frame 38) and the key on the switch is correctly aligned with the slot in the plastic moulding.
6. Reassemble in reverse order.
7. Check operation of the boiler. Refer to Frame 52.

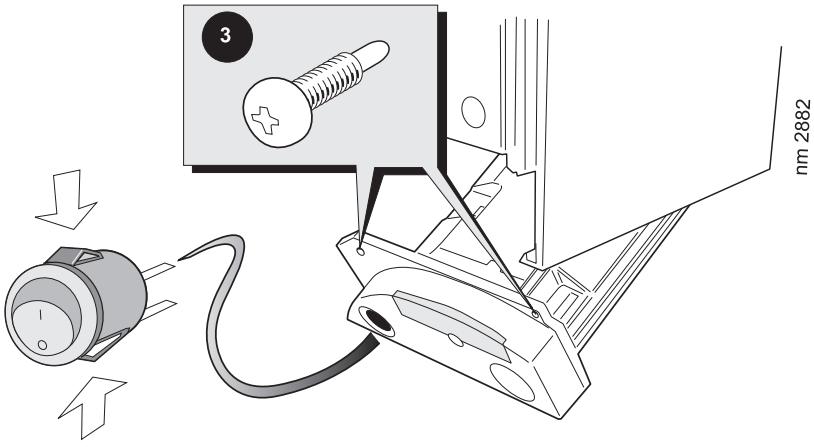

63 OVERHEAT THERMOSTAT REPLACEMENT

1. Refer to Frame 52.
2. Remove the boiler front panels and inner sealing panel.
3. Pull off the 2 electrical leads from the thermostat body.
4. Remove the 2 screws retaining the O/H thermostat.
5. Fit the new thermostat, and reconnect leads
6. Reassemble in reverse order.
7. Check operation of the boiler. Refer to Frame 52.

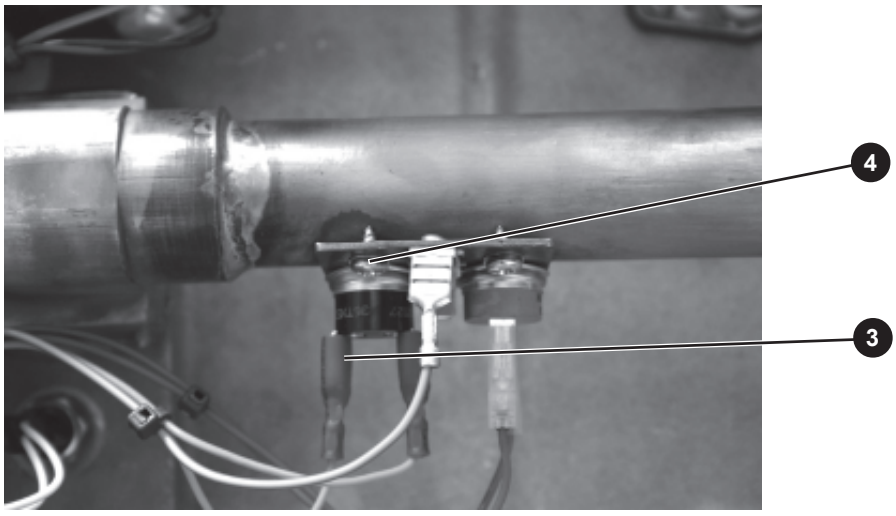

64 DRY FIRE THERMISTOR REPLACEMENT

1. Refer to Frame 52.
2. Remove the boiler front panels and inner sealing panel. Refer to Frames 45 and 46.
3. Drain down the system.
4. Drain down the heat exchanger from the drain cock.
5. Pull off the electrical connection.
6. Unscrew and withdraw the thermistor.
7. Fit the new thermistor, using the gasket supplied.
8. Reassemble in reverse order.
9. Check operation of the boiler. Refer to Frame 52.

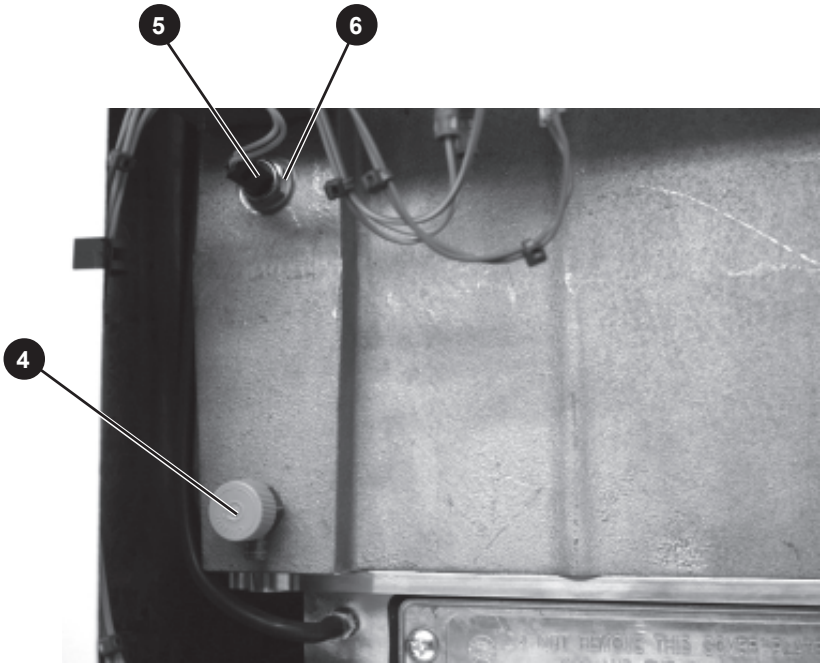

65 HEAT EXCHANGER REPLACEMENT

Note. *If the installation allows the boiler to be removed from the wall, the replacement will be more easily conducted if this is done. This will necessitate disconnection of all services to the boiler. If this is possible, remove the boiler after step 10.*

Refer also to Frame 10, 'Boiler Assembly - Exploded View'.

1. Refer to Frame 52.
2. Remove front, bottom and sealing panels. Refer to Frames 45 & 46 and remove painted side panels.
3. Remove the control box and place to one side. Refer to Frame 61.
4. Attach a length of hose to the drain nipple on the bottom of the heat exchanger and drain down the boiler.

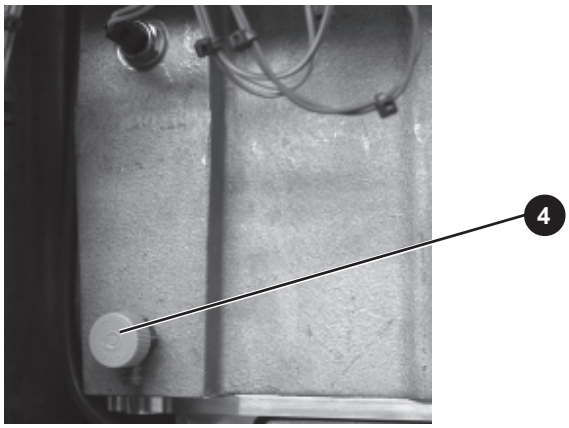

5. Remove the fan assembly and place to one side. Refer to Frame 54.
6. Remove the ignition and detection electrodes. Refer to Frames 56 & 57.
7. Remove the spark generator. Refer to Frame 58.
8. Remove the burner and place to one side. Refer to Frame 55.
9. Release the flue from the turret.
10. Remove the turret from the boiler. Refer to Frame 15.
11. Release the silicon tubing from the sample point.
12. Release the electrical connections to the dry fire thermistor. Refer to Frame 64.
13. Release the electrical connections to the control thermistor and overheat thermostat. Refer to Frames 53 and 63.
14. Remove the retaining clip off the flow pipe connection and cut or disconnect flow and return pipework from the system.

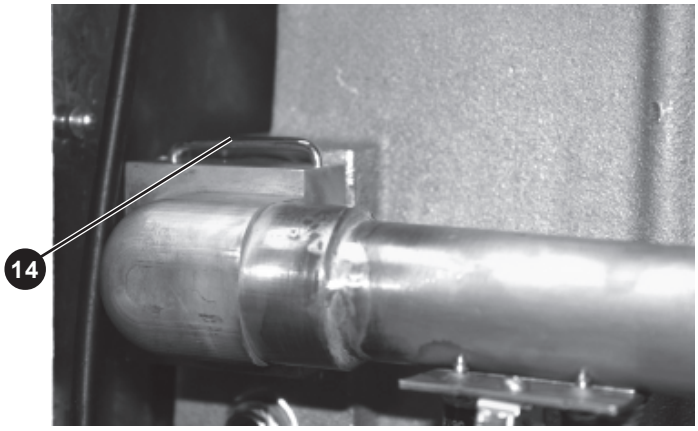

15. Remove the pipe cover plate off the boiler top panel.
16. Pull the flow pipe off the heat exchanger and remove from the casing.
17. Remove the two screws retaining the flue manifold bracket, (screws located on the top panel of the boiler and the LH side of the flue manifold bracket inside the boiler). Slide out the flue manifold bracket, then slide out the plastic flue manifold assembly from the keyhole slots on the back panel, and remove from the joint at the back of the sump.

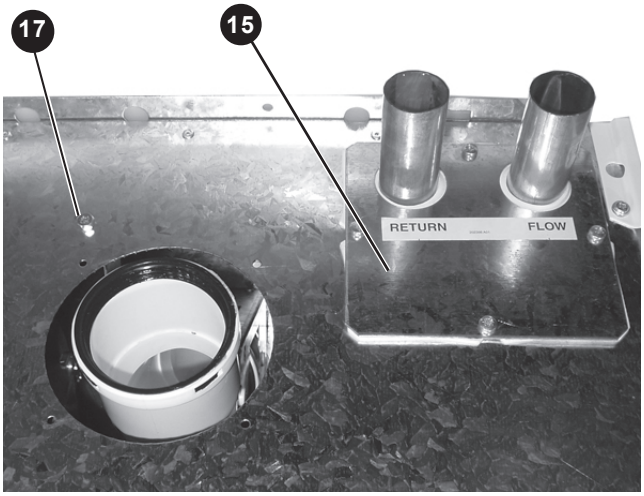

continued .....

66 HEAT EXCHANGER REPLACEMENT *continued .....*

18. Undo the 5 retaining screws from the boiler bottom panel.

19. Remove the 'S' trap fixing bracket screw and disconnect the 'S' trap. Refer to Frame 68.

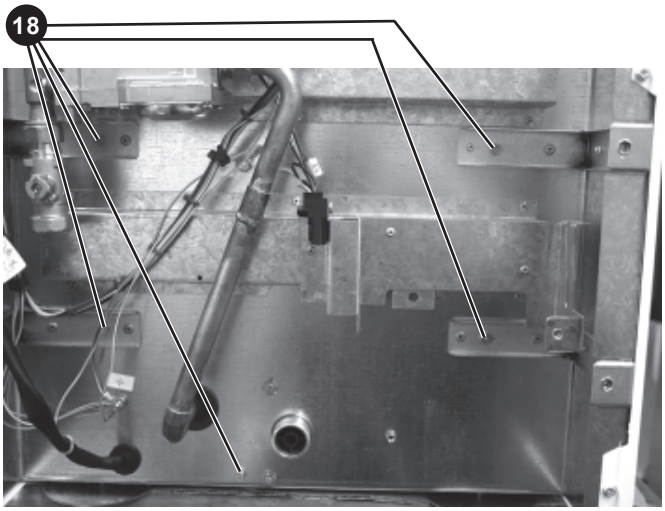

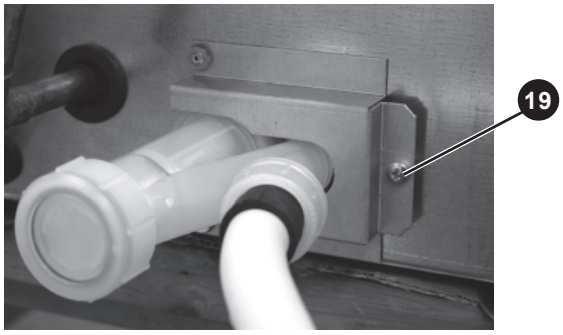

20. Undo the 2 fixing screws from the mounting brackets on the top left and top right of the heat exchanger.

21. Remove gas valve sensing pipe (to prevent damage when removing heat exchanger).

22. Slide the heat exchanger and sump assembly complete with the CH return pipe upwards to disengage the sump spigot from the chassis and remove from the casing.

23. Fit the new heat exchanger, re-assembling in reverse order, replacing the gaskets or seals if any sign of damage or deterioration is evident. To ensure a positive flue seal is confirmed it may be necessary to remove the worktop or adjacent cupboard to view the joint.

24. Check the operation of the boiler. Refer to Frame 52.

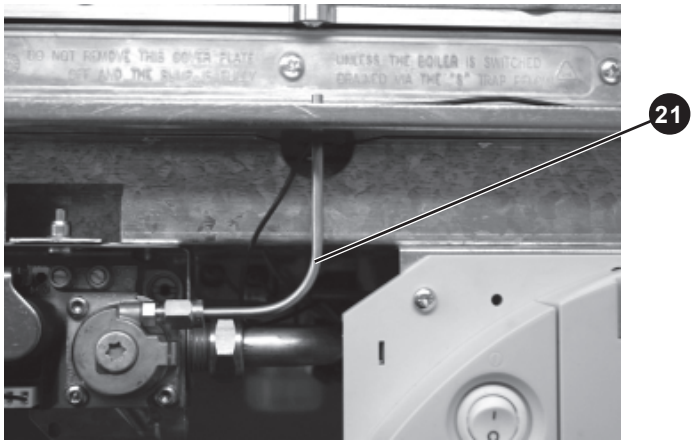

67 BOILER SEALING PANEL SEAL REPLACEMENT

1. Refer Frame 52.
2. Remove the front panel. Refer to Frame 45.
3. Remove the boiler sealing panel. Refer to Frame 46.
4. Remove the old seal from the casing and thoroughly clean the casing surfaces.
5. Fit the new adhesive seals - note that they are supplied to the correct length for the relevant sides.
6. Reassemble in reverse order.

Note.
Ensure that the boiler sealing panel is correctly seated, compressing the seal to make an airtight joint.

7. Check operation of boiler. Refer to Frame 52.

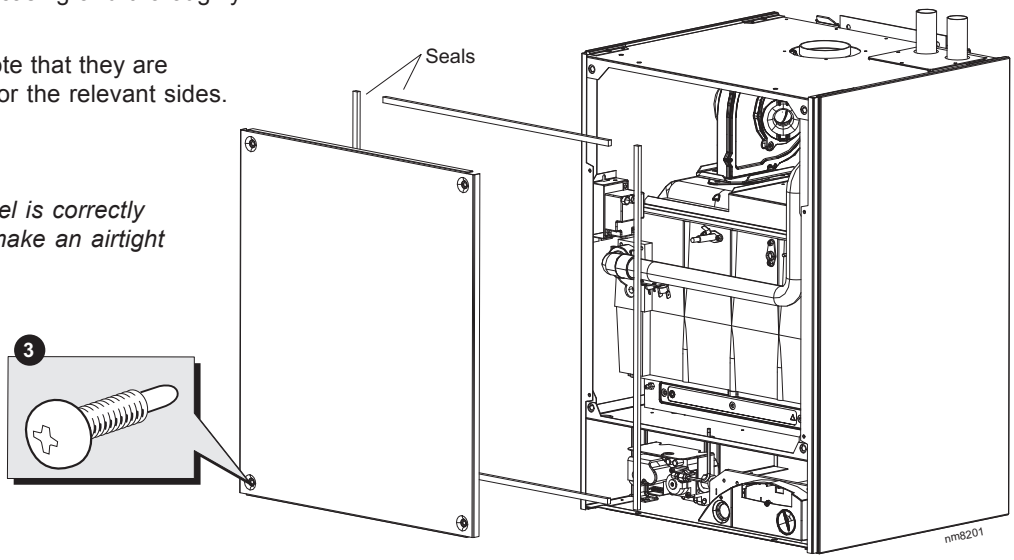

68 CONDENSATE 'S' TRAP REPLACEMENT

1. Refer to Frame 52.
2. Remove the boiler front panel. Refer to Frame 45.
3. Undo the plastic union nut on the condensate 'S' trap outlet and disconnect the flexible hose.
4. Remove the screw retaining the 'S' trap bracket and remove the bracket.
5. Loosen the top nut on the 'S' trap then pull the trap down and forward to remove.
6. Reassemble in reverse order.
7. Check operation of the boiler. Refer to Frame 52.

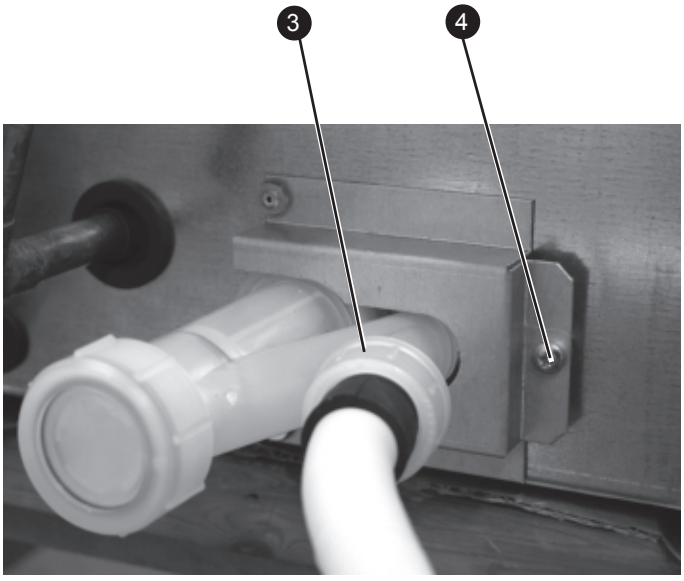

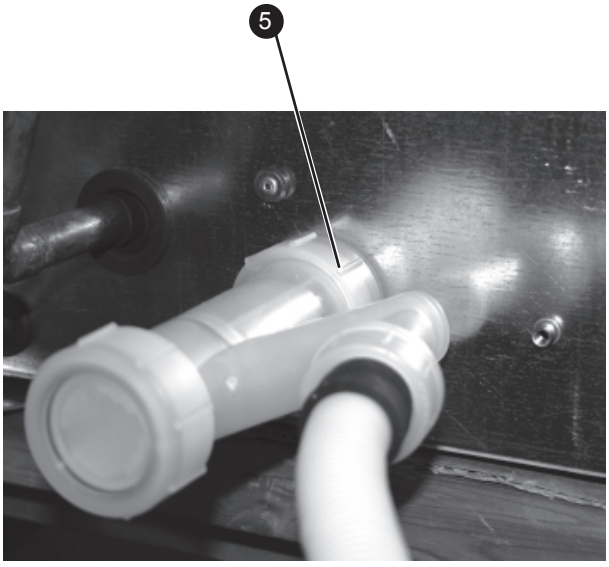

69 FAULT FINDING CHART MAIN MENU

In order to assist fault finding the boiler has an LED diagnostic display. The key to the display codes is as follows:

ALTERNATING 'L' 'F'	GO TO FRAME 70
ALTERNATING 'L' 'E'	GO TO FRAME 71
ALTERNATING 'L' 'A'	GO TO FRAME 72
ALTERNATING 'L' '8'	GO TO FRAME 73
ALTERNATING 'H' '1'	GO TO FRAME 74
ALTERNATING 'H' 'F'	GO TO FRAME 75
ALTERNATING 'H' '4'	GO TO FRAME 76
ALTERNATING 'H' 'n'	GO TO FRAME 77
ALTERNATING 'H' 'E'	GO TO FRAME 71
ALTERNATING 'H9'	GO TO FRAME 76
ALTERNATING 'L9'	GO TO FRAME 76

70 L.....F..... (FLAME ERROR)

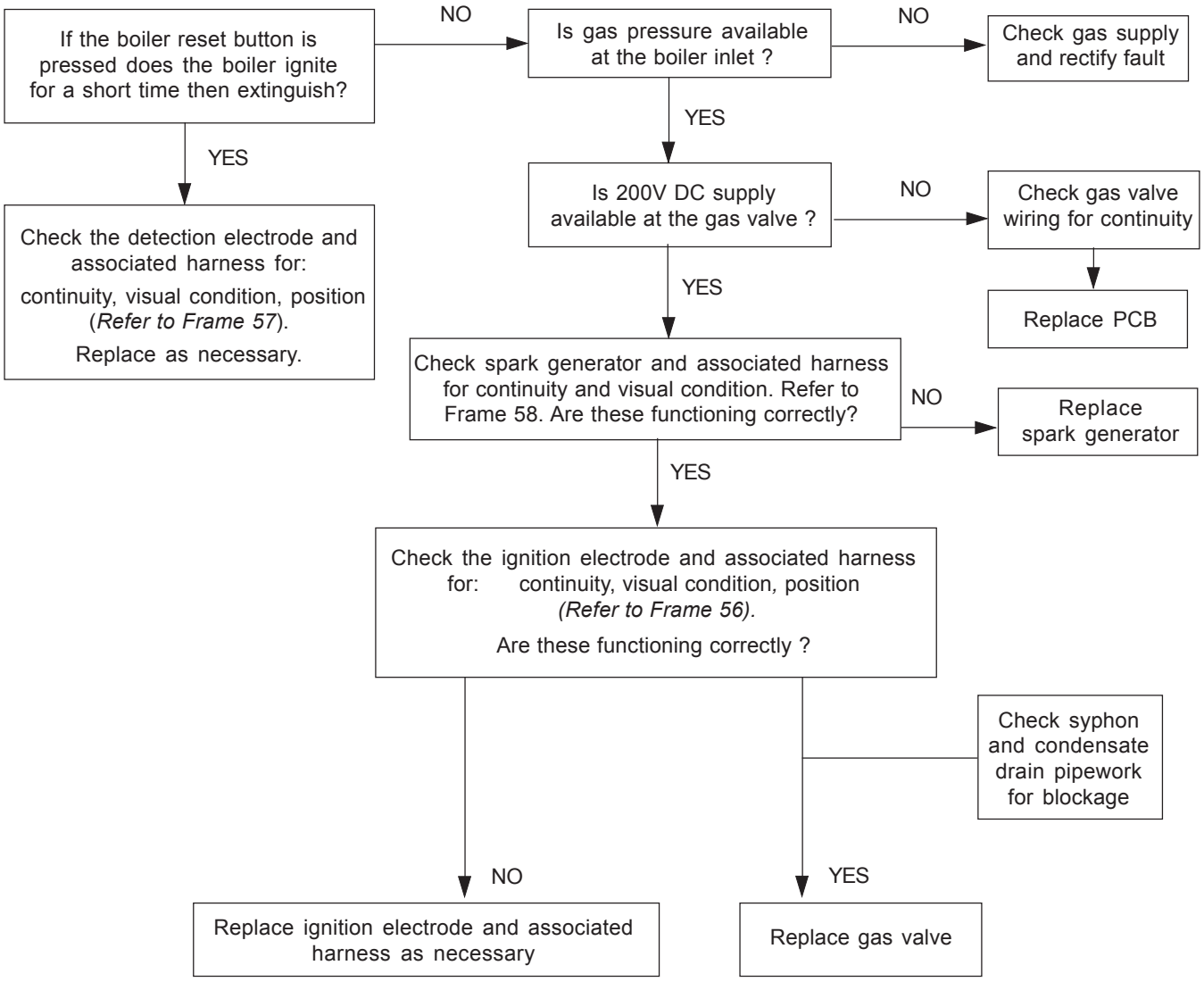

Note. *Due to the wave form of the rectified voltage the reading will vary, depending on the type of meter used to measure the value (some may measure the possible peak voltage of 339V). In general terms, a reading greater than 150V indicates that the correct voltage is supplied to the gas valve.*

71 L.....E..... or H.....E..... (BOARD ERROR)

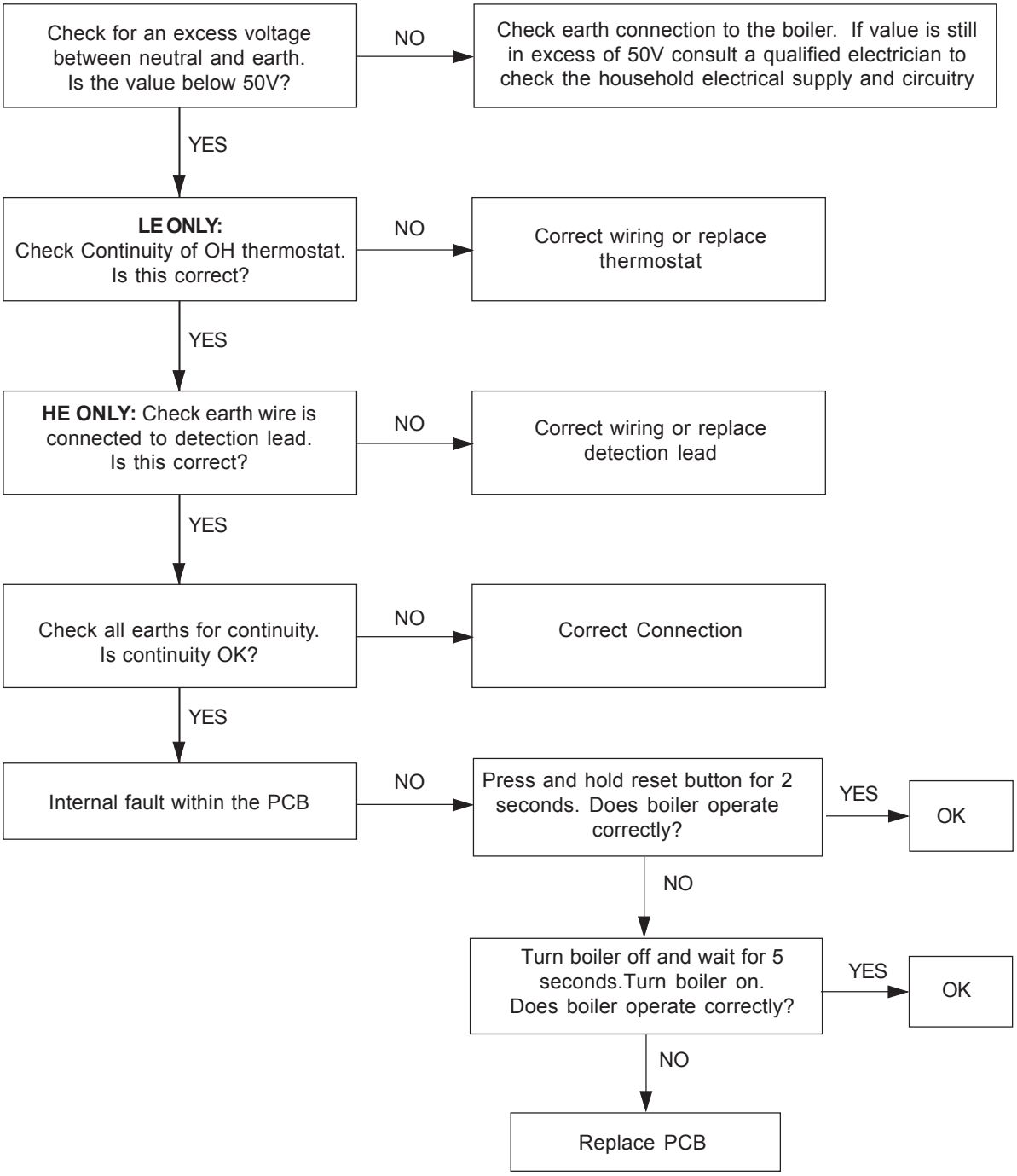

72 L.....A..... (OVERHEAT ERROR)

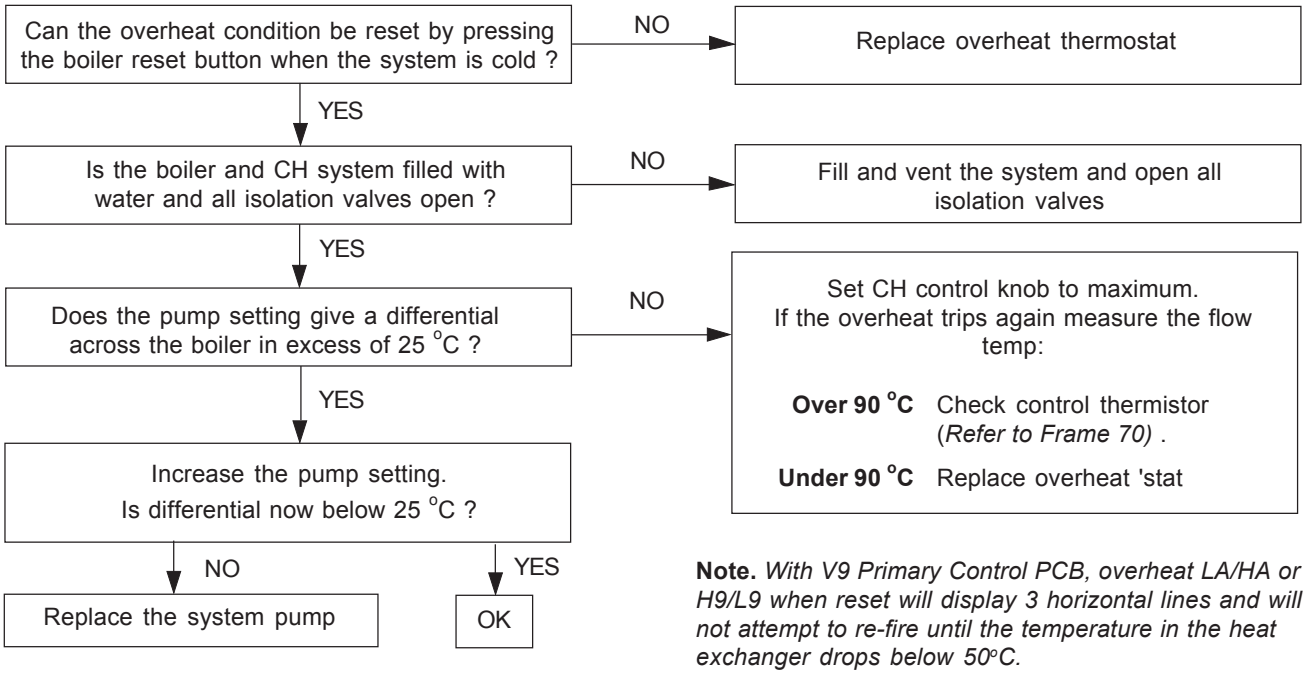

Note. *With V9 Primary Control PCB, overheat LA/HA or H9/L9 when reset will display 3 horizontal lines and will not attempt to re-fire until the temperature in the heat exchanger drops below 50°C.*

73 L....8..... (FAN ERROR)

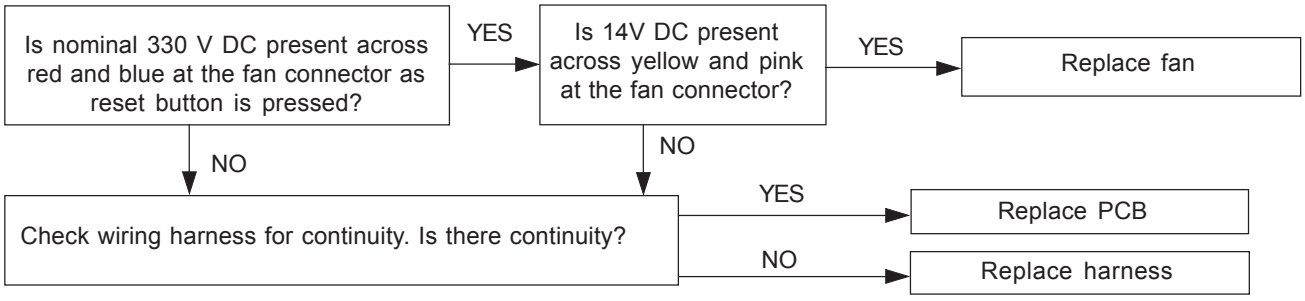

74 H.....1..... (FLOW THERMISTOR ERROR)

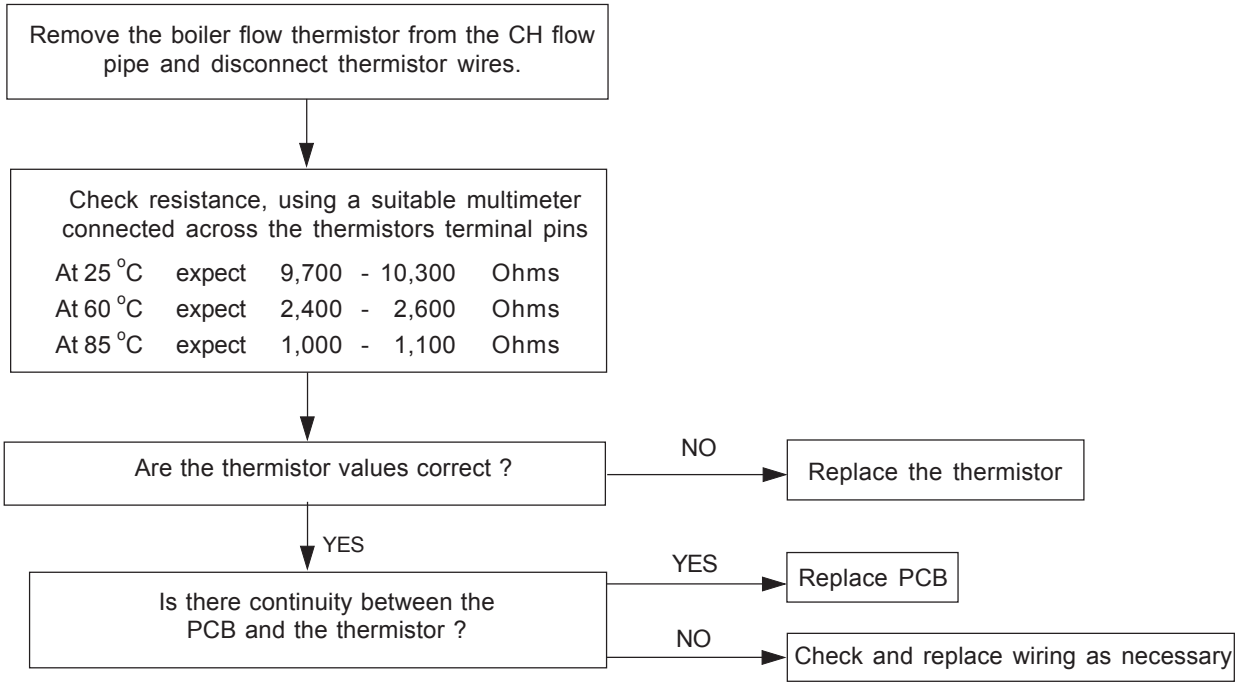

75 H.....F..... (FLAME DETECTION - SHORT CIRCUIT ERROR)

Remove flame detection electrode terminal from PCB.

↓

Is there continuity between the 2 terminal pins ?

NO → Replace PCB.

YES ↓

Replace flame detection electrode

76 H.....4..... (DRY FIRE THERMISTOR ERROR)

Can the fault condition be reset by switching off the mains supply to the boiler ?

NO ↓

Check wiring for continuity from the PCB to the dry fire thermistor

↓

Check resistance, using a suitable multimeter connected across the thermistor terminal pins.

At 25 °C	expect	9,700	-	10,300	Ohms
At 60 °C	expect	2,400	-	2,600	Ohms
At 85 °C	expect	1,000	-	1,100	Ohms

↓

Are thermistor values correct ?

YES ↓ Replace PCB

NO ↓ Replace thermistor

H9/L9 (FLUE GAS OVERHEAT)

Is the system filled and vented and all isolation valves open ?

Is the pump operating correctly? Ensure flow through system.

YES ↓

NO → Fill and vent the system and open all isolating valves

Check resistance, using a suitable multimeter connected across the flue thermistor terminal pins.

At 25 °C	expect	9,700	-	10,300	Ohms
At 60 °C	expect	2,400	-	2,600	Ohms
At 85 °C	expect	1,000	-	1,100	Ohms

↓

Are thermistor values correct ?

YES ↓ Inspect heat exchanger for blockage or damage in the flueways. Clean or replace as necessary

NO ↓ Replace thermistor

Note. *With V9 Primary Control PCB, overheat LA/HA or H9/L9 when reset will display 3 horizontal lines and will not attempt to re-fire until the temperature in the heat exchanger drops below 50°C.*

77 H.....n..... (PHASE REVERSAL ERROR)

Check wiring to the boiler for reversed live and neutral

Foot Note: POLARITY CHECKS

Use a multimeter (set to measure 230 V AC or more), connecting the black lead to a reliable *Earth* point *(not Neutral for this particular test).*

You should find 230 V on terminal L and zero (or a small reading) on terminal N.

N.B. *Some meters may trip residual current devices during this test.*

LIST OF PARTS

The following are parts commonly required due to damage or expendability. Their failure or absence is likely to affect safety or performance of this appliance.

The list is extracted from the British Gas List of Parts, which contains all available spare parts.

The full list is held by British Gas Services, **Ideal Stelrad Group** distributors and merchants.

When ordering spares please quote:

1. Boiler Model
2. Appliance G.C. Number
3. Description
4. Quantity
5. Product Number

When replacing any part on this appliance use only spare parts that you can be assured conform to the safety and performance specification that we require. Do not use reconditioned or copy parts that have not been clearly authorised by Ideal Boilers Limited.

Key No.	GC Part No.	Description	Qty.	Product No.
1	H42-807	Kit - Casing Front (Painted)	1	174 302
2	H42-808	Kit - Panel Case (Sealing)	1	174 303
4	H42-809	Kit - Panel - Side - RH/LH (Painted)	1	174 304
6	H42-810	Kit - Bottom Panel (Painted)	1	174 305
14	H29-002	Kit - Burner	1	174 080
17	E67-492	Kit - Injector & Housing	1	170 908
19	H07-771	Kit - Fan (FIME PX 130/0082)	1	173 525
22	H42-817	Kit - Gas Valve	1	174 306
25	H29-018	Kit - Thermistor - Dry Fire	1	174 087
26	H29-019	Kit - Thermistor - Boiler Control	1	174 088
27	H29-020	Kit - Thermostat - Overheat	1	174 089
28	H07-664	Kit - Electrode - Ignition	1	173 528
29	H07-665	Kit - Electrode - Flame Detection	1	173 529
34	H29-029	Kit - 'S' Trap	1	174 090
36	H29-031	Hose - 'S' Trap	1	174 091
37	H29-032	Kit - User Control	1	174 152
38	H29-034	Kit - PCB - Primary Control V9	1	174 486
39	E67-519	Kit - Fuse - 3.15A - PCB	1	170 931
41	H07-777	Mains Switch c/w Harness	1	173 537
42	H42-861	Kit - Spark Generator	1	174 307
45	H29-047	Kit - Gaskets - Servicing	1	174 096
46	H29-050	Gasket - Burner	1	174 093
54	H29-062	Kit - Earth Pin - Burner	1	174 086
68	H07-790	Lead - Ignition	1	173 510
69	H42-870	Kit - Lead - Detection	1	174 330

SHORT LIST OF PARTS

78 SHORT LIST

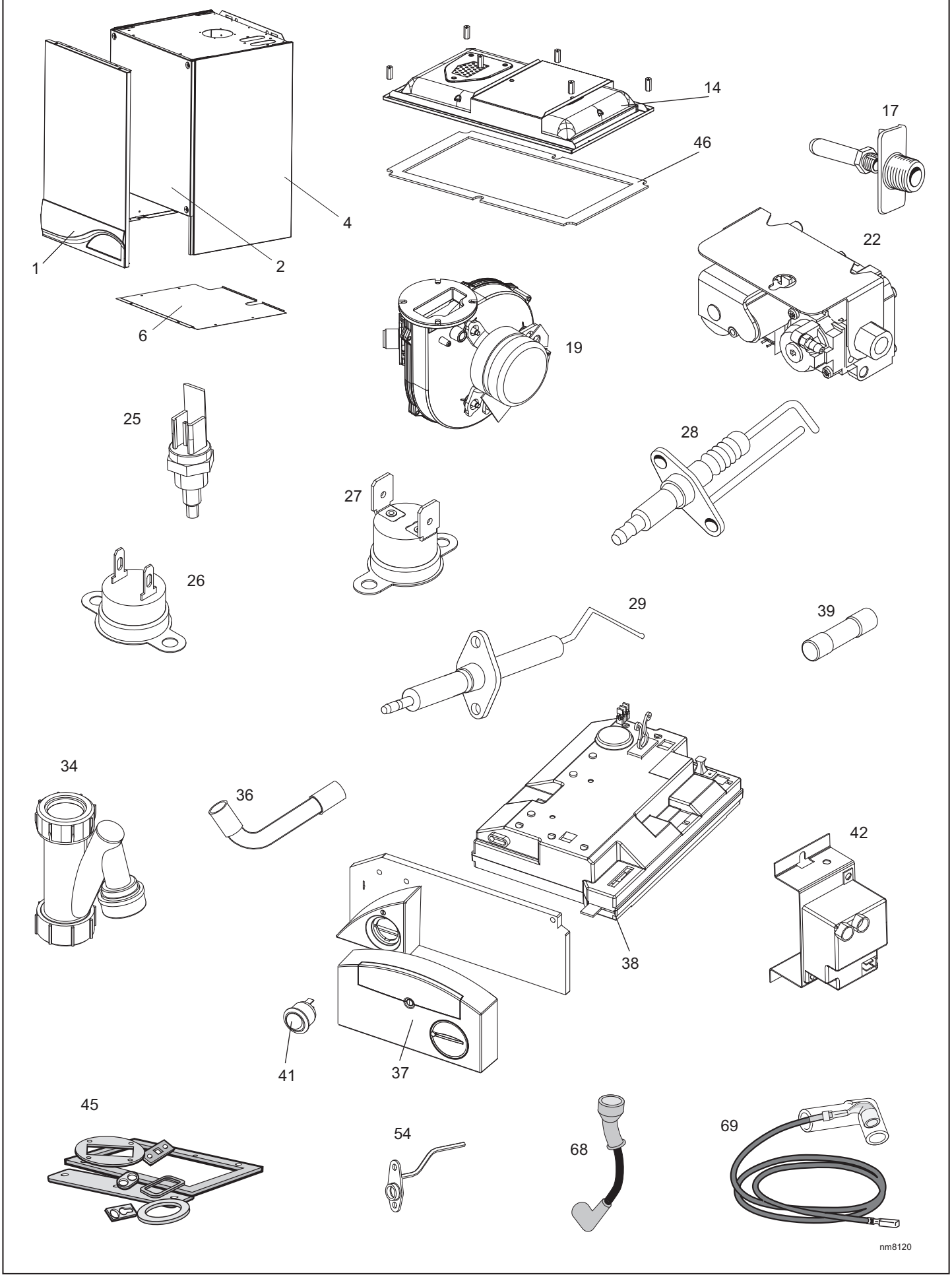

NOTES

NOTES

INSTALLER NOTIFICATION GUIDELINES

IT IS A REQUIREMENT OF CORGI MEMBERSHIP TO REGISTER EVERY GAS APPLIANCE

In addition a change to Building Regulations (England and Wales) requires the installer to notify when installing a heating appliance, as from 1st April 2005.

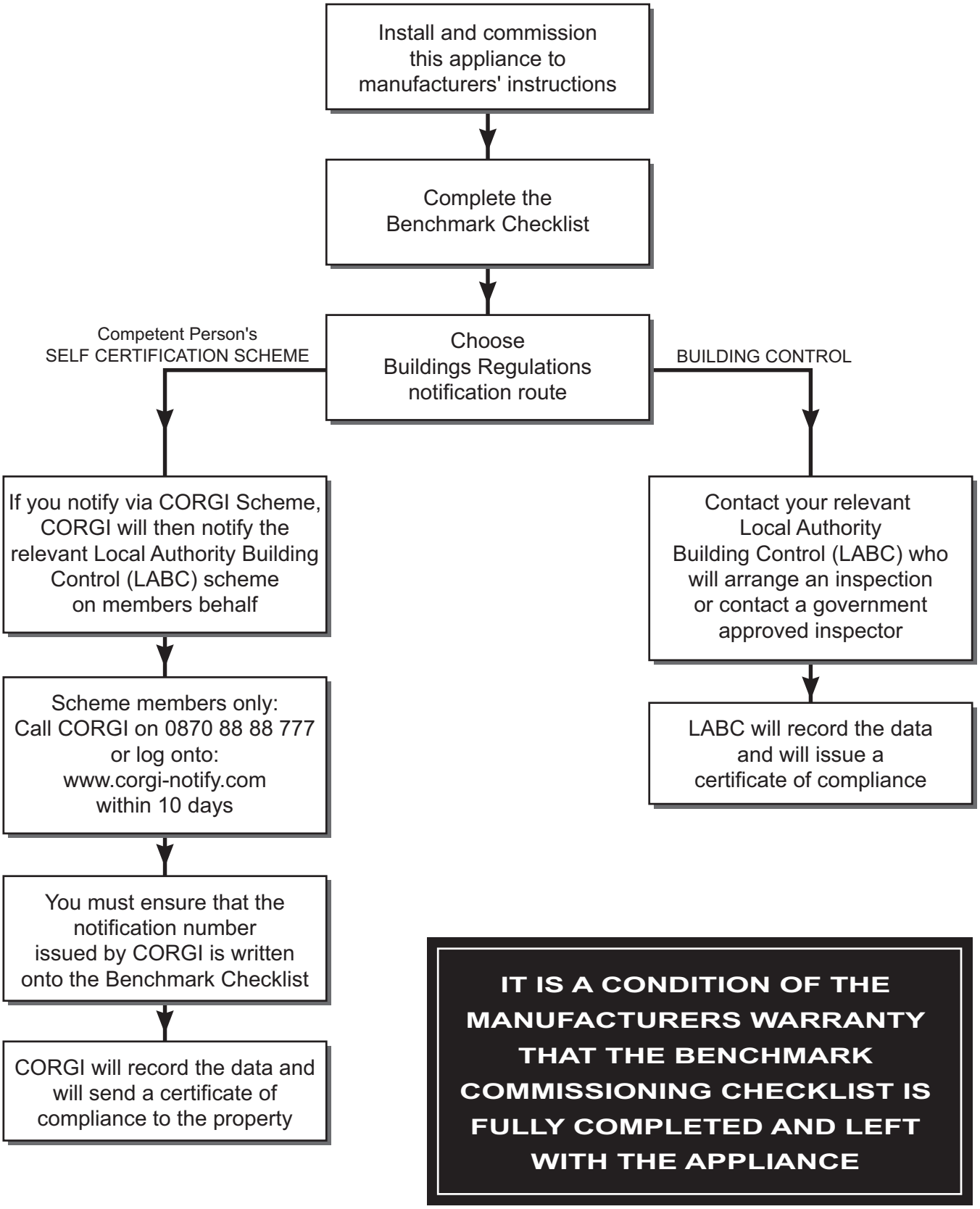

IT IS A CONDITION OF THE MANUFACTURERS WARRANTY THAT THE BENCHMARK COMMISSIONING CHECKLIST IS FULLY COMPLETED AND LEFT WITH THE APPLIANCE

back

BENCHMARK No. | | | | | | | |

benchmark™ COLLECTIVE MARK

GAS BOILER COMMISSIONING CHECKLIST

BOILER SERIAL No. _____ **NOTIFICATION No.** _____

CONTROLS *To comply with the Building Regulations, each section must have a tick in one or other of the boxes*

TIME & TEMPERATURE CONTROL TO HEATING	ROOM T/STAT & PROGRAMMER/TIMER	☐	PROGRAMMABLE ROOMSTAT	☐
TIME & TEMPERATURE CONTROL TO HOT WATER	CYLINDER T/STAT & PROGRAMMER/TIMER	☐	COMBI BOILER	☐
HEATING ZONE VALVES	FITTED	☐	NOT REQUIRED	☐
HOT WATER ZONE VALVES	FITTED	☐	NOT REQUIRED	☐
THERMOSTATIC RADIATOR VALVES	FITTED	☐		
AUTOMATIC BYPASS TO SYSTEM	FITTED	☐	NOT REQUIRED	☐

FOR ALL BOILERS CONFIRM THE FOLLOWING

THE SYSTEM HAS BEEN FLUSHED IN ACCORDANCE WITH THE BOILER MANUFACTURERÕS INSTRUCTIONS? ☐

THE SYSTEM CLEANER USED

THE INHIBITOR USED

FOR THE CENTRAL HEATING MODE, MEASURE & RECORD

GAS RATE		m^3/hr		ft^3/hr
BURNER OPERATING PRESSURE (IF APPLICABLE)	☐	N/A		mbar
CENTRAL HEATING FLOW TEMPERATURE				°C
CENTRAL HEATING RETURN TEMPERATURE				°C

FOR COMBINATION BOILERS ONLY

HAS A WATER SCALE REDUCER BEEN FITTED? YES ☐ NO ☐

WHAT TYPE OF SCALE REDUCER HAS BEEN FITTED?

FOR THE DOMESTIC HOT WATER MODE, MEASURE & RECORD

GAS RATE		m^3/hr		ft^3/hr
MAXIMUM BURNER OPERATING PRESSURE (IF APPLICABLE)	☐	N/A		mbar
COLD WATER INLET TEMPERATURE				°C
HOT WATER OUTLET TEMPERATURE				°C
WATER FLOW RATE				lts/min

FOR CONDENSING BOILERS ONLY CONFIRM THE FOLLOWING

THE CONDENSATE DRAIN HAS BEEN INSTALLED IN ACCORDANCE WITH THE MANUFACTURER'S INSTRUCTIONS? YES ☐

FOR ALL INSTALLATIONS CONFIRM THE FOLLOWING

THE HEATING AND HOT WATER SYSTEM COMPLIES WITH CURRENT BUILDING REGULATIONS ☐

THE APPLIANCE AND ASSOCIATED EQUIPMENT HAS BEEN INSTALLED AND COMMISSIONED IN ACCORDANCE WITH THE MANUFACTURER'S INSTRUCTIONS ☐

IF REQUIRED BY THE MANUFACTURER, HAVE YOU RECORDED A CO/CO_2 RATIO READING? N/A ☐ YES _____ CO/CO_2 RATIO

THE OPERATION OF THE APPLIANCE AND SYSTEM CONTROLS HAVE BEEN DEMONSTRATED TO THE CUSTOMER ☐

THE MANUFACTURER'S LITERATURE HAS BEEN LEFT WITH THE CUSTOMER ☐

COMMISSIONING ENG'S NAME PRINT _____ CORGI ID No. _____

SIGN _____ DATE _____

back

SERVICE INTERVAL RECORD

It is recommended that your heating system is serviced regularly
and that you complete the appropriate Service Interval Record Below.

Service Provider. Before completing the appropriate Service Interval Record below, please ensure you have carried out the service as described in the boiler manufacturer's instructions. Always use the manufacturer's specified spare part when replacing all controls

SERVICE 1 DATE
ENGINEER NAME
COMPANY NAME
TEL No.
CORGI ID CARD SERIAL No.
COMMENTS
SIGNATURE

SERVICE 2 DATE
ENGINEER NAME
COMPANY NAME
TEL No.
CORGI ID CARD SERIAL No.
COMMENTS
SIGNATURE

SERVICE 3 DATE
ENGINEER NAME
COMPANY NAME
TEL No.
CORGI ID CARD SERIAL No.
COMMENTS
SIGNATURE

SERVICE 4 DATE
ENGINEER NAME
COMPANY NAME
TEL No.
CORGI ID CARD SERIAL No.
COMMENTS
SIGNATURE

SERVICE 5 DATE
ENGINEER NAME
COMPANY NAME
TEL No.
CORGI ID CARD SERIAL No.
COMMENTS
SIGNATURE

SERVICE 6 DATE
ENGINEER NAME
COMPANY NAME
TEL No.
CORGI ID CARD SERIAL No.
COMMENTS
SIGNATURE

SERVICE 7 DATE
ENGINEER NAME
COMPANY NAME
TEL No.
CORGI ID CARD SERIAL No.
COMMENTS
SIGNATURE

SERVICE 8 DATE
ENGINEER NAME
COMPANY NAME
TEL No.
CORGI ID CARD SERIAL No.
COMMENTS
SIGNATURE

SERVICE 9 DATE
ENGINEER NAME
COMPANY NAME
TEL No.
CORGI ID CARD SERIAL No.
COMMENTS
SIGNATURE

SERVICE 10 DATE
ENGINEER NAME
COMPANY NAME
TEL No.
CORGI ID CARD SERIAL No.
COMMENTS
SIGNATURE

back

Technical Training

The Ideal Boilers Technical Training Centre offers a series of first class training courses for domestic, commercial and industrial heating installers, engineers and system specifiers.
For details of courses please ring: 01482 498 432

benchmark™

The code of practice for the installation, commissioning & servicing of central heating systems

CERTIFIED PRODUCT
Manufactured under a BS EN ISO 9001: 2000 Quality System accepted by BSI

Ideal Boilers, P.O. Box 103, National Ave, Kingston upon Hull, HU5 4JN. Telephone: 01482 492 251 Fax: 01482 448 858. Registration No. London 322 137.

Ideal Stelrad Group pursues a policy of continuing improvement in the design and performance of its products. The right is therefore reserved to vary specification without notice.

CE

Ideal BOILERS
The High Efficiency Pioneers

Ideal Stelrad Group

Ideal Installer/Technical Helpline: 01482 498 663
www.idealboilers.com