installation and servicing

icos

Your Ideal installation and servicing guide

m3080

When replacing any part on this appliance, use only spare parts that you can be assured conform to the safety and performance specification that we require. Do not use reconditioned or copy parts that have not been clearly authorised by Ideal Boilers.

Ideal BOILERS

ENGINEERED FOR PEACE OF MIND

GENERAL

Table 1 - Boiler Data

Boiler Size			3080
Gas supply type and connection			2H-G20-20 mbar Rc 1/2 (1/2" BSP Female)
Injector size			Stereomatic 5.6mm dia.
Flow connection			22mm copper
Return connection			22mm copper
Flue terminal diameter		mm (in.)	100 (4)
Maximum static water head		m (ft.)	30.5 (100)
Minimum static water head		m (ft.)	0.45 (1.5)
Electrical supply			230 V ~ 50 Hz
Boiler power consumption			38W
Fuse rating			External: 3A Internal: T3.15A L250 V
Water content		litre (gal.)	1.7 (0.37)
Dry weight		kg (lb.)	32 (70)
Boiler size	Height	mm (in.)	582 (23)
	Width	mm (in.)	390 (15)
	Depth	mm (in.)	278 (11)

Table 2 - Performance Data

Boiler Size			**Max**	**Min**
Boiler input 'Q' =	Nett CV	kW	24.4	9.1
		Btu/h	83 300	31 000
	Gross CV	kW	27.1	10.1
		Btu/h	92 500	34 400
Boiler output 'P' =	Gas consumption	l/s (cu.ft/h)	0.70 (89.7)	0.26 (33.3)
	70 °C Mean water temperature	kW	23.4	8.8
		Btu/h	80,000	30,000
	40 °C Mean water temperature	kW	25.1	9.6
		Btu/h	85 700	32 800
Seasonal efficiency (SEDBUK) *		Band A	[90.2]%	
NOx classification			Class 4	

* The value is used in the UK Government's Standard Assessment Procedure (SAP) for energy rating of dwellings. The test data from which it has been calculated have been certified by a notified body.

Note.

Gas consumption is calculated using a calorific value of 38.7 MJ/m³ (1038 Btu/ft³) gross or 34.9 MJ/m³ (935 Btu/ft³) nett. To obtain the gas consumption at a different calorific value:-

a. *For l/s - divide the gross heat input (kW) by the gross C.V. of the gas (MJ/m³)*

b. *For ft³/h - divide the gross heat input (Btu/h) by the gross C.V. of the gas (Btu/ft³)*

Key to symbols

GB = United Kingdom **IE** = Ireland (Countries of destination)

PMS = Maximum operating pressure of water

$\mathbf{C_{13}\,C_{33}\,C_{53}}$ = A room sealed appliance designed for connection via ducts to a horizontal or vertical terminal which admits fresh air to the burner and discharges the products of combustion to the outside through orifices which, in this case, are concentric. The fan is up stream of the combustion chamber.

$\mathbf{I_{2H}}$ = An appliance designed for use on 2nd Family gas, Group H only.

CAUTION. To avoid the possibility of injury during the installation, servicing or cleaning of this appliance, care should be taken when handling edges of sheet steel components.

icos m3080

Natural Gas only

G.C. Appliance No. 41 391 49

PI No. 0063BM3094

Destination Country: GB, IE

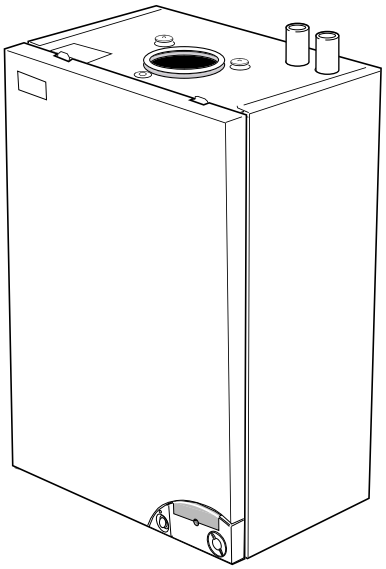

CONTENTS

Air Supply 7
Boiler Clearances 4
Boiler Exploded Diagram 12
Boiler Interlocks 7
Electrical Connections 20
Electrical Supply 7
Electrical Systems Diagrams 21
Extension Ducts - Fitting 17
Fault Finding 37
Flow Wiring Diagram 21
Flue Fitting 14-18
Flue Installation Requirements 6
Gas Safety Regulations ..... 5 & 6
Gas Supply 6
Initial Lighting 23
Installation 12-24
Mandatory Requirements 5
Pump 8
Servicing 25
Short List of Parts 41
Terminal Guards 6
Thermostatic Radiator valves 7
Water and Systems 7
Water Connections ..... 4 & 19
Water Treatment 11
Wiring Diagrams 21

For GB, to comply with Building Regulations Part L1 (Part J in Scotland) the boiler should be fitted in accordance with the manufacturer's instructions. Self-certification that the boiler has been installed to comply with Building Regulations can be demonstrated by completing and signing the Benchmark log book.

BENCHMARK LOG BOOK DETAILS

Boiler	**Page**
Make and model	3
Appliance serial no. on data badge	12
SEDBUK No. %	2
Controls	
Time and temperature control to heating	22
Time and temperature control to hot water	22
Heating zone valves	n/a
TRV's	7
Auto bypass	7
Boiler interlock	7
For all boilers	
Flushing to BS.7593	11
Inhibitor	11
Central heating mode	
Heat input	to be calculated
Burner operating pressure	measure and record
Central heating flow temp.	measure and record
Central heating return temp.	measure and record
For combination boilers only	
Scale reducer	n/a
Hot water mode	
Heat input	n/a
Max. operating burner pressure	n/a
Max. operating water pressure	n/a
Cold water inlet temp	n/a
Hot water outlet temp.	n/a
Water flow rate at max. setting	n/a
For condensing boilers only	
Condensate drain	19

For all boilers: *complete, sign & hand over to customer*

For assistance see Technical Helpline on the back page

NOTE TO THE INSTALLER: LEAVE THESE INSTRUCTIONS ADJACENT TO THE GAS METER. ALSO COMPLETE THE BENCHMARK LOG BOOK AND GIVE THIS TO THE CUSTOMER.

benchmark™

1 BOILER WATER CONNECTIONS

The boiler flow and return pipes are supplied fitted to the boiler ready for top connection

Notes.

a. *For the heating loads in excess of 60,000 Btu/h, 28mm (1") flow and return pipes should be used to and from the boiler.*

b. *This appliance is NOT suitable for use with a direct hot water cylinder.*

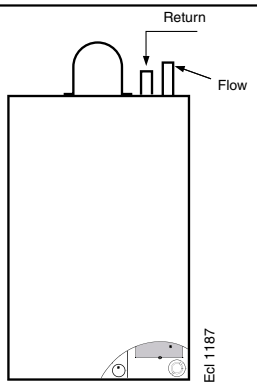

2 BOILER CLEARANCES *all dimensions in mm (in.)*

The following minimum clearances must be maintained for operation and servicing.

Additional space will be required for installation, depending upon site conditions.

Side and Rear Flue

a Provided that the flue hole is cut accurately, e.g. with a core drill, the flue can be installed from inside the building where wall thicknesses do not exceed 600mm (24"). Where the space into which the boiler is going to be installed is less than the length of flue required the flue must be fitted from the outside.

Installation from inside ONLY

b. If a core boring tool is to be used inside the building the space in which the boiler is to be installed must be at least wide enough to accommodate the tool.

SIDE FLUE ONLY	
Horizontal length of flue from centre line of boiler to outside wall	Top clearance required (MIN.) Dim. A
0.5 m	160 mm (6 5/16")
1.0 m	170 mm (6 11/16)
1.5 m	185 mm (7 1/4")
2.0 m	200 mm (7 7/8")
2.5 m	210 mm (8 1/4")
3.0 m	225 mm (8 7/8")
3.5 m	235 mm (9 1/4")
3.5 m	250 mm (10 5/8")
4.5 m	260 mm (10 1/4")
5.0 m	275 mm (10 13/16")
5.5 m	290 mm (11 3/8")
6.0 m	300 mm (11 13/16")

REAR FLUE ONLY
MIN. Top clearance required = 145 mm (5 3/4")

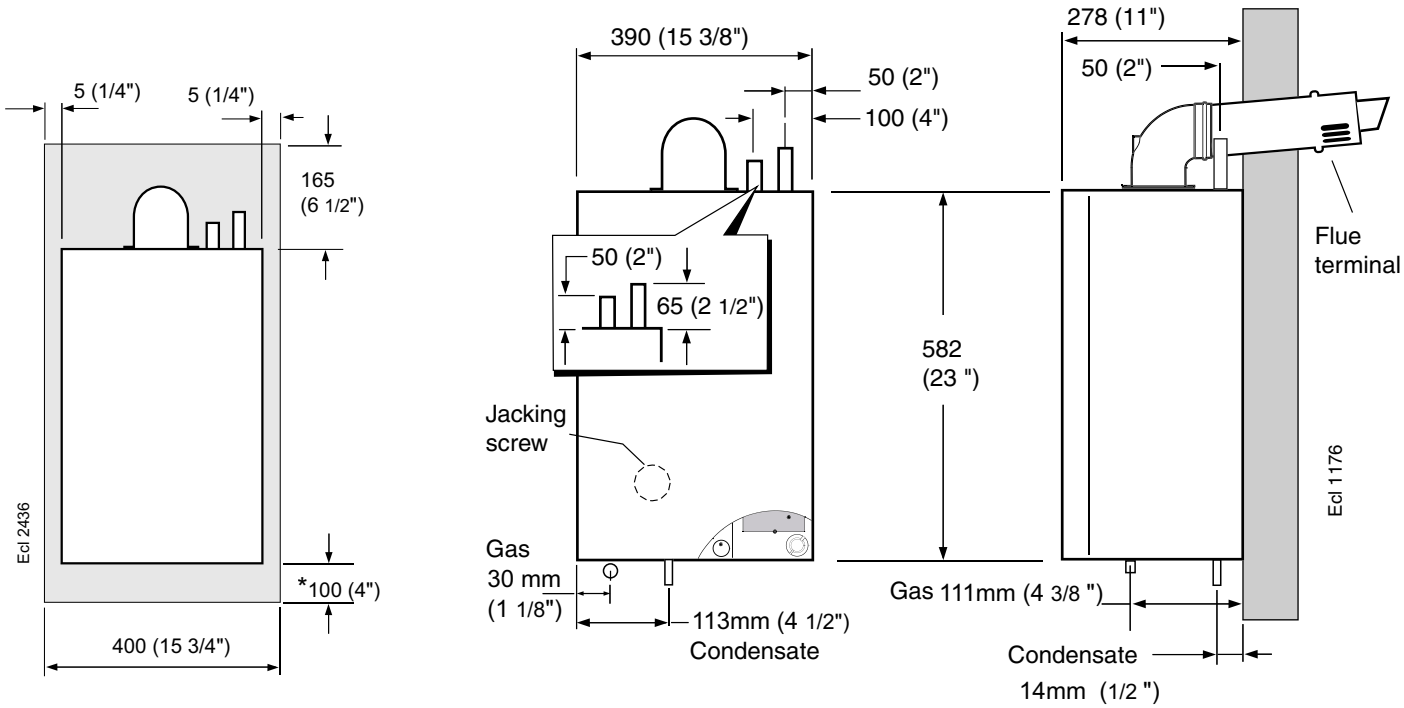

Front clearance
The minimum front clearance when built in to a cupboard is 5mm (1/4") from the cupboard door but 450mm (17 3/4") overall clearance is still required, with the cupboard door open, to allow for servicing.

*** Bottom clearance**
after installation can be reduced to 5mm in an adequately ventilated enclosed cupboard. However, 100mm must be available for servicing.

INTRODUCTION

The icos m3080 is a fully automatically controlled, wall mounted, low water content, balanced flue, fanned, condensing gas boiler. It has full modulating central heating outputs of

8.8 kW (30,000 Btu/h) to 23.4 kW (80,000 Btu/h).

Due to the high efficiency of the boiler a plume of water vapour will form at the flue terminal during operation depending on external conditions.

The boiler casing is of white painted mild steel with the user controls capable of being mounted remotely from the boiler, if the option is required.

The heat exchanger is of cast aluminium.

Note. *These boilers cannot be used on systems which include gravity circulation.*

The boilers are suitable for connection to fully pumped, open vented or sealed water systems. Adequate arrangements for completely draining the system by provision of drain cocks MUST be provided in the installation pipework.

OPERATION

When there is a demand for heat, the heating system is supplied at the selected temperature of between 30°C and 82°C.

The boiler features a comprehensive diagnostic system which gives detailed information on the boiler status when operating, and performance of key components to aid commissioning and fault finding.

OPTIONAL EXTRA KITS

- **Flue Extension Ducts** (1000mm long up to 6m)
- **Flue Finishing Kit**
- **90° Elbow Kit** (maximum 4 elbows per installation).
- **45° Elbow Kit** (maximum 4 elbows per installation).
- **Roof Flue Kit** (to a maximum of 8m)
- **Powered Vertical Flue Kit** (to a maximum primary flue length of 8m + a maximum secondary flue length of 6m)
- **Twin Flueing Kit** (to a maximum of 46m combined total of flue and air ducts)
- **Remote User Control Kit**
- **Boiler Stand-off Kit**
- **Siphon Kit**

SAFETY

Current Gas Safety (Installation and Use) Regulations or rules in force.

The appliance is suitable only for installation in GB and IE and should be installed in accordance with the rules in force.

In GB, the installation must be carried out by a CORGI Registered Installer. It must be carried out in accordance with the relevant requirements of the:

- Gas Safety (Installation and Use) Regulations
- The appropriate Building Regulations either The Building Regulations, The Building Regulations (Scotland), Building Regulations (northern Ireland).
- The Water Fittings Regulations or Water byelaws in Scotland.
- The Current I.E.E. Wiring Regulations.

Where no specific instructions are given, reference should be made to the relevant British Standard Code of Practice.

In IE, the installation must be carried out by a Competent Person and installed in accordance with the current edition of I.S.813 "Domestic Gas Installations", the current Building Regulations and reference should be made to the current ETCI rules for electrical installation.

Detailed recommendations are contained in the following British Standard Codes of Practice:

BS. 5440:1	Flues (for gas appliances of rated input not exceeding 70 kW).
BS. 5440:2	Ventilation (for gas appliances of rated input not exceeding 70 kW).
BS. 5449	Forced circulation hot water systems.
BS. 5546	Installation of gas hot water supplies for domestic purposes (2nd Family Gases).
BS. 6798	Installation of gas fired hot water boilers of rated input not exceeding 70 kW.
BS. 6891	Low pressure installation pipes.

Health & Safety Document No. 635

The Electricity at Work Regulations, 1989.

The manufacturer's notes must NOT be taken, in any way, as overriding statutory obligations.

IMPORTANT. These appliances are CE certificated for safety and performance. It is, therefore, important that no external control devices, e.g. flue dampers, economisers etc., are directly connected to these appliances unless covered by these Installation and Servicing Instructions or as otherwise recommended by **Caradon Ideal Limited** in writing. If in doubt please enquire.

Any direct connection of a control device not approved by **Caradon Ideal Limited** may invalidate the certification and the normal appliance warranty. It could also infringe the Gas Safety Regulations and the above regulations.

SAFE HANDLING OF SUBSTANCES

Care should be taken when handling the boiler insulation panels, which can cause irritation to the skin. No asbestos, mercury or CFCs are included in any part of the boiler or its manufacture.

LOCATION OF BOILER

The boiler must be installed on a flat and vertical wall, capable of adequately supporting the weight of the boiler and any ancillary equipment.

The boiler may be fitted on a combustible wall and insulation between the wall and the boiler is not necessary, unless required by the local authority.

For electrical safety reasons there must be no access from the back of the boiler.

The boiler must not be fitted outside.

Timber Framed Buildings

If the boiler is to be fitted in a timber framed building it should be fitted in accordance with the Institute of Gas Engineering document IGE/UP/7:1998.

Bathroom Installations

This appliance is rated **IP20.**

The boiler may be installed in any room or internal space, although particular attention is drawn to the requirements of the current IEE (BS.7671) Wiring Regulations and, in Scotland, the electrical provisions of the building regulations applicable in Scotland, with respect to the installation of the boiler in a room or internal space containing a bath or shower. For Ireland reference should be made to the current ETCI rules for electrical installations and I.S.813:2002.

If the appliance is to be installed in a room containing a bath or shower then, providing water jets are not going to be used for cleaning purposes (as in communal baths/showers), the appliance can be installed in Zone 3, as detailed in BS.7671.

Compartment Installations

A compartment used to enclose the boiler should be designed and constructed specially for this purpose.
An existing cupboard or compartment may be used, provided that it is modified for the purpose.

In both cases details of essential features of cupboard / compartment design, including airing cupboard installation, are to conform to the following:

- BS. 6798. (No cupboard ventilation is required - see “Air Supply” for details).
- The position selected for installation MUST allow adequate space for servicing in front of the boiler.
- For the minimum clearances required for safety and subsequent service see the wall mounting template and Frame 2. In addition, sufficient space may be required to allow lifting access to the wall mounting plate.

GAS SUPPLY

The local gas supplier should be consulted, at the installation planning stage, in order to establish the availability of an adequate supply of gas. An existing service pipe must NOT be used without prior consultation with the local gas supplier.

The boiler MUST be installed on a gas supply with a governed meter only.

A gas meter can only be connected by the local gas supplier or a CORGI registered engineer. In IE by a Competent Person.

An existing meter should be checked, preferably by the gas supplier, to ensure that the meter is adequate to deal with the rate of gas supply required.

N.B. The principle of the 1:1 gas valve ensures that the **icos m3080** is able to deliver its full output at inlet pressures well below those required by BS. 6891.

IMPORTANT.
Installation pipes MUST be fitted in accordance with BS. 6891. In IE refer to I.S.813:2002. Pipework from the meter to the boiler MUST be of an adequate size, i.e. no longer than 20m and not less than 15mm O.D.

The complete installation MUST be tested for gas soundness and purged as described in the above code.

FLUE INSTALLATION

Pluming will occur at the terminal so terminal positions which would cause a nuisance should be avoided.

The flue must be installed in accordance with the recommendations of BS.5440-1:2000. In IE refer to I.S.813:2002.

The following notes are intended for general guidance.

1. The boiler MUST be installed so that the terminal is exposed to external air.
2. It is important that the position of the terminal allows the free passage of air across it at all times.
3. Minimum acceptable spacing from the terminal to obstructions and ventilation openings are specified in Table 3.

Table 3 - Balanced flue terminal position

Terminal Position	Minimum Spacing
1. Directly below or alongside an opening window, air brick or other ventilation opening	300 mm (12")
2. Below guttering, drain pipes or soil pipes	75 mm (3")
3. Below eaves	200 mm (8")
4. Below balconies or a car port roof	200 mm (8")
5. From vertical drain pipes or soil pipes	150 mm (6")
6. From an internal or external corner or to a boundary alongside the terminal	300 mm (12")
7. Above adjacent ground, roof or balcony level	300 mm (12")
8. From a surface or a boundary facing the terminal	600 mm (24")
9. From a terminal facing a terminal	1200 mm (48")
10. From an opening in a car port (e.g. door or window) into dwelling	1200 mm (48")
11. Vertically from a terminal on the same wall	1500 mm (60")
12. Horizontally from a terminal on the wall	300 mm (12")

4. Where the lowest part of the terminal is fitted less than 2m (6'6") above a balcony, above ground or above a flat roof to which people have access, then the terminal MUST be protected by a purpose designed guard.

   Terminal guards are available from boiler suppliers. Ask for TFC Flue Guard Model No. K6 (round plastic-coated). In case of difficulty contact:

   Grasslin (UK) Ltd., Tower House, Vale Rise, Tonbridge, Kent TN9 1TB
   Tel: +44 (0) 1732 359 888. Fax: +44 (0) 1732 354 445
   www.tfc-group.co.uk

   Ensure that the guard is fitted centrally.
5. The flue assembly shall be so placed or shielded as to prevent ignition or damage to any part of any building.

6. The air inlet/products outlet duct and the terminal of the boiler MUST NOT be closer than 25mm (1") to combustible material. Detailed recommendations on the protection of combustible material are given in BS.5440-1:2000. In IE refer to I.S.813:2002.

IMPORTANT.
It is absolutely ESSENTIAL to ensure, in practice, that products of combustion discharging from the terminal cannot re-enter the building or any other adjacent building through ventilators, windows, doors, other sources of natural air infiltration, or forced ventilation / air conditioning.

If this should occur the appliance MUST be turned OFF, labelled as 'unsafe' until corrective action can be taken.

TERMINAL

The terminal assembly can be adapted to accommodate various wall thicknesses. Refer to Frame 14.

AIR SUPPLY

It is NOT necessary to have a purpose-provided air vent in the room or internal space in which the boiler is installed. Neither is it necessary to ventilate a cupboard or compartment in which the boiler is installed, due to the low surface temperatures of the boiler casing during operation; therefore the requirements of BS 6798, Clause 12, and BS 5440:2 may be disregarded. In IE the requirements of I.S.813:2002 may be disregarded

WATER CIRCULATION SYSTEM

IMPORTANT.
A minimum length of 1 metre of copper pipe MUST be fitted to both flow and return connections from the boiler before connection to any plastic piping.

For the types of system and correct piping procedure see Frames 1, and 3 to 8.

The central heating system should be in accordance with BS.6798 and, in addition, for smallbore and microbore systems, BS.5449.

WATER TREATMENT - see Frame 9

The hot water storage cylinder MUST be of the indirect type and should preferably be manufactured of copper.

Graph 1 - Water flow rate and pressure loss

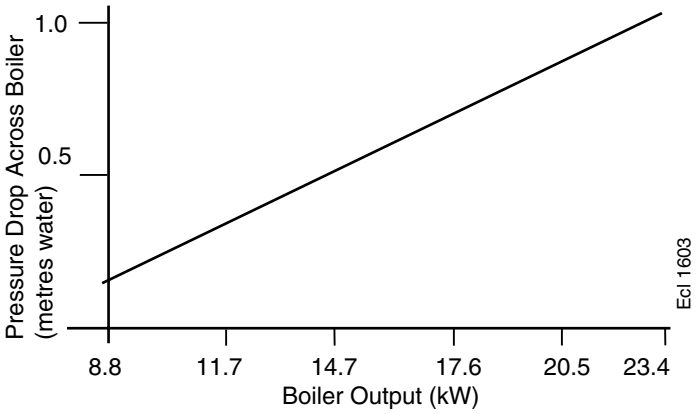

Single feed, indirect cylinders are not recommended and MUST NOT be used on sealed systems.

The appliances are NOT suitable for gravity central heating nor are they suitable for the provision of gravity domestic hot water.

The hot water cylinder and ancillary pipework, not forming part of the useful heating surface, should be lagged to prevent heat loss and any possible freezing - particularly where pipes run through roof spaces and ventilated underfloor spaces.

The boiler must be vented.

The hydraulic resistance of the boilers, at MAXIMUM OUTPUT, with an 11 °C (20 °F) temperature differential, is shown in Graph 1.

BOILER CONTROL INTERLOCKS

Caradon Ideal Limited recommend that heating systems utilising full thermostatic radiator valve control of temperature in individual rooms should also be fitted with a room thermostat controlling the temperature in a space served by radiators not fitted with such a valve as stated in BS. 5449.

When thermostatic radiator valves are used, the space heating temperature control over a living area having a heating requirement of at least 0.9kW (3,000 btu/h) of the boiler heat output should be achieved using a room thermostat whilst other rooms are individually controlled by thermostatic radiator valves. A higher proportion of TRVs may be used, provided that a bypass between the boiler flow and return is fitted, to ensure adequate flow when all TRVs are closed.

For further information refer to the 'Good Practice Guide 143', publication of the Energy Efficiency Office, available from the Building Research Establishment, Garston, Watford WD2 7JR. Tel: +44 (0) 1923 664 258

ELECTRICAL SUPPLY

WARNING. The appliance MUST be earthed.

Wiring external to the appliance MUST be in accordance with the current I.E.E. (BS.7671) Wiring Regulations and any local regualtions which apply. For Ireland reference should be made to the current ETCI rules for electrical installations.

The point of connection to the mains should be readily accessible and adjacent to the boiler.

CONDENSATE DRAIN - Refer to Frames 27 & 42

A condensate drain is provided on the boiler. This drain must be connected to a drainage point. All pipework and fittings in the condensate drainage system MUST be made of plastic - *no other materials may be used.*

IMPORTANT.

Any external runs must be insulated.

The drain outlet on the boiler is standard 21.5mm (3/4”) overflow pipe.

3 OPEN VENT SYSTEM REQUIREMENTS

The system should be vented directly off the boiler flow pipe, as close to the boiler as possible. The cold feed entry should be inverted and MUST be positioned between the pump and the vent, and not more than 150mm (6") away from the vent connection.

Note. *Combined feed and vent pipes may also be fitted.*

There should be a minimum height 450mm (18") of open vent above the cistern water level. If this is not possible refer to Frame 5**.** The vertical distance between the highest point of the system and the feed/expansion cistern water level MUST not be less than 450 mm (18"). The pump must be fitted on the flow side of the boiler.

A suitable pump is a domestic circulator capable of providing a maximum 11°C (20°F) temperature differential across the boiler with the whole of the heating circuit open (e.g. Grundfos UPS 15/50, 15/60 or equivalent). With the minimum flow circuit allowed by the controls the differential must not exceed 25 °C.

The vertical distance between the pump and feed/expansion cistern MUST comply with the pump manufacturer's minimum requirements, to avoid cavitation. Should these conditions not apply either lower the pump position or raise the cistern above the minimum requirement specified by **Caradon Ideal Limited.** The isolation valves should be fitted as close to the pump as possible.

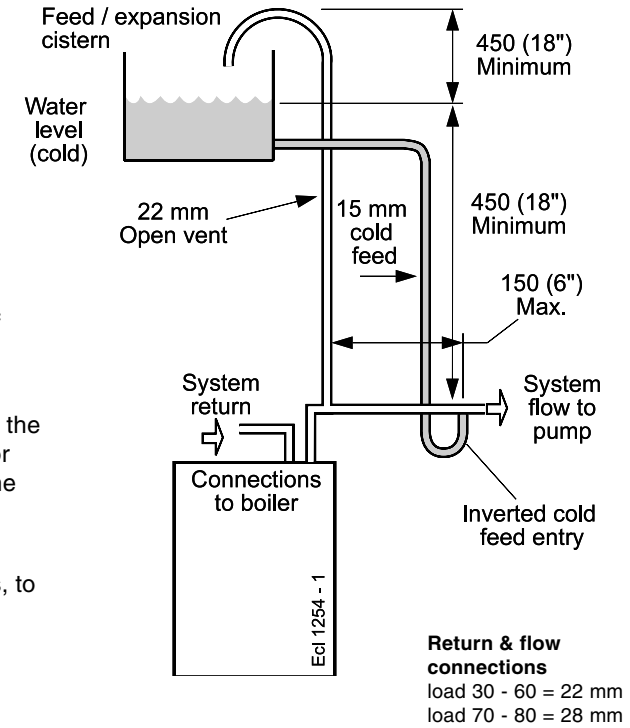

4 SCHEMATIC PIPEWORK AND SYSTEM BALANCING

The boiler does not normally need a bypass but at least some radiators on the heating circuit, of load at least 10% of the minimum boiler output, must be provided with twin lockshield valves so that this minimum heating load is always available (see footnote re. thermostatic radiator valves).

Balancing

1. Set the programmer to ON for both CH and HW. Turn the cylinder thermostat down. Close the manual or thermostatic valves on all radiators, leaving the twin lockshield valves (on the radiators referred to above) in the open position. Turn up the room thermostat and adjust these lockshield valves to give boiler flow and return temperatures not more than 20 °C apart. These valves should now be left as set.
2. Open all manual or thermostatic radiator valves and adjust the lockshield valves on remaining radiators to give around 11°C temperature drop at each radiator.
3. Turn up the cylinder thermostat and adjust the cylinder balancing valve so that the cylinder achieves a maximum flow consistent with adequate flow to the radiators. Check that with only the domestic hot water loop in circuit a differential temperature of 20 °C across the boiler is not exceeded.
4. Adjust room and cylinder thermostats and programmer to NORMAL settings.

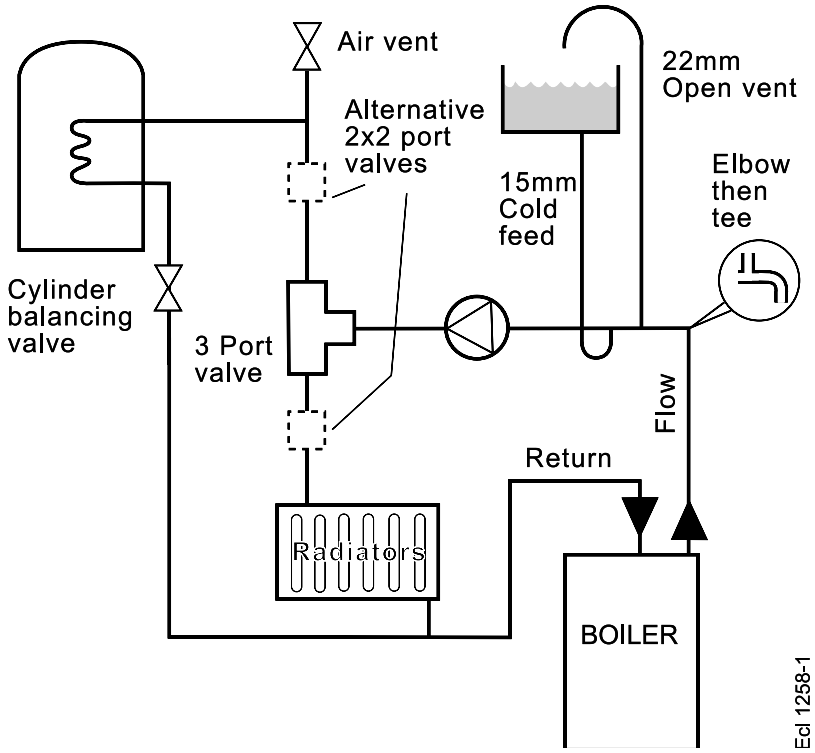

5 LOW HEAD AND LARGE SYSTEMS WITH EXTENSIVE PIPE RUNS - OPEN VENT

This arrangement is useful for large systems where radiators at the extremities are difficult to vent. This can lead to pumping over with conventional feed and vent arrangements.

The following conditions MUST be observed:

1. The top of the automatic air vent must be below the cold water level.
2. The static water level (cold) must be at least 200mm above the top of the horizontal flow pipe, fitted as shown. The vent connection MUST NOT be made immediately off the top of the boiler as venting is made less efficient.
3. The maximum practical length of 22mm cold feed pipe should be used in order to reduce the effective volume of hot system water expanding into the feed/expansion cistern to a minimum.

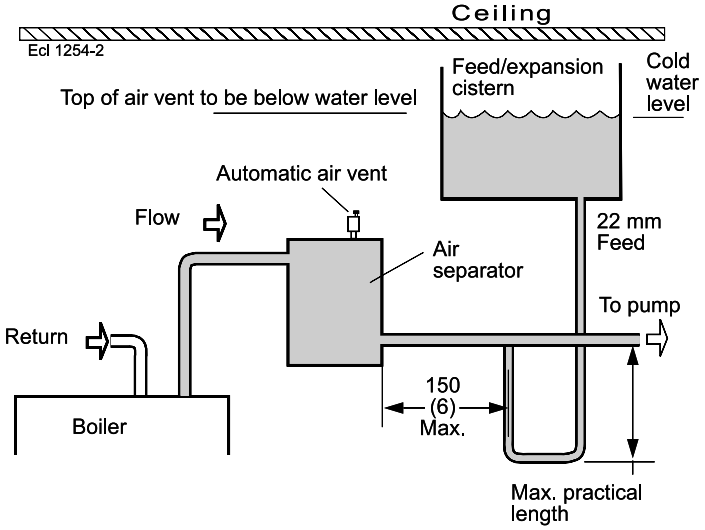

All dimensions in mm (in.).
NB. Imperial dimensions are approximate

Note. *The pump manufacturers' minimum requirements must be complied with.*

6 SEALED SYSTEM REQUIREMENTS

Notes.

a. *The method of filling, refilling, topping up or flushing sealed primary hot water circuit from the mains via a temporary hose connection is only allowed if acceptable to the local water authority.*

b. *When installing the filling device, it must be connected as shown to fully comply with the water regulations. This may involve the fitting of an additional WRAS approval isolator valve to the mains supply.*

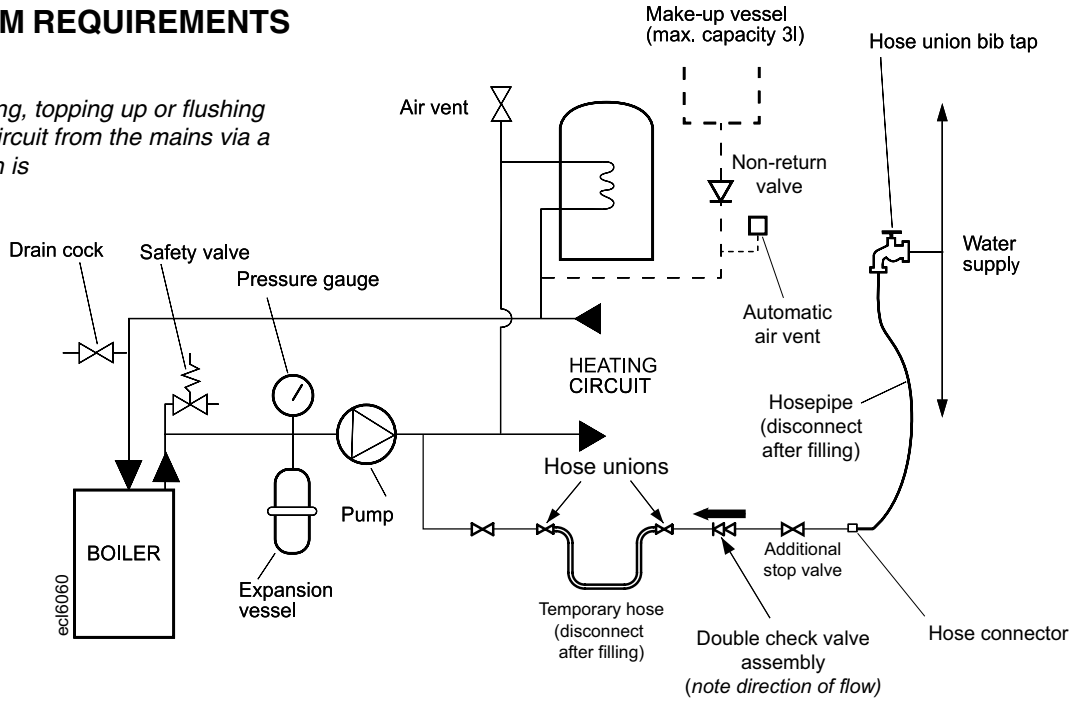

1. General

a. The installation must comply with the requirements of BS. 6798 and BS. 5449.

b. The installation should be designed to work with flow temperatures of up to 82 °C.

c. All components of the system, including the heat exchanger of the indirect cylinder, must be suitable for a working pressure of 3 bar (45lb/in^2) and temperature of 110°C. Care should be taken in making all connections so that the risk of leakage is minimised.

2. Safety Valve

A spring loaded safety valve complying with the relevant requirements of BS. 6759 must be fitted in the flow pipe as close to the boiler as possible and with no intervening valve or restriction. The valve should have the following features:

a. A non-adjustable preset lift pressure not exceeding 3bar (45lb/in^2).

b. A manual testing device.

c. Provision for connection of a discharge pipe. *The valve or discharge pipe should be positioned so that the discharge of water or steam cannot create a hazard to the occupants of the premises or cause damage to electrical components and wiring.*

3. Pressure Gauge

A pressure gauge covering at least the range 0-4 bar (0-60 lb/in^2) must be fitted to the system. The gauge should be easily seen from the filling point and should preferably be connected at the same point as the expansion vessel.

7 SEALED SYSTEM REQUIREMENTS - continued

4. Expansion Vessel

a. A diaphragm type expansion vessel must be connected to a point close to the inlet side of the pump, the connecting pipe being not less than 15 mm (1/2" nominal) size and not incorporating valves of any sort.

b. The vessel capacity must be adequate to accept the expansion of the system water when heated to 110°C (230°F).

c. The charge pressure must not be less than the static water head above the vessel. The pressure attained in the system when heated to 110° C (230° F) should be at least 0.35 bar (5 lb/in^2) less than the lift pressure of the safety valve.
For guidance on vessel sizing refer to the table in Frame 8.

For further details refer to BS. 5449, BS. 7074:1 and the British Gas Corporation publication 'Material and Installation Specifications for Domestic Central Heating and Hot Water'. For IE refer to the current edition of I.S.813.

5. Cylinder

The cylinder must be either of the indirect coil type or a direct cylinder fitted with an immersion calorifier which is suitable for operating on a gauge pressure of 0.35 bar (5 lb/in^2) in excess of the safety valve setting. Single feed indirect cylinders are not suitable for sealed systems.

6. Make-up Water

Provision must be made for replacing water loss from the system, either:

a. From a manually filled make-up vessel with a readily visible water level. The vessel should be mounted at least 150 mm (6") above the highest point of the system, and be connected through a non-return valve to the system, fitted at least 300 mm (12") below the make-up vessel on the return side of the domestic hot water cylinder or radiators.

or

b. Where access to a make-up vessel would be difficult by pre-pressurisation of the system. Refer to 'Filling', below.

7. Mains Connection

There must be no direct connection to the mains water supply or to the water storage tank supplying domestic water, even through a non-return valve, without the approval of the local water authority.

8. Filling

The system may be filled by one of the following methods:

a. Through a cistern, used for no other purposes, via a ball valve permanently connected directly to a service pipe and/or a cold water distributing pipe.

The static head available from the cistern should be adequate to provide the desired initial system design pressure. The cold feed pipe from the cistern should include a non-return valve and a stop valve with an automatic air vent connected between them, the stop valve being located between the system and the automatic air vent. The stop valve may remain open during normal operation of the system if automatic water make-up is required.

b. Through a self-contained unit comprising a cistern, pressure booster pump (if required) and, if necessary, an automatic pressure reducing valve and flow restrictor. The cistern should be supplied through a temporary connection from a service pipe or cold water distributing pipe.
This unit may remain permanently connected to the heating system to provide limited automatic water make-up. Where the temporary connection is supplied from a service pipe or distributing pipe which also supplies other draw-off points at a lower level then a double check valve shall be installed upstream of the draw-off point.

c. Through a temporary hose connection from a draw-off tap supplied from a service pipe under mains pressure. Where the mains pressure is excessive a pressure reducing valve shall be used to facilitate filling.

The following fittings shall form a permanent part of the system and shall be fitted in the order stated:

A stop valve complying with the requirements of BS. 1010, Part 2 (the hose from the draw-off tap shall be connected to this fitting).
A test cock.
A double check valve of an approved type.

- Thoroughly flush out the whole of the system with cold water, without the pump in position.
- With the pump fitted, fill and vent the system until the pressure gauge registers 1.5 bar (21.5lb/in^2). Examine for leaks.
- Check the operation of the safety valve by manually raising the water pressure until the valve lifts. This should occur within ± 0.3 bar (± 4.3lb/in^2) of the preset lift pressure.
- Release water from the system until the initial system design pressure is reached.
- Light the boiler and heat the system to the maximum working temperature. Examine for leaks.
- Turn off the boiler and drain the system while still hot.
- Refill and vent the system.
- Adjust the initial pressure to the required value.

Sizing procedure for expansion vessels: The volume of the expansion vessel (litres) fitted to a sealed system shall not be less than that given by the table on the following page, multiplied by a factor of 0.8 (for flow temperatures of less than 83 °C).

8 SEALED SYSTEM REQUIREMENTS - continued

Safety valve setting	3.0 bar			2.5 bar			2.0 bar	
Vessel charge and initial system pressure	0.5 bar	1.0 bar	1.5 bar	0.5 bar	1.0 bar	1.5 bar	0.5 bar	1.0 bar
Total water content of system litres	Expansion vessel volume litres							
25	2.1	2.7	3.9	2.3	3.3	5.9	2.8	5.0
50	4.2	5.4	7.8	4.7	6.7	11.8	5.6	10.0
75	6.3	8.2	11.7	7.0	10.0	17.7	8.4	15.0
100	8.3	10.9	15.6	9.4	13.4	23.7	11.3	20.0
125	10.4	13.6	19.5	11.7	16.7	29.6	14.1	25.0
150	12.5	16.3	23.4	14.1	20.1	35.5	16.9	30.0
175	14.6	19.1	27.3	16.4	23.4	41.4	19.7	35.0
200	16.7	21.8	31.2	18.8	26.8	47.4	22.6	40.0
225	18.7	24.5	35.1	21.1	30.1	53.3	25.4	45.0
250	20.8	27.2	39.0	23.5	33.5	59.2	28.2	50.0
275	22.9	30.0	42.9	25.8	36.8	65.1	31.0	55.0
300	25.0	32.7	46.8	28.2	40.2	71.1	33.9	60.0
Multiplying factors for other system volumes	0.0833	0.109	0.156	0.094	0.134	0.237	0.113	0.20

9 WATER TREATMENT

These boilers incorporate an ALUMINIUM heat exchanger.

IMPORTANT. The application of any other treatment to this product may render the guarantee of **Caradon Ideal Limited** INVALID.

Caradon Ideal Limited recommend Water Treatment in accordance with the *Benchmark* Guidance Notes on Water Treatment in Central Heating Systems.

Caradon Ideal Limited recommend the use of Fernox Copal or MB1, GE Betz Sentinel X100 or Salamander Corrosion Guard inhibitors and associated water treatment products, which must be used in accordance with the manufacturers instructions.

For further information contact:

Fernox Manufacturing Co. Ltd, Cookson Electronics, Forsyth Road, Sheerwater, Woking, Surrey. GU21 5RZ. Tel. +44 (0) 1799 521133
or
G E Betz Ltd, Sentinel Division, Foundry Lane, Widnes, Cheshire, WA8 8UD. Tel. +44 (0) 151 424 5351
or
Salamander Engineering Ltd, Unit 24, Reddicap Trading Estate, Sutton Coldfield, West Midlands B75 7BU. Tel. +44 (0) 121 378 0952

Notes.

1. *It is most important that the correct concentration of the water treatment products is maintained in accordance with the manufacturers' instructions.*
2. *If the boiler is installed in an existing system any unsuitable additives MUST be removed by thorough cleansing. BS7593:1992 details the steps necessary to clean a domestic heating system.*
3. *In hard water areas, treatment to prevent limescale may be necessary - however the use of artificially softened water is NOT permitted.*
4. *Under no circumstances should the boiler be fired before the system has been thoroughly flushed.*

10 BOILER ASSEMBLY - Exploded view

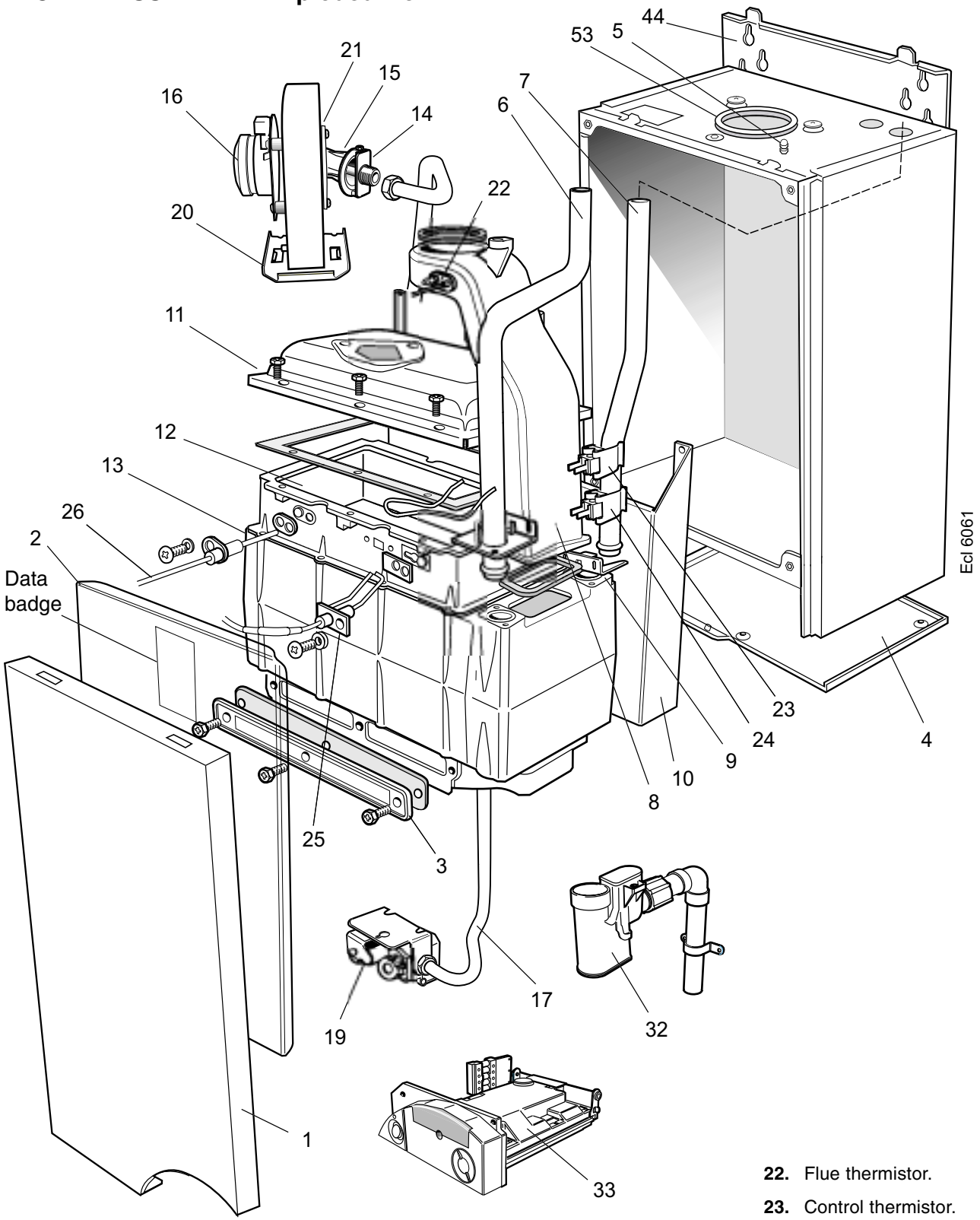

LEGEND

1. Front casing panel.
2. Sealing panel
3. Sump cover plate.
4. Bottom casing panel.
5. Flue sensing nipple.
6. Return pipe.
7. Flow pipe.
8. Flue manifold.
9. Flue fixing
10. Interpanel.
11. Burner assy.
12. Combustion chamber Insulation.
13. Heat exchanger
14. Injector & housing
15. Venturi assy.
16. Fan assy.
17. Gas pipe assy.
19. Gas control valve assy.
20. Fan bracket assy.
21. Orifice plate.
22. Flue thermistor.
23. Control thermistor.
24. Overheat thermostat.
25. Ignition electrode.
26. Flame detection electrode.
32. 'S' trap
33. Control assy.
44. Wall mounting plate.
53. Turret gasket.

11 UNPACKING

The boiler is supplied fully assembled in one Pack A, together with a standard flue assembly for lengths up to 650mm, rear or side flue outlet, in Pack B.

Unpack and check the contents.

Pack A Contents

- Hardware Pack (listed below).
- These Installation & Servicing Instructions.
- The User's Instructions.
- The User's controls (display unit).
- Benchmark Log book.
- 1 Year guarantee card.

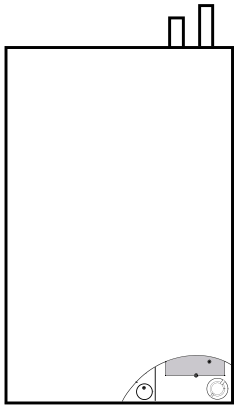

Complete boiler

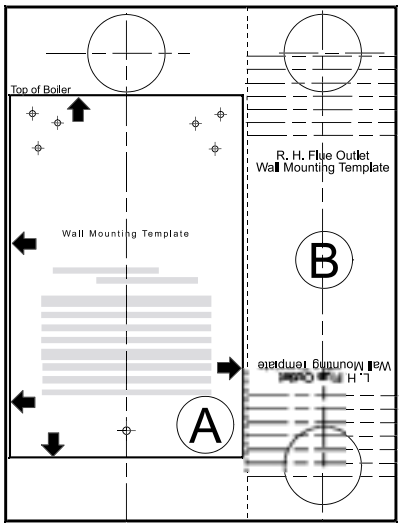

Wall mounting template

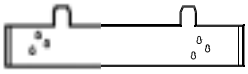

Wall mounting plate

Hardware Pack

- 50mm x No.14 wood screws - 3 off.
- Wall plugs (TP2B) - 3 off.
- Water treatment warning label.
- Condensate drain adaptor.
- Turret clamp.
- M5 x 10 pozi Hex screw
- Mains lead connector

Pack B Contents

- Flue turret
- Flue terminal
- Flue support cutting aid

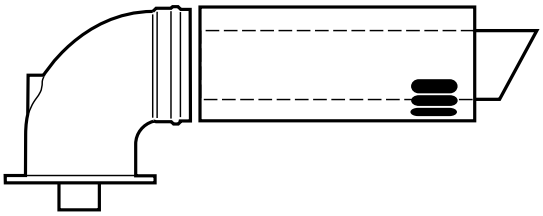

Flue turret Flue terminal

12 PACKAGING REMOVAL

1. Ensure the boiler is stood correctly, as marked on the carton.
2. Remove the strapping.
3. Fold back the top flaps to gain access to the wall mounting plate, instructions, hardware pack and user controls.
4. Remove the instructions and read thoroughly before unpacking the product. Unpack the user's controls and hardware pack and retain in a safe place.
5. When ready for installation lift off the cardboard carton.

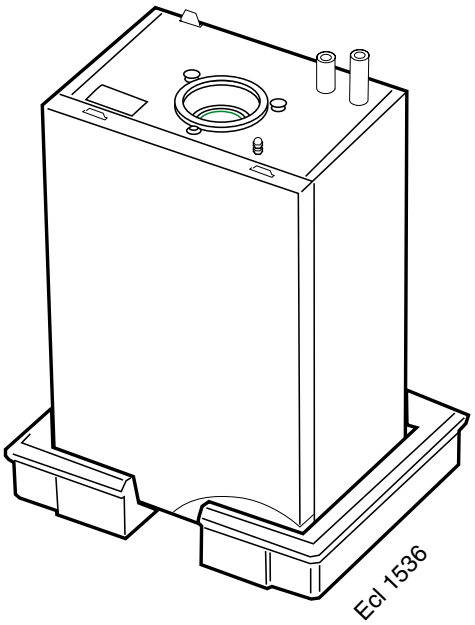

13 FRONT PANEL AND BOTTOM PANEL REMOVAL

1. Remove the 2 retaining screws.
2. Lift front panel and remove.
3. To remove the bottom panel remove the 2 screws.
4. Pull the RH side of the panel down. Slide it to the right and withdraw.

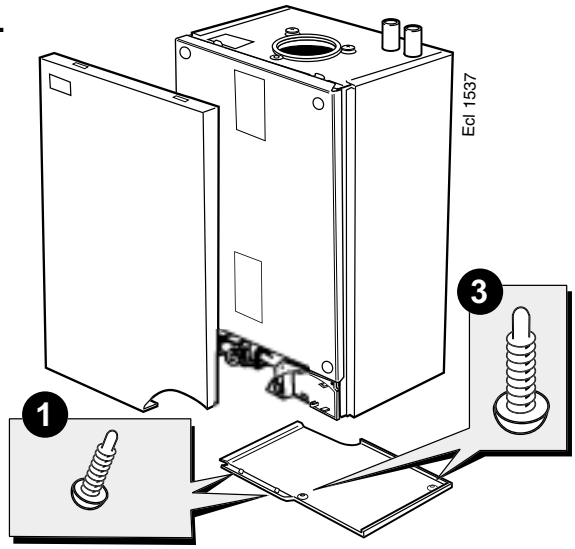

14 DETERMINING THE FLUE LENGTH AND FLUE PACKS REQUIRED

IMPORTANT. The boiler MUST be installed in a vertical position

Dimension X - Wall thickness.

Dimension L - Wall thickness plus boiler spacing.

Dimension S - Stand-off frame depth = 33mm.

FLUE KITS

Pack B - supplied as standard

Finishing Kit - supplied as standard

Pack D - optional extension kit for side flue or rear flue outlet.

Refer to 'Flue Extension Ducts'

Total Flue length dimension		Flue
Rear flue dim. X+160	**Side flue dim. L+195**	**Extra packs required**
Up to 650 mm	Up to 650 mm	none
Up to 1600 mm	Up to 1600 mm	Pack D - 1 off
Up to 2550 mm	Up to 2550 mm	Pack D - 2 off
Up to 3500 mm	Up to 3500 mm	Pack D - 3 off
Up to 4450 mm	Up to 4450 mm	Pack D - 4 off
Up to 5400 mm	Up to 5400 mm	Pack D - 5 off
Up to 6000 mm	Up to 6000 mm	Pack D - 6 off

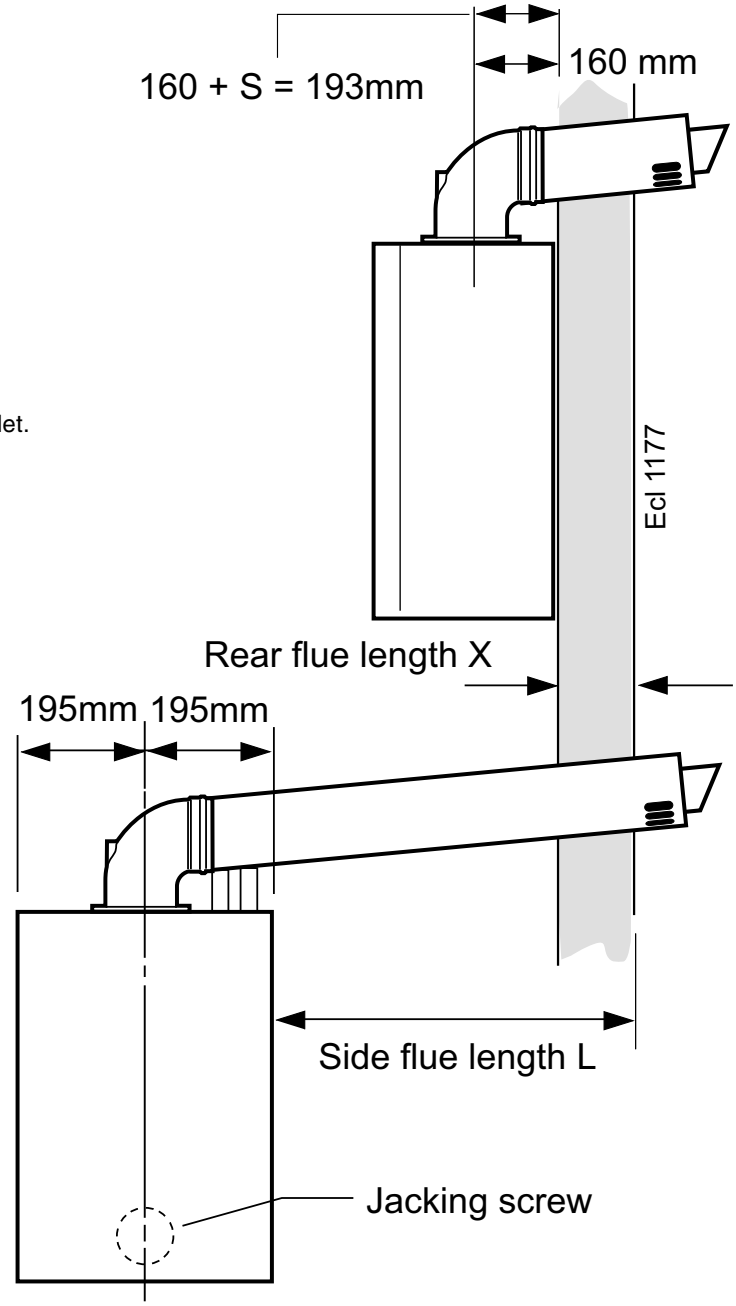

Notes.

1. *The flue duct MUST be inclined at 1.5 degrees to the horizontal to allow condensate to drain back into the boiler and out through the condensate drain.*
2. *If the boiler is to be installed with downward piping routed behind the boiler then the optional stand-off kit should be used. Care must be taken when cutting the ducts and marking the wall to suit this condition.*

15 FLUE ASSEMBLY - Exploded View

An optional flue duct extension kit is required for wall thicknesses greater than :

Side	455mm	(18")
Rear	490mm	(19 1/4").

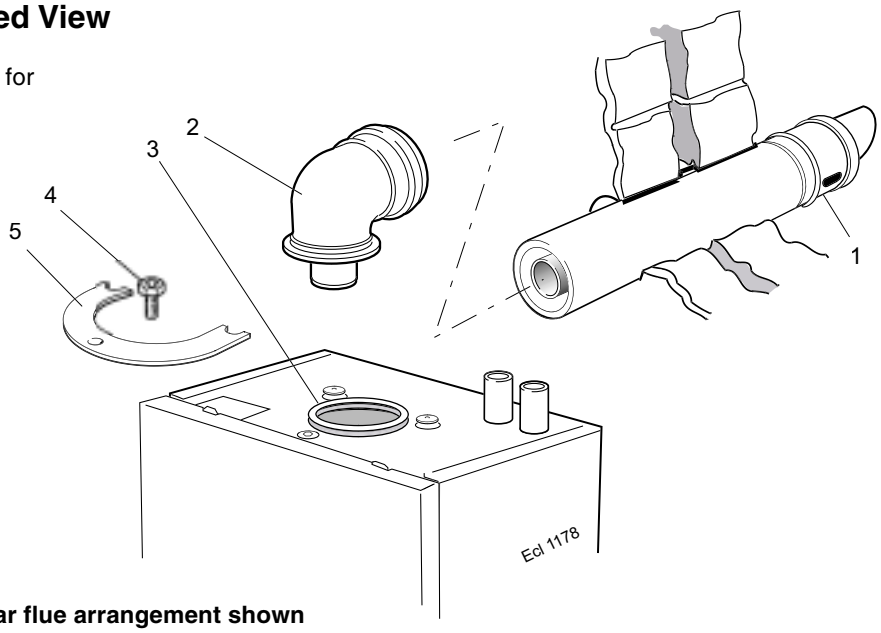

Rear flue arrangement shown

LEGEND

1. Duct assembly.
2. Flue turret.
3. Turret gasket.
4. M5 x 10 pozi screw.
5. Turret clamp.

16 WALL MOUNTING TEMPLATE

Note.
The template shows the positions of the fixing holes and the flue hole centres for standard installation and for using the stand-off kit. Care MUST be taken to ensure the correct holes are drilled.

1. Separate the templates.
2. Tape template **A** into the selected position.
3. Ensure squareness by hanging a plumbline as shown. If fitting a side flue extend the flue centre line onto the side wall. Tape template **B** into the selected position.
4. Mark onto the wall the following:
   - **a** The 2 wall mounting plate screw positions (choose one from each group) and the jacking screw position. If using the stand-off kit mark on 4 screw positions (choosing one from each group).
   - **b.** The position of the flue duct hole (see diagram below, and template).

   Note. *Mark the centre of the hole as well as the circumference*
5. Remove the template from the wall.

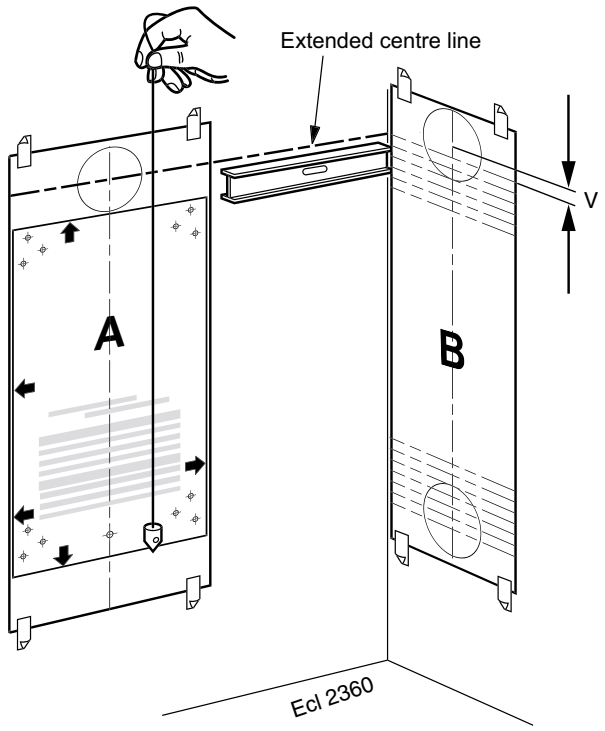

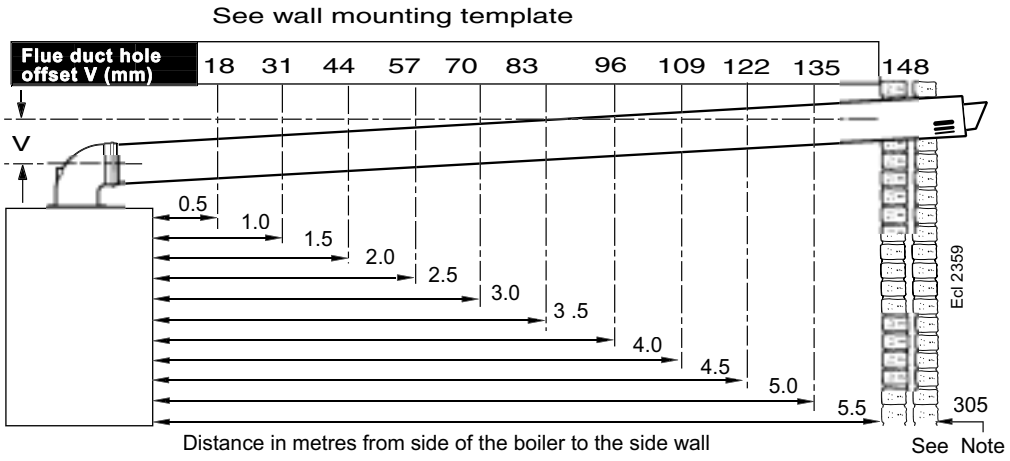

Note. *If wall thickness is greater than 305mm then dimension H must be reduced by the same amount and the offset may be adjusted accordingly.*

FLUE OUTLET

17 PREPARING THE WALL

IMPORTANT. Ensure that, during the cutting operation, masonry falling outside of the building does not cause damage or personal injury.

1. Cut the flue hole (preferably with a 5" core boring tool), ensuring that the hole is square to the wall.
   Both wall faces immediately around the cut hole should be flat.
2. Drill 3 holes with a 7mm (1/4") masonry drill and insert the plastic plugs provided, for the wall mounting plate and the jacking screw plate.

Note.
If using the stand-off kit then drill 4 holes (choosing one from each group but not the jacking screw).

3. Locate 2 No.10 x 2" screws in the piping frame (one at each side, in any of the 3 holes provided at each side) and screw home.

Note.
If using the stand-off kit then locate the stand-off channel and screw home.

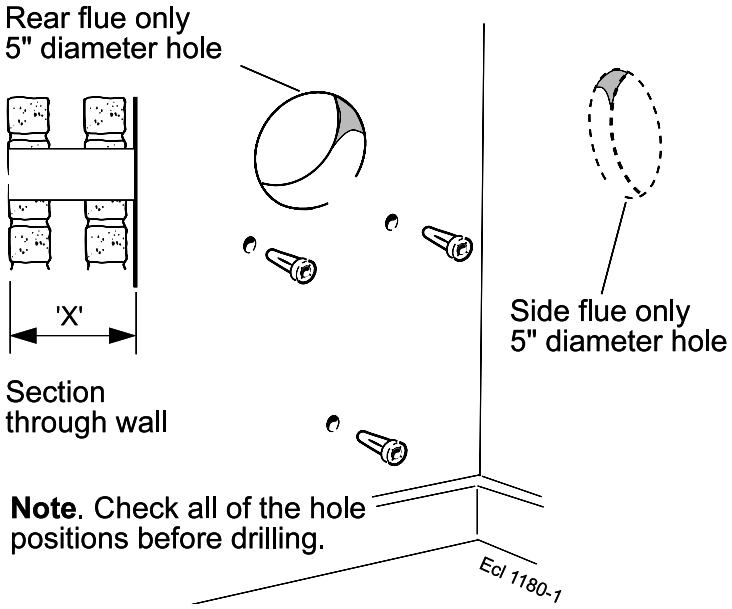

18 CUTTING THE FLUE - REAR **Wall thicknesses of 114 to 490mm**

Notes.

a. *If using the extension ducts go to Frame 20.*

b. *If the stand-off frame is used it is essential to add 33mm to dimension X.*

1. Measure and note wall thickness X. Refer to Frame 14.
2. Add 90mm (3 1/2") to dimension X and, measuring from the ring, cut the outer tube only.
3. To ensure the tube is cut square, mark the flue all the way around.
4. Cut the inner tube to a length 20mm (3/4") longer to aid engagement, using the cardboard support.

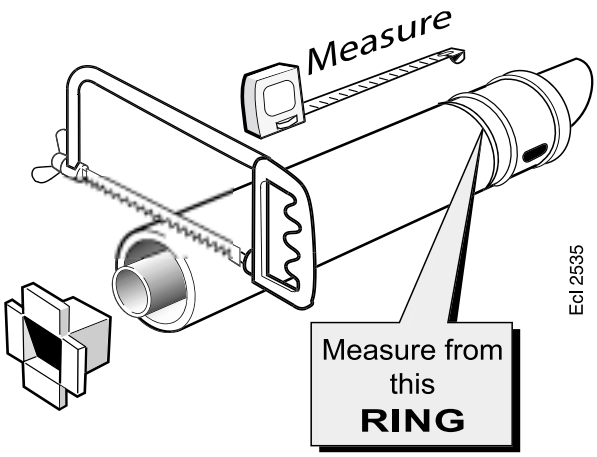

19 CUTTING THE FLUE - SIDE **Wall thicknesses of 114 to 455mm**

Note. *If using the extension ducts go to Frame 20.*

1. Measure and note side flue length L. Refer to Frame 14.
2. Add 125mm (5") to dimension L and, measuring from the ring, cut the outer tube only.
3. To ensure the tube is cut square, mark the flue all the way around.
4. Cut the inner tube to a length 20mm (3/4") longer to aid engagement, using the cardboard support.

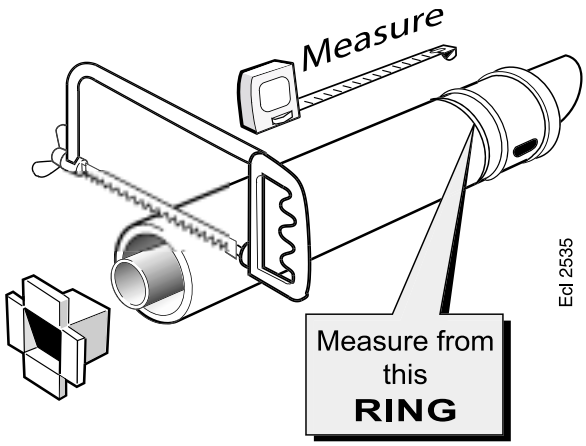

20 FLUE EXTENSION DUCTS - For flue lengths greater than 480mm

Pack D Flue extension duct kit contents.

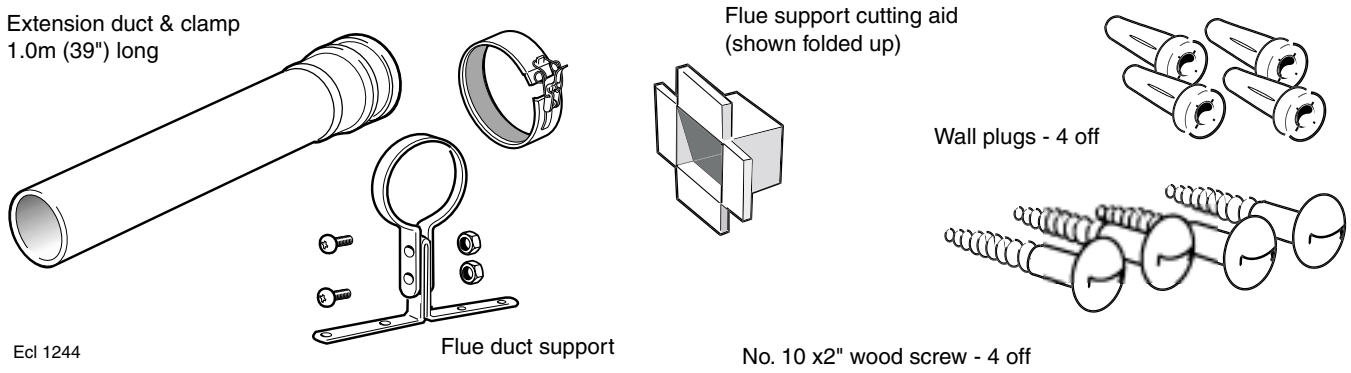

21 FLUE EXTENSION DUCTS - continued

Use a maximum of 6m extended flue ONLY

General arrangement

1. A ***maximum*** of 6 extension ducts (one suitably cut) plus the standard flue duct may be used together.
2. Flue extensions of greater length than 1m (39") should be supported with the bracket provided, suitably adjusted. Refer to Frame 21 & 24.

Note. *Side flue shown*

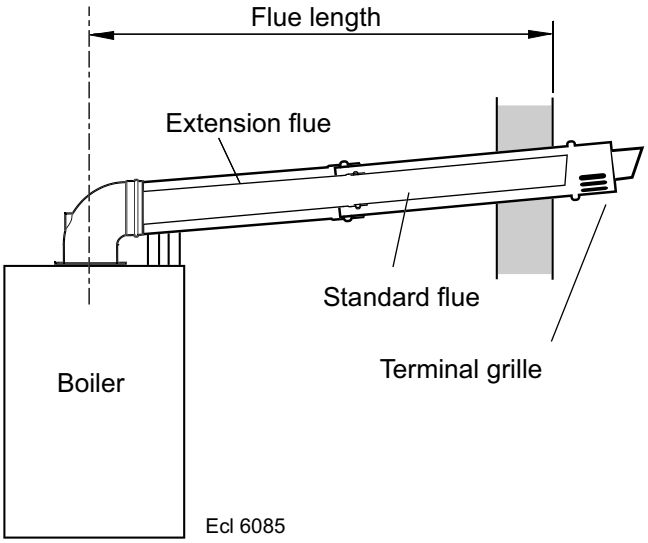

22 FITTING THE KIT

1. Remove the cardboard support aid from the flue and place safely to one side.
2. Fit the inner flue extension duct onto the inner flue duct.
3. Fit the outer flue extension duct onto the outer air duct.
4. Using the clamp provided clamp the flue lengths together.
5. Repeat steps 1-4 if a second flue extension is required.
6. Measure and mark the flue length required onto the flue, measuring from the ring near the terminal.
7. To ensure a square cut, mark the flue all the way round.
8. Cut to length, using the cardboard support aid.
9. Remove the cardboard off-cut and deburr the metal edges.

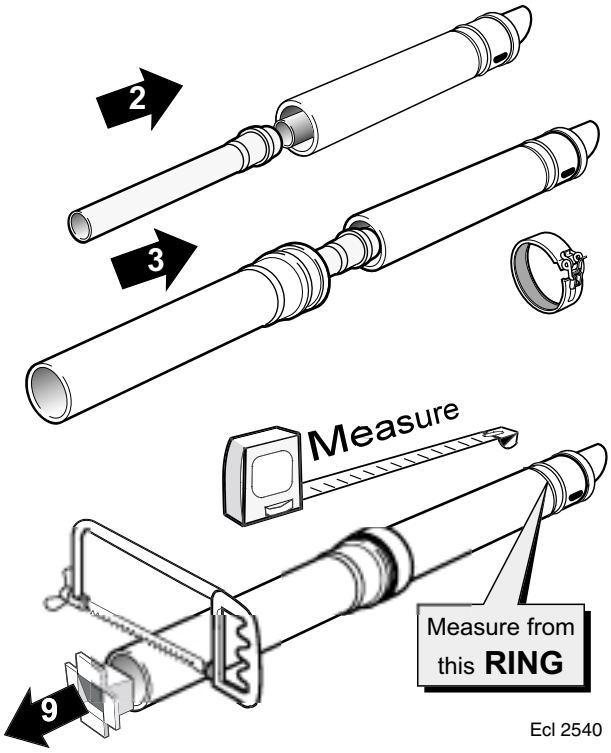

23 MOUNTING THE BOILER

1. Lift the boiler onto the wall mounting plate, as shown.
2. Check the boiler alignment using a spirit level and adjust as necessary with the jacking screw.
3. Align the hole in the jacking plate with the pre-drilled hole in the wall and fix in position with the No.10 x 2" screw provided.

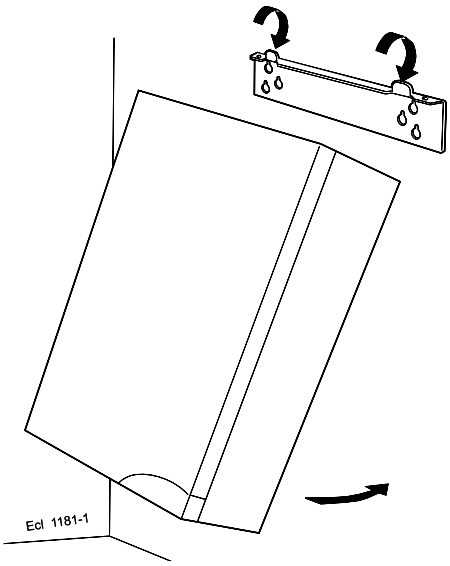

24 CONNECTING THE FLUE TO THE BOILER

Note.
Before fitting the flue turret fill the condensate trap within the boiler by pouring a cupful of water into flue outlet A. Take care to ensure that the water is only poured into the flue outlet, and does not spill into the boiler casing.

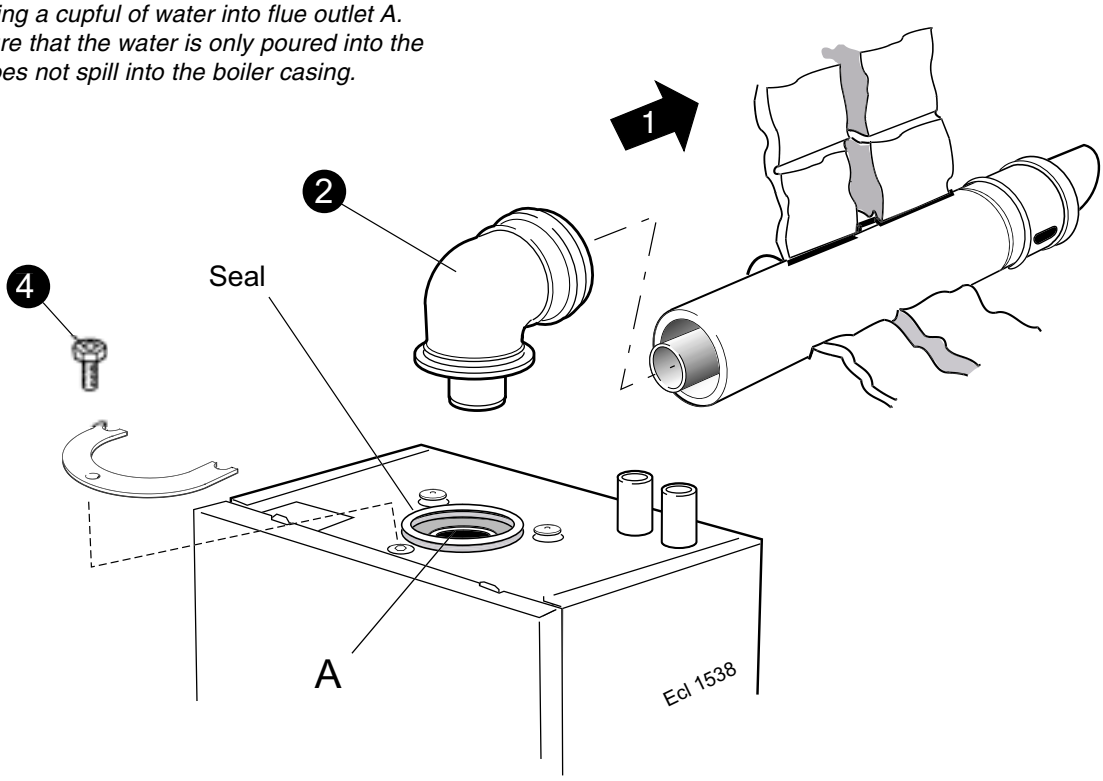

1. Insert the flue assembly through the prepared hole in the wall.
2. Locate the flue turret on the top of the boiler, ensuring that the turret gasket is in place. Check that the flue seal (at A) located in the top of the flue manifold is secure and giving an effective seal.
3. Locate the flue into the turret.
4. Secure the flue turret on top of the boiler by inserting the open ends of the turret clamp under the 2 studs and fixing it in the middle with the single M5 x 10mm pozi-hex screw provided.
5. **Flues over 1 metre long.**

   Fix the flue support bracket to the wall, using the wall plug and wood screw. For standard installations use the short wood screw.

   If the stand-off option is used, secure the support bracket using the spacer bracket and long wood screw.

NB. The space bracket will utilise one fixing hole only whilst used in conjunction with the stand-off option.

25 BOILER WATER CONNECTIONS

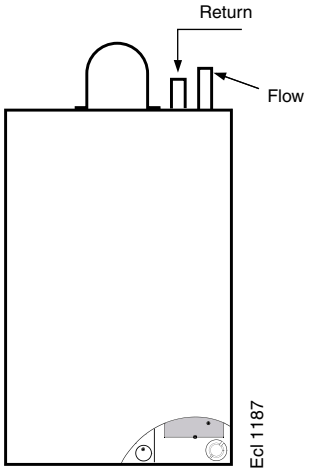

The boiler flow and return pipes are supplied fitted to the boiler and ready for top connection.

Note. *For heating loads in excess of 60 000 Btu/h use 28mm x 22mm connectors to connect the boiler flow and return pipes to 28mm.*

TOP CONNECTION
Connect the system pipework to the boiler flow and return pipes.

26 GAS CONNECTION

IMPORTANT. The gas service cock contains a non-metallic seal so must not be overheated when making capillary connections.

Refer to Frame 2 for details of the position of the gas connection.

The principle of the 1:1 gas valve ensures that the **icos m3080** is able to deliver its full output at inlet pressures well below those required by BS. 6891.

A boiler gas supply pipe length of 20m and not less than 15mm O.D. can be connected to the boiler via the gas service cock union.
Ensure that the gas supply pipe does not foul the boiler casing.

Refer to Frame 34 for details of the pressure test point position.

27 CONDENSATE DRAIN

Refer also to the British Gas document: 'Guidance Notes for the Installation of Domestic Gas Condensing Boilers' (1989).

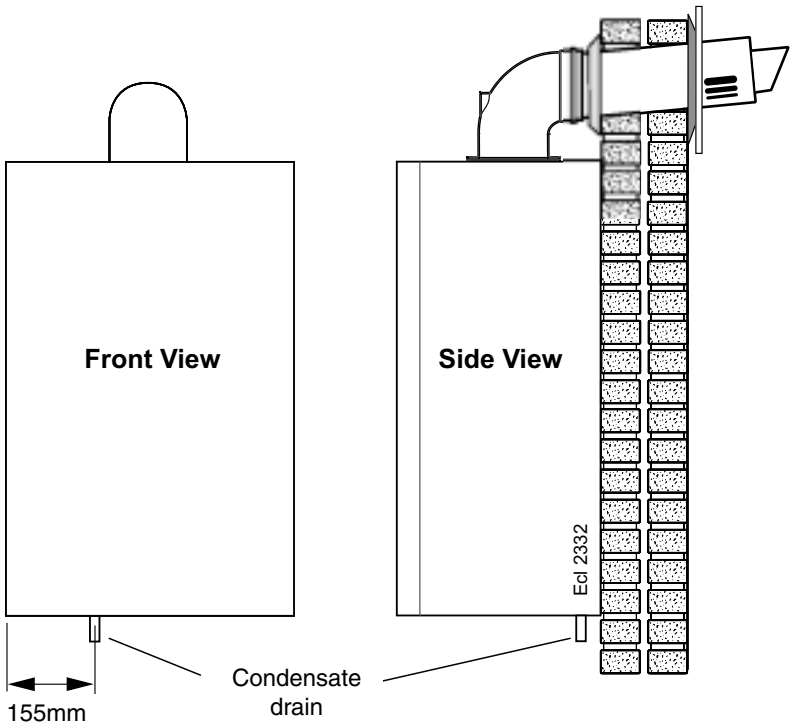

The condensate drain provided on the boiler must be connected to a drainage point, preferably within the building.

Ensure that the condensate trap is full of water before commissioning the boiler. Refer to Frame 24.

The routing of the drain must be made to allow a minimum fall of 1 in 20 away from the boiler, throughout its length.

The drainage pipework must be arranged so that obstruction (e.g. through freezing) of external drainage pipe does not give rise to spillage within the dwelling.

IMPORTANT. If excessive external pipework cannot be avoided an additional siphon kit and insulation are recommended, in order to prevent possible freezing.

All pipework and fittings in the condensate drain system must be made of plastic. No other materials may be used.

The drain outlet on the boiler is standard 21.5mm overflow pipe. This size must not be reduced in any part of its length.

28 ELECTRICAL CONNECTIONS

WARNING. This appliance MUST be earthed.

A mains supply of 230 V ~ 50 Hz is required.

All external controls and wiring MUST be suitable for mains voltage.

The fuse rating should be 3 A.

Wiring external to the boiler MUST be in accordance with the current I.E.E. (BS.7671) Wiring Regulations and any local regulations.

Wiring should be 3 core PVC insulated cable NOT LESS than 0.75 mm^2 (24 x 0.2mm) and to BS. 6500, Table 16.

For IE reference should be made to the current ETCI rules for electrical installations.

Connection must be made in a way that allows complete isolation of the electrical supply - such as a double pole switch having a 3mm (1/8") contact separation in both poles, or a plug and socket serving only the boiler and system controls. The means of isolation must be accessible to the user after installation.

29 INTERNAL WIRING

A pictorial wiring diagram is shown in Frame 30.

1. Route the mains cable into the bottom LHS rear of the casing. If using the stand-off kit then route through the grommet.
2. Wire a permanent live supply into the 5-way remote plug terminals L3, N and ⏚.

   IMPORTANT. A permanent live is ESSENTIAL in order for the advanced diagnostic controls to function correctly.
3. Wire the switched live supply into L2 or connect L1 and L2 via external control switching, as shown in Frame 32. In either case, remove the wire link fitted L1 to L2.
4. Secure the mains lead with the cable clamp.
5. Connect the mains lead connector. Ensure it is fully located.

Note.
Ensure that the lengths of the current carrying conductors are shorter than the earth conductor so that if the cable slips in its anchorage the current carrying conductors become taut before the earth conductor.

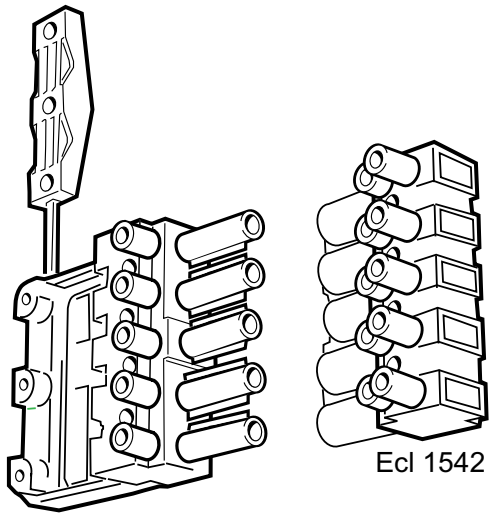

Incoming mains wiring detail

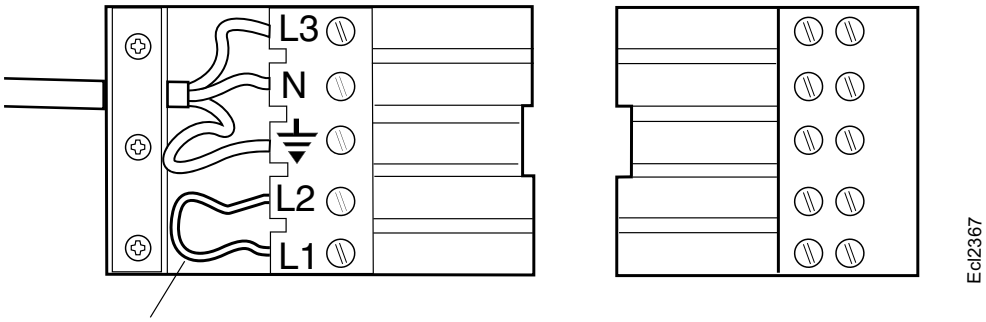

Remove link when connecting external programmer.

Mains Connector **Socket**

(supplied in hardware pack) **(fixed to boiler)**

30 PICTORIAL WIRING DIAGRAM

LEGEND

b	blue
bk	black
br	brown
gy	grey
or	orange
pk	pink
r	red
v	violet
w	white
y/g	yellow/green

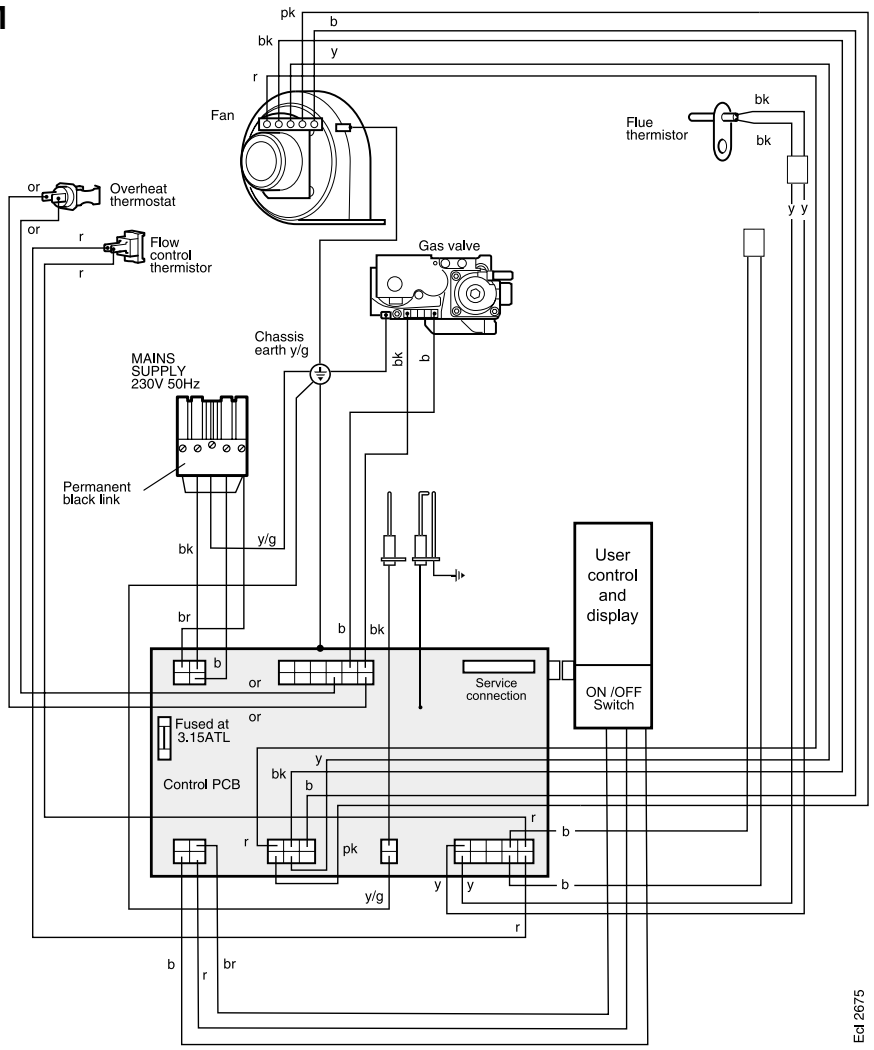

31 FUNCTIONAL FLOW WIRING DIAGRAM

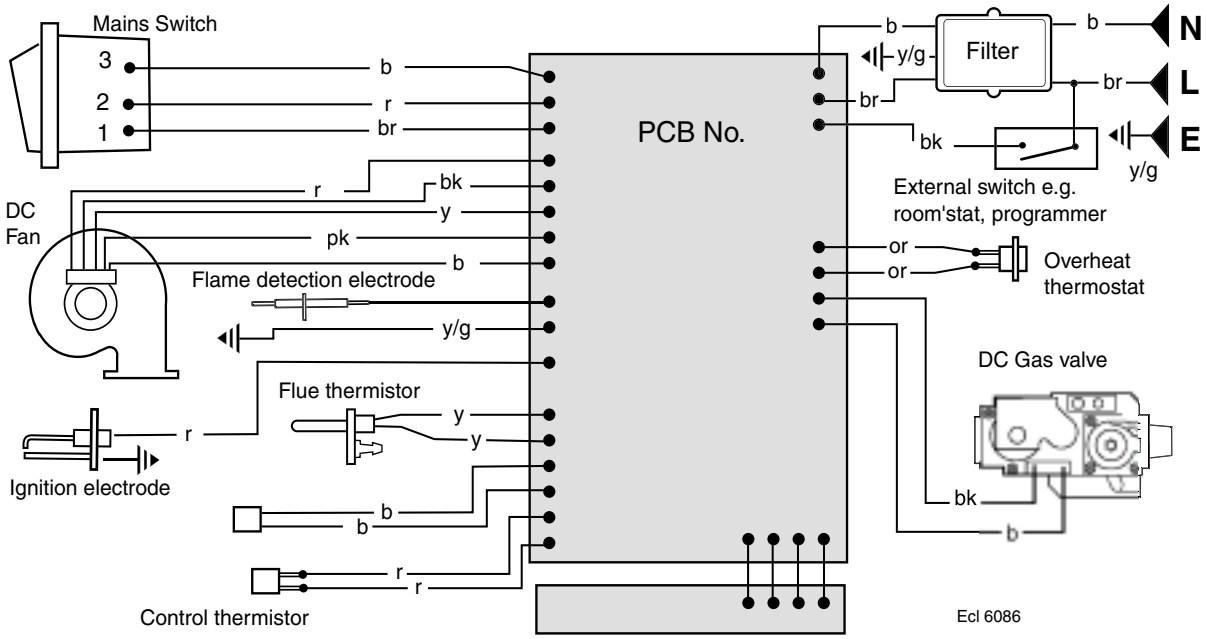

Legend		**br**	brown	**pk**	pink		
b	blue	**gy**	grey	**r**	red	**w**	white
bk	black	**or**	orange	**v**	violet	**y/g**	yellow/green

32 EXTERNAL ELECTRICAL CONTROLS

Wiring external to the boiler MUST be in accordance with the current I.E.E. (BS.7671) Wiring Regulations and any local regulations. For IE reference should be made to the current ETCI rules for electrical installations.

The fuse should be 3A.

Room Thermostat

If the thermostat has a neutral connection use it. (It provides for more energy efficient operation by reducing switching temperature differentials.)

Frost Protection

If parts of the pipework run outside the house or if the boiler will be left off for more than a day or so then a frost thermostat should be wired into the system. This is usually done at the programmer, in which case the programmer selector switches are set to OFF and all other controls MUST be left in the running position.

The frost thermostat should be sited in a cold place but where it can sense heat from the system.

If the boiler is installed in a garage it may be necessary to fit a pipe thermostat, preferably on the return pipework.

Important. Ensure that the frost thermostat is wired so that the system pump and/or external diverter valve is energised, as appropriate.

Designation of the terminals will vary but the programmer and thermostat manufacturers' leaflets will give full details.

Diagram A shows an application to boilers fitted with a room thermostat only.

Diagrams B and C show applications to boilers fitted with alternative time controls.

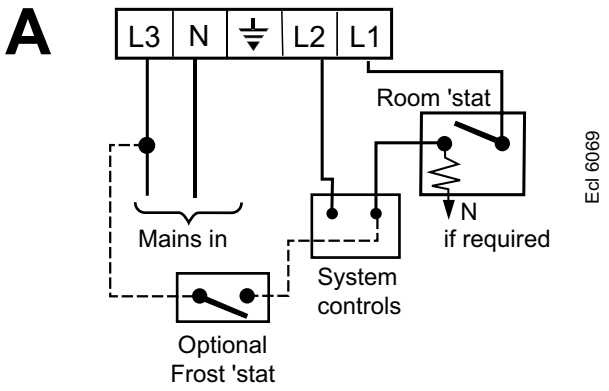

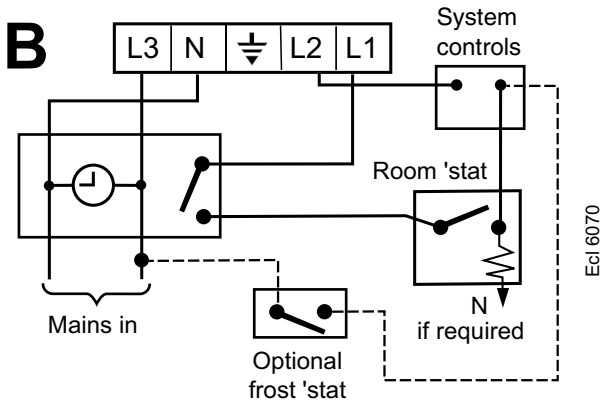

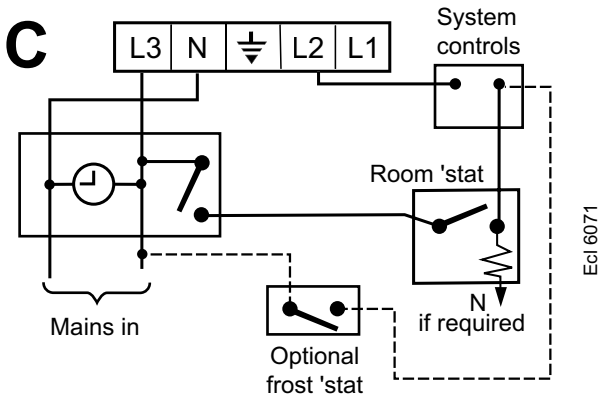

Earths are not shown for clarity but MUST NEVER BE OMITTED.

33 COMMISSIONING AND TESTING

A. ELECTRICAL INSTALLATION

1. Checks to ensure electrical safety should be carried out by a competent person.
2. ALWAYS carry out the preliminary electrical system checks, i.e. earth continuity, polarity, resistance to earth and short circuit, using a suitable test meter.

B. GAS INSTALLATION

1. The whole of the gas installation, including the meter, should be inspected and tested for soundness and purged in accordance with the recommendations of BS. 6891. In IE refer to I.S.813:2002.
2. Purge air from the gas installation by the approved methods only.

WARNING. **Whilst effecting the required gas soundness test and purging air from the gas installation, open all windows and doors, extinguish naked lights and DO NOT SMOKE.**

34 INITIAL LIGHTING

1. Check that the system has been filled and that the boiler is not air locked.

Note.
It is important the burner is not operated before the system is fully vented of air. If it is necessary to operate the appliance pump to assist venting of the air this must be done with the gas service cock turned off.

2. Check that all drain cocks are closed and any valves in the flow and return are open.
3. Check the electrical supply is off.
4. Ensure the boiler sealing panel is fitted.
5. Check the gas service cock is open.
6. Check that the boiler on/off switch (A) is OFF
7. Carefully align the user control and push gently into place. Secure with the single screw located underneath.
8. Slacken the screw in the inlet pressure test point (G) and connect a gas pressure gauge via a flexible tube.
9. Switch the electricity supply ON and check all external controls are calling for heat.
10. Set the boiler thermostat knob (B) to position 6 and switch the boiler on/off switch (A) to ON. The RED mains ON neon (C) should now be illuminated. The boiler control should now go through its ignition sequence until the burner is established.
11. If the boiler does not light after 3 attempts the fault codes *L' 'F'* will be displayed. Press the reset button (E); the boiler will then repeat its ignition sequence. When the burner is established the GREEN burner ON neon (D) will be permanently illuminated
12. Ensure that with the boiler operating the dynamic gas pressure is able to obtain maximum output. Refer to Table 2.

N.B. The principle of the 1:1 gas valve ensures that the **icos m3080** is able to deliver its full output at inlet pressures well below those required by BS. 6891.

IMPORTANT.
The gas input to the burner is regulated by the gas valve according to the air flow produced by the fan. It is NOT user-adjustable. Any interference to sealed settings on the gas valve will adversely affect operation and render our warranty void.

Note. *Boiler is shown with the front panel and sealing panel removed.*

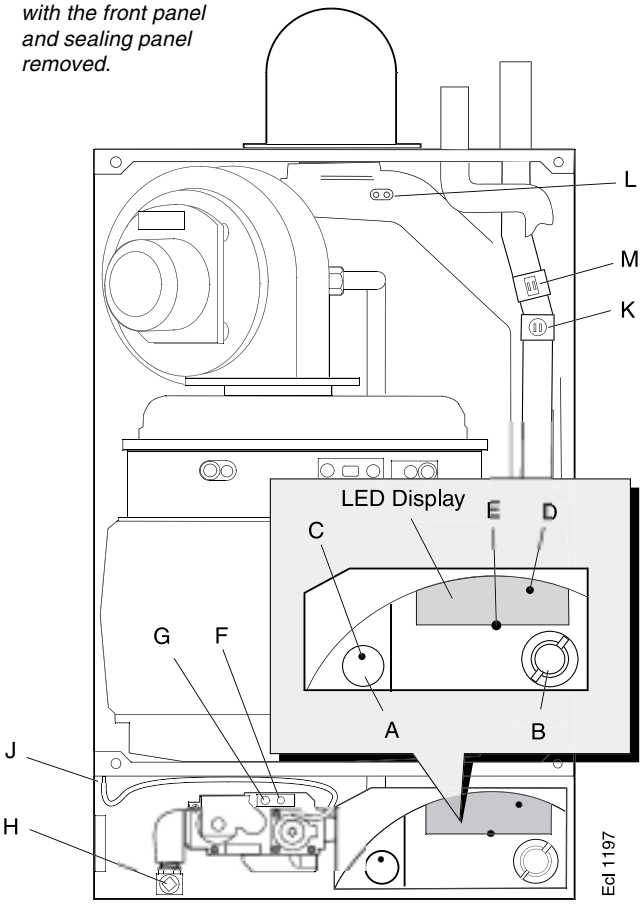

LEGEND

A	On/Off switch.	**G**	Inlet pressure test point.
B	Thermostat knob.	**H**	Gas service cock.
C	'Mains On' neon.	**J**	Casing pressure test point.
D	'Burner On' neon.	**K**	Overheat thermostat.
E	Reset button.	**L**	Flue thermistor.
F	Injector pressure test point.	**M**	Flow thermistor.

13. Switch OFF the boiler on/off switch.
14. Remove the pressure gauge and tube. Tighten the sealing screw in pressure test point. Ensure a gas tight seal is made.
15. Refit the boiler front panel and bottom panel.

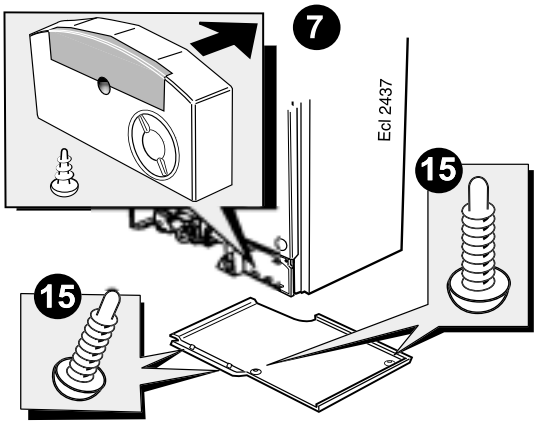

THE DISPLAY

The user control has one neon and one display to inform the user about the status: the display will show the status of the boiler and the neon will show the status of the flame. If no flame is detected the neon is blinking. When the flame is detected the neon will be lit permanently.

Below is a list with display function in normal operation.

0 Standby. No demand for heat present.

c Boiler is active for central heating.

H Boiler is in lockout for a specific error. The display will be blinking, alternating with a number or letter to show which error is detected.

L Boiler is in lockout for a specific error. The display will be blinking, alternating with a number or letter to show which error is detected.

35 GENERAL CHECKS

Make the following checks for correct operation:

1. **Central Heating**
   The correct operation of ANY programmer and all other system controls should be proved. Operate each control separately and check that the main burner or circulating pump, as the case may be, responds.

   Ensure the external controls are calling for heat. After ignition the display should read:

   c ☀ - green neon on

2. **Gas Rate**
   Operate the boiler for 10 minutes. Check the boiler gas rate (see Table 2), ensuring the boiler is at full output whilst measurements are recorded.

3. **Water Circulation System**

   Note. *Fernox Superfloc, Sentinel X300 (new systems) or X400 (existing systems) flushing solutions should be used during the flushing procedure. Refer to Frame 9.*

   a. With the system HOT examine all water connections for soundness.

   b. With the system still HOT, turn off the gas, water and electricity supplies to the boiler and drain down to complete the flushing process.

   c. Refill and vent the system, add inhibitor (see Frame 9), clear all air locks and again check for water soundness. Adhere the water treatment warning label, supplied in the hardware pack, in a *prominent position* on the system, to prevent the use of incorrect water treatment additives.

   d. Balance the system. Refer to Frame 4.

4. Check the condensate drain for leaks and check that it is discharging correctly

5. Finally set the controls to the user's requirements.

Knob Setting	Flow Temperature °C	°F
Min	30	86
Max	82	180

- The temperatures quoted alongside are approximate, and vary between installations.

36 HANDING OVER

After completing the installation and commissioning of the system the installer should hand over to the householder by the following actions:

1. Hand the User's Instructions to the householder and explain his or her responsibilities under current Gas Safety (Installation and Use) Regulations or rules in force.

2. Explain and demonstrate the lighting and shutting down procedures.

3. The operation of the boiler and the use and adjustment of ALL system controls should be fully explained to the householder to ensure the greatest possible fuel economy consistent with household requirements of both heating and hot water consumption.
   Advise the User of the precautions necessary to prevent damage to the system and to the building in the event of the system remaining inoperative during frosty conditions.

4. Explain the function and the use of the boiler thermostat and external controls.

5. Explain the function of the boiler overheat thermostat and emphasise that if cutout persists, the boiler should be turned off and a CORGI registered installer consulted. In IE contact a Competent Person.

6. Explain and demonstrate the function of time and temperature controls, radiator valves, etc., for the economic use of the system.

7. If any programmer is fitted then draw attention to the Programmer User's Instructions and hand them to the householder.

8. **After installation, commissioning and customer hand-over please complete the benchmark appliance log book and leave this with the customer. For IE, it is necessary to complete a "Declaration of Conformity" to indicate compliance to I.S.813:2002.**

9. **IMPORTANT**
   Stress the importance of regular servicing by a CORGI registered installer and that a comprehensive service should be carried out AT LEAST ONCE A YEAR. In IE servicing work must be carried out by a Competent Person.

10. As the installer you may wish to undertake the service contract yourself or alternatively offer to the customer the benefits of the Ideal Care Scheme, details of which are outlined in the household pack supplied with this boiler.

37 SERVICING SCHEDULE

To ensure the continued safe and efficient operation of the appliance it is recommended that it is checked at regular intervals and serviced as necessary. The frequency of servicing will depend upon the installation condition and usage but should be carried out annually. It is the law that any service work must be carried out by a CORGI registered installer. In IE service work must be carried out by a competent person.

Note.
Some aluminium oxide build-up on the heat exchanger fins is usual with this type of condensing boiler. Though removal is recommended annually, the heat exchanger MUST *be inspected and cleaned after a MAXIMUM of 2 years operation.*

1. Light the boiler and carry out a pre-service check, noting any operational faults.
2. Check the gas consumption.
3. Connect a suitable gas analyser to the sampling point on top of the boiler or into the flue terminal, if access is possible. Refer to Frame 39.

   For correct boiler operation the CO/CO_2 ratio of the flue gas should not be greater than 0.004 ratio. If this is the case, and the gas input is at least 90% of the nominal, once compliance with the note above is ensured, then no further action need be taken. If not, proceed to step 4 .
4. Clean the main burner.
5. Clean the heat exchanger .
6. Check the condition of the combustion chamber insulation. Any cracked/damaged pieces should be replaced.
7. Check the main injector for blockage or damage.
8. Wherever possible, remove and clean the condensate 'S' trap (refer to Frame 42) and check the drain for blockage.
9. Check that the flue terminal is unobstructed and that the flue system is sealed correctly.

The servicing procedures are covered more fully in Frames 38-44 and MUST be carried out in sequence.

Note. *In order to carry out either servicing or replacement of components the boiler front panel, bottom panel and sealing panel must be removed. Refer to Frames 38 and 39.*

WARNING.
Always turn off the gas supply at the gas service cock, and switch off and disconnect the electricity supply to the appliance before servicing.

IMPORTANT.

10. After completing the servicing or exchange of components always test for gas soundness and carry out functional checks as in paragraphs 2 and 3.
11. When work is complete the sealing panel MUST be correctly refitted, ensuring that a good seal is made.

DO NOT OPERATE THE BOILER IF THE SEALING PANEL IS NOT FITTED.

12. If, for any reason, the condensate trap has been removed ensure that the trap is refilled with water before reassembling.
13. Complete the service section in the Benchmark log book.

38 BOILER FRONT PANEL REMOVAL

1. Remove the 2 screws from the underside of the appliance.
2. Pull the front panel forward at the bottom and lift to disengage it from the top lugs.

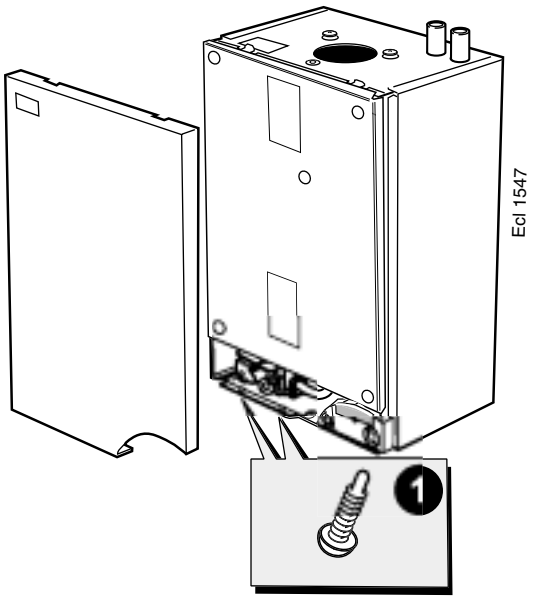

39 BOILER SEALING PANEL/ BOTTOM PANEL REMOVAL

1. To remove the sealing panel remove the 4 screws.
2. Remove the panel.
3. To remove the bottom panel remove the 2 screws.
4. Pull the RH side of the panel down. Slide it to the right and withdraw.

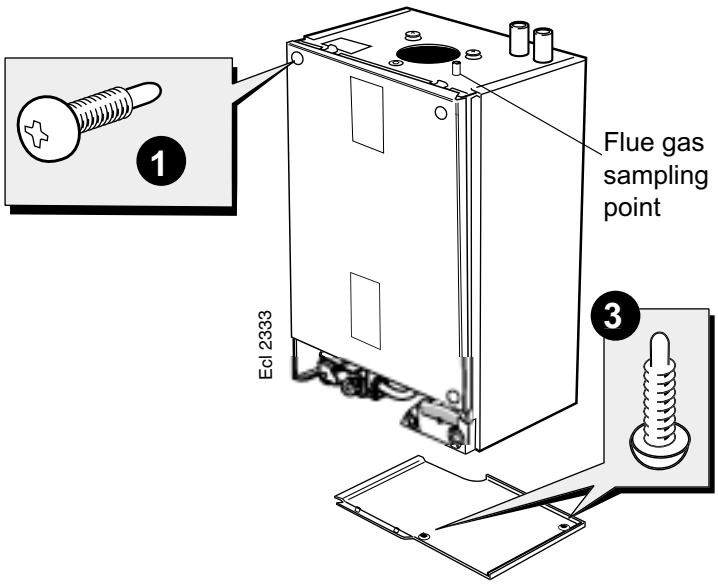

40 FAN AND VENTURI ASSEMBLY REMOVAL AND CLEANING

1. Disconnect the electrical leads from the fan.
2. Undo the gas pipe union connection to the injector housing.
3. Undo the screw on the fan mounting bracket.
4. Lift off the fan and venturi assembly.
5. Inspect the injector for blockage or damage.

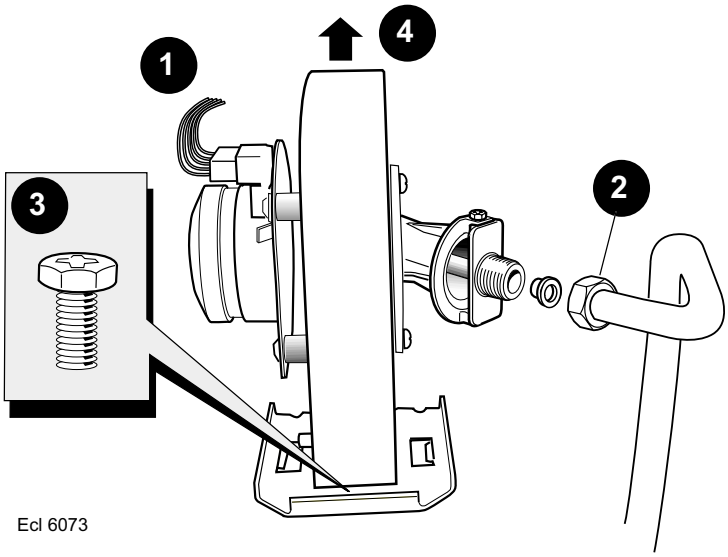

41 BURNER REMOVAL AND CLEANING

1. Remove the 6 screws retaining the burner (the 3 screws at the rear are extended to ease access.)
2. Lift off the burner from the combustion chamber.

IMPORTANT

The burner head is a ceramic plaque construction. **Care should be taken to ensure that the burner is not placed down upon its face** as this may cause damage to the ceramic.

3. Brush off any deposits that may be on the ceramic with a SOFT brush.
4. Inspect the sealing gasket around the burner and combustion chamber insulation for any signs of damage. Replace as necessary.

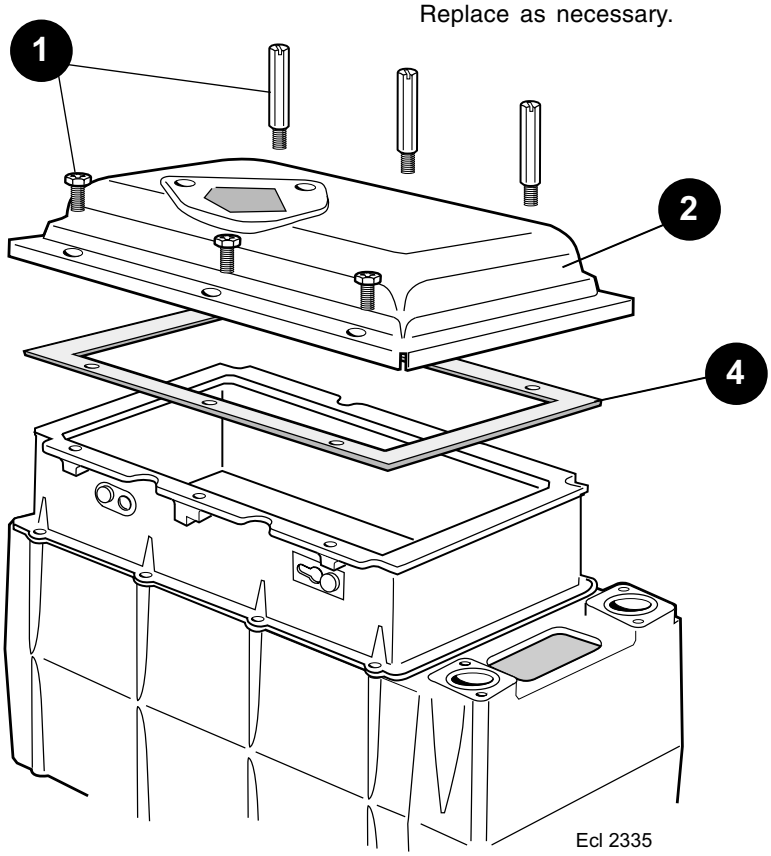

42 CLEANING THE CONDENSATE 'S' TRAP

1. Undo the plastic union nut on the condensate ‘S’ trap outlet.
2. Remove the 2 screws.
3. Pull the trap down and forward to remove.
4. Flush out any deposits with clean water.

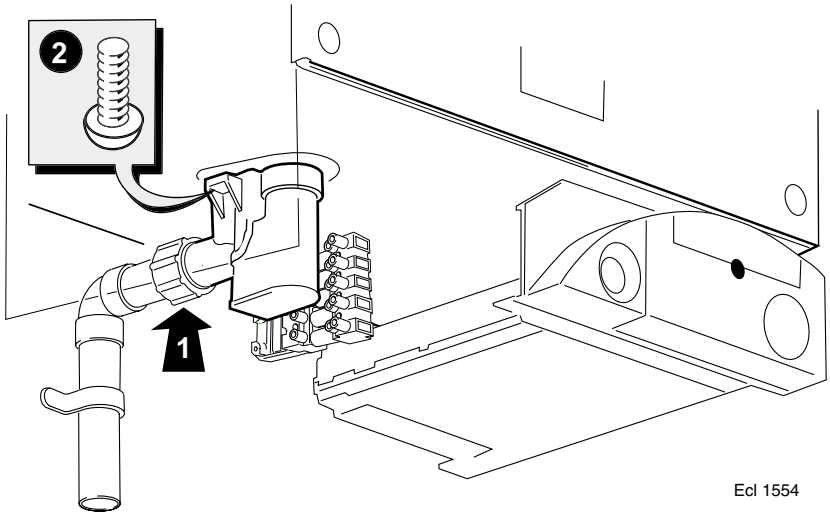

43 CLEANING THE HEAT EXCHANGER

1. Remove ignition and flame detection electrodes. Refer to Frames 49 & 50.
2. Remove the 3 screws retaining the sump cover plate and remove.
3. Using a suitable tool as supplied in the standard British Gas flue brush kit, clean between the heat exchanger fins from the top of the heat exchanger.
4. Access to the base of the heat exchanger is now possible. Brush clean any deposits from the base of the heat exchanger and remove any loose deposits from the sump.
5. Inspect the ignition and flame detection electrodes. Ensure that they are clean and in good condition. Replace if necessary.
6. Check that the ignition and detection gaps are correct. Refer to Frames 49 & 50.
7. Check the condition of the combustion chamber insulation. Any cracked/ damaged pieces should be replaced.

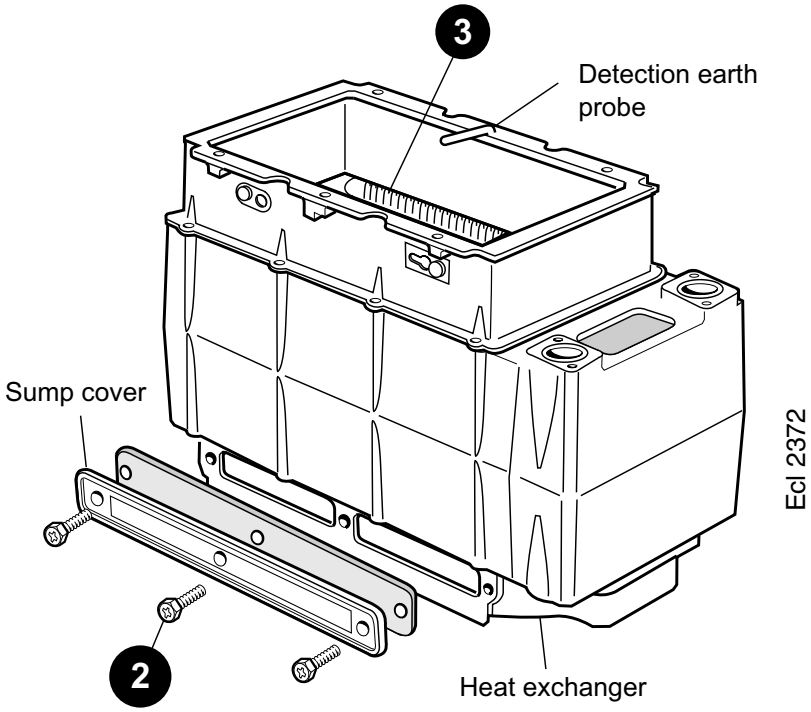

44 REASSEMBLY

Reassemble the boiler in the following order.

1. Refit the condensate ‘S’ trap, ensuring that it is full of water.
2. Refit the sump cover plate.
3. Refit the electrodes (check dimensions Frames 49 & 50).
4. Refit the burner.
5. Refit the fan / venturi assembly.
6. Reconnect the fan electrical leads.
7. Refit the boiler sealing panel.

IMPORTANT.

Ensure the boiler sealing panel is correctly fitted and that a good seal is made.

8. Refit the boiler front and bottom panels.
9. Turn on the gas supply at the gas service cock.
10. Reconnect the electrical supply.

45 REPLACEMENT OF COMPONENTS

GENERAL

When replacing ANY component:

1. Isolate the electricity supply.
2. Turn off the gas supply.
3. Remove the boiler front panel. Refer to Frame 38.

After replacing ANY component check operation of the boiler including gas soundness, gas rate and combustion test.

IMPORTANT

When work is complete, the sealing panel must be correctly fitted, ensuring that a good seal is made.

Note.

In order to assist fault finding, the control panel has an LED diagnostic display. The key to boiler fault conditions is shown in Frame 61.

THE BOILER MUST NOT BE OPERATED WITHOUT THE SEALING PANEL FITTED

46 CONTROL THERMISTOR REPLACEMENT

1. Refer to Frame 45.
2. Remove the boiler front and sealing panels. Refer to Frames 38 & 39.
3. Pull the electrical leads off the control thermistor.
4. Pull the control thermistor and spring clip off the flow pipe.
5. Replace thermistor and reconnect leads, ensuring that the spring clip is securely holding the thermistor to the flow pipe.
6. Reassemble the boiler in reverse order.
7. Check the operation of the boiler. Refer to Frame 45.

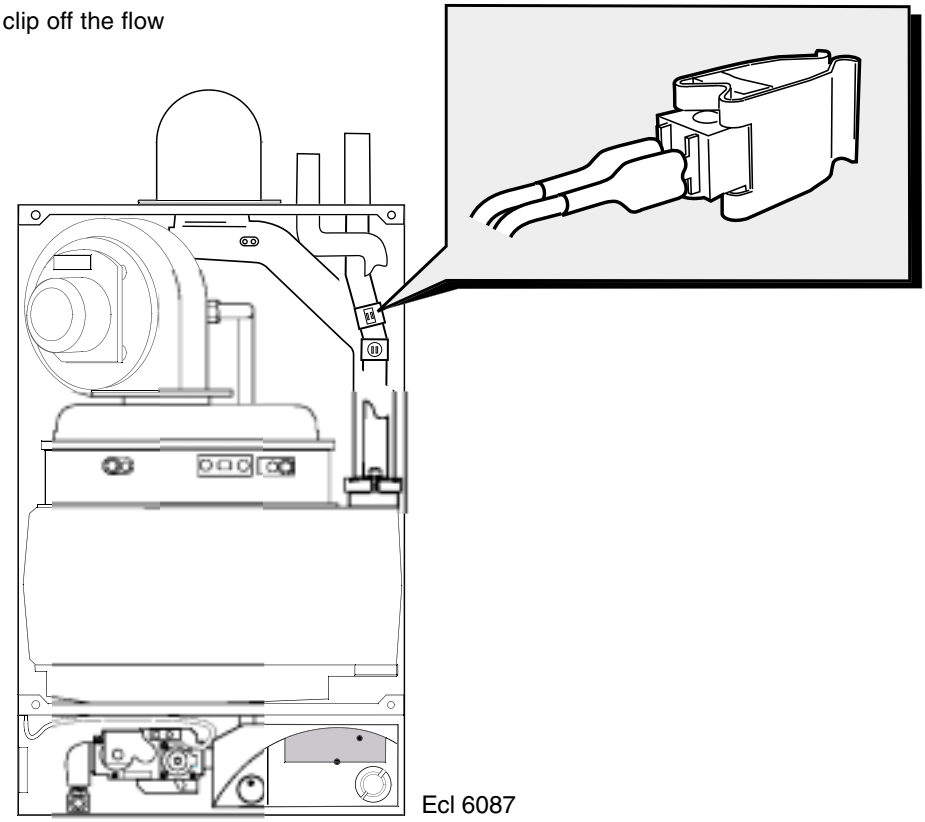

Ecl 6087

47 FAN REPLACEMENT

1. Refer to Frame 45.
2. Remove the boiler front and sealing panels. Refer to Frames 38 & 39.
3. Disconnect the electrical leads from the fan.
4. Unscrew the gas pipe union connection to the injector housing.
5. Unscrew and remove the screw retaining the fan mounting bracket.
6. Remove the fan and venturi assembly.
7. Remove the 3 screws and remove the venturi assembly, *noting the orientation of the venturi in relation to the fan body.*
8. Transfer the venturi assembly to the new fan, replacing the gasket if evidence of damage or deterioration is visible.
9. Fit the new fan / venturi assembly.
10. Reassemble the boiler in reverse order, taking care not to overtighten the screw on the fan mounting bracket.
11. Check the operation of the boiler. Refer to Frame 45.

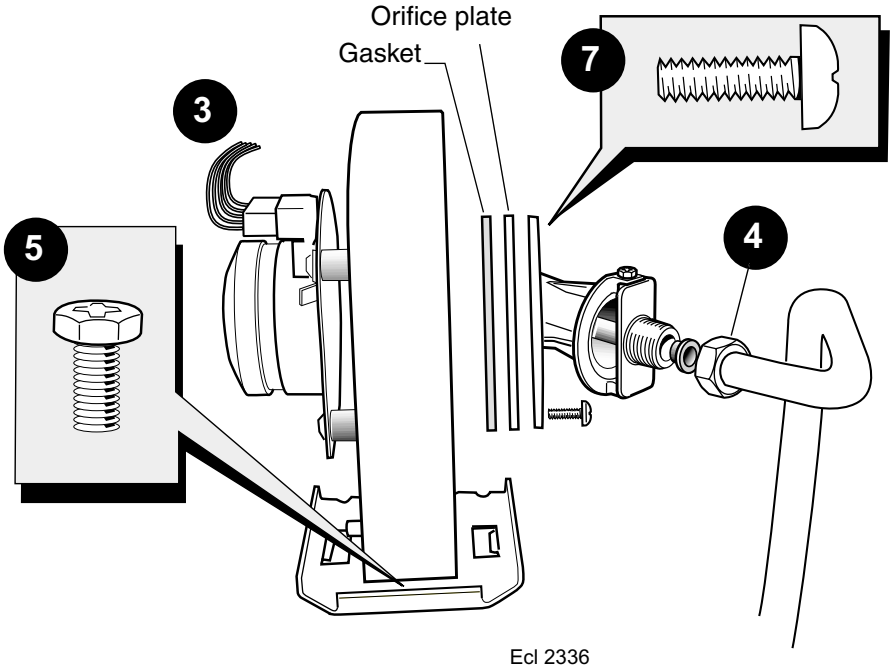

Ecl 2336

48 BURNER REPLACEMENT

1. Refer to Frame 45.
2. Remove the boiler front and sealing panels. Refer to Frames 38 & 39.
3. Remove fan assy. Refer to Frame 47.
4. Remove the 6 screws and lift off the burner from the combustion chamber. Refer to Frame 41.
5. Fit the new burner replacing any damaged or deteriorating gasket.
6. Reassemble the boiler in reverse order.
7. Check operation of the boiler. Refer to Frame 45.

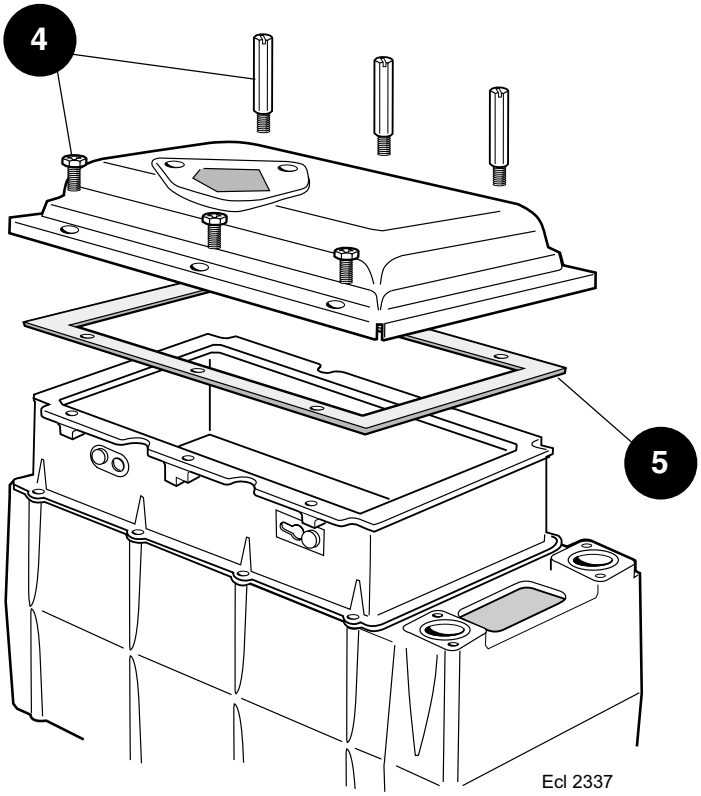

Ecl 2337

49 IGNITION ELECTRODE REPLACEMENT

1. Refer to Frame 45.
2. Remove the boiler front and sealing panels. Refer to Frames 38 & 39
3. Lower the control box, as shown in Frame 53.
4. Unplug the ignition electrode lead from the control box.
5. Remove the screw holding the ignition electrode to the combustion chamber.
6. Remove the earth lead from the ignition electrode.
7. Remove the electrode, taking care not to dislodge the grommet from the casing.

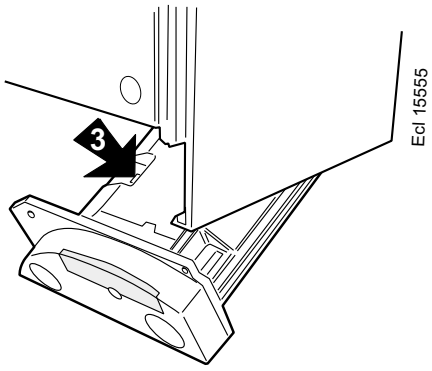

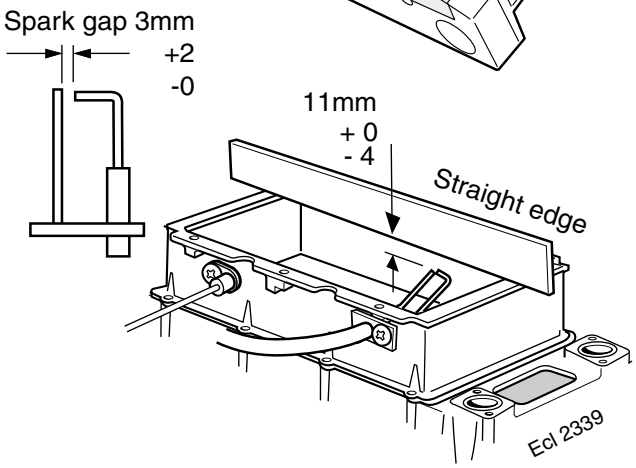

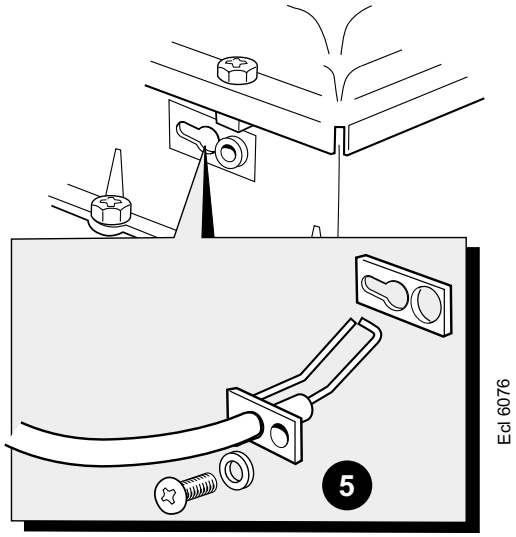

8. Fit the new ignition electrode, using the new gasket supplied. Check dimensions as shown.
9. Reassemble in reverse order.
10. Check operation of the boiler. Refer to Frame 45.

50 FLAME DETECTION ELECTRODE REPLACEMENT

1. Refer to Frame 45.
2. Remove the boiler front,bottom & sealing panels. Refer to Frames 38 & 39.
3. Swing the control box, as shown in Frame 53.
4. Unplug the flame detection electrode lead from the control box.
5. Remove the screw holding the flame detection electrode to the combustion chamber.

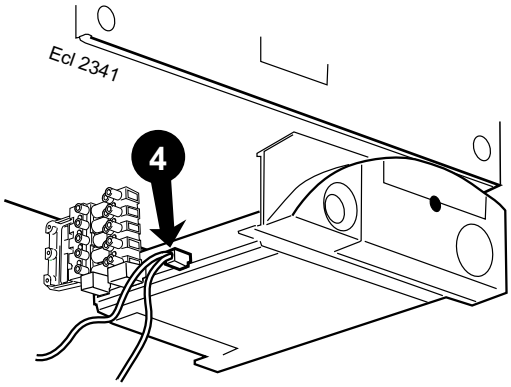

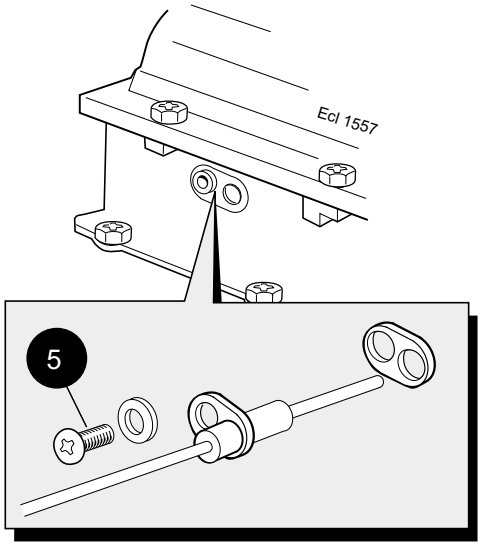

6. Remove the flame detection electrode earth lead from the earth point beneath the boiler.
7. Remove the flame detection electrode, complete with grommet.
8. Fit the new flame detection electrode, using the new gasket supplied. Check dimension as shown.
9. Reassemble in reverse order.
10. Check operation of the boiler. Refer to Frame 45.

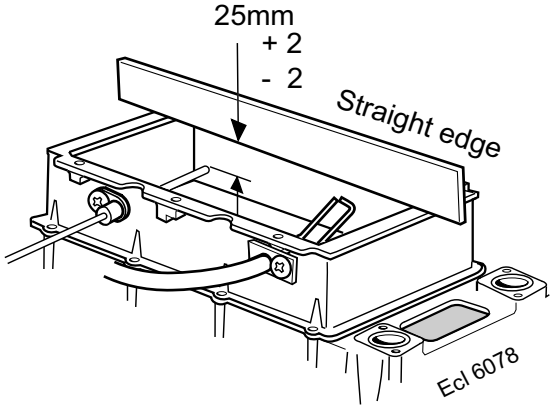

51 BURNER INJECTOR REPLACEMENT

1. Refer to Frame 45.
2. Remove the boiler front and sealing panels. Refer to Frames 38 & 39.
3. Remove the fan / venturi assembly.
4. Remove the 2 injector housing screws.
6. Withdraw the injector housing.
7. Fit the new injector housing, complete with injector.
8. Reassemble in reverse order, ensuring that the new gas seal supplied is located correctly in the injector housing.
9. Check operation of the boiler. Refer to Frame 45.

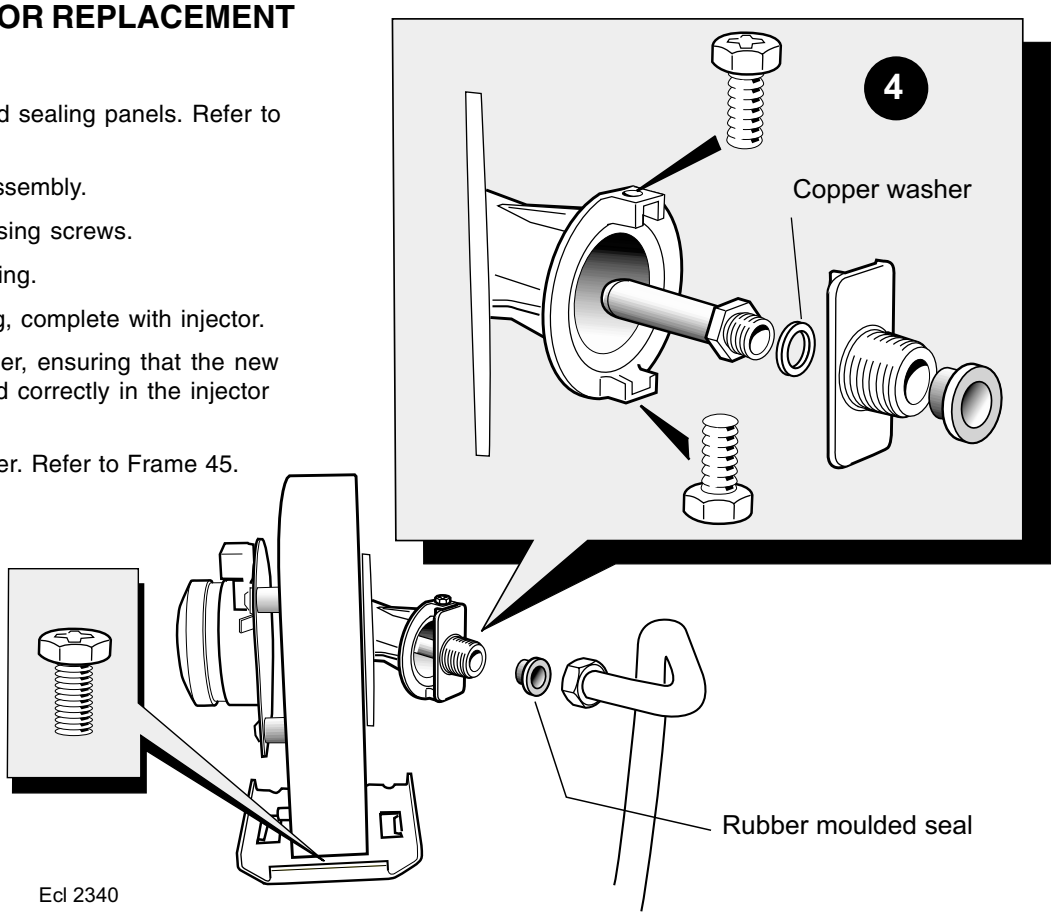

Ecl 2340

52 GAS CONTROL VALVE REPLACEMENT

1. Refer to Frame 45.
2. Remove the boiler front, bottom and sealing panels. Refer to Frames 38 & 39.
3. Unplug the electrical lead from the gas control valve and disconnect the earth wire.
4. Remove the sensing tube from the gas control valve.
5. Undo the union nut between the gas valve and the gas inlet cock.
6. Undo the union nut on the outlet side of the gas control valve.
7. Undo the gas valve bracket screw, slide the gas valve forward and remove.
8. Transfer the mounting bracket and gas inlet pipe to the new gas control valve.
9. Fit new gas control valve, ensuring that any seals showing damage or deterioration are replaced.
10. Reassemble in reverse order.
11. Ensure the sensing tubing is correctly replaced and not kinked or blocked in any way.
12. Check operation of the boiler. Refer to Frame 45.

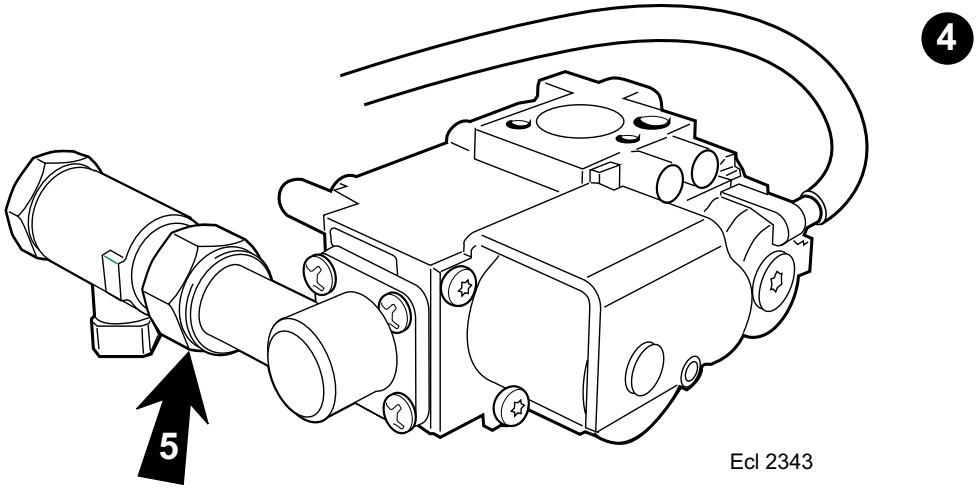

Ecl 2343

53 CONTROL BOX REPLACEMENT

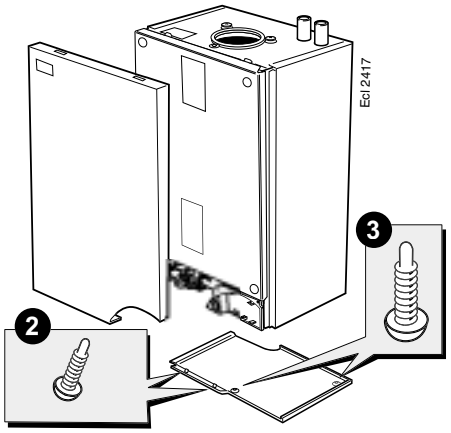

1. Refer to Frame 45.
2. Remove the front panel.
3. Remove the bottom panel.
4. Remove the 2 control box screws.
5. Carefully unplug all the electrical wiring from the control box.
6. With the control box lowered, pull the assembly forward to remove from the housing.
7. Remove the user control from the assembly.
8. Transfer the mounting brackets to the new control box.
9. Reassemble in reverse order, ensuring that the control box is located correctly in the housing before reconnecting the electrical wiring.
10. Check operation of the boiler. Refer to Frame 45.

N.B. To change the user control only.

11. Loosen the screw on the underside of the user control.
12. Pull the display unit forward to remove.
13. Push the new display unit into position.
14. Reassemble in reverse order.
15. Check the operation of the boiler. Refer to Frame 45.

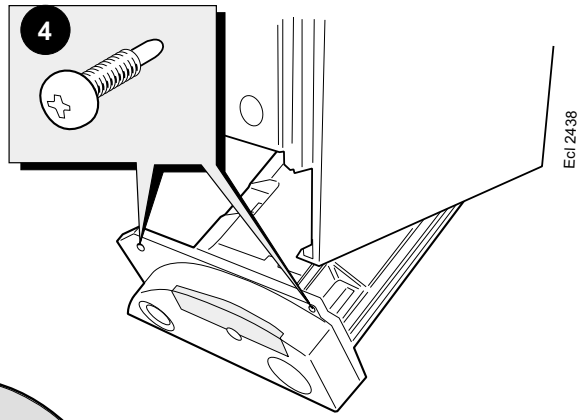

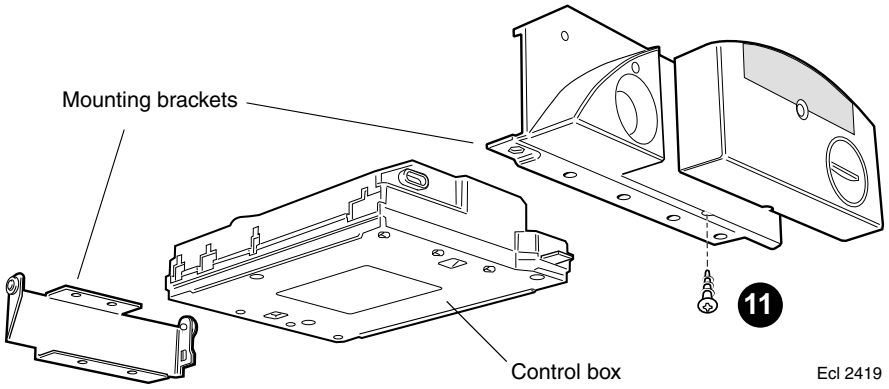

54 MAINS SWITCH REPLACEMENT

1. Refer to Frame 45.
2. Remove the boiler front and bottom panel. Refer to Frames 38 & 39.
3. Remove the 2 control box screws and lower the control box.
4. Push out the mains switch from the rear, as shown.
5. Refit the new switch, ensuring that the electrical leads are replaced on the correct terminals (refer to Frame 30) and the key on the switch is correctly aligned with the slot in the plastic moulding.
6. Reassemble in reverse order.
7. Check operation of the boiler. Refer to Frame 45.

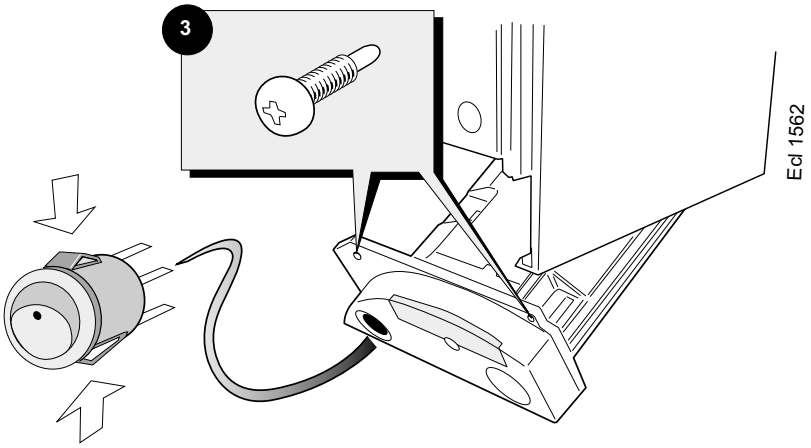

55 OVERHEAT THERMOSTAT REPLACEMENT

1. Refer to Frame 45.
2. Remove the boiler front and sealing panels. Refer to Frames 38 & 39.
3. Pull off the electrical leads from the thermostat body.
4. Pull the thermostat and clip from the pipe.
5. Fit the new thermostat, ensuring that the clip is securely holding the thermostat to the flow pipe.
6. Reassemble in reverse order.
7. Check operation of the boiler. Refer to Frame 45.

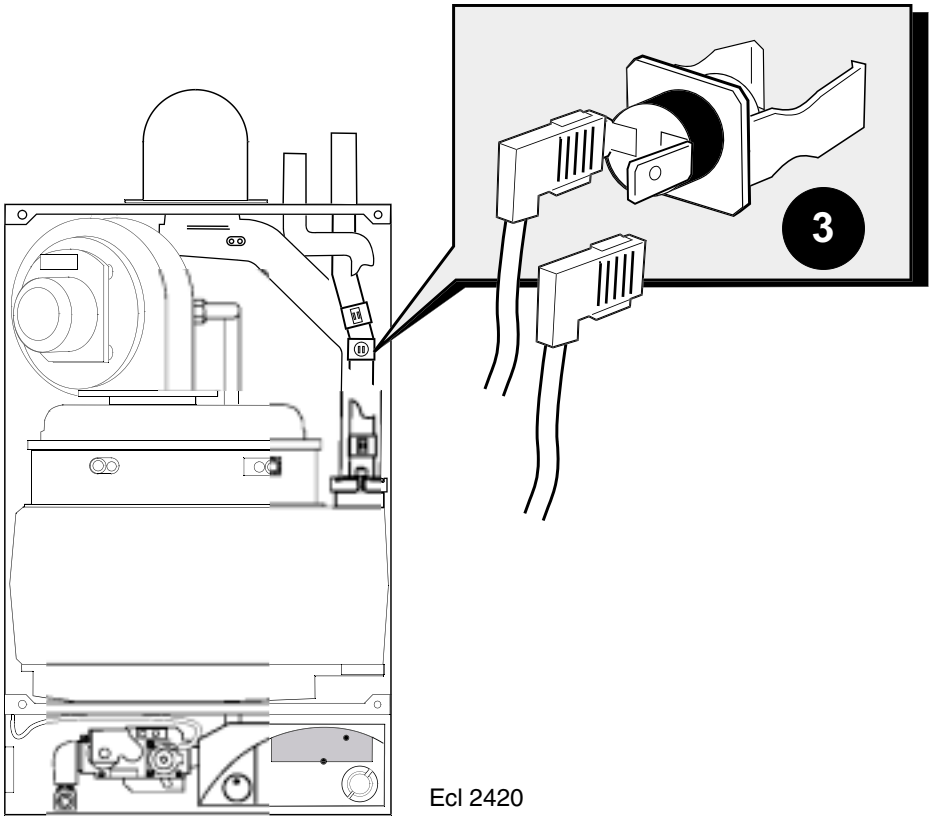

Ecl 2420

56 FLUE THERMISTOR REPLACEMENT

1. Refer to Frame 45.
2. Remove the boiler front and sealing panels. Refer to Frames 38 & 39.
3. Pull off the silicon tube from the thermistor housing.
4. Remove the aluminium nipple securing the thermistor to the flue manifold.
5. Withdraw the thermistor.
6. Unplug the inline electrical connector.
7. Fit the new thermistor, using the gasket supplied.
8. Reassemble in reverse order.
9. Check operation of the boiler. Refer to Frame 45.

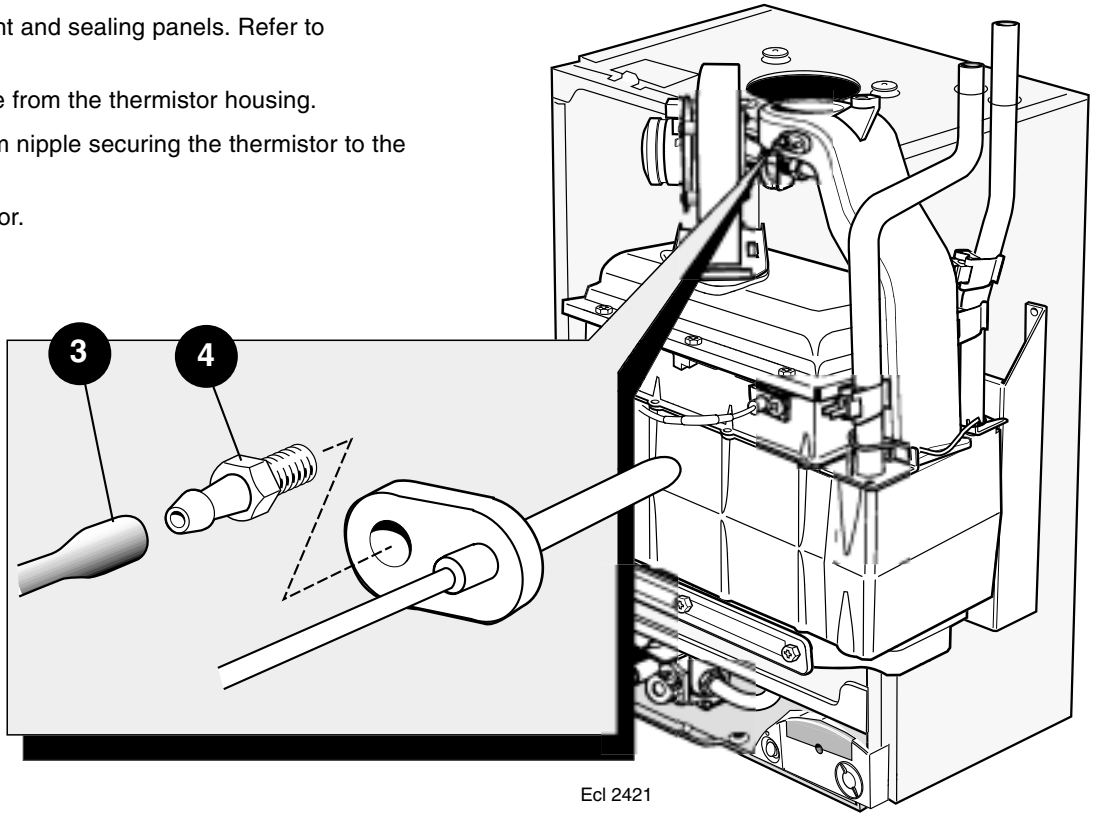

Ecl 2421

57 COMBUSTION CHAMBER INSULATION REPLACEMENT

The insulation boards used in the combustion chamber of this product are made of high temperature glass fibres with a binder of organic and inorganic materials.

Caradon Ideal Limited recommend that, for your own comfort and safety and to comply with good working practise, the procedure described below is followed:

1. Refer to Frame 45.
2. Remove the boiler front, bottom and sealing panels. Refer to Frames 38 & 39.
3. Remove the fan / venturi assembly. Refer to Frame 47.
4. Remove the burner. Refer to Frame 41.
5. Remove the screw from the ignition electrode and withdraw it from the combustion chamber
6. Remove the screw from the detection electrode and withdraw it from the combustion chamber.

Prior to removal of the board the following protective equipment should be worn:

- **Face mask supplied with the spare part**
- **Gloves supplied with the spare part**

7. Damp down the combustion chamber area containing the insulation boards.
8. Remove the split pin and washer from the RHS of the combustion chamber.
9. Remove the insulation boards. The replacement boards are supplied in a plastic bag. This bag should be retained and the discarded boards should now be placed into it.
10. Sweep any dampened particles and place in the plastic bag.
11. Fit new insulation boards.

    Note. *The boards are designed to be interlocking and should be fitted as shown.*
12. Fit the new split pin and washer in RHS of the chamber.
13. Remove the gloves and face mask and place them in the plastic bag.
14. Wash your hands and any areas of skin which may have come into contact with any of the particles from the insulation board.

    Note.
    Seal the plastic bag and dispose of it and its contents into a commercial tip.
15. Reassemble in reverse order.
16. Check operation of the boiler. Refer to Frame 45.

Fit insulation in the following order:

1. Front.
2. LH side.
3. Rear.
4. RH side.

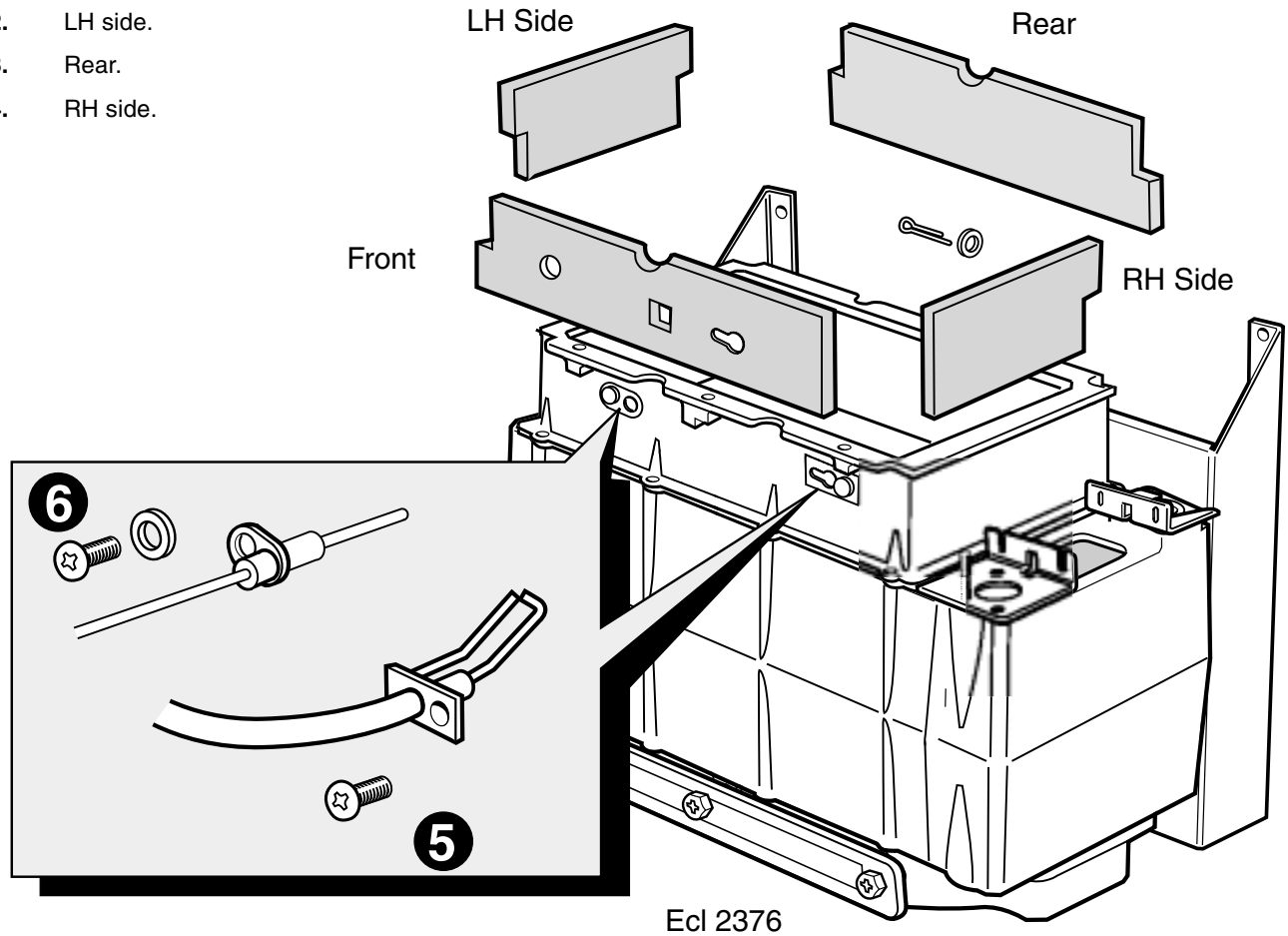

58 HEAT EXCHANGER REPLACEMENT

Refer also to Frame 10, 'Boiler exploded view'.

1. Refer to Frame 45.
2. Remove front, bottom and sealing panels. Refer to Frames 38 & 39.
3. Remove the control box and place to one side. Refer to Frame 53.
4. Attach a length of hose to the drain nipple on the bottom of the heat exchanger and drain down the boiler.
5. Remove the fan assembly and place to one side. Refer to Frame 47.
6. Remove the burner and place to one side. Refer to Frame 41.
7. Remove the ignition and detection electrodes. Refer to Frames 49 & 50.
8. Release the flue from the turret.
9. Remove the turret from the boiler. Refer to Frame 15.
10. Release the M5 nut retaining the flue casting spring clip.
11. Unscrew the M5 x 10 screw retaining the flue casting.
12. Unscrew the 2 M5 x 10 screws from the CH return pipe yoke plate.
13. Pull the CH return pipe up and out of the heat exchanger.
14. Remove the flue casing.
15. Unscrew the 2 M5 x 10 screws from the CH flow yoke plate.
16. Pull the CH flow pipe up and out of the heat exchanger.
17. Remove the condensate 'S' trap. Refer to Frame 42.
18. Unscrew the 2 M5 x 10 screws from the inter panel.
19. Slide the heat exchanger and inter panel assembly upwards to disengage and remove from the casing.
20. Transfer the interpanel to the new heat exchanger.
21. Reassemble in reverse order, replacing gaskets or seals if any sign of damage or deterioration is evident.

Note. *The heat exchanger is supplied with new combustion chamber insulation boards. These should be fitted (refer to Frame 57) before the burner and fan assembly and before the ignition and detection electrodes are replaced.*

22. Check the operation of the boiler. Refer to Frame 45.

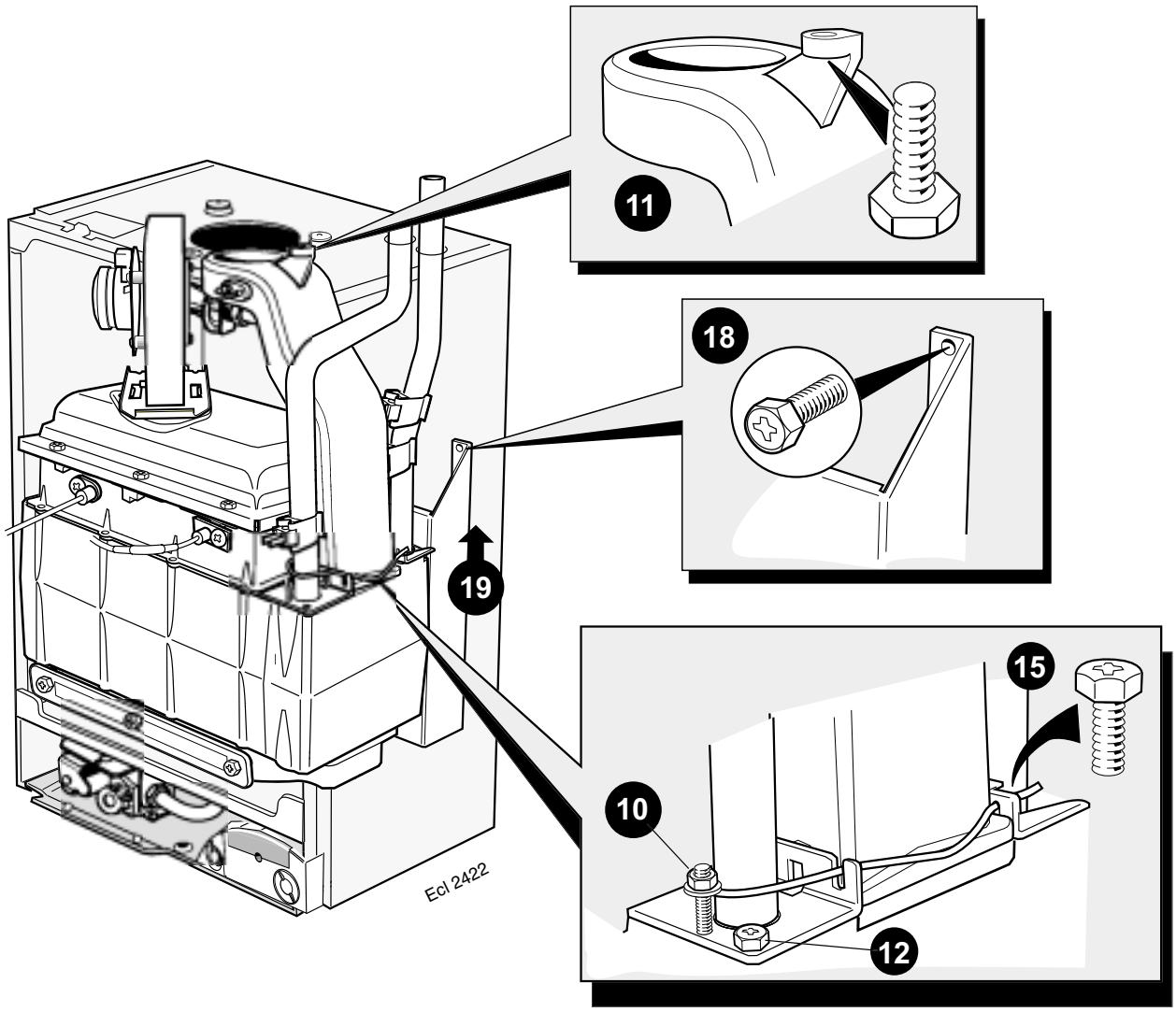

59 BOILER SEALING PANEL SEAL REPLACEMENT

1. Refer Frame 45.
2. Remove the front panel. Refer to Frame 38.
3. Remove the boiler sealing panel. Refer to Frame 39.
4. Remove the old seal from the casing and thoroughly clean the casing surfaces.
5. Fit the new adhesive seals - note that they are supplied to the correct length for the relevant sides.
6. Reassemble in reverse order.

Note.
Ensure that the boiler sealing panel is correctly seated, compressing the seal to make an airtight joint.

7. Check operation of boiler. Refer to Frame 45.

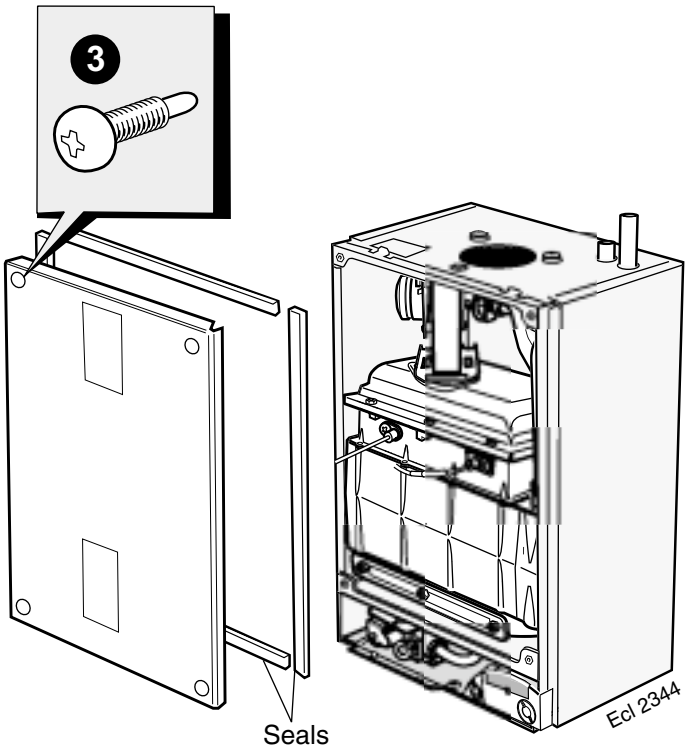

60 CONDENSATE 'S' TRAP REPLACEMENT

1. Refer to Frame 45.
2. Remove the boiler front panel. Refer to Frame 38.
3. Remove the boiler bottom panel. Refer to Frame 39.
4. Undo the plastic union nut on the condensate 'S' trap outlet.
5. Remove the 2 screws.
6. Pull the trap down and forward to remove.
7. Reassemble in reverse order, ensuring that the new trap is full of water.
8. Check operation of the boiler. Refer to Frame 45.

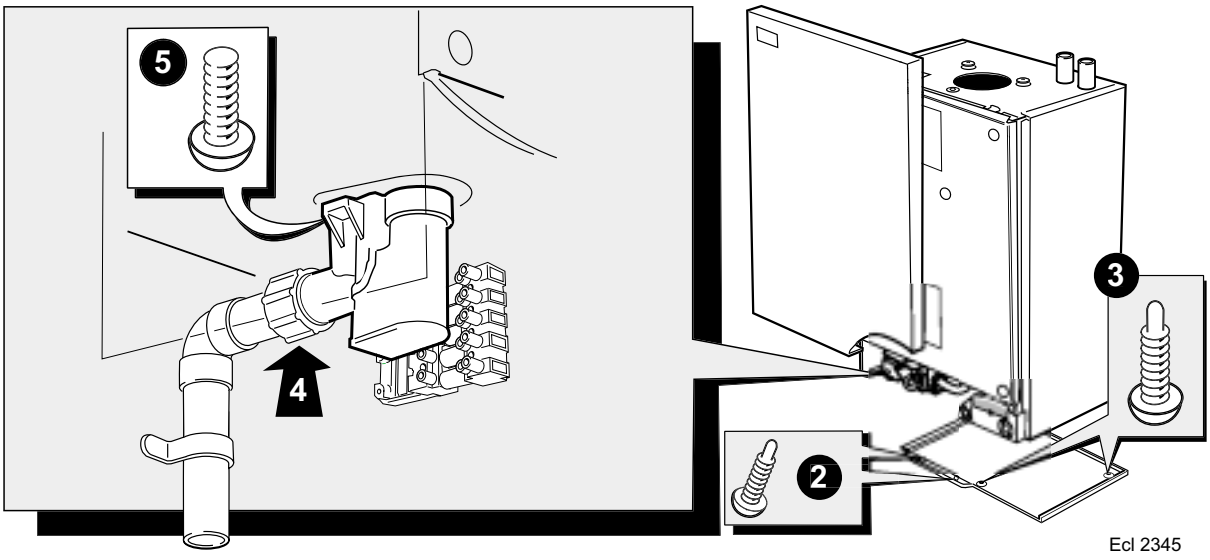

61 FAULT FINDING CHART MAIN MENU

In order to assist fault finding the boiler has an LED diagnostic display. The key to the display codes is as follows:

ALTERNATING 'L' 'F'	GO TO FRAME 62
ALTERNATING 'L' 'E'	GO TO FRAME 63
ALTERNATING 'L' 'A'	GO TO FRAME 64
ALTERNATING 'L' '8'	GO TO FRAME 65
ALTERNATING 'H' '1'	GO TO FRAME 66
ALTERNATING 'H' 'F'	GO TO FRAME 67
ALTERNATING 'H' '4'	GO TO FRAME 68
ALTERNATING 'H' 'n'	GO TO FRAME 69
ALTERNATING 'H' 'E'	GO TO FRAME 63

62 L.....F..... (FLAME ERROR)

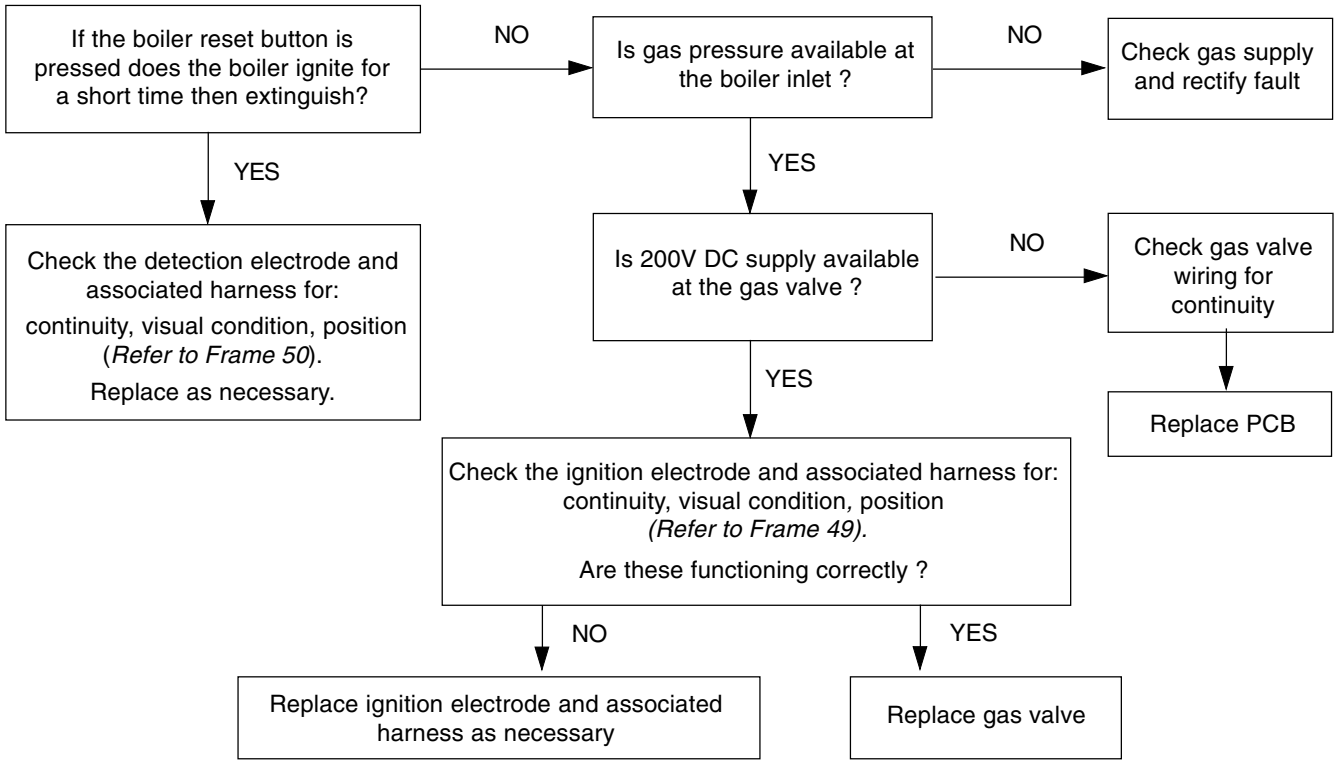

Note. *Due to the wave form of the rectified voltage the reading will vary, depending on the type of meter used to measure the value (some may measure the possible peak voltage of 339V). In general terms, a reading greater than 150V indicates that the correct voltage is supplied to the gas valve.*

63 L.....E..... or H.....E..... (BOARD ERROR)

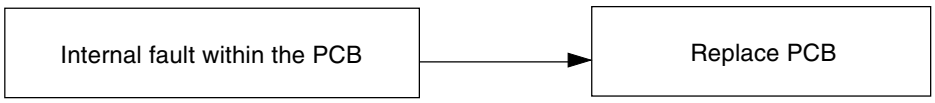

64 L.....A..... (OVERHEAT ERROR)

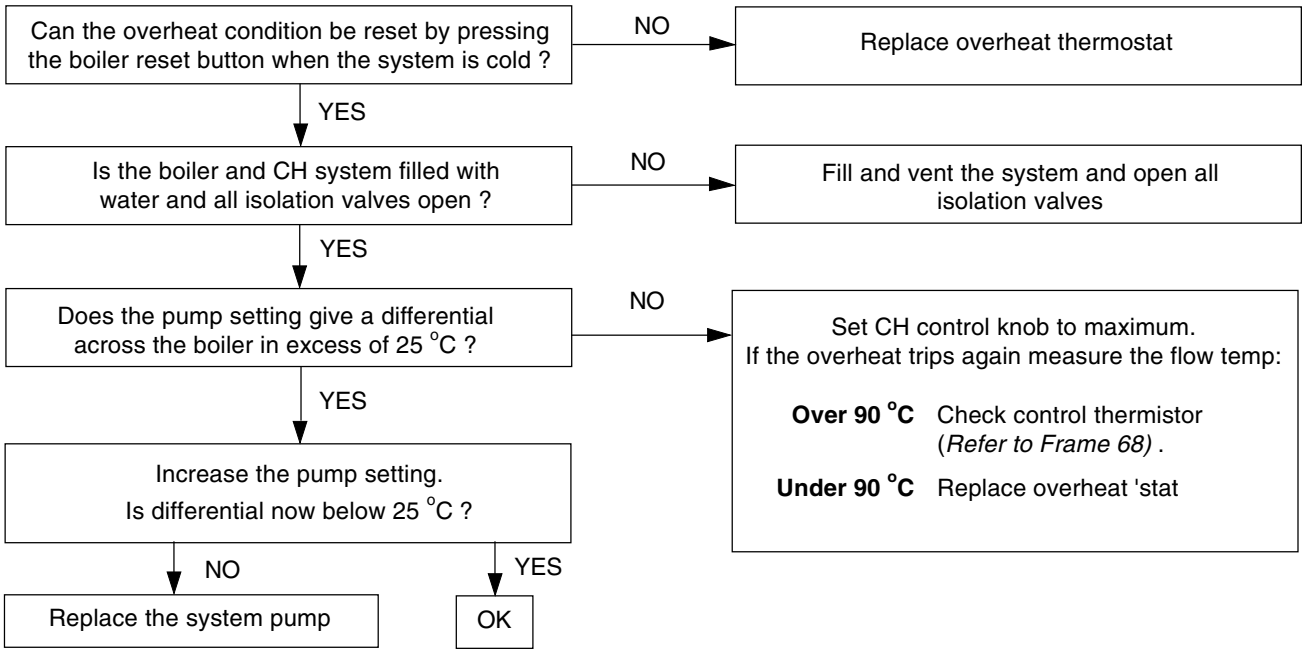

65 L....8..... (FAN ERROR)

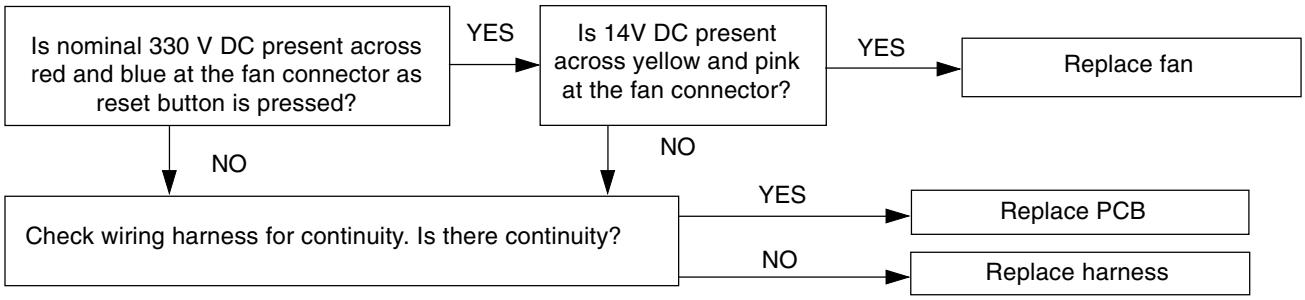

66 H.....1..... (FLOW THERMISTOR ERROR)

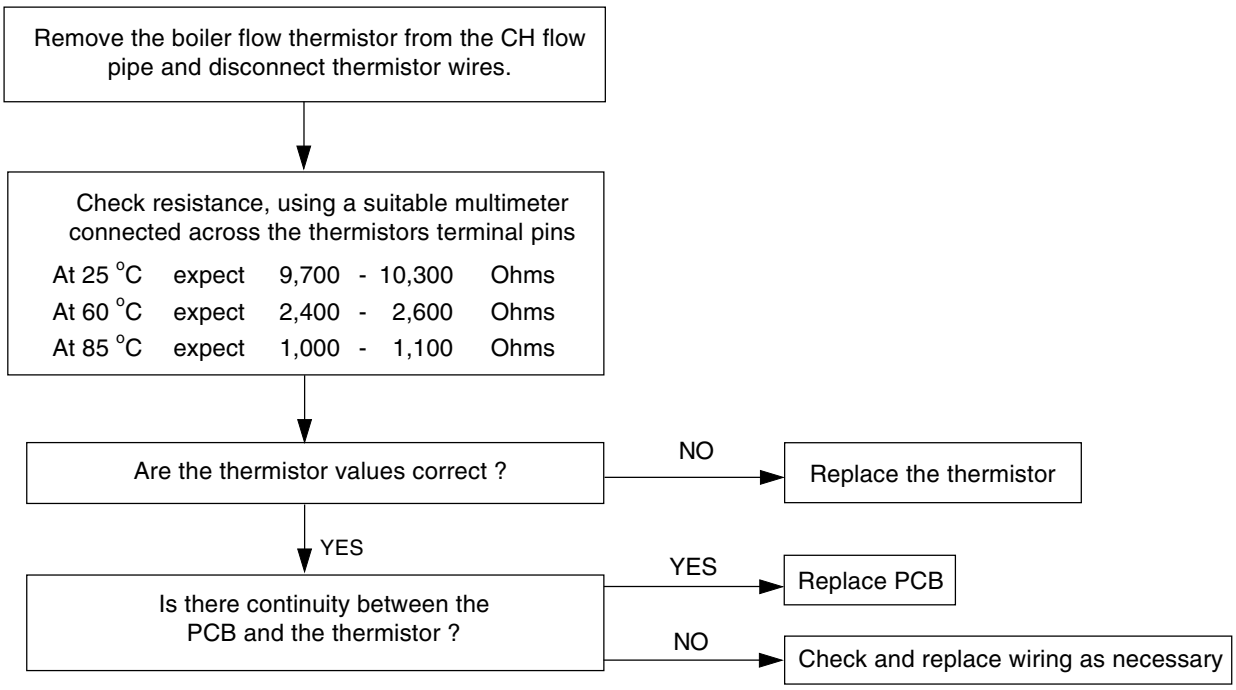

67 H.....F..... (FLAME DETECTION - SHORT CIRCUIT ERROR)

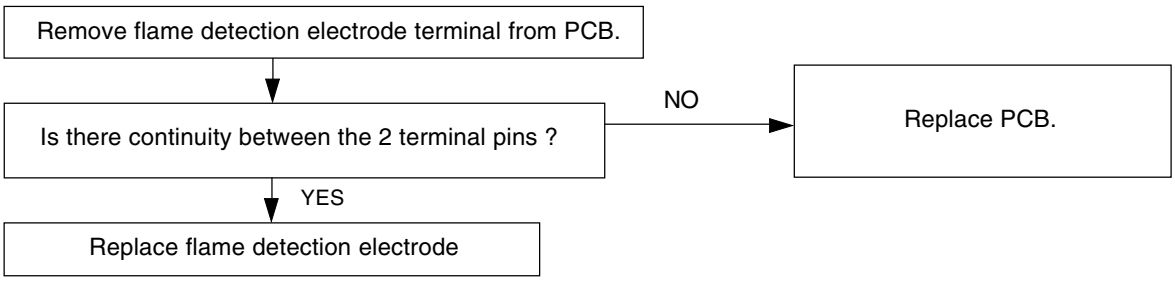

68 H.....4..... (FLUE THERMISTOR ERROR)

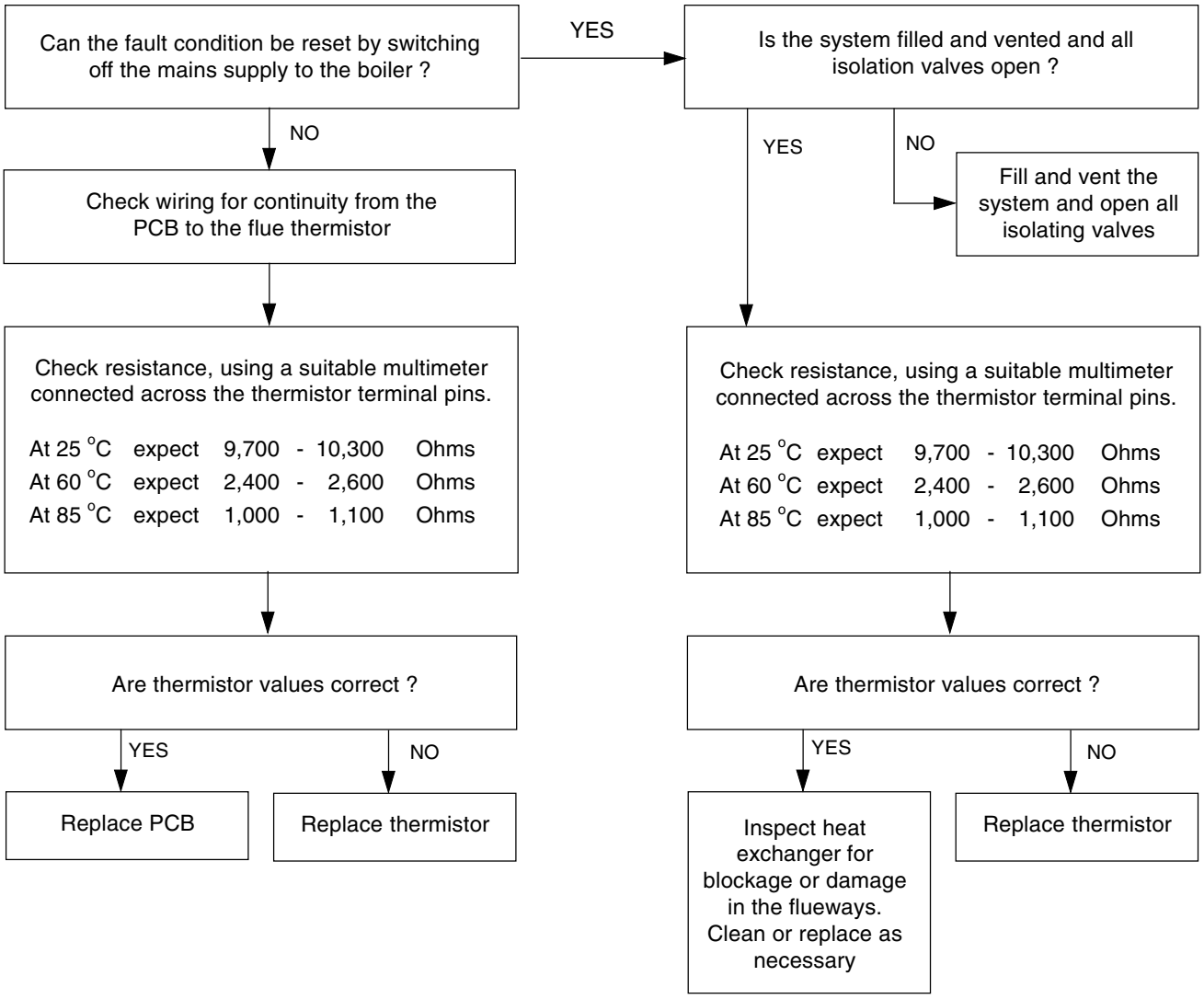

69 H.....n..... (PHASE REVERSAL ERROR)

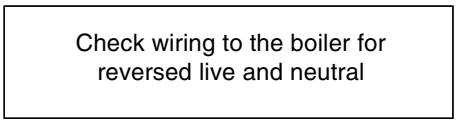

SHORT LIST OF PARTS

The following are parts commonly required due to damage or expendability. Their failure or absence is likely to affect safety or performance of this appliance.

The list is extracted from the British Gas List of Parts, which contains all available spare parts.

The full list is held by British Gas Services, **Caradon Ideal Limited** distributors and merchants.

When ordering spares please quote:

1. Boiler Model
2. Appliance G.C. Number
3. Description
4. Quantity
5. Product Number

When replacing any part on this appliance use only spare parts that you can be assured conform to the safety and performance specification that we require. Do not use reconditioned or copy parts that have not been clearly authorised by Ideal Boilers Limited.

Key No.	GC Part No.	Description	Qty.	Product No.
1	E67-471	Front casing panel	1	170 897
4	E67-482	Bottom casing panel	1	170 900
11	E67-489	Burner	1	170 905
12	E85-096	Combustion chamber insulation	1	172 626
14	E67-492	Injector and housing	1	170 908
16	E85-097	Fan assembly	1	172 625
19	E69-288	Gas control valve	1	170 913
22	E67-500	Flue thermistor	1	170 916
23	E67-501	Control thermistor	2	170 917
24	E67-502	Overheat thermostat	1	170 918
25	E67-503	Ignition electrode and gasket	1	170 919
26	E67-504	Flame detection electrode and gasket	1	170 920
32	E67-511	Condensate ‘S’ trap	1	170 926
34	E65-515	Controls hinge bracket kit	1	170 928
35	E65-517	User controls	1	170 929
36	E85-103	PCB primary controls (include plastic housing)	1	172 490
37	E67-519	Fuse PCB (3.15A L 250V)	1	170 931
39	E67-521	Main switch	1	170 933
45	E65-527	Gasket kit	1	170 938
52	E68-376	Seal kit - sealing panel	1	171 014
53	E68-380	Turret gasket	1	171 022

70 SHORT LIST

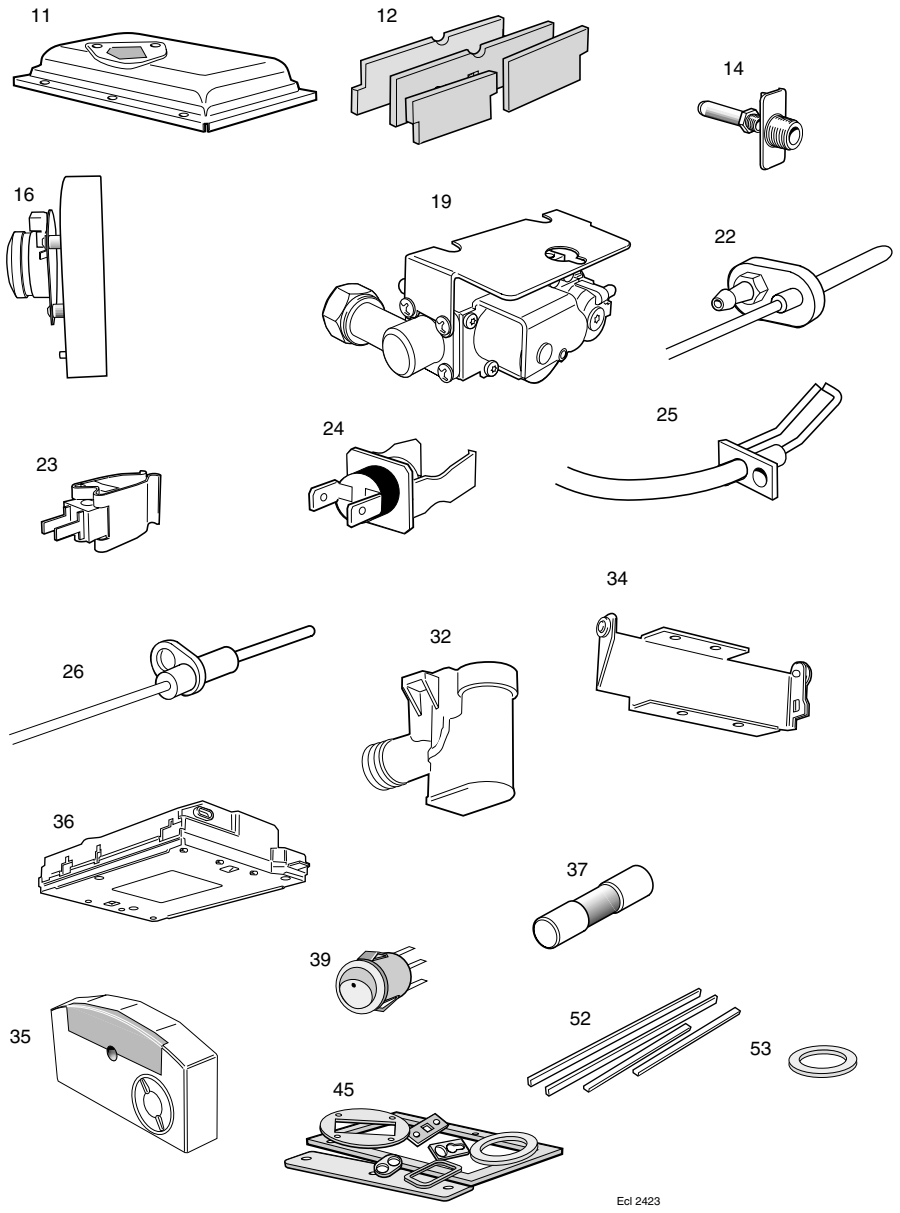

71 BOILER CASING ASSEMBLY

1. Front casing panel with screws.
2. Sealing panel with screws.
4. Bottom casing panel with screws.

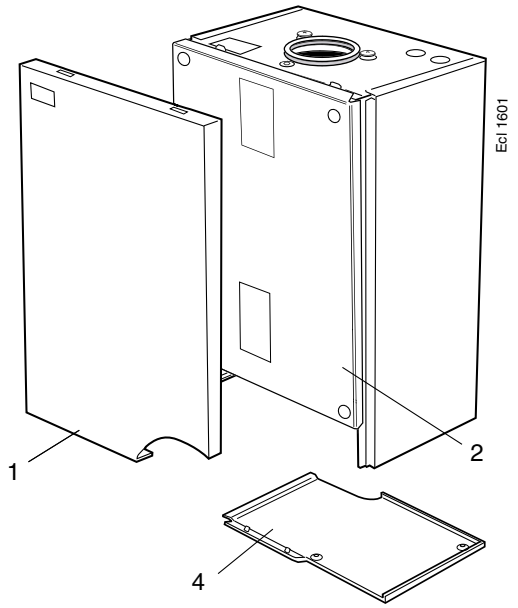

72 CONTROLS ASSEMBLY

33. Controls assy with screws.

34. Controls hinge bracket.

35. User controls (without item 38).

36. PCB (primary controls).

38. User control housing

39. Mains switch.

54. Jumper link.

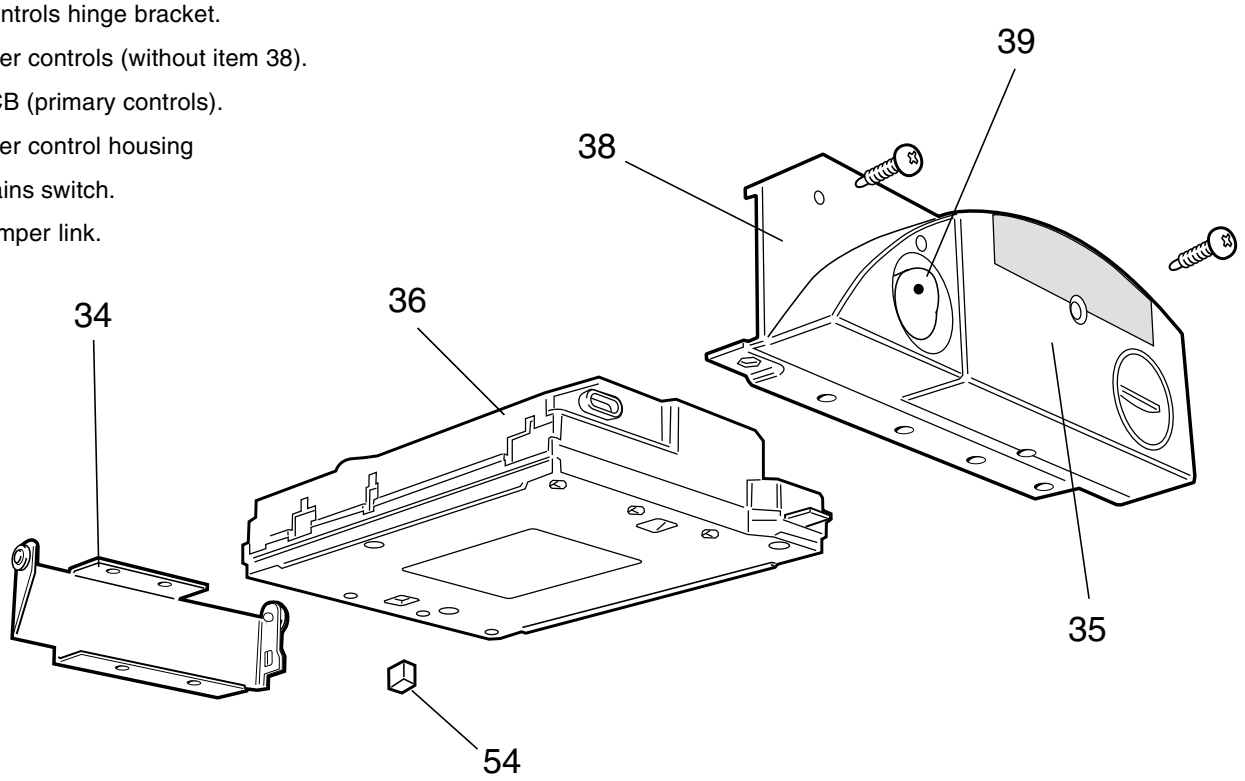

Ecl 1600

73 BURNER ASSEMBLY

11. Burner assembly with screws and gasket.

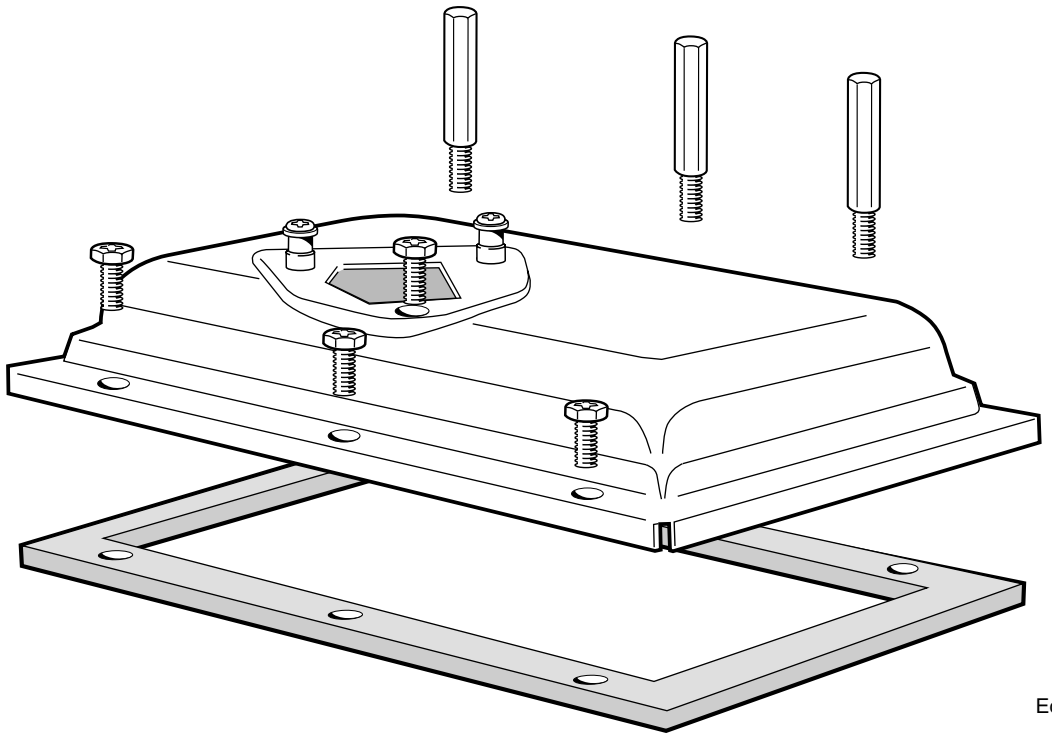

Ecl 1598

benchmark™

The code of practice for the installation, commissioning & servicing of central heating systems

Technical Training

The Ideal Boilers Technical Training Centre offers a series of first class training courses for domestic, commercial and industrial heating installers, engineers and system specifiers.
For details of courses please ring: 01482 498 432

CERTIFIED PRODUCT
Manufactured under a BS EN ISO 9001: 1994
Quality System accepted by BSI

Ideal Boilers, P.O. Box 103, National Ave, Kingston upon Hull, HU5 4JN. Telephone: 01482 492 251 Fax: 01482 448 858. Registration No. London 322 137.

Caradon Ideal Limited pursues a policy of continuing improvement in the design and performance of its products. The right is therefore reserved to vary specification without notice.

CE

Ideal BOILERS
ENGINEERED FOR PEACE OF MIND

July 2003 155 695 A08

Caradon
Ideal Limited

Ideal Installer/Technical Helpline: 01482 498 663
www.idealboilers.com