THE IDEAL INSTALLATION & SERVICING MANUAL

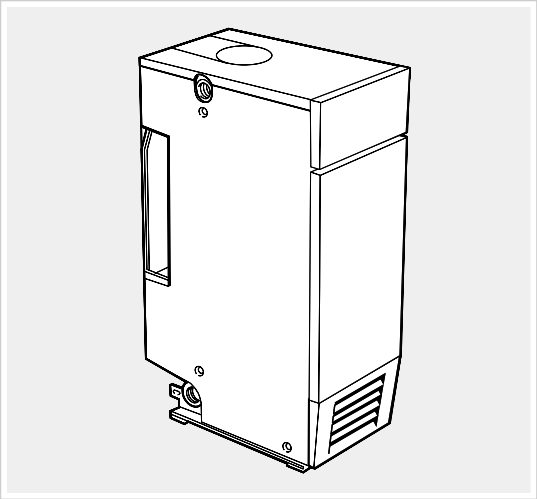

mexico

the floor standing boiler

Floor standing,
gas fired, conventional
flue system boiler

Mexico Slimline
CF3/40 & 3/50

Ideal BOILERS

Installers guide to domestic central heating boilers

Mexico:
The Floor Standing Gas Boiler

The Ideal Mexico is a range of cast iron floor standing gas central heating boilers. Both balanced or conventional flue versions are available. A complete range of both natural gas and propane models. The range offers Super models and, for when space is tight, there are Slimline models available.

Mexico: Britain's biggest selling floor standing boiler

The ideal replacement boiler...
Easy to install, easy to operate and easy to service. The Ideal Mexico really is the ultimate replacement floor standing range - you can depend on it.

Proven reliability...
Proven cast iron heat exchanger engineered and refined to be the most dependable floor standing boiler ensuring totally calm operation and quiet running, whatever the system demands.

Complete range...
27 models, including 4 Slimline models at only 250mm wide and 8 propane Super models. Option kit availability includes an easy to use programmer kit available on all models, an overheat thermostat kit for all models and a pump kit that can be housed within the casing, available for all models except the Super CF 3/140 & CF 3/140P.

Full system suitability...
All models are suitable for connection to pumped open vent central heating systems, pumped central heating combined with pumped or gravity indirect domestic hot water supply systems. They can also be used on sealed water systems when used in conjunction with the optional Overheat Thermostat Kit.

Free Guarantee: 1st Year Ideal Care
The home owner is entitled to 12 months free Ideal Care, which includes both parts and labour, to restore the boiler to full function. Please encourage the home owner to complete and return the registration form in their Householder's pack within 30 days of installation.

Optional Extra Year Cover with Ideal Care
You may wish to offer your own annual service plan or you may wish to advise the home owner to complete their application form for the appropriate level of extended Ideal Care - Silver, Gold or Platinum. Full details are available in the Ideal Care brochure.

CAUTION. To avoid the possibility of injury during the installation, servicing or cleaning of this appliance, care should be taken when handling edges of sheet steel components.

GENERAL

Table 1 - General Data

Boiler Size			CF 3/40	CF 3/50
Gas Supply Connection		in. BSP	Rc 1/2 (1/2)	
Flow and Return Connections			Rc 1 (1" BSP)	
MAXIMUM Static Water Head		m (ft.)	30.5 (100) (3 bar)	
MINIMUM Static Water Head		m (ft.)	1.0 (3.3)	
Electrical Supply		power consumption	230 V ~ 50 Hz 5W	
External Fuse Rating			3 A	
Water Content		litre (gal.)	20 (4.4)	
Dry Weight *excluding* balanced flue terminal		kg. (lb.)	94 (207)	
Boiler Size	Height	mm (in.)	850 (33.5)	
	Width	mm (in.)	255 (10.0)	
	Depth	mm (in.)	535 (21.0)	
Gas Type			Natural 2 H	
Gas Supply Pressure			20 mb	

Table 2 - Performance Data

Boiler Size			CF 3/40	CF 3/50
Boiler Input	MINIMUM	kW (Btu/h)	11.3 (38 700)	15.0 (51 100)
	Gas Consumption	l/s (ft.^{3}/h)	0.29 (37)	0.39 (49)
	MID	kW (Btu/h)	13.2 (44 900)	17.0 (57 900)
	Gas Consumption	l/s (ft.^{3}/h)	0.34 (43)	0.44 (56)
	MAXIMUM	kW (Btu/h)	14.9 (50 800)	18.7 (63 700)
	Gas Consumption	l/s (ft.^{3}/h)	0.38 (49)	0.48 (61)
Boiler Output to Water	MINIMUM	kW (Btu/h)	8.8 (30 000)	11.7 (40 000)
	MID	kW (Btu/h)	10.3 (35 000)	13.2 (45 000)
	MAXIMUM	kW (Btu/h)	11.7 (40 000)	14.7 (50 000)
Burner Setting	MINIMUM	mbar (in w.g.)	6.3 (2.5)	7.8 (3.1)
Pressure (hot)	MID	mbar (in w.g.)	9.0 (3.6)	10.3 (4.1)
	MAXIMUM	mbar (in w.g.)	11.2 (4.5)	12.5 (5.0)
Flue gas flow rate (maximum)		g/s	7.0	8.8
Flue gas temperature		^{o}C	94	118
*Seasonal Efficiency		(SEDBUK) %	70.5	71.4

*The value is used in the UK government's Standard Assessment Procedure (SAP) for energy rating of dwellings.
The test data from which it has been calculated have been certified by BGplc 0087)

Note.

Gas consumption is calculated using a calorific value of 38.7 MJ/m^3 (1038 Btu/ft^3) gross or 34.9 MJ/m^3 (935 Btu/ft^3) nett

To obtain the gas consumption at a different calorific value:-

a. *For l/s - divide the gross heat input (kW) by the gross C.V. of the gas (MJ/m^3).*

b. *For ft^3/h - divide the gross heat input (Btu/h) by the gross C.V. of the gas (Btu/ft^3).*

Key to symbols

GB = United Kingdom **IE** = Ireland (Countries of destination)

PMS = Maximum operating pressure of water

B_{11BS} = An appliance designed for connection to a flue discharging the products of combustion outside the room, with air for combustion being drawn directly from the room where the appliance is installed, without a fan in the combustion products circuit and fitted with a combustion products discharge safety device.

I_{2H} = An appliance designed for use on 2nd Family gas, Group H only.

CONTENTS

Air Supply 7

Boiler Assembly - Exploded view 9

Boiler Clearances 6

Burner Assembly - Exploded view 34

Electrical Connections 15

Electrical Diagrams 15

Electrical Supply 8

Fault Finding 31

Flue Connection 15

Flue Installation 7

Frost Protection 18

Gas Safety Regulations 5

Gas Supply 6

Initial Lighting 20

Installation 9

Mandatory Requirements 5

Pump 13

Servicing 22

Short List of Parts 32

System Electrical Diagrams 17

Thermostatic Radiator valves 8

TTB Thermostat 7

Water Circulation 7

Water Systems 13

Water Treatment 8

Mexico Slimline

Mexico Slimline CF 3/40	G.C. No. 41 348 01
Mexico Slimline CF 3/50	G.C. No. 41 348 03

B.G. Certified - P.I. No. 87 AT 15

Destination Countries: GB and IE

Natural Gas only — Appliance type: B_{11} BS

INTRODUCTION

The Mexico Slimline range is of floor standing, conventional flue gas boilers. They are range-rated to provide central heating outputs of:

CF 3/40 8.8 kW (30,000 Btu/h) to 11.7 kW (40,000 Btu/h).

CF 3/50 11.7 kW (40,000 Btu/h) to 14.7 kW (50,000 Btu/h).

The boiler has a cast iron heat exchanger and is supplied fully assembled, complete with a white enamelled mild steel casing.

The boiler thermostat control is located behind the upper front panel (drop down door).

The boilers are suitable, as standard, for connection to open-vented systems ONLY.

The systems may be:

- pumped or gravity circulating indirect DHW only
- pumped central heating only
- pumped central heating combined with either a pumped or gravity circulating indirect DHW circuit.

OPTIONAL EXTRA KITS

Programmer Kit	Fits neatly within the casing. Separate fitting instructions are included with this kit.
Overheat Thermostat Kit	Available to allow the boiler to be used on sealed water systems.

NOTE TO THE INSTALLER: LEAVE THESE INSTRUCTIONS ADJACENT TO THE GAS METER. ALSO COMPLETE THE BENCHMARK LOG BOOK AND GIVE THIS TO THE CUSTOMER.

benchmark™

GAS SAFETY

Gas Safety (Installation and Use) Regulations 1994, amendments 1996 or rules in force.

It is law that **all** gas appliances are installed by a CORGI registered installer (identified by ❀) in accordance with the above regulations. Failure to install appliances correctly could lead to prosecution. It is in your own interest, and that of safety, to ensure the law is complied with.

The installation of the boiler MUST also be in accordance with the latest I.E.E. (BS 7671) Wiring Regulations, local building regulations, bylaws of the local water authority, the Building Regulations and Building Standards (Scotland) and any relevant requirements of the local authority.

Detailed recommendations are contained in the following British Standard Codes of Practice:

BS. 6891	Low pressure installation pipes.
BS. 6798	Installation of gas fired hot water boilers of rated input not exceeding 60 kW.
BS. 5449:1	Forced circulation hot water systems (small bore and microbore domestic central heating systems).
BS. 5546	Installation of gas hot water supplies for domestic purposes (2nd Family Gases).
BS. 5440: 1	Flues for gas appliances of rated input not exceeding 60 kW.
BS. 5440: 2	Ventilation for gas appliances of rated input not exceeding 60 kW.
BS 7593	Treatment of water in Domestic Hot Water Central Heating Systems.

Health and Safety Document No. 635.

The Electricity at Work Regulations, 1989.

Manufacturer's notes must NOT be taken in any way as overriding statutory obligations.

IMPORTANT. These appliances are certificated by the British Standards Institution for safety and performance. It is important, therefore, that no external control devices, e.g. flue dampers, economisers etc., are directly connected to these appliances unless covered by these Installation and Servicing Instructions or otherwise recommended by **Caradon Plumbing Limited** in writing. If in doubt please enquire.

Any direct connection of a control device not approved by **Caradon Plumbing Limited** could invalidate the BSI Certification and the normal appliance warranty. It could also infringe the Gas Safety Regulations and the above regulations or other statutory requirements.

LOCATION OF BOILER

The boiler must be installed on a flat and level floor, capable of adequately supporting the weight of the boiler and any ancillary equipment.

The boiler may be fitted on a combustible floor.

Insulation is not necessary, unless required by the local authority.

The boiler must not be fitted outside.

The boiler must not be installed in a bedroom or in a room containing a bath or shower.

1 BOILER WATER CONNECTIONS

1. This appliance is NOT suitable for use in a direct hot water system.
2. If the boiler is to be used on a sealed system, an **Overheat Thermostat Kit** is available and must be installed in accordance with the instructions supplied with the kit.
3. All water connections are Rc1 (1" BSP). The front top and bottom plugged connections must not be used. 2 spare blanking off plugs are provided, in the hardware pack, for use as necessary in the rear flow or return water connections.
4. Pipework connections to all systems may use flow and return connections on the same side, or opposite sides of the boiler.

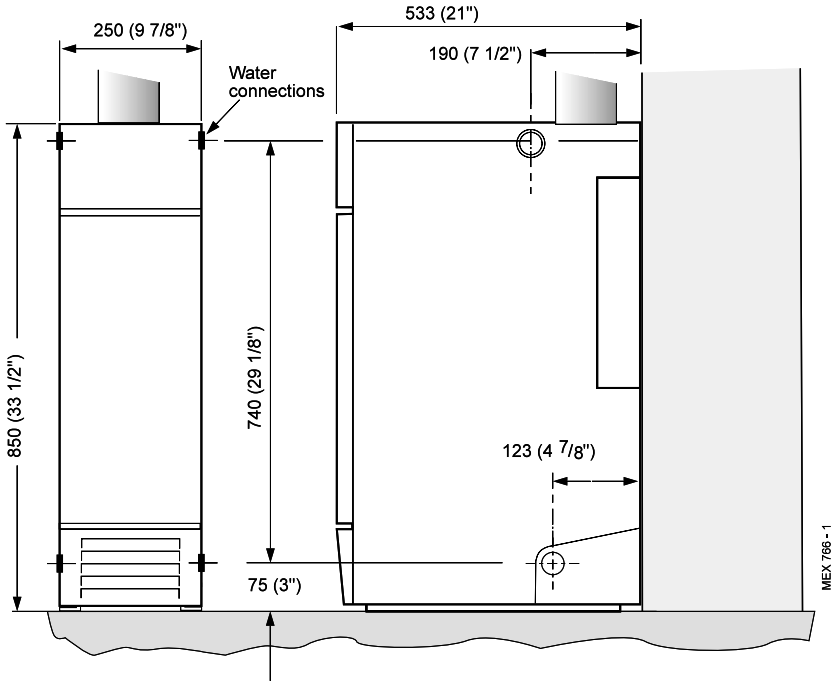

That is:

Fully pumped system

In a fully system, either a LH or a RH flow connection, together with LH or RH return connection, may be used.

Gravity domestic hot water and pumped central heating.

In a gravity DHW and pumped CH system separate flow and return connections are used for each service.

The use of a cylinder thermostat is recommended. This will prevent excessive domestic hot water temperatures.

Timber Framed Buildings

If the boiler is to be fitted in a timber framed building it should be fitted in accordance with the Institute of Gas Engineering document IGE/UP/7:1998.

Compartment Installations

A compartment used to enclose the boiler MUST be designed and constructed specially for this purpose.
An existing cupboard or compartment may be used, providing it is modified for the purpose.

Details of essential features of cupboards/compartment design, including airing cupboard installation, are to conform to the following:

- BS. 6798.
- The position selected for installation MUST allow adequate space for servicing in front of the boiler and for air circulation around the boiler.
- This position MUST also permit the provision of a satisfactory flue and an adequate air supply.
- For the minimum clearances required for safety, and subsequent service, see Frame 2.

GAS SUPPLY

The local gas supplier should be consulted, at the installation planning stage, in order to establish the availability of an adequate supply of gas. An existing service pipe must NOT be used without prior consultation with the local gas supplier.

The boiler is to be installed only on a gas supply with a governed meter.

A gas meter can only be connected by the local gas supplier or by a local regional contractor.

Check that the appliance is suitable for the proposed gas supply. An existing meter should be checked, preferably by the gas supplier, to ensure that the meter is adequate to deal with the rate of gas supply required. A **minimum** gas pressure of 20mbar MUST be available at the boiler inlet, with the boiler operating.

Installation pipes MUST be fitted in accordance with BS. 6891. Pipework from the meter to the boiler MUST be of an adequate size. Do not use pipes of a smaller size than the boiler gas connection.

The complete installation MUST be tested for gas soundness and purged as described in the above code.

2 FLOOR MOUNTING AND BOILER CLEARANCES

Flammable materials must not be placed in close proximity to the appliance. Materials giving off flammable vapours must not be stored in the same room as the appliance.

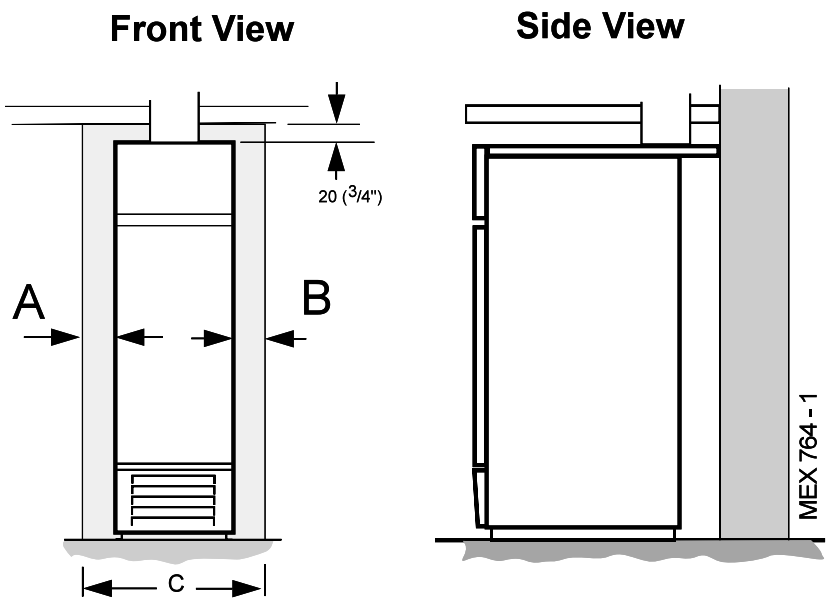

FLOOR MOUNTING

1. The floor must be flat, level and of suitable load bearing capacity.
2. The back of the boiler may be fitted up to the wall.

BOILER CLEARANCES

The minimum overall dimensions of the space in which the boiler is to operate and to facilitate servicing are as follows:

Boiler Clearances	Top	One side 'A' or 'B'	Aggregate 'A' + 'B'	Total Width C
CF 3/40 & CF 3/50	20 (3/4")	25 (1")	100 (4")	350 (14")

IMPORTANT.

A MINIMUM clearance of 25mm (1") MUST also be maintained between the flue pipe and any adjacent combustible material.

In addition a MINIMUM clearance of 533 mm (21") MUST be available at the front of the boiler, for servicing.

FLUE INSTALLATION

The flue must be installed in accordance with the recommendations of BS. 5440:1.

The following notes are intended for general guidance:

1. The cross-sectional area of the flue, serving the boiler, MUST NOT be less than the area of the flue outlet of the boiler.

   If flue pipe is to be used it MUST NOT be less than the diameter of the flue outlet connection on the boiler.

2. Flue pipes and fittings should be constructed from one of the following materials:

   a. Aluminium or stainless steel.

   b. Cast iron, coated on the inside with acid resistant vitreous enamel.

   c. Other approved material.

3. If twin walled flue pipe is used it should be of a type acceptable to British Gas.

4. If a chimney is to be used it should preferably be one that is composed of, or lined with, a non-porous acid resistant material.

   Notes.
   Chimneys lined with salt -glazed earthenware pipes are acceptable if the pipes comply with BS.65 and BS.5440:1.

   A flue pipe constructed from one of the materials listed in 2 a-c should form the initial connection to the lined chimneys.

   *Where a chimney is to be used that is **not** composed of, or lined with, a non-porous, acid resistant material it should be lined with a stainless steel flexible flue liner which complies with BS.715.*

5. Before connecting the boiler to, or inserting a liner into, a flue that has been previously used then the flue MUST be thoroughly swept clean of any soot or loose material. If a register plate, restrictor plate or damper etc., is fitted in the flue then it MUST be removed before connecting the boiler to, or inserting a liner into, the flue.

6. The flue should terminate in accordance with the relevant recommendations given in BS.5440:1.

7. The flue MUST be fitted with a terminal (or ridge tile up to 5" flue diameter). The terminal shall be of a type which has been tested and found satisfactory by British Gas. This terminal must NOT be installed within 600mm (24") of an opening window, air vent or any other ventilation opening.

8. The chimney / flue lining MUST be sealed at both the top and the bottom.

IMPORTANT. It is absolutely ESSENTIAL to ensure, in practice, that the flue discharge is in a downdraught- free zone and that products of combustion discharging from the terminal cannot re-enter the building or any other adjacent building through ventilators, windows, doors, other sources of natural air infiltration or forced ventilation / air conditioning systems.

TTB DOWNDRAUGHT THERMOSTAT

This appliance is fitted with a TTB downdraught thermostat for added safety and protection. If this thermostat should operate and switch off the appliance it is because the flue is subject to downdraught, probably as a result of adverse wind conditions .

The TTB is an automatic reset thermostat which will reset once the wind conditions have returned to normal, subject to a built-in reset delay in excess of 10 minutes

The TTB is an important safety device and must not be put out of action or interfered with in any way.

This device in not a substitute for an independently mounted carbon monoxide detector.

In cases of repeated or continuous shutdown a competent person should be called to investigate and rectify the condition causing this and carry out an operational test after each intervention on the device. Only the manufacturer's original parts should be used for replacement.

AIR SUPPLY

Detailed recommendations for air supply are given in BS.5440:2. The following notes are for general guidance:

1. The room or internal space in which the boiler is installed MUST have, or be provided with, a permanent air vent. This vent MUST be either direct to outside air or to an adjacent room or internal space which must itself have, or be provided with, a permanent air vent at least the same size direct to outside air.

   The minimum effective area of the permanent air vent(s) are specified below and are related to maximum rated heat input of the boiler (see Table 3).

   The air vent(s) must NOT have provision for closing or adjustment and should be sited to avoid risk of accidental damage or blockage.

   If other methods of ventilation are envisaged, British Gas should be consulted before proceeding.

   Table 3

Boiler size	CF 3/40	CF 3/50
Effective area cm² (in.²)	38 (6)	63 (10)

2. If the boiler is to be installed in a cupboard or compartment, permanent air vents are required (for combustion, flue dilution and cooling purposes) in the cupboard / compartment, at both high and low levels to ensure safe and efficient combustion and ventilation.

   The air vents may either communicate with room/internal space (appropriately ventilated) or be direct to outside air. The minimum effective areas of the permanent air vents, required in the cupboard / compartment, are specified as follows and are related to maximum rated heat input of the boiler (see Table 4).

Notes.

a. *Both air vents MUST communicate with the same room or internal space or MUST be on the same wall to outside air.*

b. *In siting the air vents care must be taken to avoid the freezing of pipework.*

c. *Where cupboard / compartment air vents are open to a room or internal space, the room or internal space MUST itself be provided with a permanent air vent, as previously specified.*

d. *The cupboard / compartment air vents must NOT communicate with a bedroom, bed-sitting room or a room containing a bath or shower.*

Table 4 - High and low vent areas

Boiler	Air from room/internal space cm² (in.²)		Air direct from outside cm² (in.²)	
	High Level	Low Level	High level	Low Level
CF 3/40	140 (22)	280 (44)	70 (11)	140 (22)
CF 3/50	190 (30)	348 (54)	95 (15)	180 (30)

EFFECT OF AN EXTRACTOR FAN

If there is any type of extractor fan fitted in the premises there is a possibility that, if an adequate air inlet area from outside is not provided, spillage of the boiler flue products could occur when the fan is in operation. Where such installations occur a spillage test, as detailed in BS.5440:1 MUST be carried out and any necessary action taken.

VENTILATION IN SERIES

In installations requiring 2 ventilators to be fitted in series, e.g. across a cavity wall, EACH ventilator should be sized in accordance with the above data. Where there are more than 2 ventilators in series, EACH should have an area of 50% in excess of the value quoted above.

WATER CIRCULATION SYSTEM

The boiler must NOT be used for direct hot water supply.

The following indirect open vented systems are suitable:

- Combined gravity domestic hot water (DHW) and pumped central heating (CH)
- Combined pumped gravity domestic hot water and pumped central heating.
- Pumped central heating only.
- Gravity domestic hot water only, up to a minimum domestic hot water cylinder storage capacity of 180 litres (40 gal.)

The resistance with an 11 °C temperature difference will be approximately 2 in.w.g. (5 mbar).

Table 5 - Water Flow Rate and Pressure Loss

Boiler size		CF 3/40	CF 3/50
Boiler output	**kW**	11.7	14.7
	Btu/h	40 000	50 000
Water Flow	**l/sec**	0.25	0.32
	gpm	3.3	4.2
Pressure	**kPa**	0.27	0.40
Loss	**m**	0.027	0.04
	ft	0.09	0.16

The central heating system should be in accordance with BS. 6798 and, in addition, with BS. 5449:1 for smallbore and microbore systems.

The domestic hot water system, if applicable, should be in accordance with the relevant recommendations of BS. 5546.

Copper tubing to BS. 2871:1 is recommended for water carrying pipework.

The hot water storage cylinder MUST be of the indirect type and should preferably be manufactured of copper.

The hot water cylinder and ancillary pipework not forming part of the useful heating surface should be lagged to prevent heat loss and any possible freezing, particularly where pipes run through roof spaces and ventilated underfloor spaces.

The flow and return connections to a fully pumped system may be made either at one side of the boiler or diagonally, to suit convenience. In a combined pumped heating and gravity domestic hot water system the gravity flow and return connections must be made to the same side of the boiler and the pumped connections to the opposite side.

IMPORTANT

The boiler must be vented. If venting cannot be done via a flow connection a separate vent MUST be fitted by the installer.

Draining taps MUST be located in accessible positions, which permit the draining of the whole system - including the boiler and hot water storage vessel. They should be at least 1/2" BSP nominal size and be in accordance with BS. 2879.

WATER TREATMENT

The heat exchangers fitted to these boilers have been internally treated with aluminium paint and only **Fernox Copal** or **Sentinel X100** water treatment products should be used. For further information on these products contact:

Fernox Manufacturing Co. Ltd.,	Sentinel Division
Britannica Works	Betz Dearborn
Clavering	Widnes
Essex	Cheshire
CB11 4QZ	WA8 8UD
Tel: 01799 550 811	Tel: 0151 424 5351

THERMOSTATIC RADIATOR VALVES

Caradon Plumbing Limited recommend that heating systems utilising full thermostatic radiator valve control of temperature in individual rooms should also be fitted with a room thermostat controlling the temperature in a space served by radiators not fitted with such a valve, as stated in BS. 5449.

When thermostatic radiator valves are used, the space heating temperature control over a living / dining area or hallway having a heating requirement of at least 10% of the boiler heat output should be achieved using a room thermostat, whilst other rooms are individually controlled by thermostatic radiator valves.

However, if the system employs thermostatic radiator valves on all radiators, or two port valves without end switches then a bypass must be fitted in order to ensure a flow of water should all the valves be in the closed position.

ELECTRICAL SUPPLY

WARNING. The appliance MUST be efficiently earthed.

Wiring external to the appliance MUST be in accordance with the current I.E.E. (BS.7671) Wiring Regulations and any local regulations which apply.

The boiler is supplied for 230 V ~ 50 Hz single phase.

The fuse rating is 3A.

Connection must be made in a way that allows complete isolation of the electrical supply - such as a double pole switch, having a 3mm (1/8") contact separation in both poles, or a plug and socket serving only the boiler and system controls.
The means of isolation must be accessible to the user after installation.

3 BOILER ASSEMBLY - Exploded View

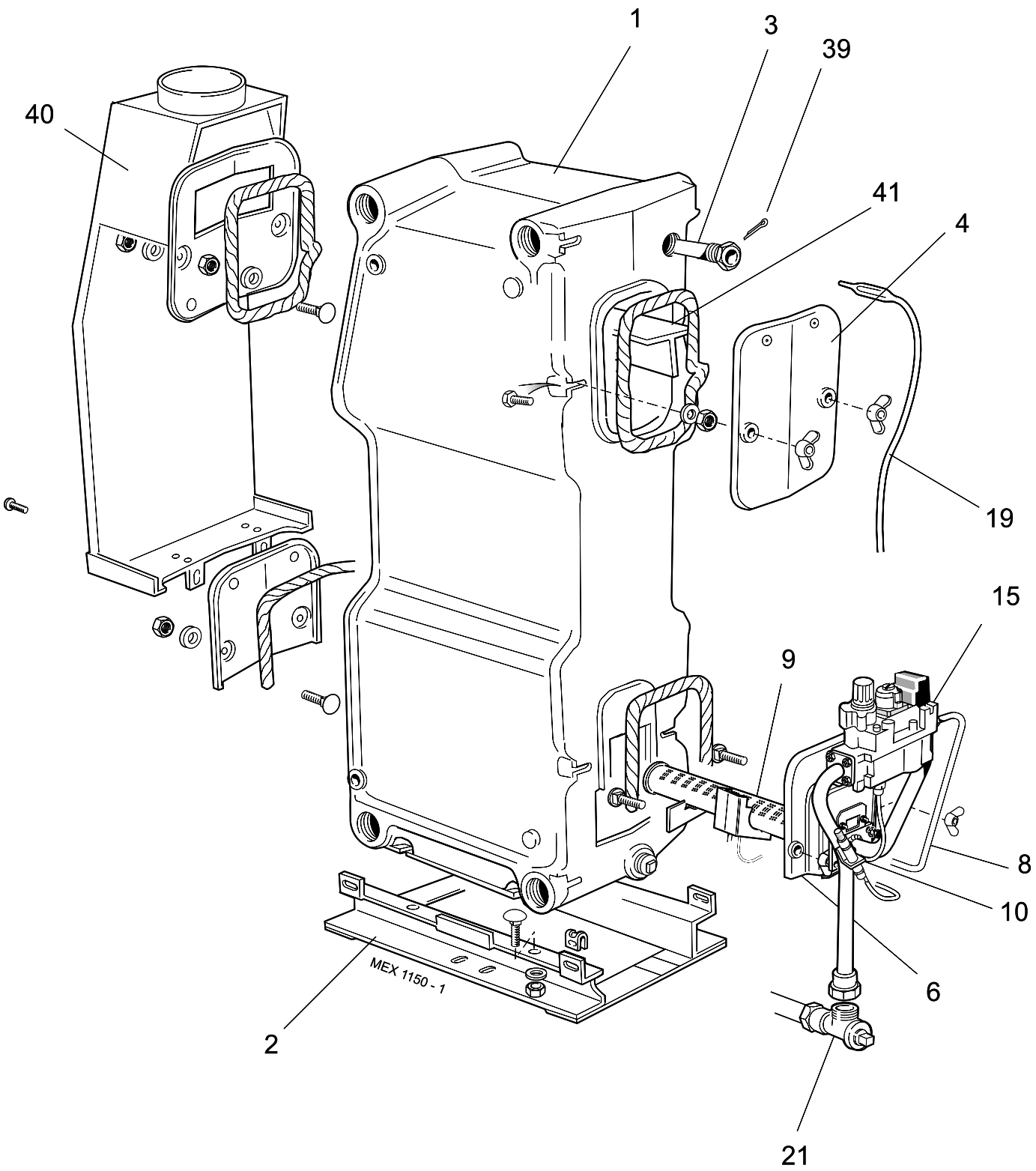

LEGEND

1. Heat exchanger.
2. Boiler feet assembly.
3. Thermostat pocket.
4. Cleanout cover.
6. Front plate assembly.
9. Main burner.
15. Gas valve.
17. Piezo unit.
21. Gas cock.
39. Split pin.
40. Diverter assembly.
41. Flue baffle.

4 UNPACKING

To avoid damage to the boiler casing it is recommended that the casing is removed BEFORE the boiler body is taken off the pallet.

PACK CONTENTS

- complete boiler assembly
- the Hardware Pack (listed separately below)
- these Installation and Servicing Instructions
- User's Instructions.

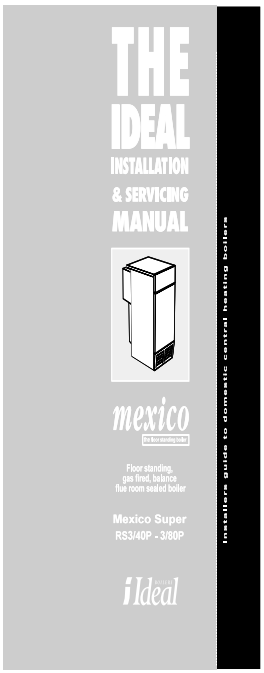

complete boiler assembly

HARDWARE PACK

- 1" BSP plugs - 2 off

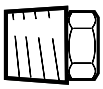

- Arrow label - 1 off

- Split pin - 1 off

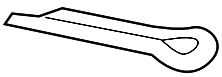

5 BOILER CASING REMOVAL

It is preferable to remove the casing to install the boiler.

1. Lift off the lower front panel.
2. Remove 2 screws and lift off the grille assembly.
3. Remove the gas valve cover by removing the retaining screw. Disconnect the electrical leads.
4. Remove the 2 screws securing the control panel and disengage the panel by lowering and pulling it forward. In order to remove the control panel entirely, the TTB thermostat has to be carefully released.
5. Remove the 2 screws securing the top panel to the side.
6. Draw the top panel forward and lift it off the boiler.

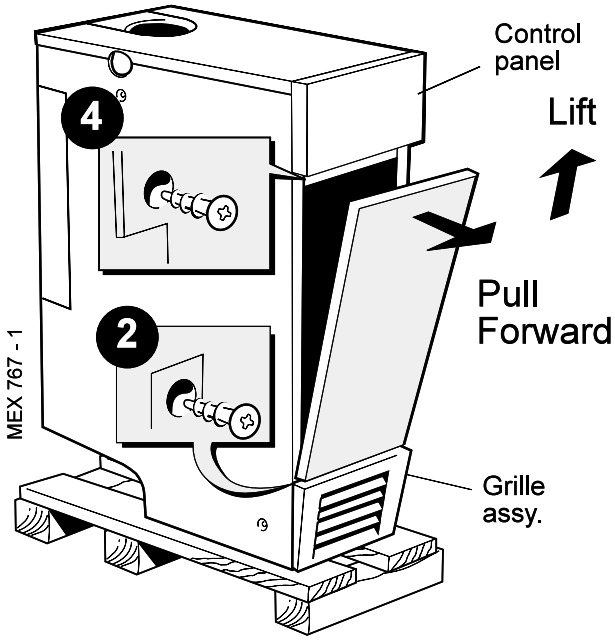

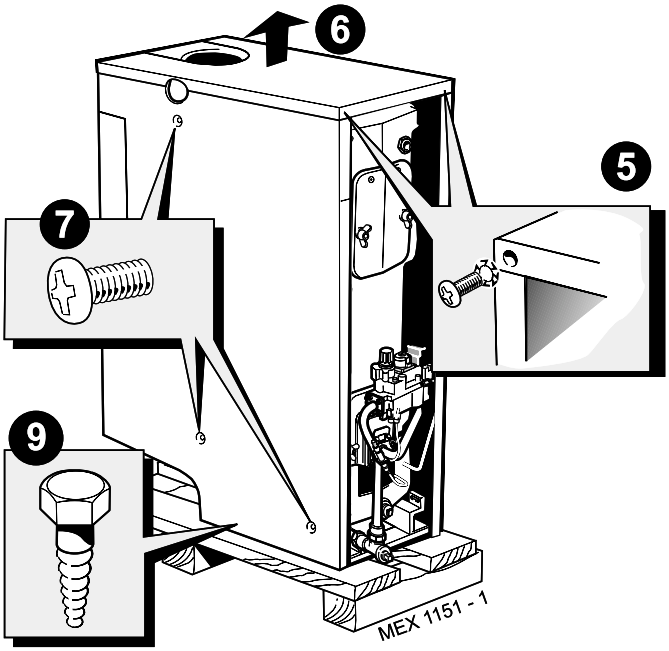

7. Remove the 3 screws securing each side panel to the boiler.
8. Remove the side panel.
9. The boiler is held to the packaging base by 2 M6 hex head screws. Remove the screws and remove the boiler from the packaging base.

6 CHECKING THE FLUEWAY BAFFLES

1. Remove the flue cleanout cover.
2. Check that the baffle is seated correctly.

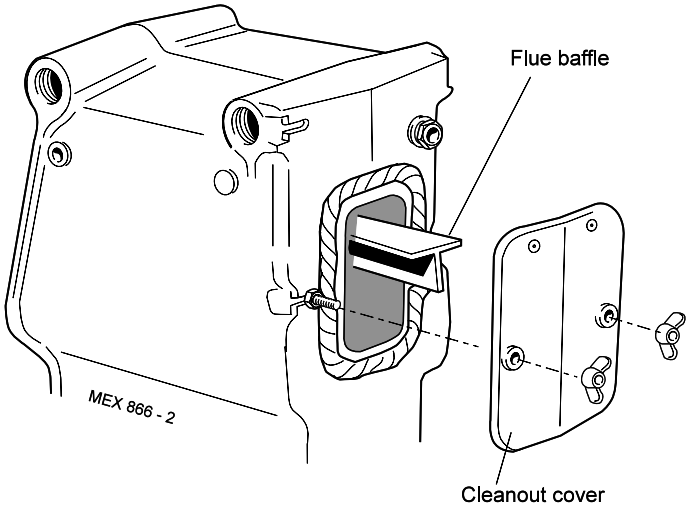

7 PREPARING THE BOILER

Note.

Before placing the boiler in the selected position any gas and water connections at the rear of the boiler should be prepared, due to the possible lack of access.

1. Fully pumped systems using more than 1 pump, serving separate zones, must have a common return connection to the boiler .
2. Select the desired pumped flow tapping.
3. Connect pipe fittings to the rear tappings and plug any unused tappings.
4. Place the boiler in position.

Note. *The pump may be fitted on the FLOW or RETURN.*

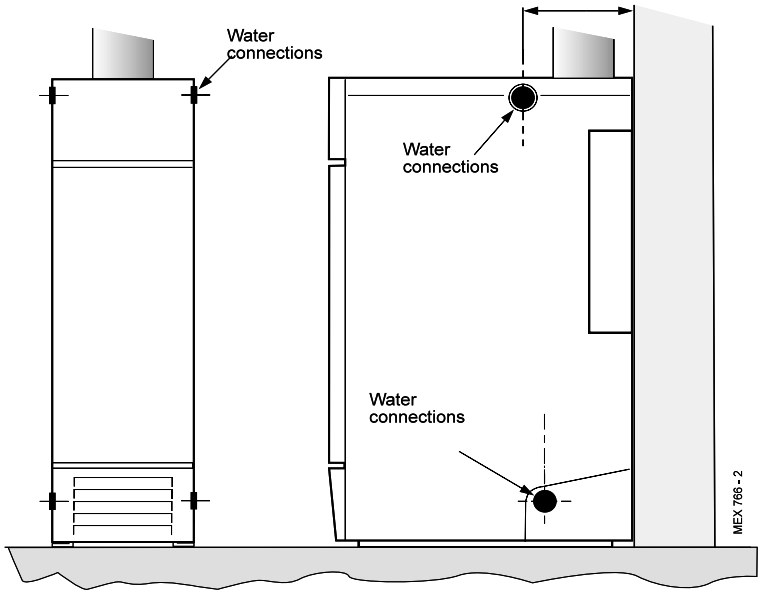

8 GAS CONNECTION

1. A MINIMUM working gas pressure of 20 mbar (8 in.w.g.) MUST be available at the boiler inlet, with the boiler operating.
2. Extend a gas supply pipe NOT LESS THAN 15mm (1/2") OD to the boiler and connect to the gas cock situated at the bottom LH side of the boiler. Attachment to the gas supply may be either left or right hand.
3. Test the gas installation for soundness and purge in accordance with BS.6891: 1988. Refer to Frame 22.

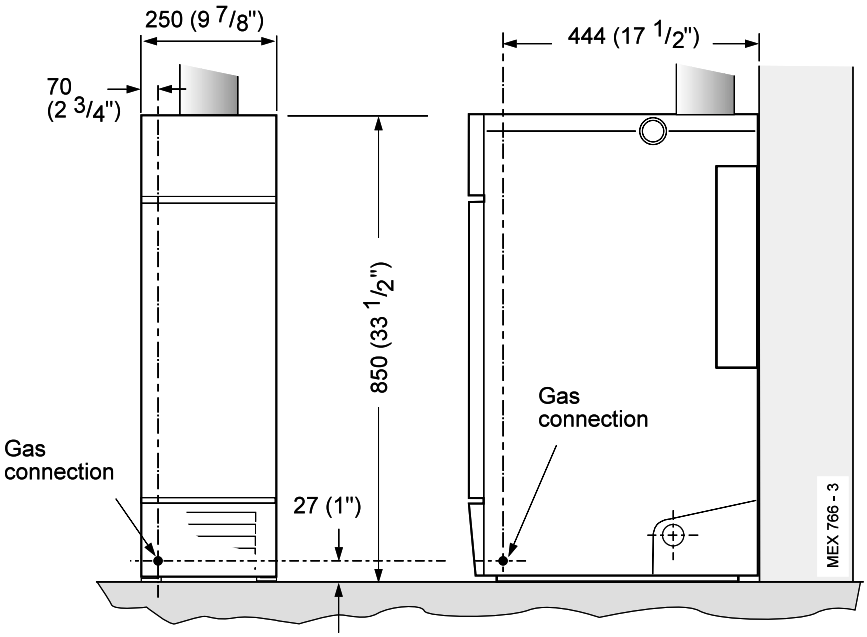

9 WATER CONNECTIONS

Notes.

a. *Isolating valves must be fitted as close to the pump as possible.*

b. *The boiler is not suitable for use with a direct hot water cylinder.*

c. *Gravity connections MUST be at least 28 mm (1").*

d. *The front top and bottom plugged connections MUST NOT BE USED.*

e. *2 spare blanking off plugs are provided in the Hardware Pack, for use as necessary in the rear flow or return water connections.*

1. Connect the system flow and return pipework to the boiler as appropriate.

Refer to Frames 10 and 11 for guidance on system design.

2. Ensure that all valves are open.

Fill and vent the system and check for water soundness.

10 MINIMUM REQUIREMENTS Fully pumped systems

1. Open vent and cold feed connections must be made to the boiler flow and return tappings, according to the options shown in Frame 1.

2. The boiler is assumed to be the highest point of the circulating system.

3. The circulating pump is positioned on the FLOW and the vertical distance, between the pump and feed/ expansion tank, must comply with the pump manufacturer's minimum requirements, to avoid cavitation. Should these conditions not apply, either lower the pump position or raise the feed/ expansion tank above the minimum requirements of **Caradon Plumbing Limited.**

4. The water velocity through the boiler flow/return pipes is assumed to be below 1 m/s (3 ft./s), whilst the pump flow rate is set to provide a temperature difference of 11 °C (20 °F) across the boiler flow/return, at design input.

5. This information is intended as a GUIDE ONLY and cannot take into account instantaneous changes in heat caused by the operation of motorised valves, pumps etc.

Due allowance MUST be made if surging is liable to occur.

If in any doubt, contact **Caradon Plumbing Limited.**

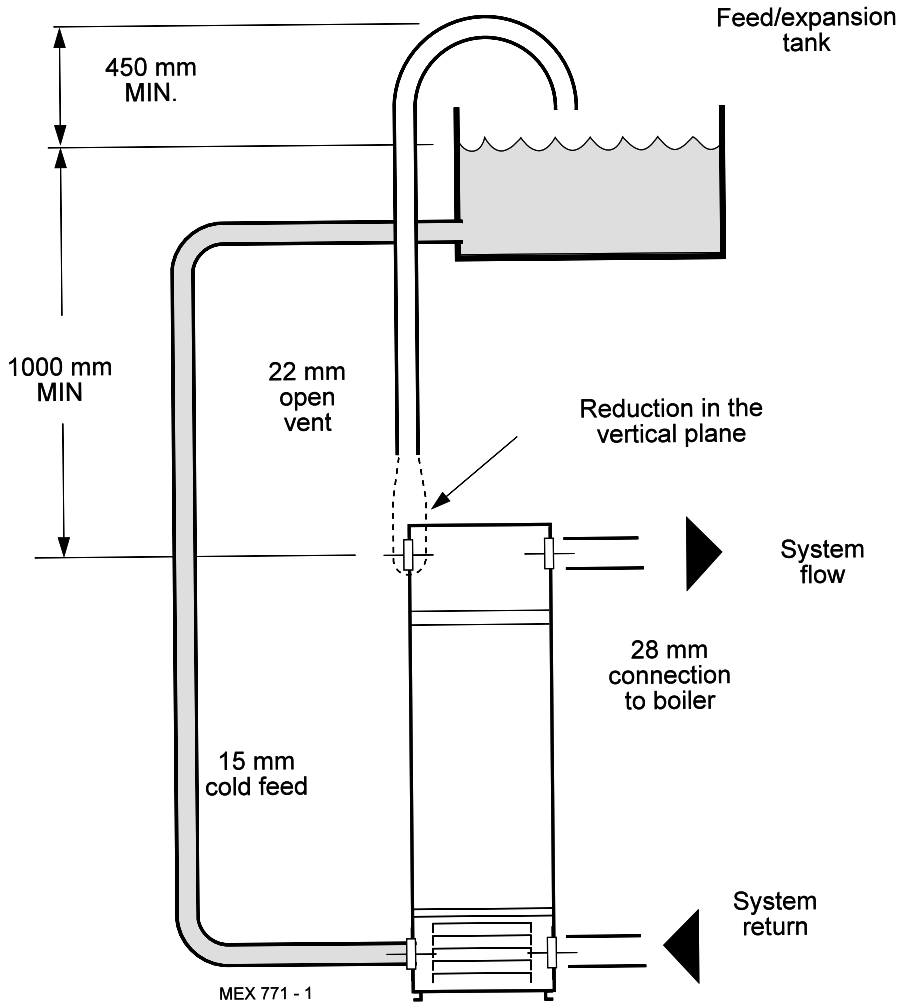

11 GRAVITY HOT WATER & PUMPED CENTRAL HEATING

1. Separate flow and return connections are used for each service. All possible configurations are given in Frame 1 but *ONLY those shown should be used.*

2. The use of a cylinder thermostat is recommended. This will prevent excessive DHW temperatures and thus reduce gas consumption.

3. The schematic pipework graph is based on the assumption that NO MORE than 8 elbows are used in the gravity loop, including entry to the boiler.

4. For each extra elbow in excess of 8, (R) MUST be reduced by 300 mm (12") or (H) increased by 100 mm (4")

5. Whatever value is selected for (R) the value of (H) MUST be at least that indicated by the graph.

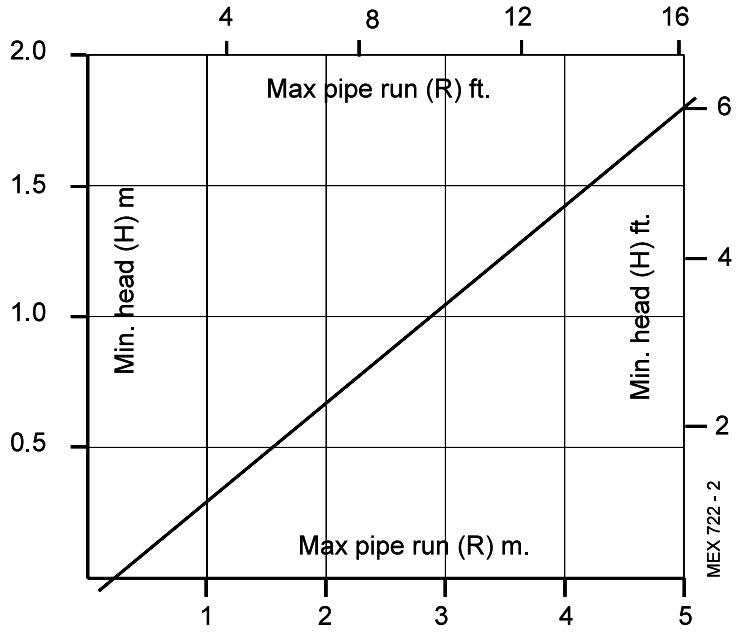

R *= the horizontal distance between the centre line of the cylinder and the boiler tappings used (measured along the pipe run).*

H *= the vertical distance between the top of the boiler and the base of the cylinder.*

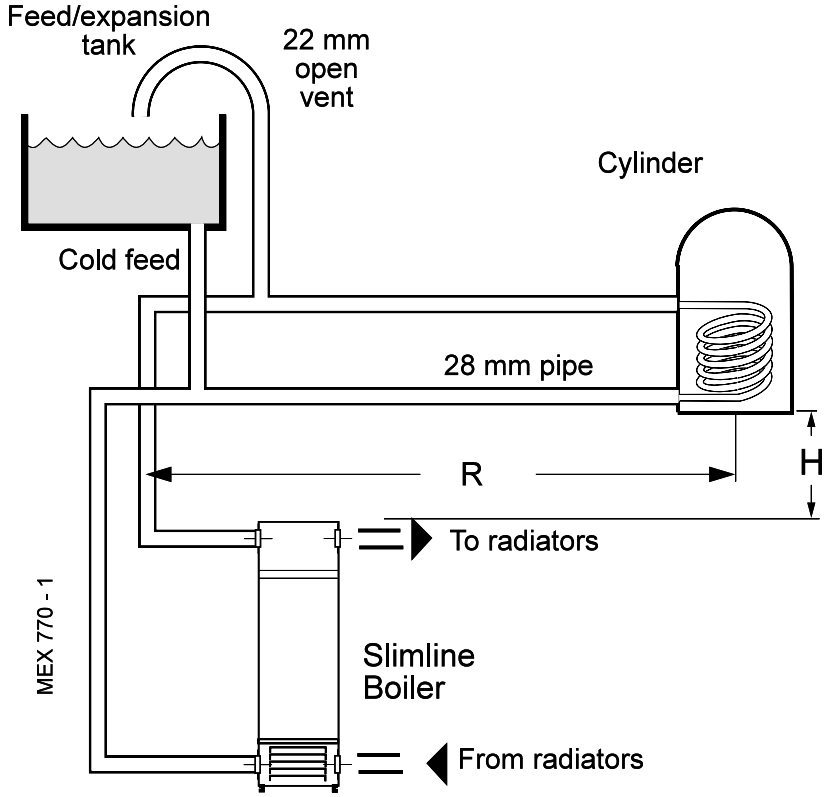

Notes.

a. *Flow and return pipes should rise vertically on leaving the boiler.*

b. *Horizontal pipes should be ABOVE ceiling level and as short as possible.*

c. *A MINIMUM inclination of 25 mm per 3 m run (1" per 10') is required to avoid air locks.*

If the above conditions cannot be met pumped primaries should be used.

12 FLUE CONNECTION

Connect the flue pipe to the flue outlet.

The flue pipe spigot and socket connections should be sealed with fibreglass rope or similar, and suitable fireclay cement.

Notes.

a. *The boiler flue connection outlet size is suitable for flue pipe conforming to BS 567.*

If sheet steel flue pipe is fitted, a suitable adaptor must be used.

b. *To facilitate installation and subsequent disconnection it is recommended that a slip or split socket be included in the flue installation, adjacent to the boiler flue outlet connection.*

c. *A minimum of 600mm (2') of vertical flue directly above the boiler should be provided.*

Detail of flue connection sealing arrangement

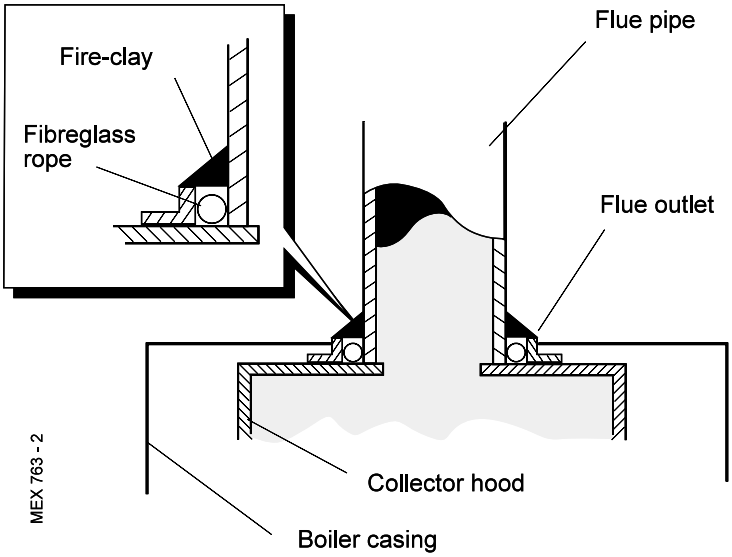

13 ELECTRICAL CONNECTIONS

WARNING

The appliance MUST be efficiently earthed.

A mains supply of 230 V ~ 50 Hz is required.

All external controls and wiring MUST be suitable for mains voltage.

Wiring should be in 3-core PVC insulated cable NOT LESS than 0.75 mm^2 (24 x 0.2 mm) to BS.6500, Table 16.

Wiring external to the boiler MUST be in accordance with current I.E.E. (BS 7671) Wiring Regulations and local regulations.

Connection must be made in a way that allows complete isolation of the electrical supply - such as a double pole switch, having a 3mm (1/8") contact separation in both poles, or a plug and socket serving only the boiler and system controls. The means of isolation must be accessible to the user after installation.

The fuse rating should be 3A.

14 INTERNAL WIRING

Flow and pictorial wiring diagrams are shown in Frames 15 and 16. A schematic wiring diagram is included in the Lighting Instruction label.

1. Remove the securing screw and lift off the control box cover.
2. Route the electrical leads into the box and wire into the terminal strip, as shown.

Notes.

a. *Secure each lead with one of the cable clamps.*

b. *The mains lead connection MUST be made so that, should the lead slip from its anchorage, the current conductors become taut before the earthing conductor.*

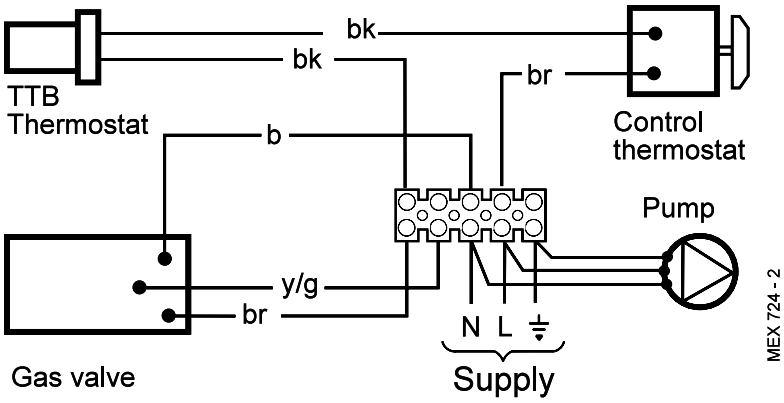

15 EXTERNAL CONTROLS

External wiring must be in accordance with the current I.E.E. (BS.7671) Wiring Regulations.

The wiring diagrams illustrated in Frames 17-19 cover the systems most likely to be fitted to this appliance.

For wiring external controls to the **Mexico Slimline 3 CF** boiler reference should be made to the system wiring diagrams supplied by the relevant manufacturer, in conjunction with the flow wiring diagram and also Frame 16.

Difficulty in wiring should not arise, providing the following directions are observed:

1. Controls that switch the system ON and OFF, e.g. a time switch, MUST be wired, in series, in the live mains lead to the boiler.
2. Controls that override an ON/OFF control, e.g. a frost thermostat, MUST be wired into the mains lead, in parallel, with the control(s) to be overridden. Refer to Frame 20.
3. Controls that switch the circulating pump *only* on and off (e.g. a room thermostat) MUST be wired in series, with the pump in the live pump lead.
4. If a proprietary system is used, follow the instructions supplied by the manufacturer.

Advice on required modifications to the wiring may be obtained from the component manufacturers.

Note. *If there are no external controls the circulating pump MUST be wired into the control box.*

Flow wiring diagram

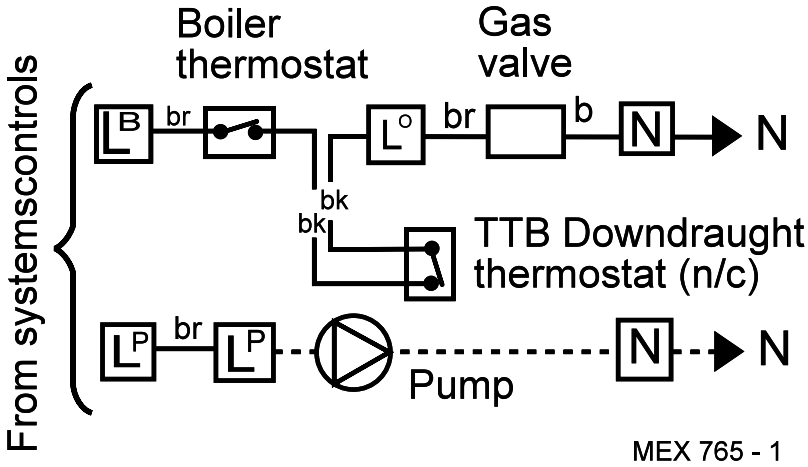

16 PICTORIAL WIRING

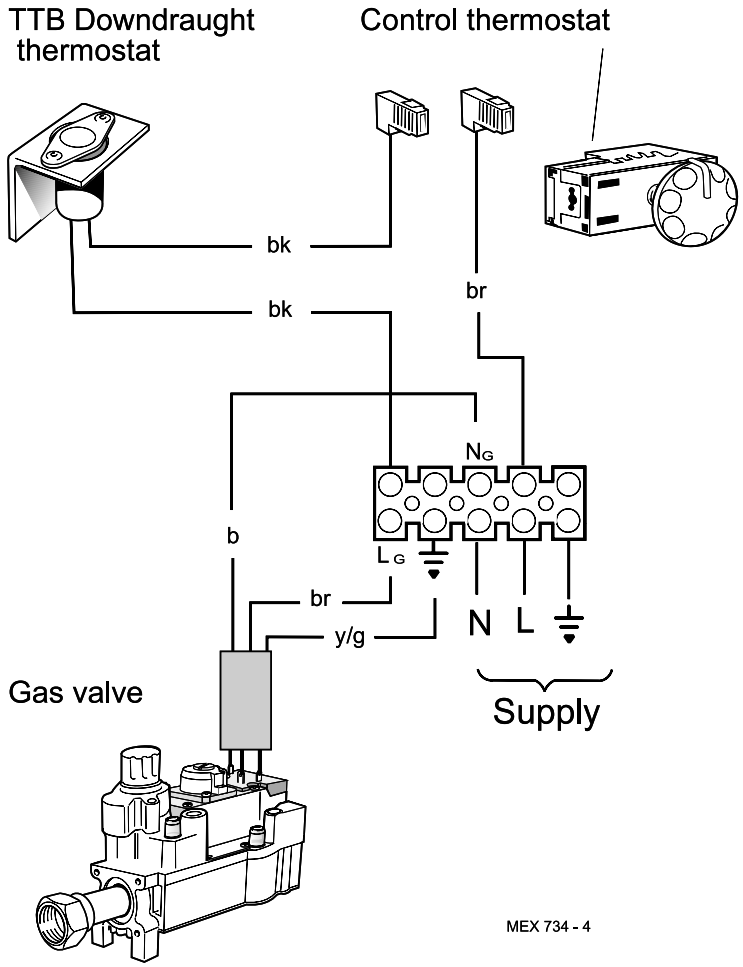

LEGEND

b	blue
bk	black
br	brown
y/g	yellow/green

17 FULLY PUMPED - Y PLAN

Notes.

1. *Some earth wires are omitted for clarity. Ensure proper earth continuity when wiring.*
2. *Numbering of terminals on thermostats is specific to the manufacturer indicated.*
3. *This is a fully controlled system - set the boiler thermostat to maximum.*
4. *'Switchmaster Midi' is similar in operation but the wiring differs slightly; see manufacturer's literature.*

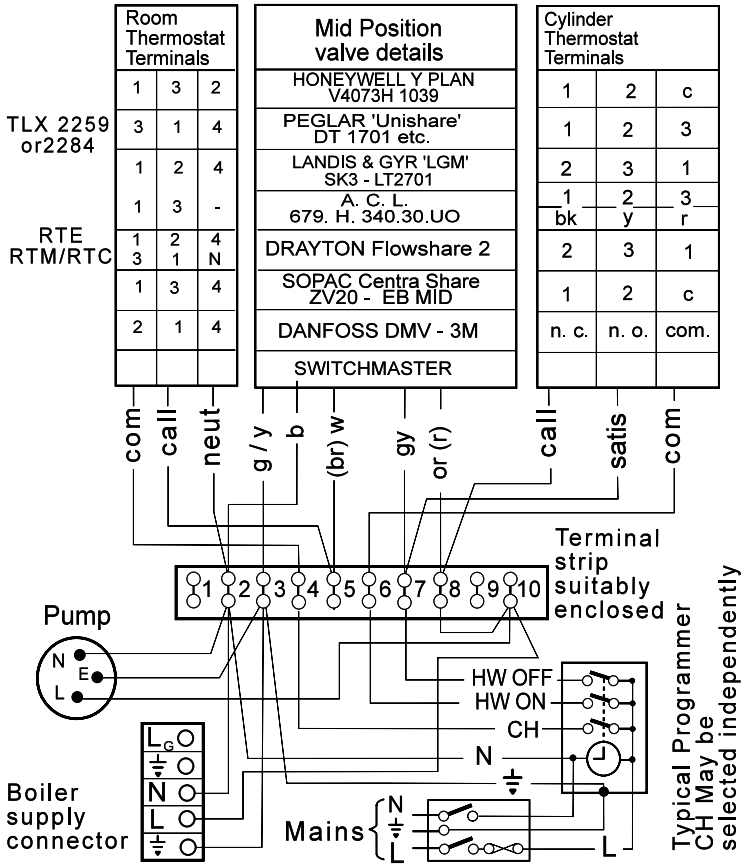

LEGEND

b	blue	**or**	orange
bk	black	**w**	white
br	brown	**gy**	grey
r	red	**y/g**	yellow/green

18 FULLY PUMPED - S PLAN

Notes.

1. *Some earth wires are omitted for clarity. Ensure proper earth continuity when wiring.*
2. *Numbering of terminals on thermostats is specific to the manufacturer.*
3. *This is a fully controlled system - set the boiler thermostat to maximum.*
4. *'Switchmaster Autozone' has grey and orange auxiliary switch leads but the GREY (NOT the orange) wire must be connected to the incoming live supply.*

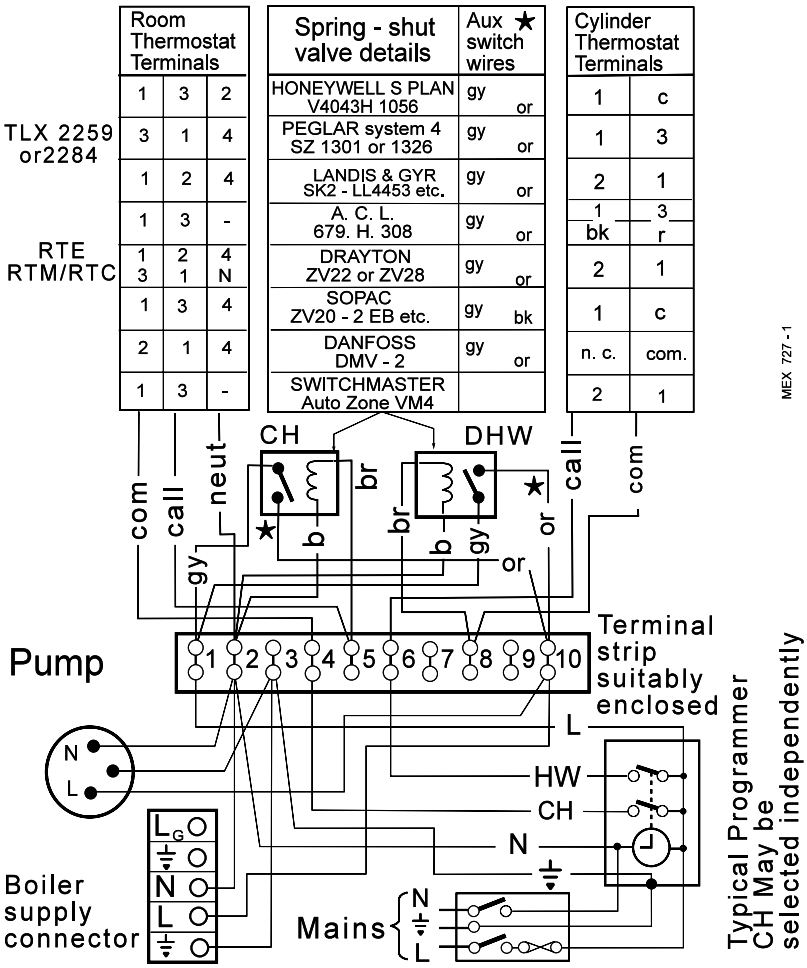

LEGEND

b	blue	**r**	red
bk	black	**w**	white
or	orange	**y/g**	yellow/green
br	brown	**gy**	grey

19 HONEYWELL 'C' PLAN

Gravity HW & Pumped CH

Notes.

1. *Some earth wires are omitted for clarity. Ensure proper earth continuity when wiring*
2. *Numbering of terminals on thermostats is specific to the manufacturer.*

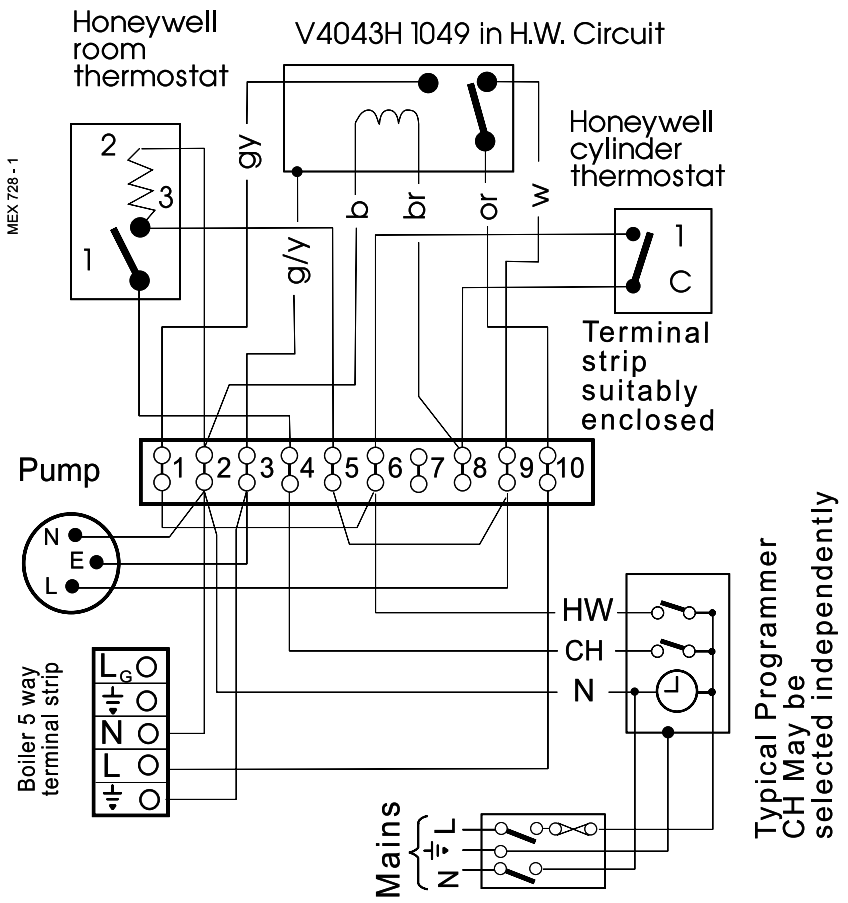

LEGEND					
		bk	black	**b**	blue
w	white	**br**	brown	**gy**	grey
r	red	**or**	orange	**g/y**	green/yellow

20 FROST PROTECTION

Central heating systems fitted wholly inside the house do not normally require frost protection as the house acts as a 'storage heater' and can normally be left at least 24 hrs. without frost damage. However, if parts of the pipework run outside the house or if the boiler will be left off for more than a day or so then a frost 'stat should be wired into the system.

This is usually done at the programmer, in which case the programme selector switches are set to OFF and all other controls MUST be left in the running position.

The frost 'stat should be sited in a cold place but where it can sense heat from the system.

Wiring should be as shown, with minimal disturbance to other wiring of the programmer.

Designation of the terminals will vary, but the programmer and thermostat manufacturer's leaflets will give full details.

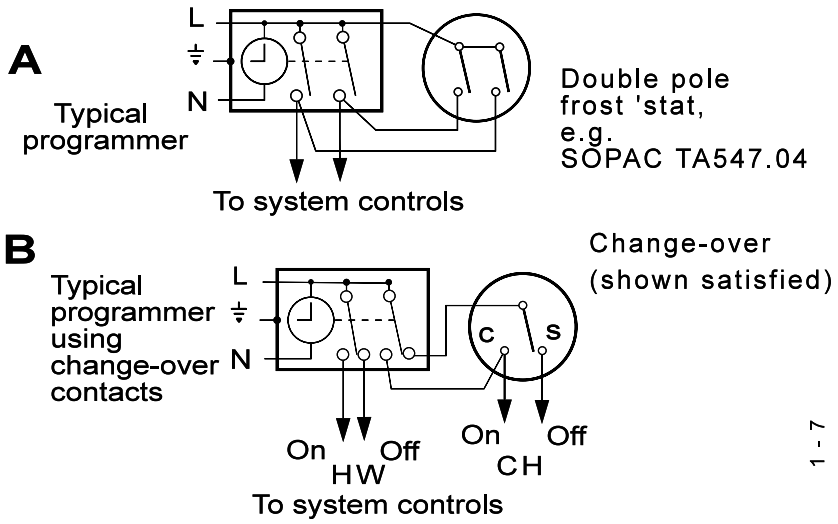

Diagram A shows a double pole frost thermostat, which should suffice for all systems which do not use the OFF terminals of the programmer.

Diagram B shows a 'change-over' frost thermostat, which will cover most systems which do use CH OFF. If, however, on such a system the HW pipework is in an isolated part of the house, a second frost thermostat may be used to protect it.

If in doubt, ask your installer for advice.

21 FITTING THE CASING

1. Offer up the LH side panel and secure the panel to the baseplate and collector hood.
2. Repeat step 1 to refit the RH side panel.
3. Place the top panel on top of the side panels.
4. Secure the top panel to the side panels.

IMPORTANT.

Wiring within the boiler casing must be neatly secured with the cable straps provided and MUST NOT be allowed to touch the burner front plate, or the cleanout cover and the collector hood.

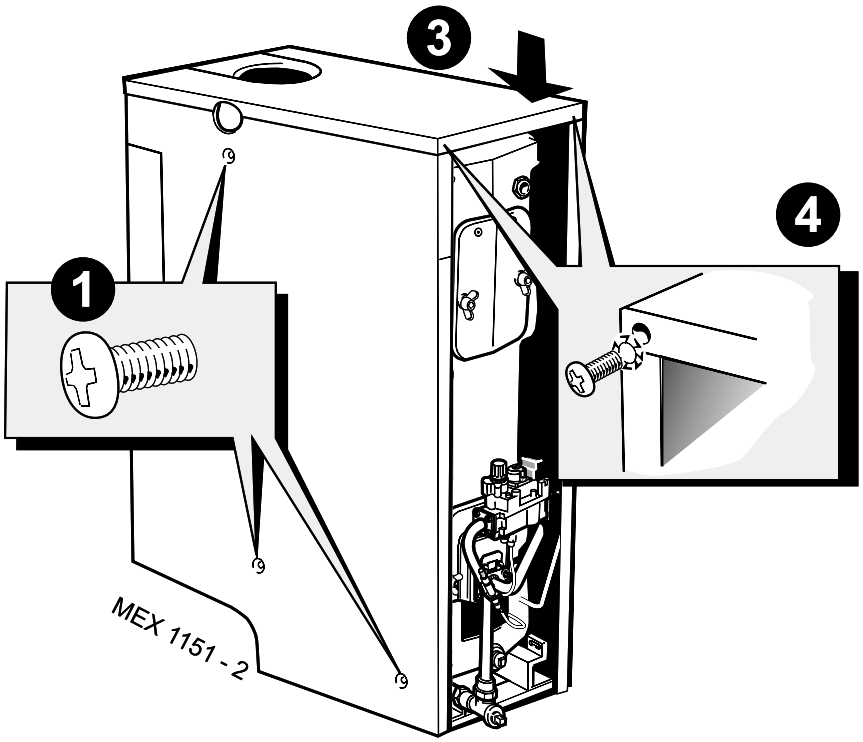

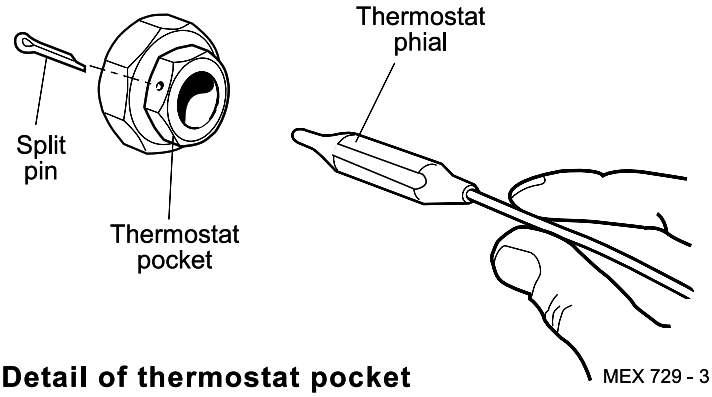

Detail of thermostat pocket

5. Insert the thermostat phial into the thermostat pocket. Take care not to kink the thermostat capillary as it is unwound, and secure it with the split pin as shown.
6. Replace the control box cover and refit the control panel using the screws previously removed.
7. Refit the grille assembly.

22 COMMISSIONING AND TESTING

A. ELECTRICAL INSTALLATION

1. Checks to ensure electrical safety should be carried out by a competent person.
2. ALWAYS carry out preliminary electrical system checks, i.e. earth continuity, polarity, resistance to earth and short circuit using a suitable test meter.

B. GAS INSTALLATION

1. The whole of the gas installation, including the meter, MUST be inspected and tested for soundness, and purged in accordance with the recommendations of BS. 6891.
2. Purging air from the gas installation may be expedited by loosening the union on the gas service cock on the boiler and purging until gas is detected.
3. Retighten the union and check for gas soundness.

C. WATER CIRCULATING SYSTEM

1. The whole of the system should be thoroughly flushed out with cold water WITHOUT the pump in position. Ensure that all valves are open.
2. With the pump fitted the system should be filled and air locks cleared. Check for water soundness.

WARNING. Whilst effecting the required gas soundness test and purging air from the gas installation, open all windows and doors, extinguish naked lights and **DO NOT SMOKE.**

23 INITIAL LIGHTING

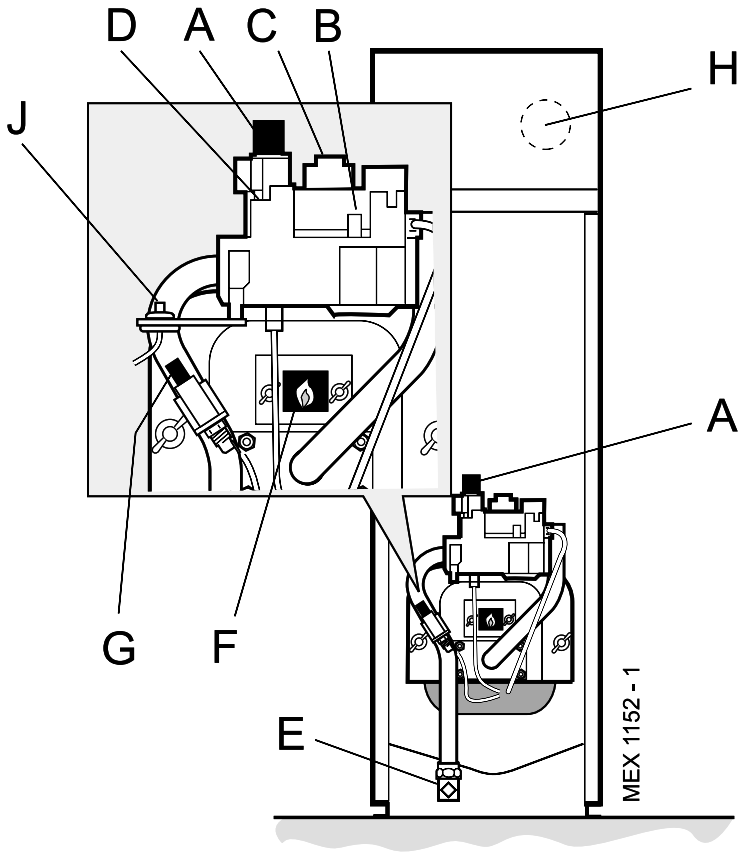

LEGEND

A Gas control knob
B Burner pressure test point
C Main burner pressure adjuster
D Inlet pressure test point
E Gas service cock
F Sightglass
G Piezo unit ignition
H Boiler thermostat knob
J Overheat thermostat (optional) reset button.

1. Connect the gas valve electrical leads and refit the cover.

2. Check that the gas service cock (E) is ON and that the boiler thermostat control knob (H) is OFF.

3. Loosen the screw in the burner pressure test point (B) and connect a gas pressure gauge via a flexible tube.

4. Turn the gas control knob (A) CLOCKWISE until resistance is felt and then release it.

5. Push in and retain fully depressed the gas control knob (A). Press and release the piezo unit button (G) repeatedly until the pilot is seen to light through the sightglass (F).

6. Hold the gas control knob (A) depressed for 15 seconds after the pilot burner has ignited, then release.

If the pilot burner fails to remain alight at this stage, repeat the procedure detailed above but wait longer than 15 seconds before releasing the gas control knob (A).

7. Check the appearance of the pilot flame to ensure that it envelops the tip of the thermocouple and is approximately 25mm (1") long.
The pilot flame is factory set and no adjustment is possible.

8. Switch the boiler thermostat control knob (H) to position 6 and check that the burner cross-lights smoothly from the pilot flame.

9. Test for gas soundness around the boiler gas component joints, using leak detection fluid.

10. Operate the boiler for 10 minutes to stabilise the burner temperature. The boiler is pre-set at the factory to its maximum nominal rating but can be range-rated to suit the system design requirements. Refer to Table 2, page 3.

If the burner setting pressure requires adjustment, remove the silver threaded protection cap on the top of the regulator. Adjust the main burner pressure adjuster (C) until the required main burner pressure is achieved.

Note. *Continual adjustment in either direction will produce the opposite effect.*

11. If the boiler output is set to MID or MINIMUM affix the appropriate indicator label, supplied, to the data plate (front of baseplate).

12. Immediately check that there is no spillage of combustion products from the draught diverter outlets by carrying out a spillage test as detailed in BS. 5440:1.

Note. *This must be done before any building in.*

13. Turn the boiler thermostat knob (H) to OFF.

14. Remove the pressure gauge and tube. Retighten the screw in the pressure test point, ensuring that a gas-tight seal is made.

24 GENERAL CHECKS

Make the following checks for correct operation:

1. Turn the boiler thermostat OFF and ON to check that the main burner is extinguished and relit in response.
2. Check that the programmer, if fitted, and all other system controls function correctly.

   Operate each control separately and check that the main burner or circulating pump (as the case may be) responds.
3. **Flame failure device**

   The flame failure device must cut off the gas to the burner within 60 seconds. Check the operation of the flame failure device in the gas control valve as follows:

   a. With the burner alight, turn the gas control knob clockwise until resistance is felt and then release it. The burner and pilot flame should shut down immediately.

   Note. *A latch in the gas control valve provides a safety delay period of approximately 30 seconds before the pilot can be relit.*

   b. The correct operation of external system controls should be proved. Turn each, in turn, to OFF and ON and check that the main burner or circulating pump responds.
4. **Water Circulation System**

   a. With the system HOT, examine all water connections for soundness.

   b. With the system still hot, turn off the gas, water and electricity supplies to the boiler and drain down, in order to complete the flushing process.

   c. Refill and vent the system, clear all air locks and again check for water soundness.

   d. Balance the system.
5. Finally, set the controls to the user's requirements and refit the lower panel and close the controls door.

Notes.

a. *If an optional programmer kit is fitted refer to the separate Programmer Kit Installation Instructions and User's Instructions.*

b. *The temperatures quoted below are approximate and vary between installations.*

Thermostat Knob Setting	Flow Temperature °C	°F
1	54	130
2	60	140
3	66	150
4	71	160
5	77	170
6	82	180

25 HANDING OVER

After completing the installation and commissioning of the system the installer should hand over to the householder by the following actions:

1. Hand the User's Instructions to the householder and explain his or her responsibilities under the Gas Safety (Installation and Use) Regulations 1994, amendments 1996 or rules in force.
2. Draw attention to the lighting instruction label affixed to the inside of the controls door.
3. Explain and demonstrate the lighting and shutting down procedures including the function of the TTB downdraught thermostat.
4. The operation of the boiler and the use and adjustment of ALL system controls should be fully explained to the householder, to ensure the greatest possible fuel economy consistent with household requirements of both heating and hot water consumption.

   Advise the User of the precautions necessary to prevent damage to the system and to the building, in the event of the system remaining inoperative during frosty conditions.
5. Explain the function and the use of the boiler thermostat and external controls.
6. Explain and demonstrate the function of time and temperature controls, radiator valves etc., for the economic use of the system.
7. If an optional Programmer Kit is fitted then draw attention to the Programmer Kit User's Instructions and hand them to the householder.
8. **After installation, commissioning and customer hand-over instructions please complete the benchmark appliance log book and leave this with the customer.**
9. Stress the importance of regular servicing by a CORGI registered installer and that a comprehensive service should be carried out AT LEAST ONCE A YEAR.

26 SCHEDULE

To ensure the continued safe and efficient operation of the appliance, it is recommended that it is checked at regular intervals and serviced as necessary. The frequency of servicing will depend upon the installation condition and usage but should be carried out at least annually .

It is the law that any service work must be carried out by a CORGI registered installer.

a. Light the boiler and carry out a pre-service check, noting any operational faults.

b. Clean the main burner.

c. Clean the heat exchanger.

d. Clean the main injectors.

e. Check the condition of the thermocouple.

f. Check that the flue is unobstructed and that the flue system, including the flue cleanout cover, is sealed correctly.

g. If the appliance has been installed in a compartment, check that the ventilation areas are clear.

The servicing procedures are covered more fully in Frames 28 to 32 and MUST be carried out in sequence.

WARNING. Always turn OFF the gas supply at the gas service cock and switch OFF and DISCONNECT the electrical supply to the appliance *BEFORE SERVICING.*

IMPORTANT. After completing the servicing or exchange of components always test for gas soundness and carry out functional checks as appropriate and test for spillage.

27 BOILER CASING REMOVAL

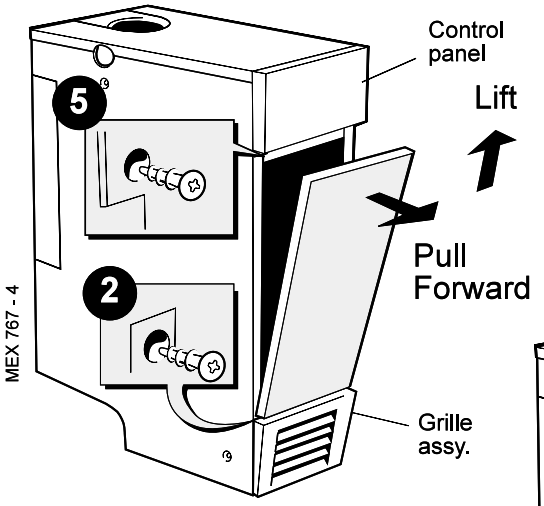

1. Lift off the lower front panel.

2. Remove the 2 screws and lift off the grille assembly.

3. Remove the gas valve electrical cover and disconnect the electrical leads.

4. Release the gas valve lead from the retaining clip.

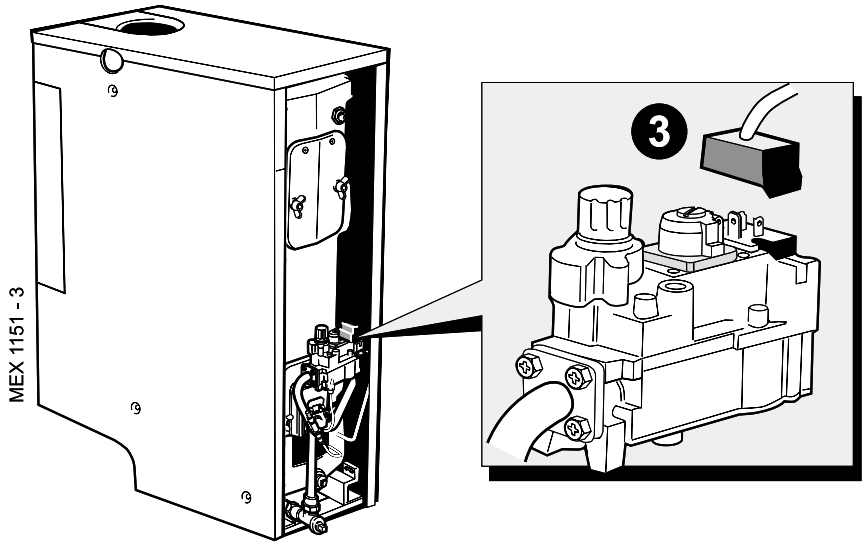

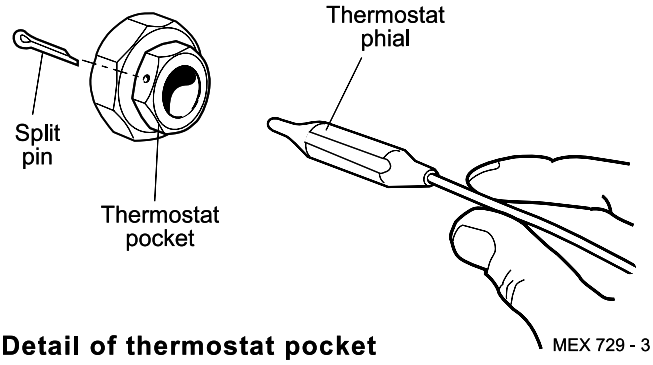

Detail of thermostat pocket

5. Remove the 2 screws securing the control panel and pull down to release the tabs from under the top panel.

6. Remove the thermostat phial from the pocket (as shown) and unclip the TTB thermostat.

7. If the boiler is not fitted under a work top, access for flue cleaning will be improved by removing the top panel.

28 BURNER AND CONTROLS ASSEMBLY

1. Lift off lower front panel (refer to Frame 27) and remove the grille assembly. Undo the gas cock union
2. Undo the 2 wing nuts and washers securing the burner front plate to remove the burner/ controls assembly complete from the boiler.
3. When replacing a defective main burner bar it is most important that the baffles are fitted to the new burner.

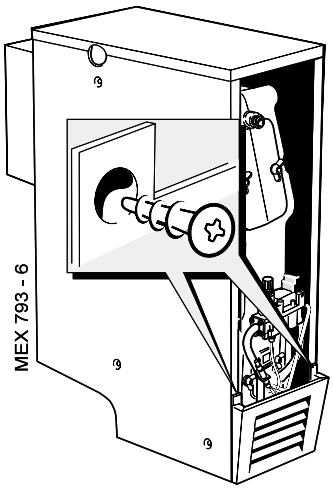

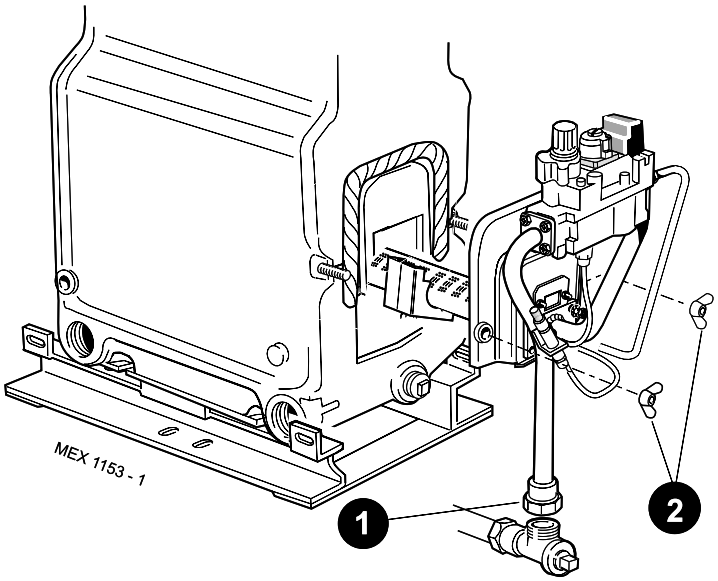

29 CLEANING THE BURNER ASSEMBLY

1. Remove the 2 split pins securing the burner end cap. The cap, together with the circular gauze, can now be removed from the burner bar. Clean the gauze to remove any deposits of lint, fluff etc.
2. Brush off any deposits that may have fallen onto the burner head, ensuring that the flame ports are unobstructed, and remove any debris that may have collected.

   Note. *Brushes with metallic bristles MUST NOT be used.*
3. Remove the main burner injector. Check, clean or replace, as required.
4. Refit the injector, using an approved jointing compound.
5. Inspect the pilot burner, thermocouple and ignition electrode; ensure they are clear and in good condition.

   Check that:

   a. The pilot burner is clean and unobstructed.

   b. The pilot shield is clean and unobstructed.

   c. The ignition electrode is clean and undamaged.

   d. The ignition lead is in good condition and securely connected.

   d. The spark gap is correct. Refer to Frame 39.

   e. The thermocouple tip is not burned or cracked.

   f. The position of the thermocouple relative to the pilot burner is correct. Refer to Frame 39.

   g. The thermocouple terminal at the gas valve is clean and secure.

   h. The sightglass is clean and undamaged.
6. Clean or renew components as necessary.

30 CLEANING THE FLUEWAYS

1. Remove the burner assembly.
2. Remove the cleanout cover.
3. Lift out the flue baffle.
4. Remove all loose deposits from the heat exchanger, especially from between the fins, using a suitable brush. Remove all debris from the combustion chamber base.
5. Check that the flue outlet duct is unobstructed.

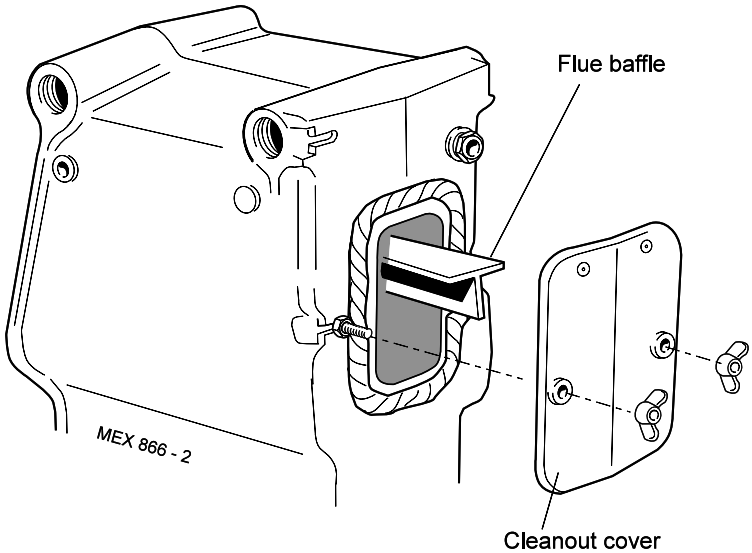

31 RE-ASSEMBLY

Re-assemble the boiler in the following order :

1. Refit the flue baffle into the boiler flueway, ensuring that they are correctly repositioned. Refer to Frame 6.
2. Refit the flue cleanout cover, renewing any damaged or deteriorating sealing gasket.
3. Refit the casing top panel.
4. Reconnect the electrical wiring and refit the controls panel, ensuring that the thermostat phial and phial retaining clip are correctly located in the thermostat pocket and secured by the split pin. Refer to Frame 27.
5. Check the sightglass in the front plate - clean or renew as necessary.
6. Renew any damaged or deteriorating front plate gasket.
7. Refit the burner and controls assembly.
8. Reconnect the gas service cock.
9. Refit the grille assembly.

32 GAS PRESSURE ADJUSTMENT

1. Pilot pressure.
   Pilot adjustment is factory set to maximum and no adjustment is possible,
2. Main burner pressure.
   After servicing, reference should be made to Table 2, which quotes details of the rated output with the related burner pressure and heat input.

Any required adjustments should be made using the pressure adjustment screw. Refer to Frame 23, 'Initial Lighting'.

Refit the lower front panel in reverse order. Refer to Frame 27.

REPLACEMENT OF PARTS

33 GENERAL

When replacing any component:

1. Isolate the electricity supply.
2. Turn off the gas supply at the boiler.
3. Remove the lower front panel.

For replacement of programmer units refer to the separate Programmer Kit Instructions.

34 SIGHTGLASS REPLACEMENT

1. Unfasten the two wing nuts and washers. Remove the assembly from the front plate.
2. Fit the new sightglass and re-assemble in the correct order (i.e. gasket, glass, gasket and frame), as shown.
3. Retighten 2 wing nuts to ensure an airtight seal. *Do NOT overtighten.*

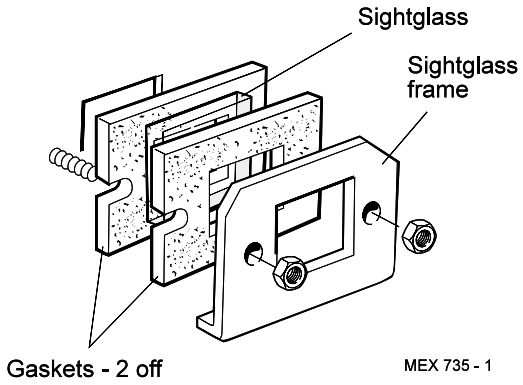

35 PIEZO UNIT REPLACEMENT

1. Disconnect the ignition lead from the piezo unit body.
2. Remove the 2 nuts securing the body to the studs on the gas valve and withdraw the unit, as shown.
3. Fit the new unit and reassemble in reverse order.

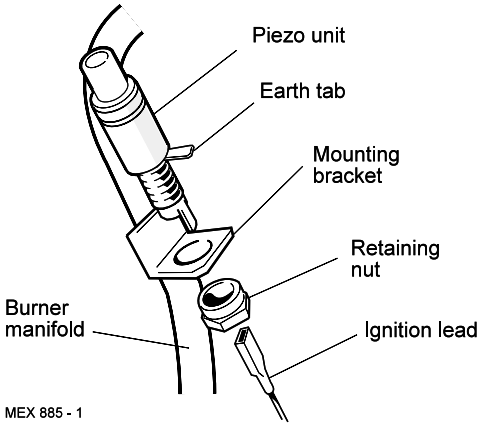

36 PILOT BURNER REPLACEMENT

1. Lift off lower front panel and remove the grille assembly. Undo the gas cock union. Remove the burner and controls assembly. Refer to Frames 27 & 28.
2. Remove the ignition electrode. Refer to Frame 41.
3. Unscrew the thermocouple nut and pull the thermocouple clear.
4. Undo the pilot supply pipe nut and ease clear of the pilot burner. DO NOT lose the pilot injector, which is a push-fit in the pilot burner housing.
5. Remove the 2 securing screws and washers, and withdraw the pilot burner.
6. Fit the new pilot burner and re-assemble in reverse order, ensuring that:
   - **a.** The injector is in position when refitting the pilot supply.
   - **b.** A gas-tight joint is made.
   - **c.** The spark gap is correct.
7. Refit the thermocouple and electrode, reassembling in reverse order.

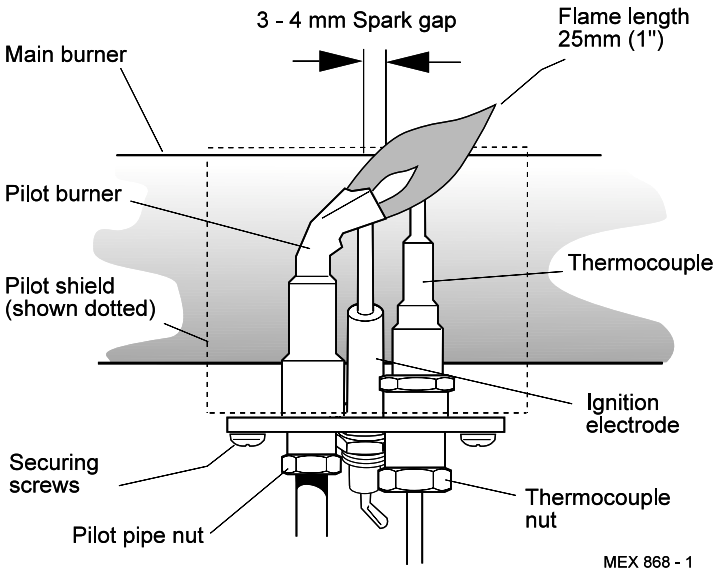

37 BOILER THERMOSTAT REPLACEMENT

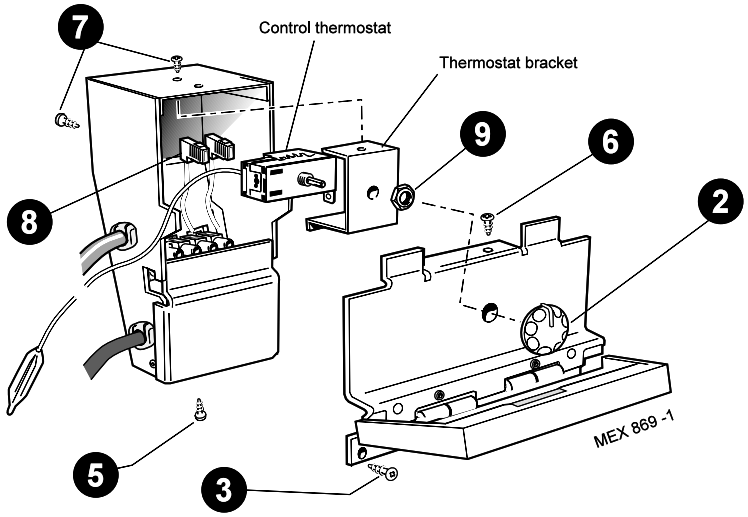

1. Lift off the front lower panel - Refer to Frame 27.
2. Pull off the thermostat knob.
3. Remove the 2 screws and pull down the control panel tabs clear of the top panel.
4. Remove the thermostat phial from the pocket - refer to Frame 27.
5. Remove the bottom self tapper and remove the cover.
6. Remove the top self tapper and ease the control box off the control panel.
7. Remove the 2 self tappers to release the thermostat bracket.
8. Disconnect the electrical leads.
9. Unscrew the thermostat nut to withdraw the thermostat.
10. Fit the new thermostat and re-assemble in reverse order.

38 CONTROLS PANEL REPLACEMENT

1. Lift off the lower front panel. Refer Frame 27
2. Pull off the thermostat knob.
3. Disconnect the electrical connections from the gas valve.
4. Unscrew the 2 screws and pull down the control panel so that the 2 tabs clear the top panel.
5. Remove the bottom screw and remove the cover from the control box.
6. Remove the top screw and ease the control box off the control panel.
7. Disconnect the mains electrical supply from the terminal strip and release from its clamp.
8. Remove the 2 screws to release the thermostat bracket.
9. Disconnect the TTB thermostat leads from the terminal strip and control thermostat. Then release from its bush.
10. Remove the thermostat phial from the pocket. Refer to Frame 27.
11. On the new control box gain access to the control thermostat as described above.
12. Discard the control thermostat lead that connects to terminal strip marked 'L_G'.
13. Reconnect the TTB thermostat lead to the control thermostat and terminal strip marked 'L_G'.
14. Assemble new control box and panel and fit to the casing reverse order.

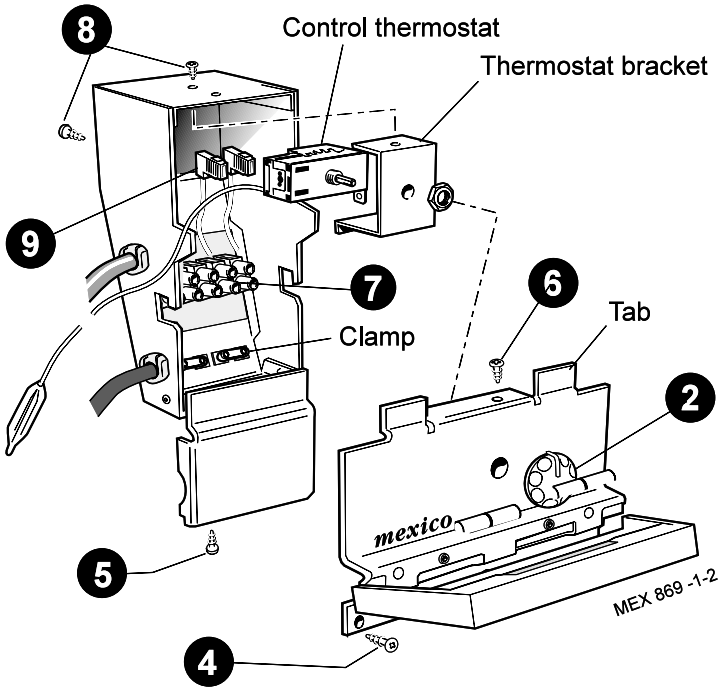

39 OVERHEAT THERMOSTAT REPLACEMENT

1. Lift off the lower front panel. Refer to Frame 27.
2. Remove the 2 screws and pull down the control panel tabs to clear the top panel.
3. Remove the split pin at the thermostat pocket and withdraw the phials from the pocket.
4. Remove the thermostat backnut.
5. Remove the 2 Eco leads.
6. Fit the new thermostat (lead polarity immaterial), ensuring that the alignment peg on the thermostat sits in the small hole adjacent to the main fixing hole, and reassemble in reverse order.

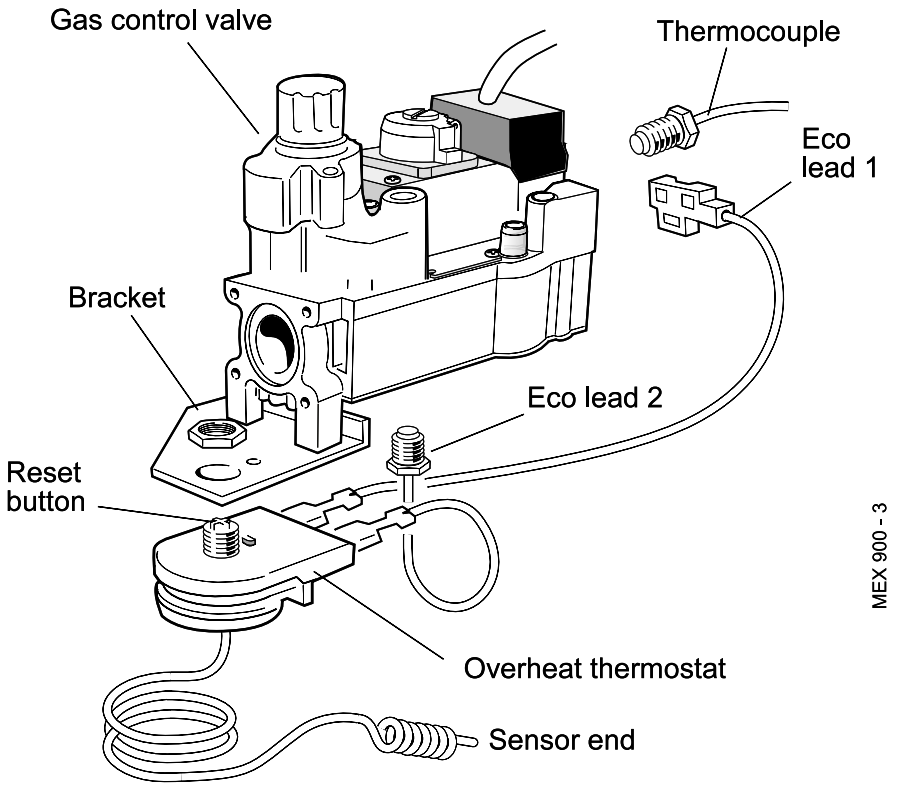

40 IGNITION LEAD REPLACEMENT

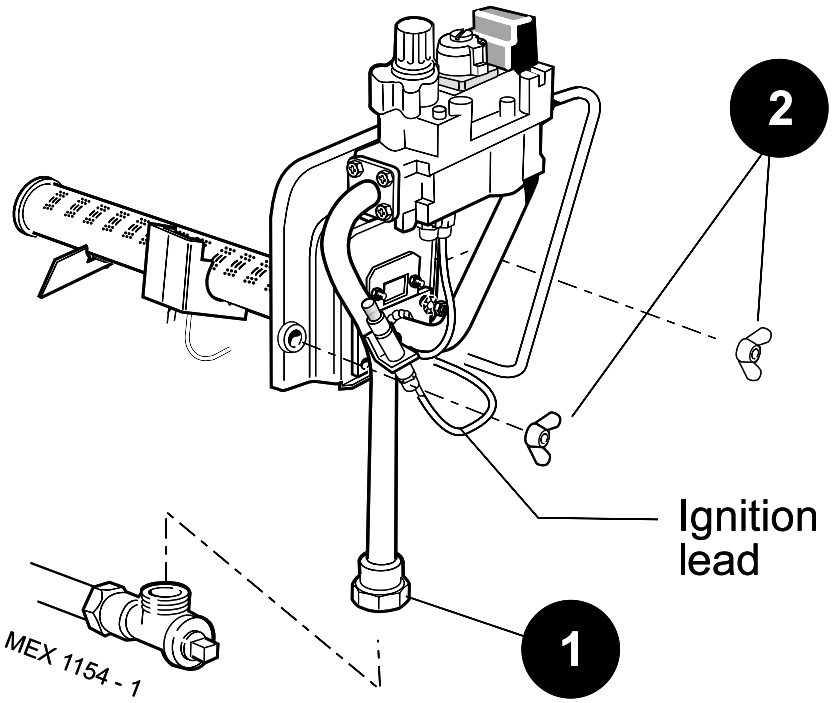

1. Lift off lower front panel and remove the grille assembly. Undo the gas cock union. Remove the burner and controls assembly. Refer to Frames 27 & 28.
2. Remove the 2 wing nuts securing the burner front plate. This complete burner/controls assembly can now be removed from the boiler.
3. The ignition lead can be removed by disconnecting at the piezo unit and the electrode.
4. Fit the new lead and re-assemble in reverse order.

41 IGNITION ELECTRODE REPLACEMENT

1. Lift off lower front panel and remove the grille assembly. Undo the gas cock union. Remove the burner and controls assembly. Refer to Frames 27 & 28.

2. Pull off the ignition lead at the electrode.

   The electrode is secured by a nut. Remove the nut and withdraw the electrode upward.

   Re-assemble in reverse order.

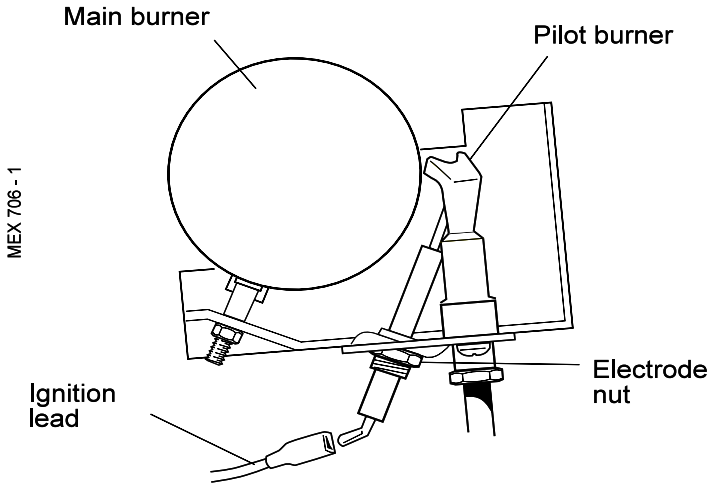

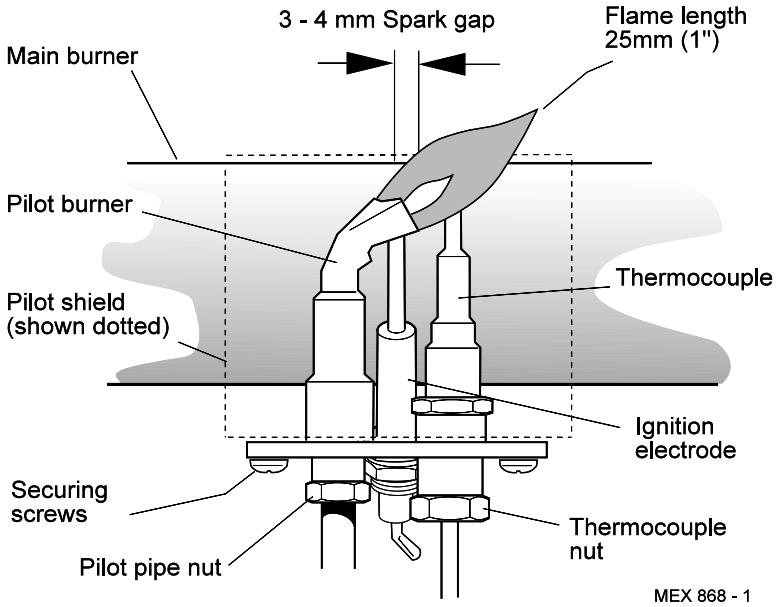

42 THERMOCOUPLE REPLACEMENT

1. Lift off lower front panel and remove the grille assembly. Undo the gas cock union. Remove the burner and controls assembly. Refer to Frames 27 & 28.

2. Undo the thermocouple nut at the pilot burner and connection at the gas valve and pull the thermocouple clear.

3. Fit the new thermocouple.

   Note. *Avoid sharp bends in the thermocouple lead and ensure that it follows the same route as previously.*

4. Re-assemble in reverse order.

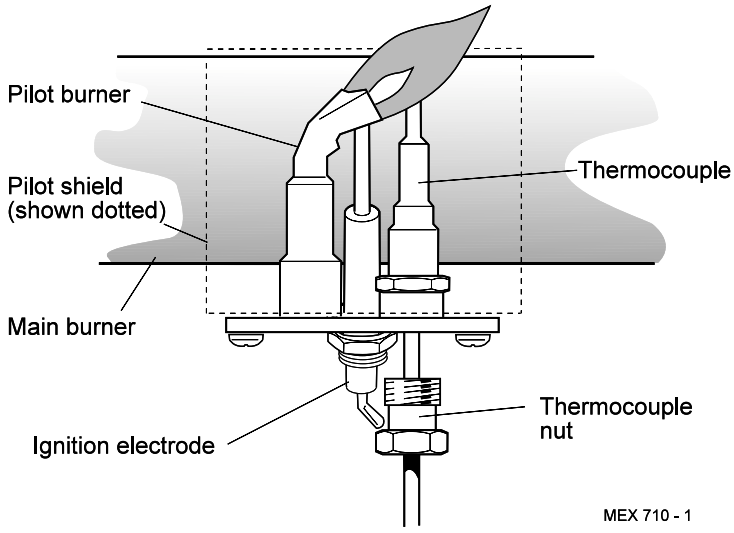

43 MAIN BURNER REPLACEMENT

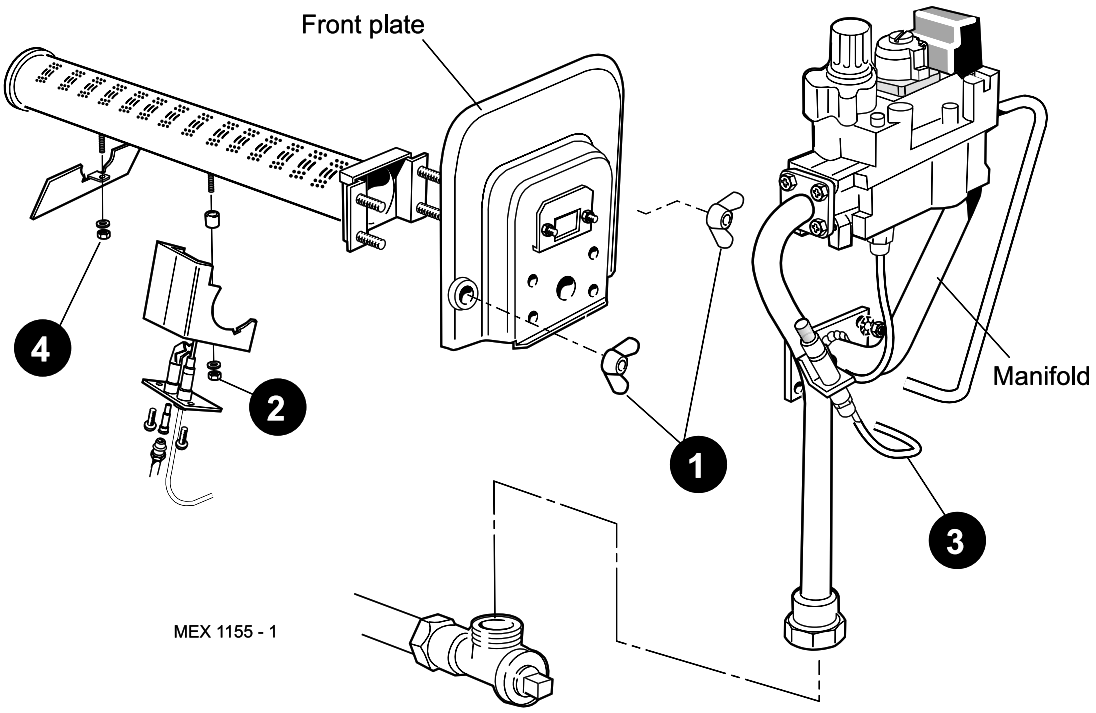

1. Lift off lower front panel and remove the grille assembly. Undo the gas cock union. Remove the burner and controls assembly. Refer to Frames 27 & 28.
   Undo the 2 wing nuts and remove the burner and controls assembly.
2. Undo the nut securing the pilot bracket to the main burner and remove the pilot bracket.
3. Remove the 4 nuts and washers securing the main burner to the front plate and gas manifold. Withdraw the burner.
4. Remove the nut securing the burner baffle to the burner.
5. Fit the new burner and re-assemble in reverse order, taking care not to damage the main burner injector which is screwed into the end of the gas manifold.

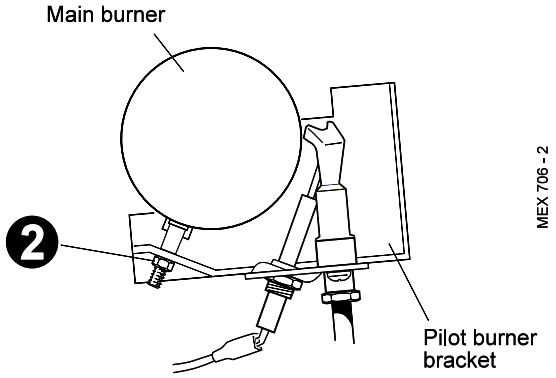

44 MAIN BURNER INJECTOR REPLACEMENT

1. Lift off lower front panel and remove the grille assembly. Undo the gas cock union. Remove the burner and controls assembly. Refer to Frames 27 & 28.
2. Unscrew the burner injector from the manifold.
3. Fit the new injector, using an approved jointing compound, and re-assemble in reverse order.

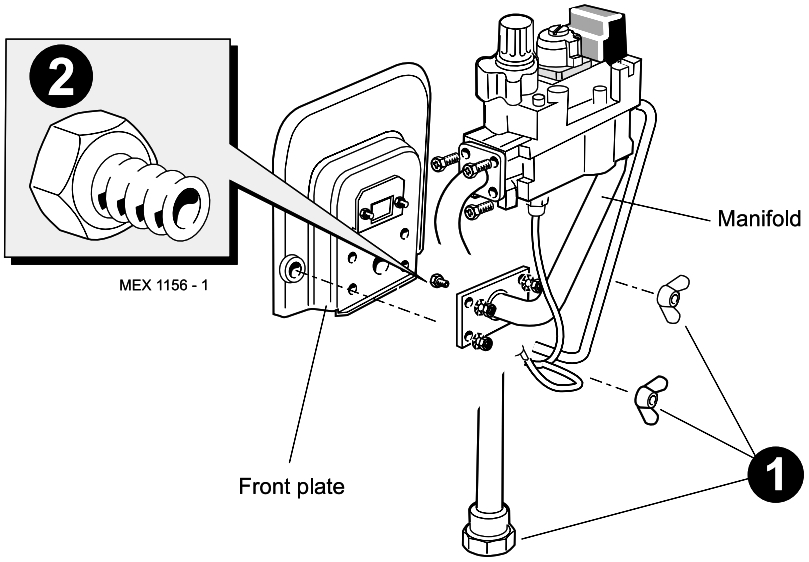

45 GAS VALVE REPLACEMENT

1. Lift off lower front panel and remove the grille assembly. Undo the gas cock union. Remove the burner and controls assembly. Refer to Frames 27 & 28.
2. Undo the pilot pipe and thermocouple connections at the gas valve.
3. Unfasten the 4 screws securing the gas inlet pipe to the LH side of the gas valve.
4. Unfasten the 4 screws securing the gas manifold. The 2 sealing 'O' rings should be discarded and new 'O' rings fitted.
5. Fit the new gas valve, ensuring that:
   - **a.** The valve is fitted the correct way round - an arrow engraved on the valve indicates the direction of flow.
   - **b.** The sealing 'O' rings supplied with the valve are correctly fitted at the inlet and outlet flanges.
6. Check the complete assembly for gas soundness.

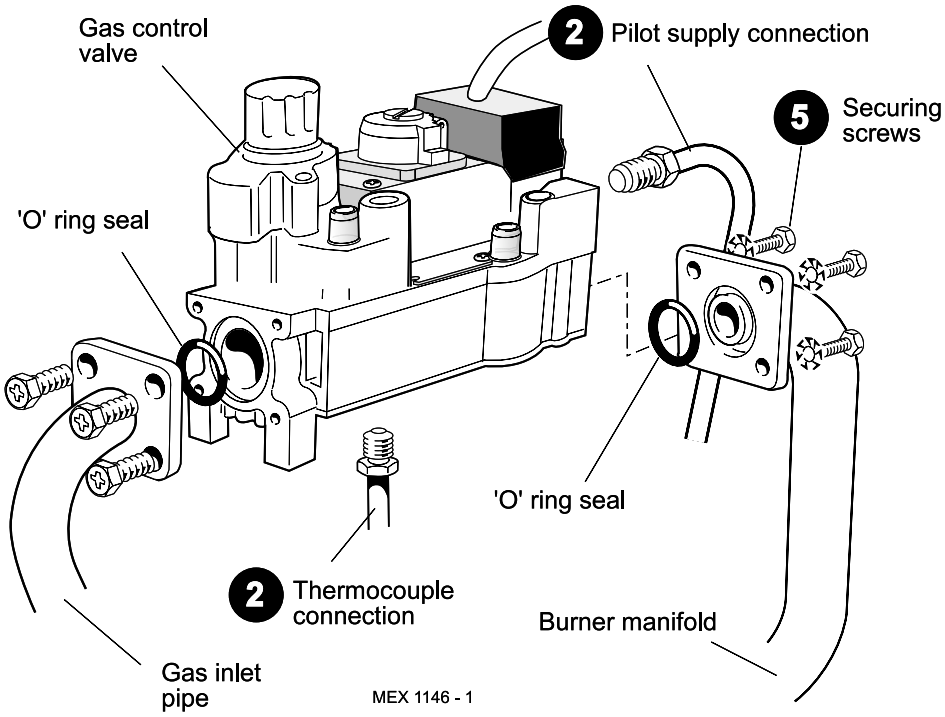

46 TTB DOWNDRAUGHT THERMOSTAT REPLACEMENT

1. Remove the control panel. Refer to Frame 38.
2. Remove the securing screw and lift off the control box cover.
3. Disconnect the TTB thermostat and remove from the cable clamp and control box. Refer to Frame 38.

   Note. *The TTB thermostat is located at the LH side of the diverter panel.*
4. Reach down the side of the boiler and carefully lift the TTB bracket from its retaining slot and clip.
5. Withdraw the thermostat, bracket and lead down the side of the boiler.
6. Locate and fit the new TTB downdraught thermostat, bracket and lead and re-assemble in reverse order, ensuring that all electrical connections are correctly remade and cables secured.

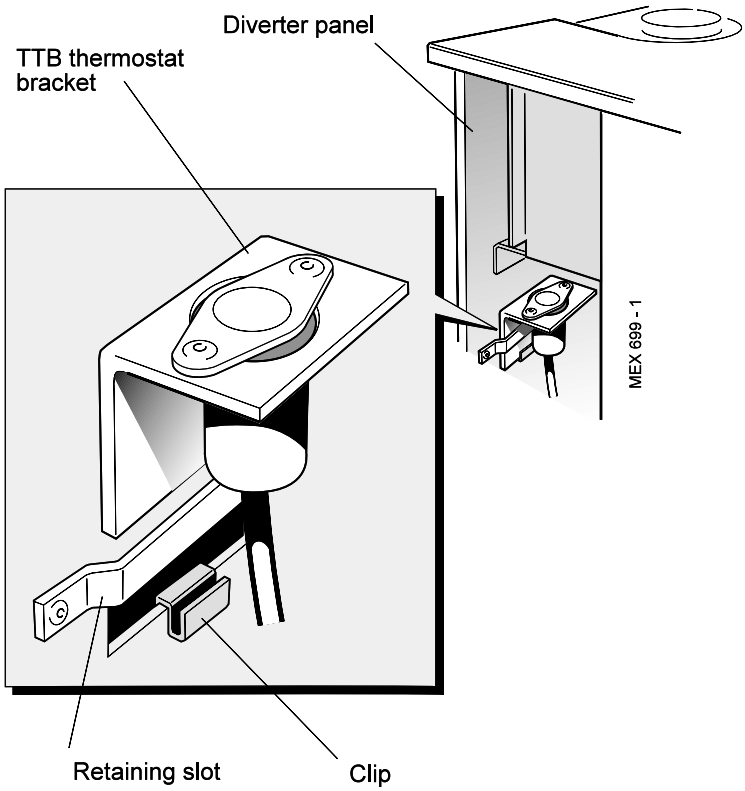

Before attempting any electrical fault finding ALWAYS carry out preliminary electrical system checks, i.e. earth continuity, polarity and resistance to earth using a suitable meter.

Detailed instructions on the cleaning and adjustment or replacement of faulty components are contained in the 'Servicing' section of this publication.

47 PILOT WILL NOT LIGHT

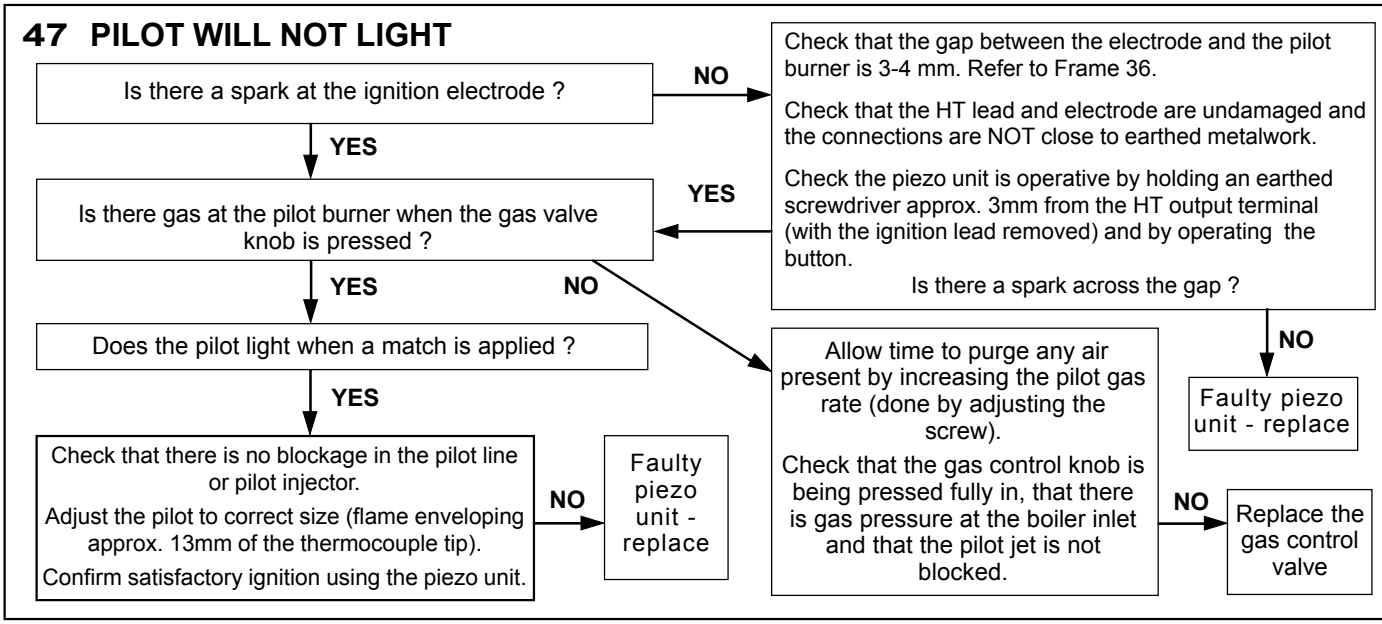

48 PILOT WILL NOT STAY LIT WHEN THE GAS CONTROL VALVE KNOB IS RELEASED

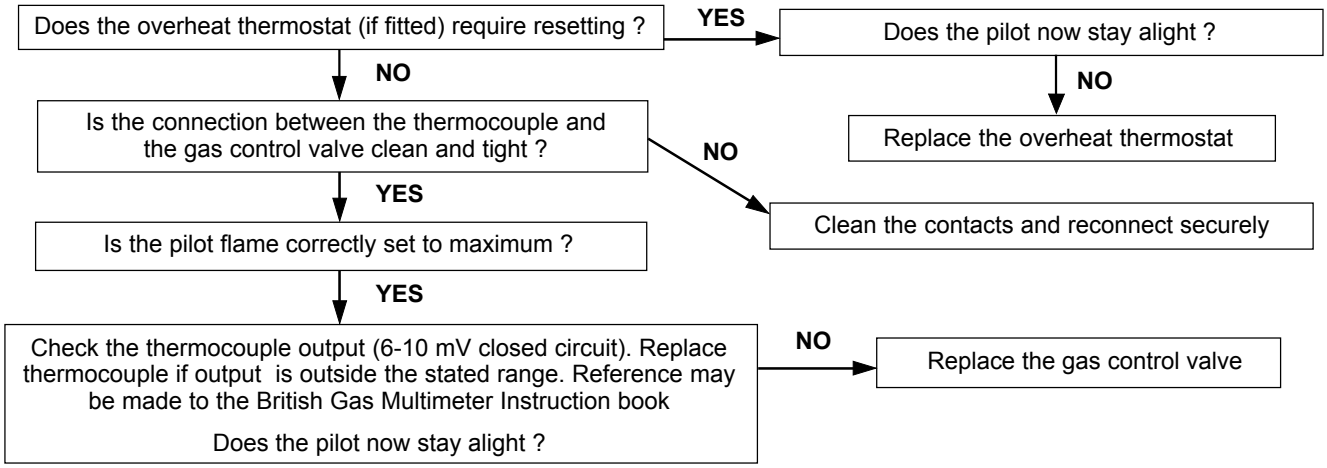

49 PILOT LIT BUT NO MAINS GAS

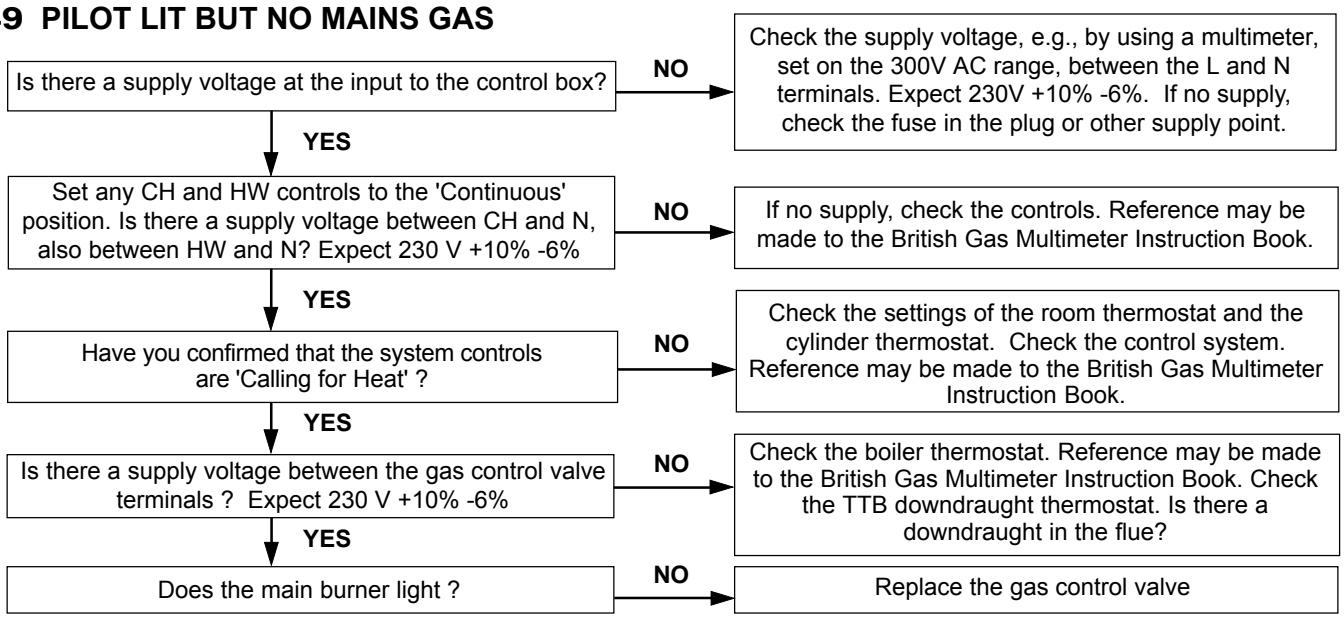

Note. *After any faults have been corrected, return all thermostatic and other controls to the previously noted settings*

SHORT LIST OF PARTS

The following are parts commonly required as replacement components, due to damage or expendability. Their failure or absence is likely to affect safety or performance of this appliance.

The list is extracted from the British Gas List of Parts, which contains all available spare parts.

The full list is held by British Gas, **Caradon Plumbing Limited** distributors and merchants.

When ordering spares please quote:

1. Boiler model
2. Appliance G.C. number
3. Description
4. Quantity
5. Product no.

Key No.	G.C. Part No.	Description	Qty.	Product No.
7	319 494	Sightglass assembly kit.	1	079 334
9	398 252	Main burner BRAY AB 16642	1	012 532
11		Main burner injector		
	398 323	BRAY Cat. 16 - size 1200: CF 3/40	1	002 608
	398 055	BRAY Cat. 10 - size 1400: CF 3/50	1	003 361
12	341 957	Pilot burner HONEYWELL Q 359A 1041, with injector Key No. 13	1	077 868
13	381 656	Pilot burner injector: HONEYWELL 45004-108-001	1	003 825
15	E01 507	Gas valve assy. (V4600A1130 - 230V)	1	079 756
17	395 705	Piezo unit - MORGAN / MATROC 60080 002.	1	003 939
18	388 396	Ignition electrode - MORGAN / MATROC	1	003 038
19	E01 412	HT lead 460mm long	1	052 888
20	390 039	Thermocouple - HONEYWELL Q 309 A 2739, 600mm lg.	1	000 842
25		Thermostat - RANCO K36-P1354	1	151 903
26	308 557	Thermostat knob	1	111 904
41	E01 415	Flue baffle CF 3/40	1	150 989
	E01 416	Flue baffle CF 3/50	1	150 938
42		Downdraught thermostat (TTB)	1	075 372

50 SHORT PARTS

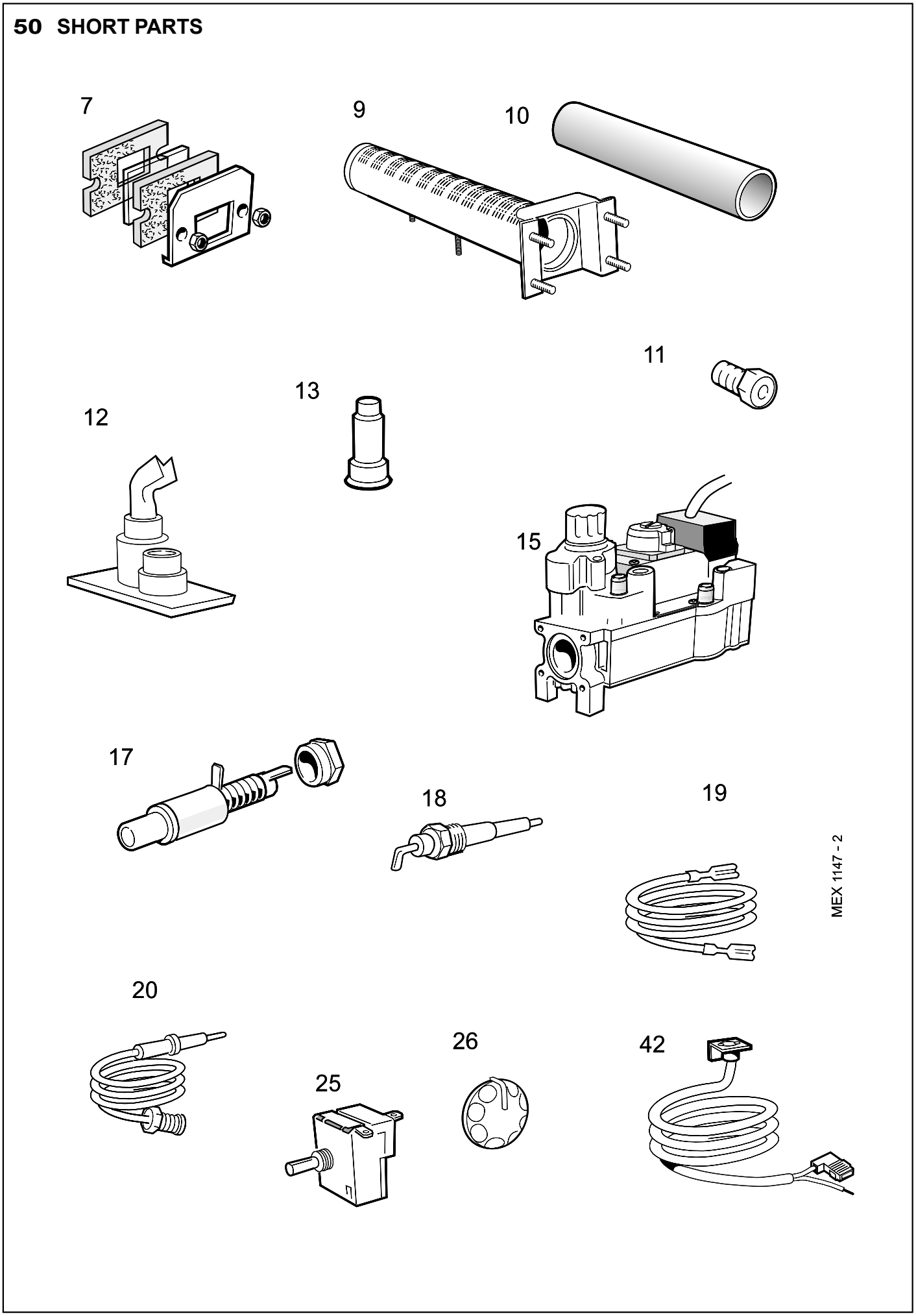

51 BURNER AND CONTROLS ASSEMBLY - Exploded View

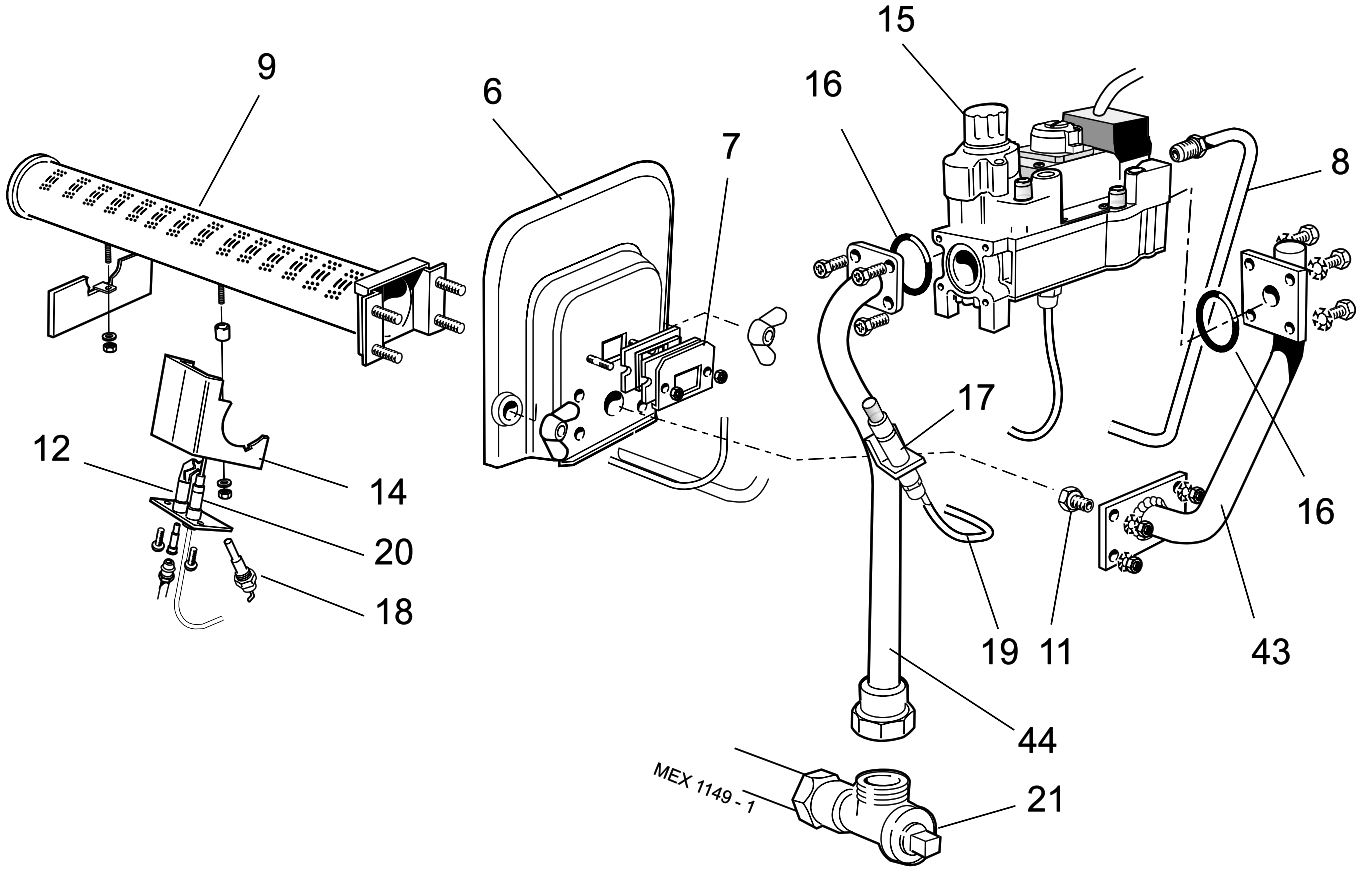

Legend

6. Front plate assembly
7. Sightglass assembly.
8. Pilot pipe.
9. Main burner.
11. Main burner injector.
12. Pilot burner.
14. Pilot burner bracket assy.
15. Gas valve.
16. 'O' ring.
17. Piezo unit.
18. Ignition electrode.
19. Ignition (HT) lead.
20. Thermocouple.
21. Gas cock.
43. Outlet pipe.
44. Inlet pipe.

52 CONTROL BOX ASSEMBLY - Exploded View

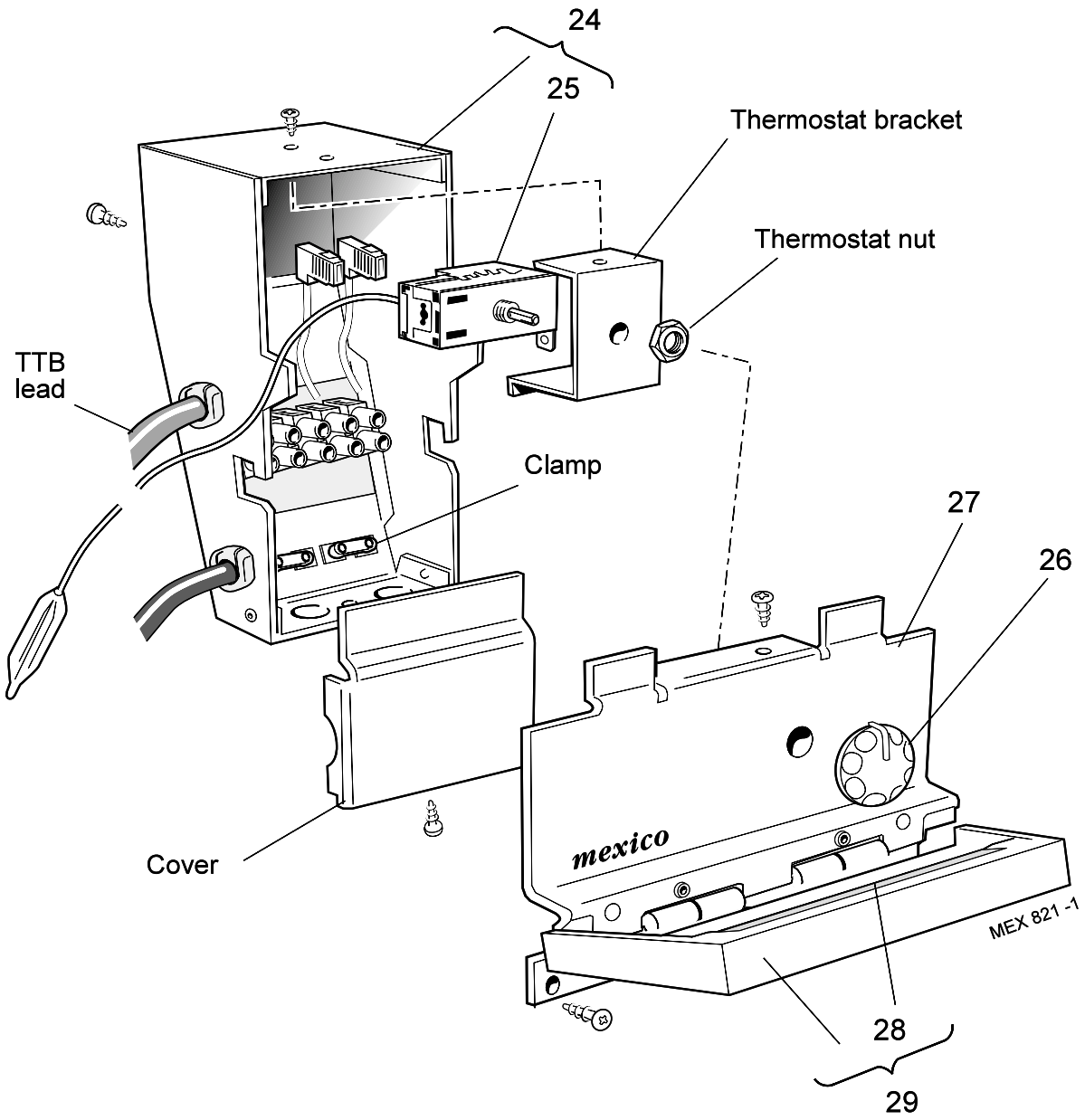

Legend

23. Control panel complete.

24. Control box.

25. Control thermostat.

26. Thermostat knob.

27. Controls panel.

28. Magnetic strip.

29. Controls front panel.

53 BOILER CASING ASSEMBLY

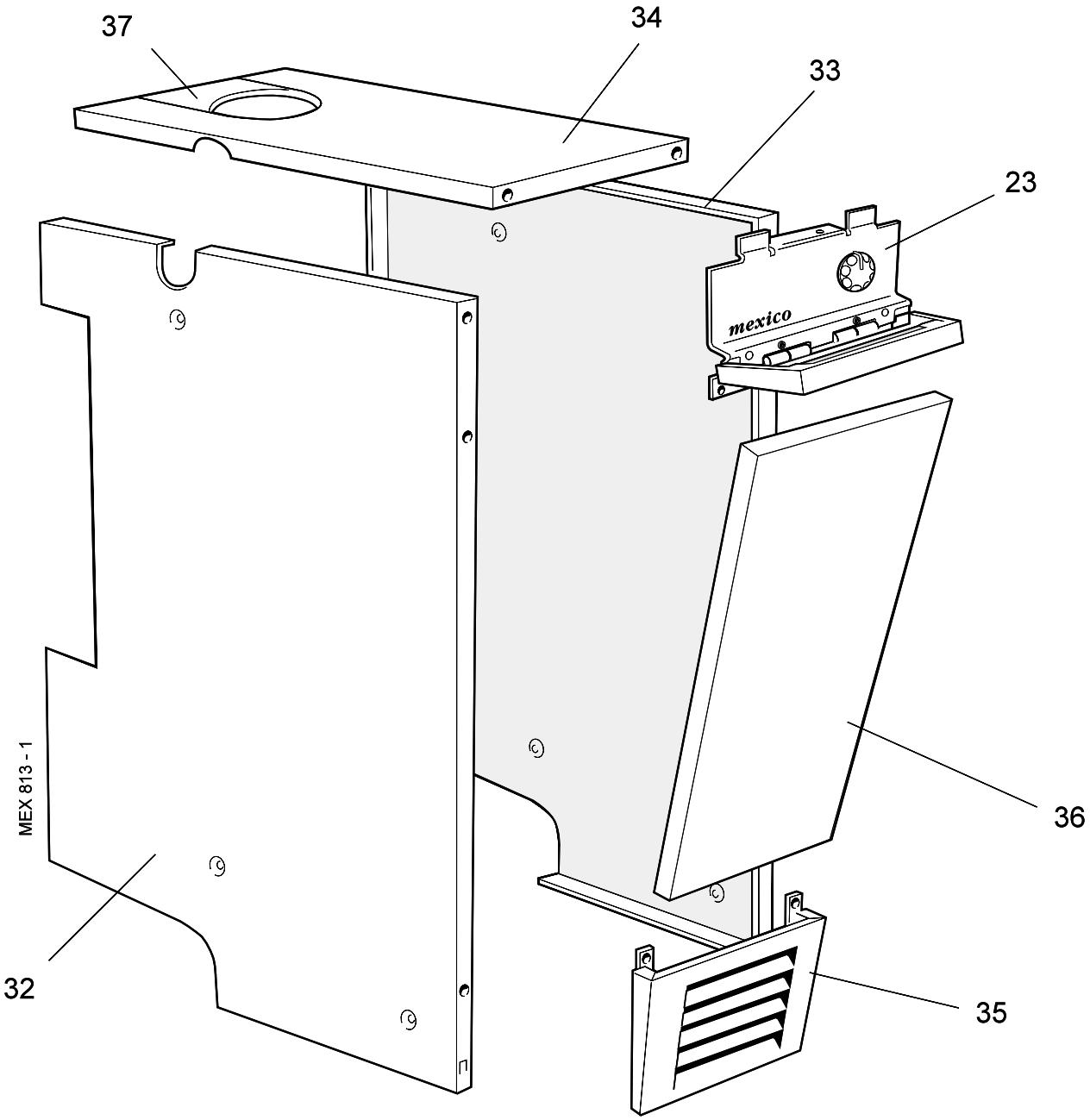

Legend

22. Casing complete.

23. Control panel complete.

32. L.H. side panel.

33. R.H. side panel.

34. Top panel.

35. Grille panel.

36. Front lower panel.

37. Top panel infill piece.

THIS SYMBOL IS YOUR ASSURANCE OF QUALITY

These appliances are designed for use with Natural Gas only. They have been tested and conform with the provisions of BS. 6332 and BS. 5258.

The code of practice for the installation, commissioning & servicing of central heating systems

CERTIFIED PRODUCT
Manufactured under a BS EN ISO 9001: 1994
Quality System accepted by BSI

Caradon Plumbing Limited, P.O. Box 103, National Ave, Kingston upon Hull, HU5 4JN. Telephone: 01482 492 251 Fax: 01482 448 858. Registration No. London 322 137. Registered Office: National Avenue, Kingston upon Hull, HU5 4JN. *A subsidiary of Caradon p.l.c*

Technical Training

The Caradon Plumbing Limited Technical Training Centre offers a series of first class training courses for domestic, commercial and industrial heating installers, engineers and system specifiers.

For details of courses please ring: *01270 413 624*

Caradon Plumbing Limited pursues a policy of continuing improvement in the design and performance of its products. The right is therefore reserved to vary specification without notice.

September 1999 151 905 A04

Ideal Installer/Technical Helpline Tel: 01482 498 663

Your feedback
and your chance to win a free boiler

At Ideal we've been leaders in the design and engineering of robust and reliable boilers for over 90 years. We want to continue as leaders by listening to your suggestions for how to improve our boilers and our service. We'll be giving away a free boiler for the five best ideas every year (to be selected by our Technical Director). Please complete this form, using extra sheets if required, and post it or fax it to us on 01482 498699.

Boiler details

Model / Size *(e.g. Classic RS 230, Mexico CF 3/60 etc. Details on control panel door)*

Date of Installation

Installer details

Name

Address

Post Code

Telephone (*Please include STD code*)

How I would improve this boiler:

My general comments for Ideal:

Caradon
Plumbing Solutions

Ideal Installer/Technical Helpline Tel: 01482 498 663

Further information

If you would like information about Ideal Boilers please complete this sheet and fax it to us on 01482 498699 or post it to Caradon Plumbing Limited, PO Box 103, National Avenue, Kingston upon Hull, HU5 4JN.

Installer details

Name

Address

Post Code

Telephone (*Please include STD code*)

General information required

- ☐ *Please send me details of Ideal Training Courses.*
- ☐ *Please arrange for a technical representative to contact me.*
- ☐ *Please arrange for me to join an Ideal factory tour.*

Range guides required

- ☐ *The Ideal Guide: a specifier's and installer's introduction to the Ideal domestic boiler range.*
- ☐ *The Ideal Householders Guide: to assist the installer when presenting to his/her customers.*

Technical manuals required

- ☐ *The Ideal C class combi boiler*
- ☐ *The Ideal Classic wall hung boiler*
- ☐ *The Ideal Classic System wall hung boiler*
- ☐ *The Ideal Classic LX Deluxe wall hung boiler*
- ☐ *The Ideal Mexico floor standing boiler*
- ☐ *The Ideal Minimiser heat-saving boiler*
- ☐ *The Ideal Response combi boiler*
- ☐ *The Ideal Response SE super efficiency combi boiler*
- ☐ *The Ideal Systemiser SE super efficiency system boiler*
- ☐ *The Ideal Concord high output boiler*
- ☐ *The Ideal Buccaneer oil fired boiler*

Caradon
Plumbing Solutions

Caradon Plumbing Limited, PO Box 103, National Avenue, Kingston upon Hull, HU5 4JN. Telephone: 01482 492251 Fax: 01482 448858.

Ideal Installer/Technical Helpline Tel: 01482 498 663

U.I.N. 151 905 A0