THE IDEAL INSTALLATION & SERVICING MANUAL

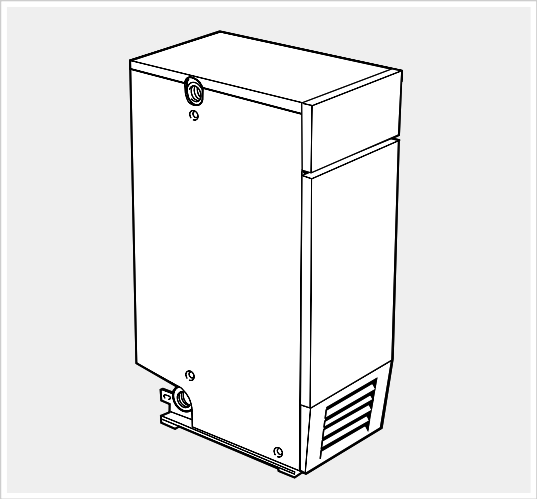

mexico

the floor standing boiler

Floor standing, gas fired, balanced flue, room sealed boiler

Mexico Slimline

RS3/40 & 3/50

Ideal BOILERS

Installers guide to domestic central heating boilers

Mexico:

The Floor Standing Gas Boiler

The Ideal Mexico is a range of cast iron floor standing gas central heating boilers. Both balanced or conventional flue versions are available. A complete range of both natural gas and propane models. The range offers Super models and, for when space is tight, there are Slimline models available.

Mexico: Britain's biggest selling floor standing boiler

The ideal replacement boiler...

Easy to install, easy to operate and easy to service. The Ideal Mexico really is the ultimate replacement floor standing range - you can depend on it.

Proven reliability...

Proven cast iron heat exchanger engineered and refined to be the most dependable floor standing boiler ensuring totally calm operation and quiet running, whatever the system demands.

Complete range...

27 models, including 4 Slimline models at only 250mm wide and 8 propane Super models. Option kit availability includes an easy to use programmer kit available on all models, an overheat thermostat kit for all models and a pump kit that can be housed within the casing, available for all models except the Super CF 3/140 & CF 3/140P.

Full system suitability...

All models are suitable for connection to pumped open vent central heating systems, pumped central heating combined with pumped or gravity indirect domestic hot water supply systems. They can also be used on sealed water systems when used in conjunction with the optional Overheat Thermostat Kit.

Free Guarantee: 1st Year Ideal Care

The home owner is entitled to 12 months free Ideal Care, which includes both parts and labour, to restore the boiler to full function. Please encourage the home owner to complete and return the registration form in their Householder's pack within 30 days of installation.

Optional Extra Year Cover with Ideal Care

You may wish to offer your own annual service plan or you may wish to advise the home owner to complete their application form for the appropriate level of extended Ideal Care - Silver, Gold or Platinum. Full details are available in the Ideal Care brochure.

CAUTION. To avoid the possibility of injury during the installation, servicing or cleaning of this appliance, care should be taken when handling edges of sheet steel components.

GENERAL

Table 1 - General Data

Boiler Size			RS 3/40	RS 3/50
Gas Supply Connection		in. BSP	Rc 1/2 (1/2)	
Flow and Return Connections			Rc 1 (1" BSP)	
MAXIMUM Static Water Head		m (ft.)	30.5 (100) (3 bar)	
MINIMUM Static Water Head		m (ft.)	1.0 (3.3)	
Electrical Supply		power consumption	230 V ~ 50 Hz 5W	
External Fuse Rating			3 A	
Water Content		litre (gal.)	20 (4.4)	
Dry Weight *excluding* balanced flue terminal		kg. (lb.)	100 (220)	
Boiler Size	Height	mm (in.)	850 (33.5)	
	Width	mm (in.)	255 (10.0)	
	Depth	mm (in.)	535 (21.0)	
Gas Type			Natural 2 H	
Gas Supply Pressure			20 mb	

Table 2 - Performance Data

Boiler Size			RS 3/40	RS 3/50
Boiler Input	MINIMUM	kW (Btu/h)	11.3 (38 500)	15.0 (51 200)
	Gas Consumption	l/s (ft.^{3}/h)	0.29 (37.0)	0.39 (49.3)
	MID	kW (Btu/h)	12.7 (43 500)	16.7 (57 100)
	Gas Consumption	l/s (ft.^{3}/h)	0.33 (47.7)	0.43 (54.7)
	MAXIMUM	kW (Btu/h)	14.5 (49 400)	18.5 (63 200)
	Gas Consumption	l/s (ft.^{3}/h)	0.37 (47.5)	0.48 (60.8)
Boiler Output to Water	MINIMUM	kW (Btu/h)	8.8 (30 000)	11.7 (40 000)
	MID	kW (Btu/h)	10.3 (35 000)	13.2 (45 000)
	MAXIMUM	kW (Btu/h)	11.7 (40 000)	14.7 (50 000)
Burner Setting Pressure (hot)	MINIMUM	mbar (in w.g.)	6.3 (2.5)	8.0 (3.2)
	MID	mbar (in w.g.)	8.0 (3.2)	10.0 (4.0)
	MAXIMUM	mbar (in w.g.)	10.4 (4.2)	12.4 (5.0)
Flue gas flow rate (maximum)		g/s	6.8	8.7
Flue gas temperature		°C	150	189
*Seasonal efficiency		(SEDBUK) %	74.4	72.8

*The value is used in the UK government's Standard Assessment Procedure (SAP) for energy rating of dwellings.
The test data from which it has been calculated have been certified by BGplc 0087

Note.

Gas consumption is calculated using a calorific value of 38.7 MJ/m^3 (1038 Btu/ft^3) gross or 34.9 MJ/m^3 (935 Btu/ft^3) nett

To obtain the gas consumption at a different calorific value:-

a. *For l/s - divide the gross heat input (kW) by the gross C.V. of the gas (MJ/m^3)*

b. *For ft^3/h - divide the gross heat input (Btu/h) by the gross C.V. of the gas (Btu/ft^3)*

Key to symbols

GB = United Kingdom **IE** = Ireland (Countries of destination)

PMS = Maximum operating pressure of water

C_{11} = A room sealed appliance designed for connection via ducts to a horizontal terminal, which admits fresh air to the burner and discharges the products of combustion to the outside without a fan in the combustion products circuit.

I_{2H} = An appliance designed for use on 2nd Family gas, Group H only.

CONTENTS

Air Supply 7

Boiler Assembly - Exploded view 9

Boiler Clearances 6

Burner Assembly - Exploded view 34

Electrical Connections 15

Electrical Diagram 16

Electrical Supply 8

Extension Ducts - Fitting 13

Fault Finding 31

Flue Fitting 13

Flue Installation 7

Gas Safety Regulations 5

Gas Supply 6

Initial Lighting 20

Installation 9

Mandatory Requirements 5

Servicing 22

Short List of Parts 32

System Electrical Diagrams 17

Terminal Guards 7

Water Circulation 7

Water Connections 14

Water Systems 14

Water Treatment 8

Mexico Slimline

Mexico Slimline RS 3/40	G.C. No. 41 348 04
Mexico Slimline RS 3/50	G.C. No. 41 348 06

B.G. Certified - P.I. No. 87 AT 14

Destination Countries: GB, IE

Natural Gas only — Appliance type: C_{11}

INTRODUCTION

The Mexico Slimline range is of floor standing, balanced flue gas boilers. They are range-rated to provide central heating outputs of:

RS 3/40 8.8 kW (30,000 Btu/h) to 11.7 kW (40,000 Btu/h).
RS 3/50 11.7 kW (40,000 Btu/h) to 14.7 kW (50,000 Btu/h).

The boiler has a cast iron heat exchanger and is supplied fully assembled, complete with a white enamelled mild steel casing.

The boiler thermostat control is located behind the upper front panel (drop down door).

The boilers are suitable, as standard, for connection to open-vented systems ONLY.

The systems may be:

- pumped or gravity circulating indirect DHW only
- pumped central heating only
- pumped central heating combined with either a pumped or gravity circulating indirect DHW circuit.

OPTIONAL EXTRA KITS

Programmer Kit	Fits neatly within the casing. Separate fitting instructions are included with this kit.
Overheat Thermostat Kit	Is available to allow the boiler to be used on sealed water systems.

NOTE TO THE INSTALLER: LEAVE THESE INSTRUCTIONS ADJACENT TO THE GAS METER. ALSO COMPLETE THE BENCHMARK LOG BOOK AND GIVE THIS TO THE CUSTOMER.

benchmark™

GAS SAFETY

Gas Safety (Installation and Use) Regulations 1994, amendments 1996 or the rules in force.

It is law that **all** gas appliances are installed by a CORGI registered installer (identified by ❀) in accordance with the above regulations. Failure to install appliances correctly could lead to prosecution. It is in your own interest, and that of safety, to ensure the law is complied with.

The installation of the boiler MUST also be in accordance with the latest I.E.E. (BS 7671) Wiring Regulations, local building regulations, bylaws of the local water authority, the Building Regulations and Building Standards (Scotland) and any relevant requirements of the local authority.

Detailed recommendations are contained in the following British Standard Codes of Practice:

BS. 6891	Low pressure installation pipes.
BS. 6798	Installation of gas fired hot water boilers of rated input not exceeding 60 kW.
BS. 5449:1	Forced circulation hot water systems (small bore and microbore domestic central heating systems).
BS. 5546	Installation of gas hot water supplies for domestic purposes (2nd Family Gases).
BS. 5440: 1	Flues for gas appliances of rated input not exceeding 60 kW.
BS. 5440: 2	Ventilation for gas appliances of rated input not exceeding 60 kW.
BS 7593	Treatment of water in Domestic Hot Water Central Heating Systems.

Health and Safety Document No. 635.

The Electricity at Work Regulations, 1989.

Manufacturer's notes must NOT be taken in any way as overriding statutory obligations.

IMPORTANT. These appliances are certificated by the British Standards Institution for safety and performance. It is important, therefore, that no external control devices, e.g. flue dampers, economisers etc., are directly connected to these appliances unless covered by these Installation and Servicing Instructions or otherwise recommended by **Caradon Plumbing Limited** in writing. If in doubt please enquire.

Any direct connection of a control device not approved by **Caradon Plumbing Limited** could invalidate the BSI Certification and the normal appliance warranty. It could also infringe the Gas Safety Regulations and the above regulations or other statutory requirements.

LOCATION OF BOILER

The boiler must be installed on a flat and level floor, capable of adequately supporting the weight of the boiler and any ancillary equipment.

The boiler may be fitted on a combustible floor.

Insulation is not necessary, unless required by the local authority.

The boiler MUST be installed against an external wall (the back of the boiler casing may be fitted up to the wall).

The boiler must not be fitted outside.

1 BOILER WATER CONNECTIONS

1. This appliance is NOT suitable for use in a direct hot water system.
2. If the boiler is to be used on a sealed system an **Overheat Thermostat Kit** is available and must be installed in accordance with the instructions supplied with the kit.
3. All water connections are Rc1 (1"BSP). The front top and bottom plugged connections must not be used. 2 spare blanking off plugs are provided, in the hardware pack, for use as necessary in the rear flow or return water connections.
4. Pipework connections to all systems may use flow and return connections on the same side, or opposite sides of the boiler.

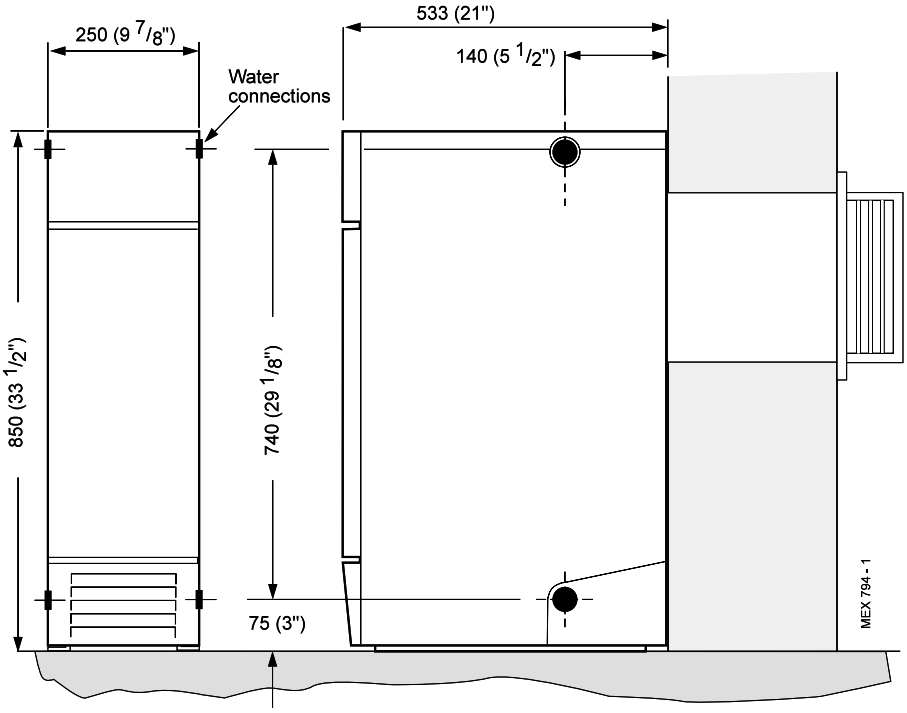

That is:

Fully pumped system
In a fully system, either a LH or a RH flow connection, together with LH or RH return connection, may be used.

Gravity domestic hot water and pumped central heating.
In a gravity DHW and pumped CH system separate flow and return connections are used for each service.

The use of a cylinder thermostat is recommended. This will prevent excessive domestic hot water temperatures.

Timber Framed Buildings

If the boiler is to be fitted in a timber framed building it should be fitted in accordance with the Institute of Gas Engineering document IGE/UP/7:1998.

Bathrooms

The boiler may be installed in any room or internal space, although particular attention is drawn to the requirements of the current I.E.E. (BS 7671) Wiring Regulations and, in Scotland, the electrical provisions of the building regulations applicable in Scotland with respect to the installation of the boiler in a room or internal space containing a bath or shower.

Where a room-sealed appliance is installed in a room containing a bath or shower then the appliance and any electrical switch or appliance control utilising mains electricity should be so situated that it cannot be touched by a person using the bath or shower.

Where installation will be in an unusual location, special procedures may be necessary and BS.6798 gives detailed guidance on this aspect.

Compartment Installations

A compartment used to enclose the boiler MUST be designed and constructed specially for this purpose.
An existing cupboard or compartment may be used, providing it is modified for the purpose.

Details of essential features of cupboards/compartment design, including airing cupboard installation, are to conform to the following:

- BS. 6798.
- The position selected for installation MUST allow adequate space for servicing in front of the boiler and for air circulation around the boiler.

  Side clearance is only necessary for installation. The amount of side clearance will depend upon the type of connection used. Where side units are modified to facilitate installation then no clearance is required.
- This position MUST also permit the provision of a satisfactory flue termination.
- For the minimum clearances required for safety, and subsequent service, see Frame 2.

GAS SUPPLY

The local gas supplier should be consulted, at the installation planning stage, in order to establish the availability of an adequate supply of gas. An existing service pipe must NOT be used without prior consultation with the local gas supplier.

The boiler is to be installed only on a gas supply with a governed meter.

2 FLOOR MOUNTING AND BOILER CLEARANCES

Flammable materials must not be placed in close proximity to the appliance. Materials giving off flammable vapours must not be stored in the same room as the appliance.

FLOOR MOUNTING

1. The floor must be flat, level and of suitable load bearing capacity.
2. The back of the boiler may be fitted up to the wall.

BOILER CLEARANCES

The minimum overall dimensions of the space in which the boiler is to operate and to facilitate servicing are as follows:

Boiler Size	Width	Depth	Height
RS 3/40 and RS 3/50	260 mm (10 1/4")	533 mm (21")	870 mm (34 1/4")

IMPORTANT.

In addition a MINIMUM clearance of 533 mm (21") MUST be available at the front of the boiler, for servicing.

Terminal sizes

Boiler Size	Depth (Face to wall)	Width	Height
RS 3/40 and RS 3/50	107 mm (4 1/4")	198 mm (7 3/4")	281 mm (11")

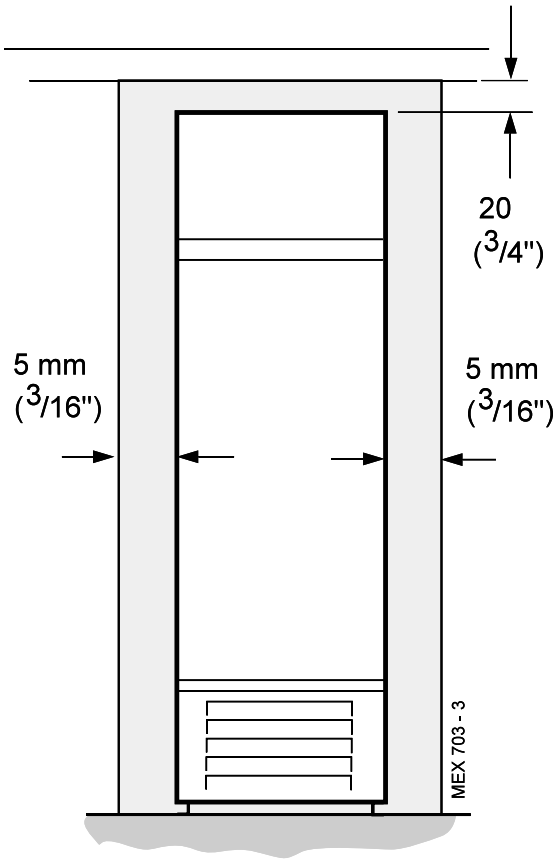

A gas meter can only be connected by the local gas supplier or by a local regional contractor.

Check that the appliance is suitable for the proposed gas supply. An existing meter should be checked, preferably by the gas supplier, to ensure that the meter is adequate to deal with the rate of gas supply required. A **minimum** gas pressure of 20 mbar MUST be available at the boiler inlet, with the boiler operating.

Installation pipes MUST be fitted in accordance with BS. 6891. Pipework from the meter to the boiler MUST be of an adequate size. Do not use pipes of a smaller size than the boiler gas connection.

The complete installation MUST be tested for gas soundness and purged as described in the above code.

FLUE INSTALLATION

Some pluming may occur at the termination, so terminal positions where this could cause a nuisance should be avoided.

The flue must be installed in accordance with the recommendations of BS. 5440:1.

The following notes are intended for general guidance:-

1. The boiler MUST be installed so that the terminal is exposed to external air.
2. It is important that the position of the terminal allows the free passage of air across it at all times.

Table 3 - Balanced flue terminal position

Terminal Position	*Minimum* Spacing
1. Directly below an opening window, air vent or other ventilation opening	300 mm (12")
2. Below guttering *, drain pipes or soil pipes	300 mm (12")
3. Below eaves *	300 mm (12")
4. Below balconies or a car port roof	600 mm (24")
5. From vertical drain pipes or soil pipes	75 mm (3")
6. From internal or external corners	600 mm (24")
7. Above adjacent ground, roof or balcony level	300 mm (12")
8. From a surface facing the terminal	600 mm (24")
9. From a terminal facing a terminal	600 mm (24")
10. From an opening in a car port (e.g. door or window) into dwelling	1200 mm (48")
11. Vertically from a terminal on the same wall	1500 mm (60")
12. Horizontally from a terminal on the wall	300 mm (12")

3. Minimum acceptable spacing from the terminal to obstructions and ventilation openings are specified in Table 3.
4. Where the lowest part of the terminal is fitted less than 2m (6' 6") above a balcony, above ground or above a flat roof to which people have access then the terminal MUST be protected by a purpose designed guard.

   Terminals guards are available from boiler suppliers - ask for Tower Flue Guard, Model K1. In case of difficulty seek advice from:

   Tower Flue Components Ltd.,

   Vale Rise, Tonbridge, Kent TN9 1TB

   Telephone No. 01732 351 555

   Ensure that the guard is fitted centrally
5. Where the terminal is fitted within 1000mm (39 1/2") of a plastic or painted gutter or 500mm (19 1/2") of painted eaves then an aluminium shield at least 1000mm (39 1/2") long should be fitted to the underside of the gutter or painted surface.
6. The air inlet/products outlet duct and the terminal of the boiler MUST NOT be closer than 30mm (2") to combustible material. Detailed recommendations on the protection of combustible material are given in BS.5440: 1.

IMPORTANT. It is absolutely ESSENTIAL to ensure, in practice, that products of combustion discharging from the terminal cannot re-enter the building or any other adjacent building through ventilators, windows, doors, other sources of natural air infiltration or forced ventilation/air conditioning. If this should occur, the appliance MUST be turned OFF, labelled 'unsafe' and corrective action taken.

TERMINAL

The terminal assembly can be adapted to accommodate various wall thicknesses. Refer to Frame 9.

AIR SUPPLY

Detailed recommendations for air supply are given in BS.5440:2. The following notes are for general guidance:

1. It is NOT necessary to have a purpose provided air vent in the room or internal space in which the boiler is installed.
2. If the boiler is to be installed in a cupboard or compartment, permanent air vents are required (for cooling purposes) in the cupboard/compartment, at both high and low levels. The air vents must either communicate with room/internal space, or be direct to outside air. The minimum effective areas of the permanent air vents, required in the cupboard/ compartment, are specified in Table 4 and are related to maximum rated heat input.
3. Both air vents MUST communicate with the same room or internal space or MUST be on the same wall to outside air.
4. In siting the air vents care must be taken to avoid the freezing of pipework.

Table 4 - High and low vent areas

Boiler	Air from room/internal space cm² (in.²)		Air direct from outside cm² (in.²)	
	High level	Low level	High level	Low level
RS 3/40	140 (22)	140 (22)	70 (11)	70 (11)
RS 3/50	190 (30)	190 (30)	95 (15)	95 (15)

WATER CIRCULATION SYSTEM

The boiler must NOT be used for direct hot water supply.

The following indirect open vented systems are suitable:

- Combined gravity domestic hot water (DHW) and pumped central heating (CH)
- Combined pumped gravity domestic hot water and pumped central heating.
- Pumped central heating only.
- Gravity domestic hot water only, up to a minimum domestic hot water cylinder storage capacity of 180 litres (40 gal.)

The resistance with an 11 °C temperature difference will be approximately 2 in.w.g. (5 mbar).

Table 5 - Water Flow Rate and Pressure Loss

Boiler size		RS 3/40	RS 3/50
Boiler output	kW	11.7	14.7
	Btu/h	40 000	50 000
Water Flow	l/sec	0.25	0.32
	gpm	3.3	4.2
Pressure Loss	kPa	0.27	0.40
	m	0.027	0.04
	ft	0.09	0.16

The central heating system should be in accordance with BS. 6798 and, in addition, with BS. 5449:1 for smallbore and microbore systems.

The domestic hot water system, if applicable, should be in accordance with the relevant recommendations of BS. 5546.

Copper tubing to BS. 2871:1 is recommended for water carrying pipework.

The hot water storage cylinder MUST be of the indirect type and should preferably be manufactured of copper.

The hot water cylinder and ancillary pipework not forming part of the useful heating surface should be lagged to prevent heat loss and any possible freezing, particularly where pipes run through roof spaces and ventilated underfloor spaces.

The flow and return connections to a fully pumped system may be made either at one side of the boiler or diagonally, to suit convenience. In a combined pumped heating and gravity domestic hot water system the gravity flow and return connections must be made to the same side of the boiler and the pumped connections to the opposite side.

IMPORTANT

The boiler must be vented. If venting cannot be done via a flow connection a separate vent MUST be fitted by the installer.

Draining taps MUST be located in accessible positions, which permit the draining of the whole system - including the boiler and hot water storage vessel. They should be at least 1/2" BSP nominal size and be in accordance with BS. 2879.

WATER TREATMENT

The heat exchangers fitted to these boilers have been internally treated with aluminium paint and only **Fernox Copal** or **Sentinel X100** water treatment products should be used. For further information on these products contact:

Fernox Manufacturing Co. Ltd.,
Britannica Works
Clavering
Essex
CB11 4QZ

Tel: 01799 550 811

or

Sentinel Division
Betz Dearborn
Widnes
Cheshire
WA8 8UD

Tel: 0151 424 5351

THERMOSTATIC RADIATOR VALVES

Caradon Plumbing Limited recommend that heating systems utilising full thermostatic radiator valve control of temperature in individual rooms should also be fitted with a room thermostat controlling the temperature in a space served by radiators not fitted with such a valve, as stated in BS. 5449.

When thermostatic radiator valves are used, the space heating temperature control over a living / dining area or hallway having a heating requirement of at least 10% of the boiler heat output should be achieved using a room thermostat, whilst other rooms are individually controlled by thermostatic radiator valves. However, if the system employs thermostatic radiator valves on all radiators, or two port valves without end switches then a bypass must be fitted in order to ensure a flow of water should all the valves be in the closed position.

ELECTRICAL SUPPLY

WARNING. The appliance MUST be efficiently earthed.

Wiring external to the appliance MUST be in accordance with the current I.E.E. (BS 7671) Wiring Regulations and any local regulations which apply.

The boiler is supplied for 230 V ~ 50 Hz single phase.

The fuse rating is 3A.

Connection must be made in a way that allows complete isolation of the electrical supply - such as a double pole switch, having a 3mm (1/8") contact separation in both poles, or a plug and socket serving only the boiler and system controls.
The means of isolation must be accessible to the user after installation.

For bathroom installations the point of connection to the mains must be situated outside the bathroom.

3 BOILER ASSEMBLY - Exploded View

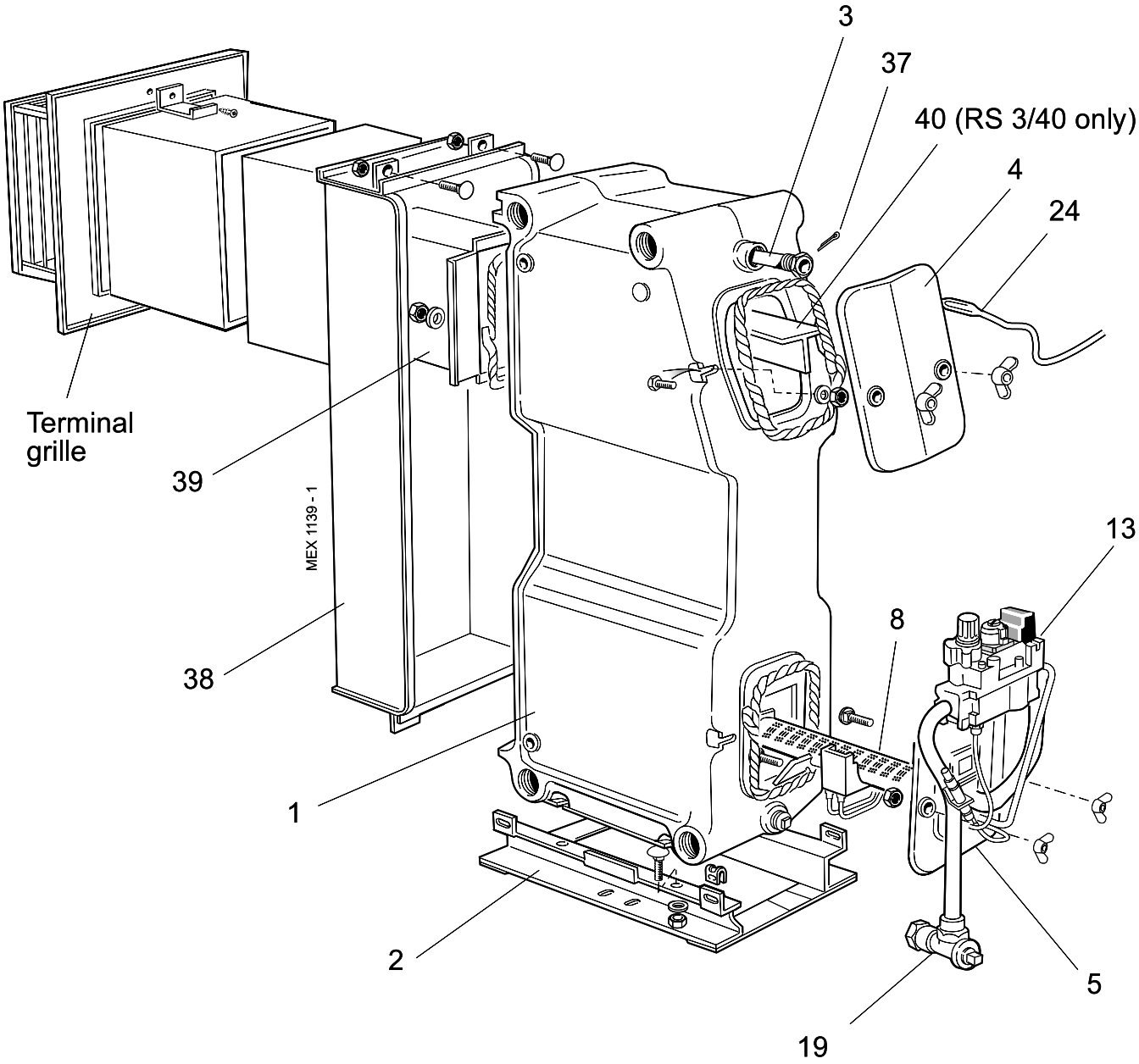

LEGEND

1. Heat exchanger.
2. Boiler feet assy.
3. Thermostat pocket.
4. Cleanout cover.
5. Front plate.
8. Main burner.
13. Gas valve.
19. Gas service cock.
38. Air duct.
39. Flue duct.
40. Flue baffle (RS 3/40 only)

4 UNPACKING

To avoid damage to the boiler casing it is recommended that the casing is removed BEFORE THE BOILER BODY IS TAKEN OFF THE PALLET.

The boiler is supplied fully assembled in **Pack A,** together with either one or two of four packs: **B, B1, C or D.**

Packs B, B1 or **C** contain the flue terminal appropriate to the wall thickness. **Pack D** contains the flue terminal extensions.

Unpack and check the contents.

FLUE PACKS:

PACKS B, B1 AND C CONTENTS

- Flue terminal assembly

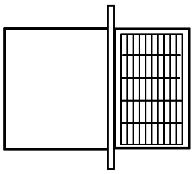

- Sachet of sealing mastic - 2 off

PACK D CONTENTS

- Flue terminal extension

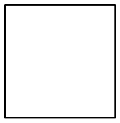

- sachet of sealing mastic - 2 off

- Adhesive tape

PACK 'A' CONTENTS

- complete boiler assembly
- the Hardware Pack (listed separately)
- these Installation and Servicing Instructions
- User's Instructions.

complete boiler assembly

HARDWARE PACK

- 1" BSP plugs - 2 off

- Split pin - 1 off

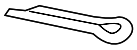

- Arrow label - 1 off

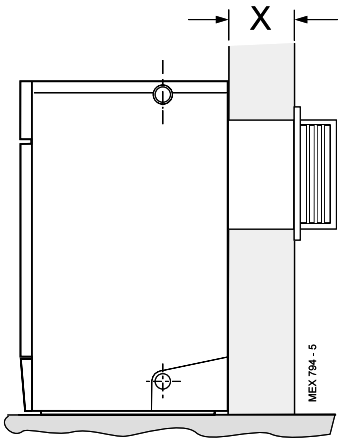

Table 6: shows the number of flue packs required for the given wall thicknesses

Wall thickness Dimension (duct length) X, shown above				Flue pack(s) required
Boiler fitted flush with wall		**Boiler fitted in line with 600 mm kitchen units**		
114 to 191 mm	(4 1/2" to 7 1/2")	up to 125 mm	(up to 5")	**C**
229 to 305 mm	(9" to 12")	163 to 242 mm	(6 1/2" to 9 1/2")	**B**
318 to 394 mm	(12 1/2" to 15 1/2")	253 to 332 mm	(10" to 13")	**B1**
406 to 584 mm	(16" to 23")	340 to 518 mm	(13 1/2" to 20 1/2")	**B & D**

5 BOILER CASING REMOVAL

It is preferable to removed the casing to install the boiler

1. Lift off the lower front panel.
2. Remove 2 screws and lift off the grille assembly.
3. Remove the gas valve cover by removing the retaining screw. Disconnect the electrical leads.
4. Release the gas valve lead from the retaining clip.
5. Remove the 2 screws securing the control panel and disengage the panel by lowering and pulling it forward.
6. Remove the 2 screws securing the top panel to the side.

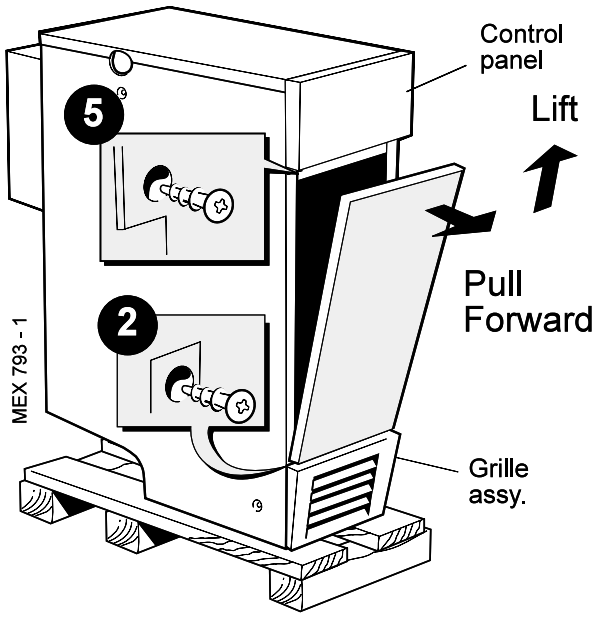

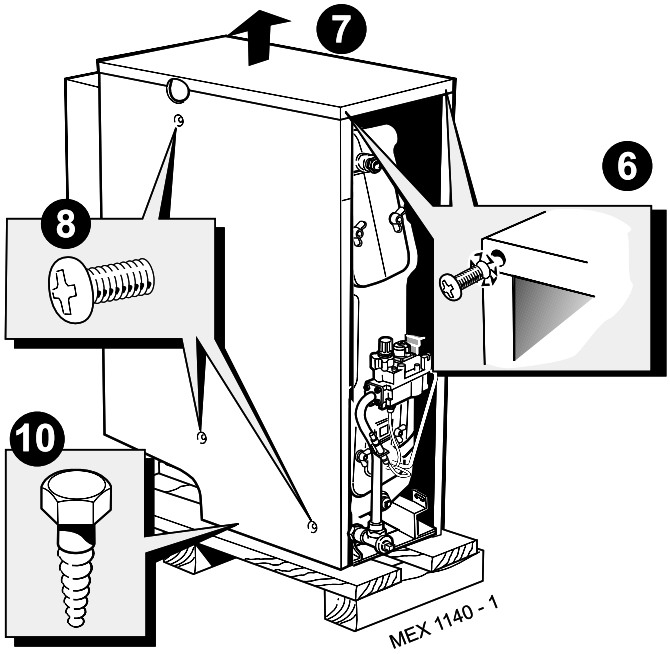

7. Lift the top panel off the boiler.
8. Remove the 3 screws securing each side panel to the boiler.
9. Remove the side panel.
10. The boiler is held to the packaging base by 2 M6 hex. head screws. Remove the screws and remove the boiler from the packaging base.

6 CHECKING THE FLUEWAY BAFFLES - RS 3/40 ONLY

1. Remove the flue cleanout cover.
2. Check that the baffle is seated correctly.

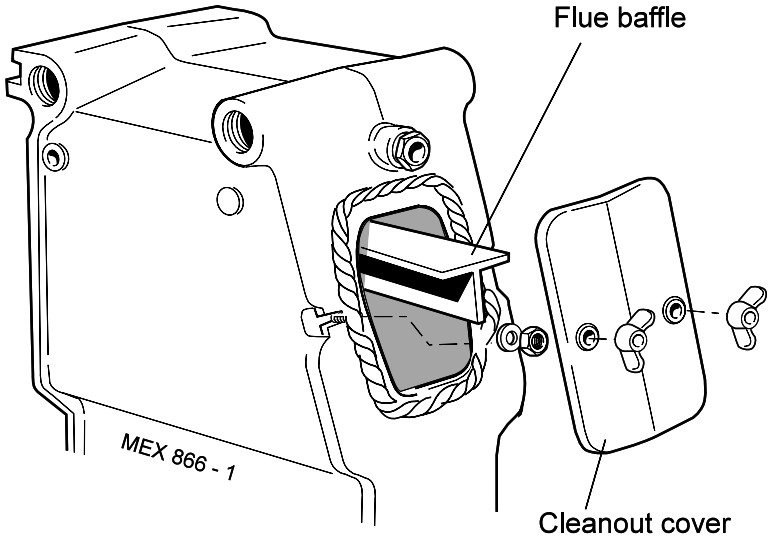

7 PREPARING THE WALL

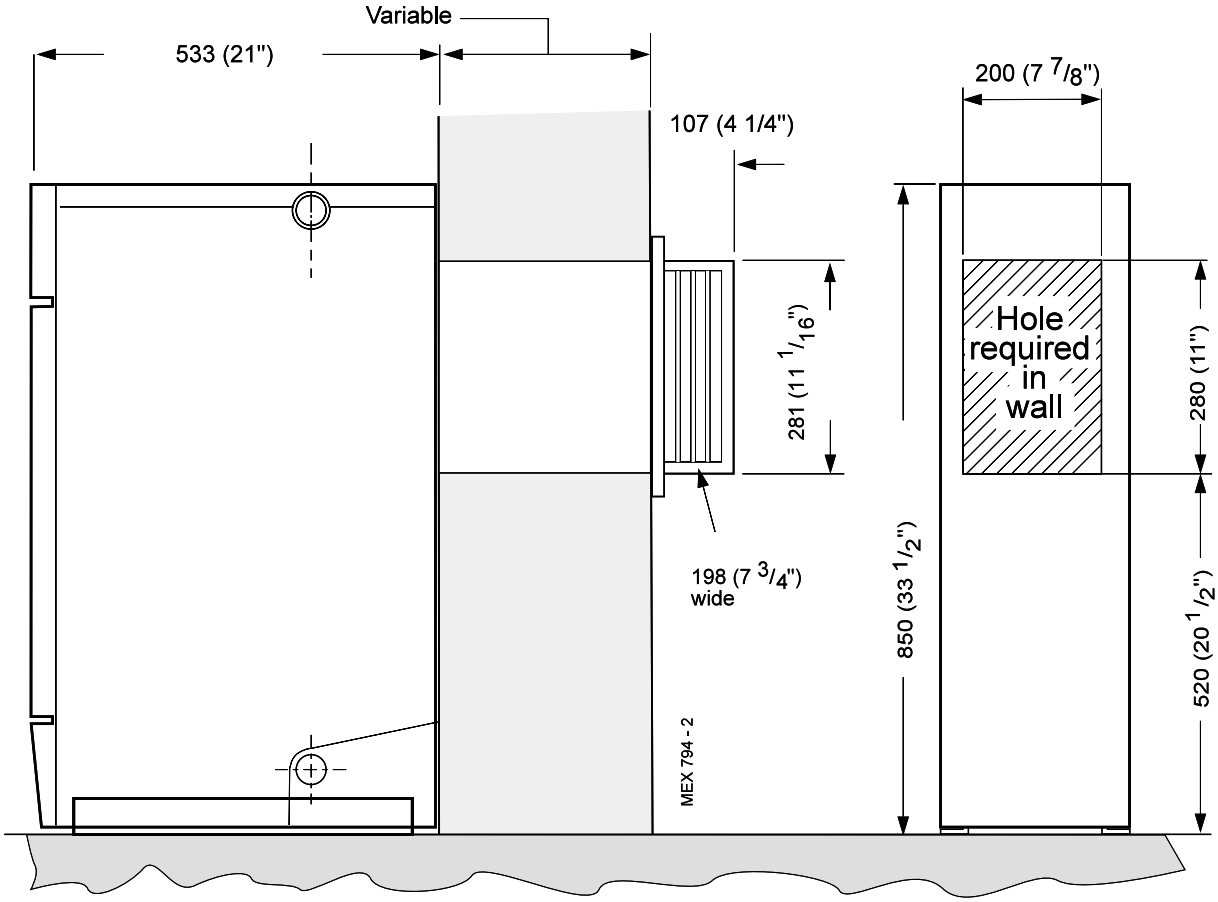

1. Cut the appropriate hole in the wall for insertion of the terminal assembly.

Notes.

a. *Make good the hole on the INSIDE of the building to the given dimensions BEFORE fitting the boiler, to facilitate sealing between the terminal and the wall when the boiler is in position.*

b. *The terminal MUST NOT come into contact with a combustible material such as that used in non-standard construction of timber frame and plasterboard etc.*

2. Place the boiler in the selected position.

Note.

If an extension duct D is to be fitted, this must be done BEFORE the boiler is placed in position. Refer to Frame 9.

3. Make good the brickwork around the air duct inside.

8 FITTING THE FLUE ASSEMBLY - Duct lengths up to 400 mm (16")

Flue Terminal assembly

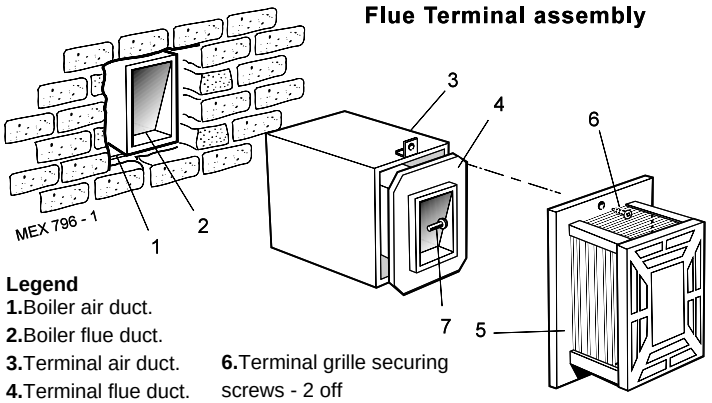

Legend
1.Boiler air duct.
2.Boiler flue duct.
3.Terminal air duct.
4.Terminal flue duct.
5.Terminal grille.
6.Terminal grille securing screws - 2 off
7.Terminal flue securingscrews - 4 off

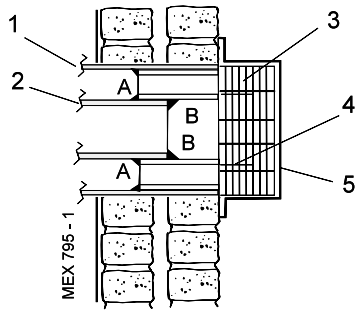

Flue terminal shown in position

1. Remove the 2 securing screws (6) and separate the terminal grille from the terminal assembly.
2. Remove the 4 securing screws (7) and separate the terminal flue duct from the terminal air duct.
3. From OUTSIDE of the building, pass the terminal air duct through the wall opening and slide it into the boiler air duct, locating it as shown.
4. Push the terminal air duct fully in until the fixing brackets contact the wall face.
5. Ensure that the duct is level and make good between the wall and duct, from OUTSIDE of the building.
6. From OUTSIDE of the building, seal the air duct join (A) with the mastic provided.
7. From OUTSIDE of the building, pass the terminal flue duct through the wall opening and slide it into the boiler flue duct. Locate it as shown and fix it in position with the 4 screws previously removed.
8. From OUTSIDE of the building seal the flue duct join (B) with the mastic provided.
9. Fasten the terminal grille to the duct assembly.

9 EXTENSION DUCTS - Duct lengths greater than 400 mm (16")

Extension ducts shown fitted

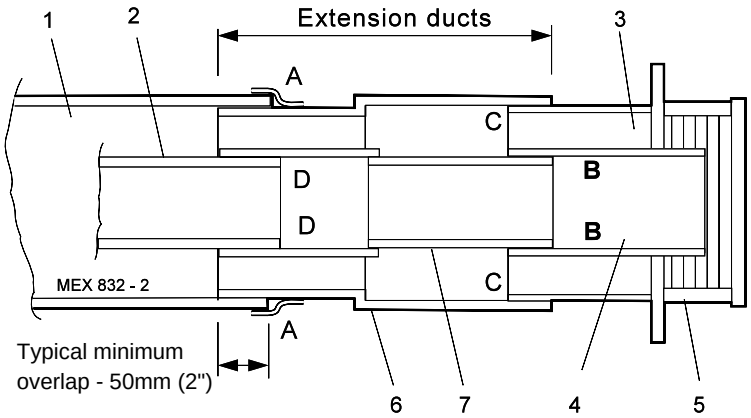

Legend
1. Boiler air duct
2. Boiler flue duct
3. Terminal air duct
4. Terminal flue duct
5. Terminal grille
6. Extension air duct
7. Extension flue duct

A. Air duct join
B. Flue duct join
C. Terminal air duct join
D. Terminal flue duct join

1. BEFORE PLACING THE BOILER IN POSITION, loosely fit the extension air duct and terminal assembly to the boiler air duct and adjust to the required overall duct length.

   Note.
   Ensure that any of the duct overlaps are not less than 50 mm (2").
2. Secure the extension air duct in position, using the adhesive tape provided, at join (A). Ensure that a good seal is made, particularly at the 2 bottom corners where the boiler duct is flanged .
3. Remove the terminal assembly.
4. Place the boiler in position, entering the extension duct into the wall opening.
5. Make good the brickwork around the air duct inside.
6. Separate the terminal grille, terminal air duct and terminal flue duct. Refer to Frame 8.
7. From OUTSIDE of the building, pass the terminal air duct through the wall opening and slide it into the extension air duct, locating it as shown.
8. Push the duct fully in until the fixing brackets contact the wall face.
9. Ensure that the duct is level and make good between the wall and the duct from OUTSIDE of the building.
10. From OUTSIDE of the building, seal the duct join (C) with the mastic provided
11. From OUTSIDE of the building, slide the extension flue duct into the boiler flue duct to the same distance as the extension air duct. Seal the duct join (D) with the mastic provided
12 Go to Frame 8 note 7.

10 GAS CONNECTION

1. A MINIMUM working gas pressure of 20 mbar (8 in.w.g.) MUST be available at the boiler inlet, with the boiler operating.
2. Extend a gas supply pipe NOT LESS THAN 15mm (1/2") OD to the boiler and connect to the gas cock situated at the bottom LH side of the boiler. Attachment to the gas supply may be either left or right hand.
3. Test the gas installation for soundness and purge in accordance with BS.6891: 1988. Refer to Frame 23.

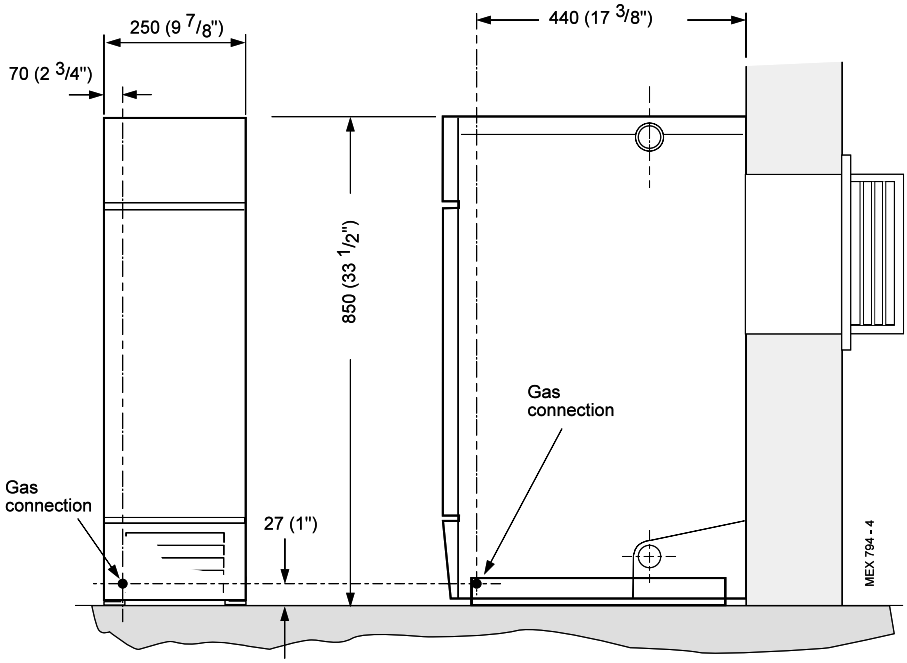

11 WATER CONNECTIONS

Notes.

a. *Isolating valves must be fitted as close to the pump as possible.*

b. *The boiler is not suitable for use with a direct hot water cylinder.*

c. *Gravity connections MUST be at least 28 mm (1").*

d. *The front top and bottom plugged connections MUST NOT BE USED.*

e. *2 spare blanking off plugs are provided in the Hardware Pack for use as necessary in the rear flow or return water connections.*

1. Connect the system flow and return pipework to the boiler as appropriate. Refer to Frames 12 and 13 for guidance on system design.
2. Ensure that all valves are open. Fill and vent the system and check for water soundness.

12 MINIMUM REQUIREMENTS Fully pumped systems

1. Open vent and cold feed connections must be made to the boiler flow and return tappings according to the options shown in Frame 1.
2. The boiler is assumed to be the highest point of the circulating system.
3. The circulating pump is positioned on the FLOW and the vertical distance, between the pump and feed/ expansion tank, must comply with the pump manufacturer's minimum requirements, to avoid cavitation. Should these conditions not apply, either lower the pump position or raise the feed/expansion tank above the minimum requirements of **Caradon Plumbing Limited.**
4. The water velocity through the boiler flow/return pipes is assumed to be below 1 m/s (3 ft./s), whilst the pump flow rate is set to provide a temperature difference of 11 °C (20°F) across the boiler flow/return, at design input.
5. This information is intended as a GUIDE ONLY and cannot take into account instantaneous changes in heat caused by the operation of motorised valves, pumps etc.

   Due allowance MUST be made if surging is liable to occur. If in any doubt, contact **Caradon Plumbing Limited.**

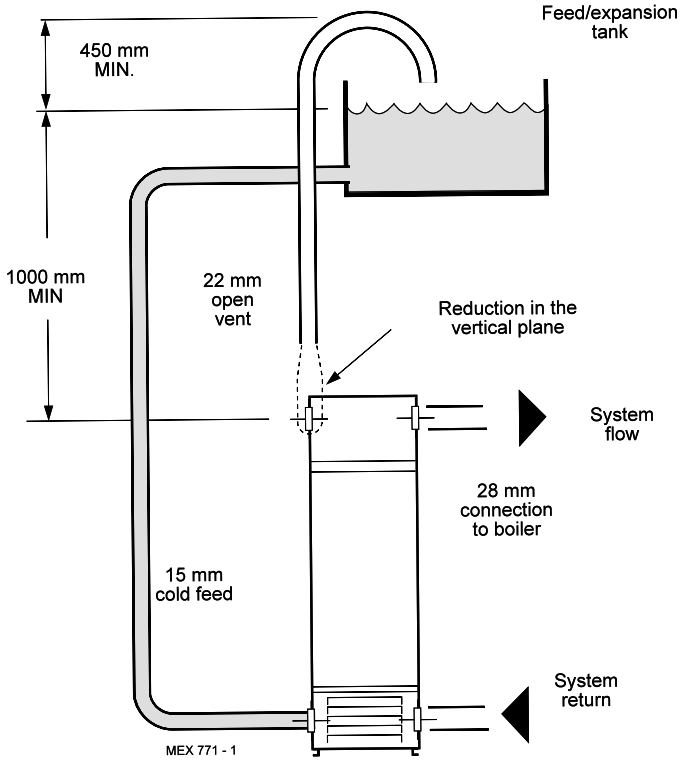

13 GRAVITY HOT WATER & PUMPED CENTRAL HEATING

1. Separate flow and return connections are used for each service. All possible configurations are given in Frame 1 but *ONLY those shown should be used.*

2. The use of a cylinder thermostat is recommended. This will prevent excessive DHW temperatures and thus reduce gas consumption.

3. The schematic pipework graph is based on the assumption that NO MORE than 8 elbows are used in the gravity loop, including entry to the boiler.

4. For each extra elbow in excess of 8, (R) MUST be reduced by 300 mm (12") or (H) increased by 100 mm (4")

5. Whatever value is selected for (R) the value of (H) MUST be at least that indicated by the graph.

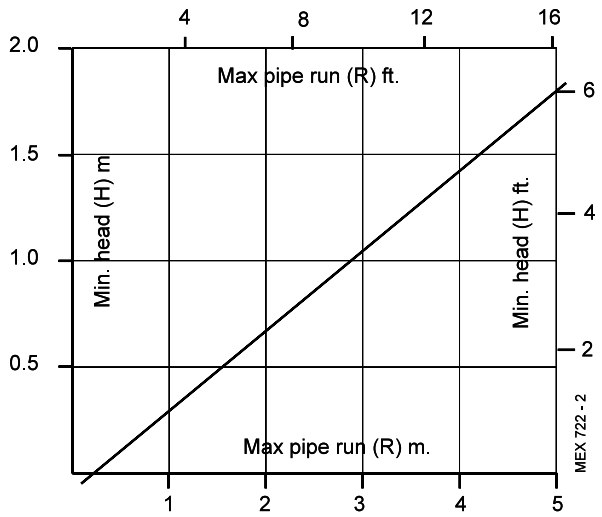

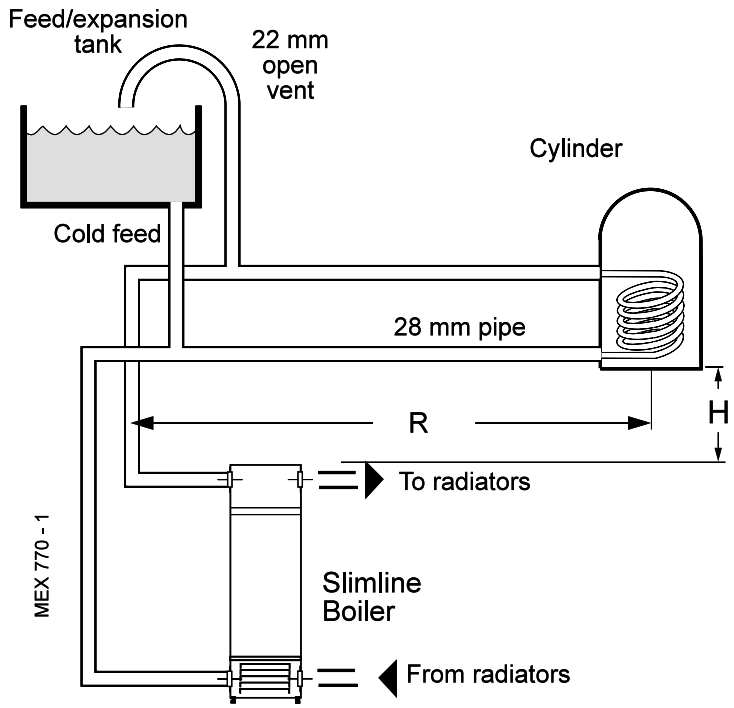

R = the horizontal distance between the centre line of the cylinder and the boiler tappings used (measured along the pipe run).

H = the vertical distance between the top of the boiler and the base of the cylinder.

Notes.

a. *Flow and return pipes should rise vertically on leaving the boiler.*

b. *Horizontal pipes should be ABOVE ceiling level and as short as possible.*

c. *A MINIMUM inclination of 25 mm per 3 m run (1" per 10') is required to avoid air locks.*

If the above conditions cannot be met pumped primaries should be used.

14 ELECTRICAL CONNECTIONS

WARNING.

The appliance MUST be efficiently earthed.

A mains supply of 230 V ~ 50 Hz is required.

The fuse rating should be 3A.

All external controls and wiring MUST be suitable for mains voltage.

Wiring should be in 3-core PVC insulated cable NOT LESS than 0.75 mm^2 (24 x 0.2 mm) to BS.6500, Table 16.

Wiring external to the boiler MUST be in accordance with current I.E.E. (BS 7671) Wiring Regulations and local regulations.

Connection must be made in a way that allows complete isolation of the electrical supply - such as a double pole switch, having a 3mm (1/8") contact separation in both poles, or a plug and socket serving only the boiler and system controls. The means of isolation must be accessible to the user after installation.

15 INTERNAL WIRING

Flow and pictorial wiring diagrams are shown in Frames 16 and 17.

1. Remove the securing screw and lift off the control box cover.

2. Route the electrical leads into the box and wire into the terminal strip, as shown.

Notes.

a. *Secure each lead with one of the cable clamps.*

b. *The mains lead connection MUST be made so that, should the lead slip from its anchorage, the current conductors become taut before the earthing conductor.*

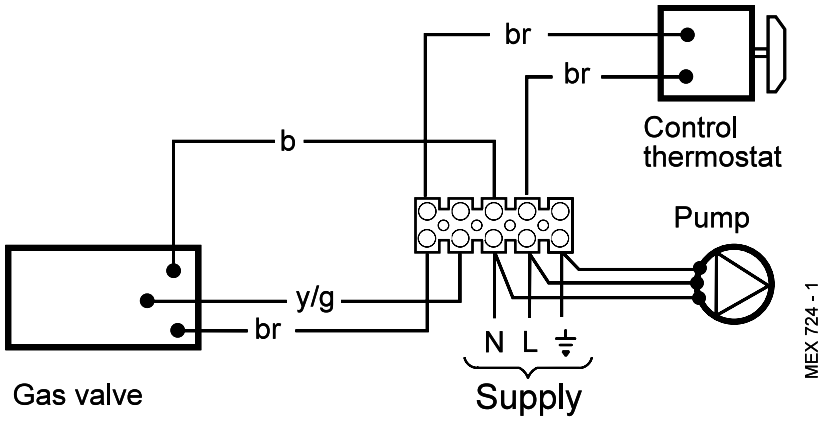

LEGEND

b blue **br** brown **y/g** yellow/green

16 EXTERNAL CONTROLS

External wiring must be in accordance with the current I.E.E. (BS.7671) Wiring Regulations.

The wiring diagrams illustrated in Frames 18-20 cover the systems most likely to be fitted to this appliance.

For wiring external controls to the **Mexico Slimline 3 RS** boiler reference should be made to the system wiring diagrams supplied by the relevant manufacturer, in conjunction with the flow wiring diagram below and also Frame 15.

Difficulty in wiring should not arise, providing the following directions are observed:

1. Controls that switch the system ON and OFF, e.g. a time switch, MUST be wired, in series, in the live mains lead to the boiler.
2. Controls that override an ON/OFF control, e.g. a frost thermostat, MUST be wired into the mains lead, in parallel, with the control(s) to be overridden. Refer to Frame 21.
3. Controls that switch the circulating pump *only* on and off (e.g. a room thermostat) MUST be wired in series, with the pump in the live pump lead.
4. If a proprietary system is used, follow the instructions supplied by the manufacturer.

Advice on required modifications to the wiring may be obtained from the component manufacturers.

Note. *If there are no external controls the circulating pump MUST be wired into the control box.*

Flow wiring diagram

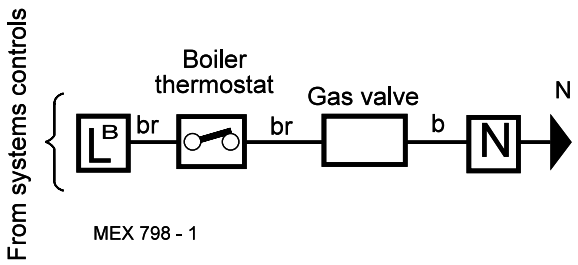

LEGEND **b** blue **br** brown

17 PICTORIAL WIRING

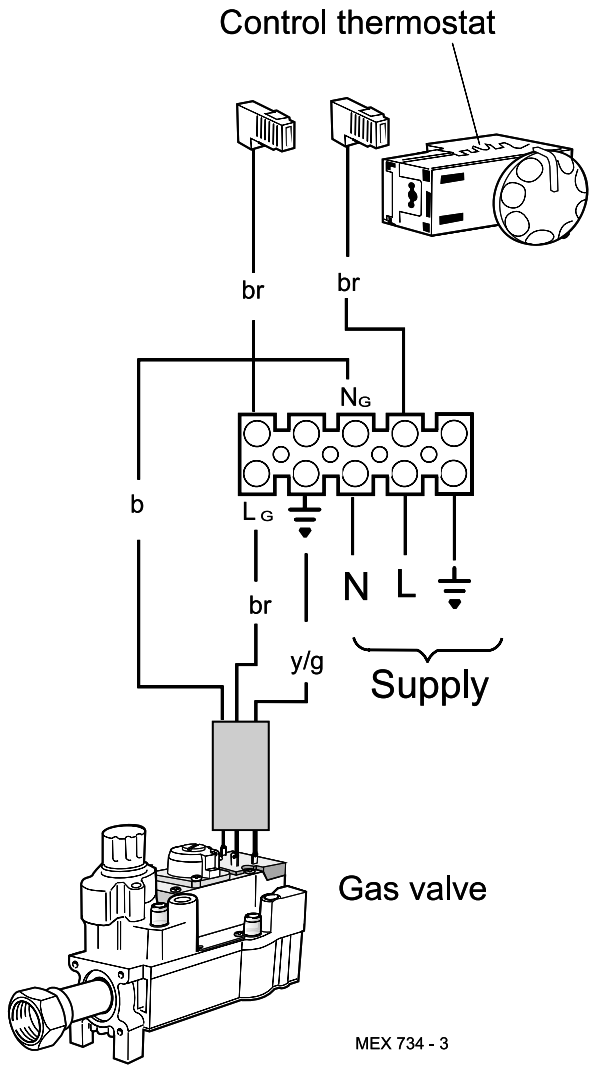

LEGEND

b blue **br** brown **y/g** yellow/green

18 FULLY PUMPED - Y PLAN

Notes.

1. *Some earth wires are omitted for clarity. Ensure proper earth continuity when wiring.*
2. *Numbering of terminals on thermostats is specific to the manufacturer indicated.*
3. *This is a fully controlled system - set the boiler thermostat to maximum.*
4. *'Switchmaster Midi' is similar in operation but the wiring differs slightly; see manufacturer's literature.*

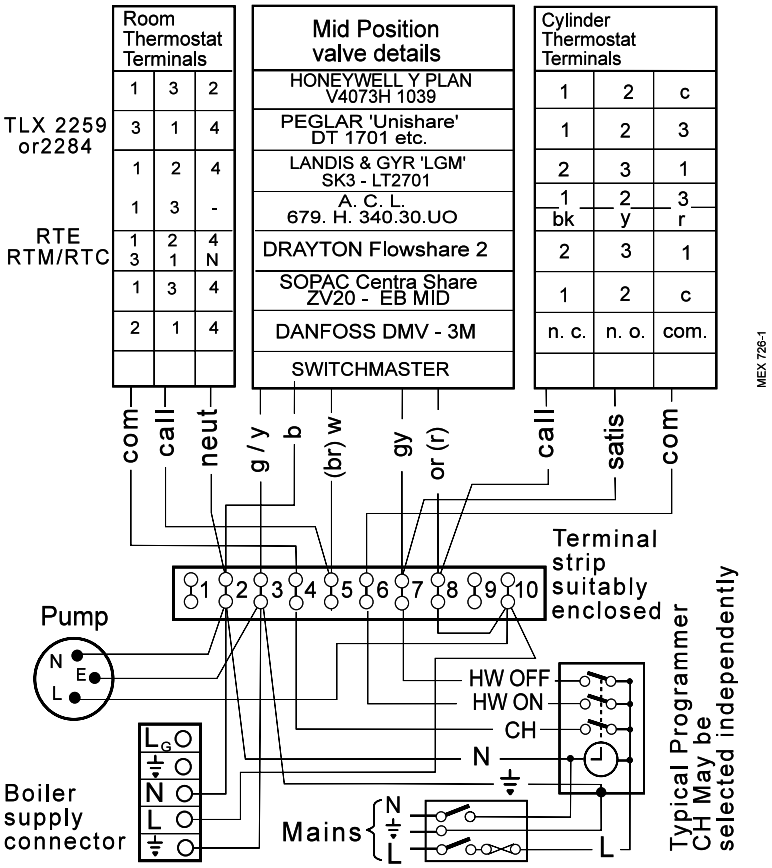

LEGEND

b	blue	**or**	orange
bk	black	**w**	white
br	brown	**gy**	grey
r	red	**y/g**	yellow/green

19 FULLY PUMPED - S PLAN

Notes.

1. *Some earth wires are omitted for clarity. Ensure proper earth continuity when wiring.*
2. *Numbering of terminals on thermostats is specific to the manufacturer.*
3. *This is a fully controlled system - set the boiler thermostat to maximum.*
4. *'Switchmaster Autozone' has grey and orange auxiliary switch leads but the GREY (NOT the orange) wire must be connected to the incoming live supply.*

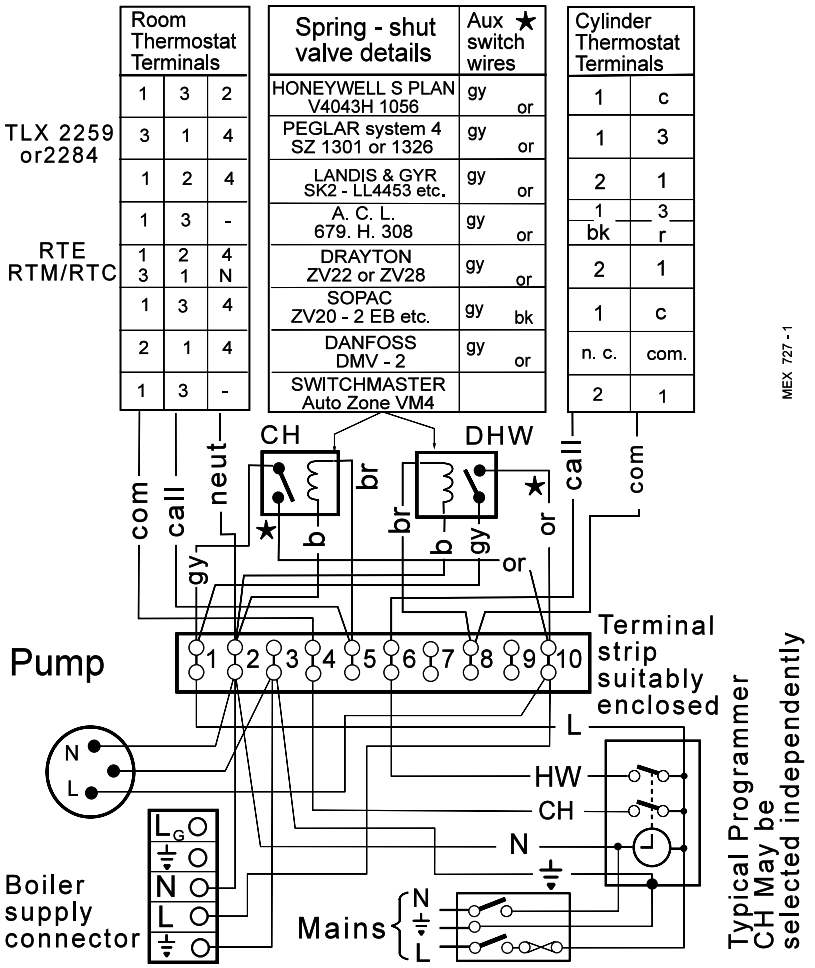

LEGEND

b	blue	**w**	white
bk	black	**or**	orange
br	brown	**y/g**	yellow/green
r	red	**gy**	grey

20 HONEYWELL 'C' PLAN

Gravity HW & Pumped CH

Notes.

1. *Some earth wires are omitted for clarity. Ensure proper earth continuity when wiring*
2. *Numbering of terminals on thermostats is specific to the manufacturer.*

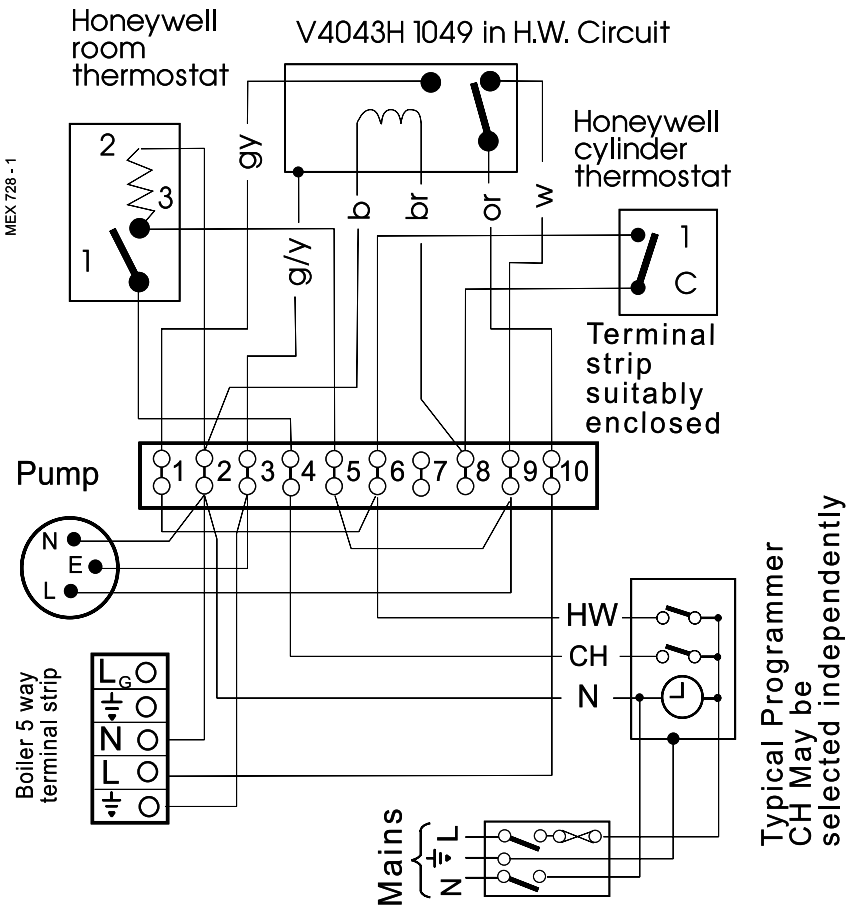

LEGEND

w	white	**or**	orange
r	red	**b**	blue
bk	black	**gy**	grey
br	brown	**g/y**	green/yellow

21 FROST PROTECTION

Central heating systems fitted wholly inside the house do not normally require frost protection as the house acts as a 'storage heater' and can normally be left at least 24 hrs. without frost damage. However, if parts of the pipework run outside the house or if the boiler will be left off for more than a day or so then a frost 'stat should be wired into the system.

This is usually done at the programmer, in which case the programme selector switches are set to OFF and all other controls MUST be left in the running position.

The frost 'stat should be sited in a cold place but where it can sense heat from the system.

Wiring should be as shown, with minimal disturbance to other wiring of the programmer.

Designation of the terminals will vary, but the programmer and thermostat manufacturer's leaflets will give full details.

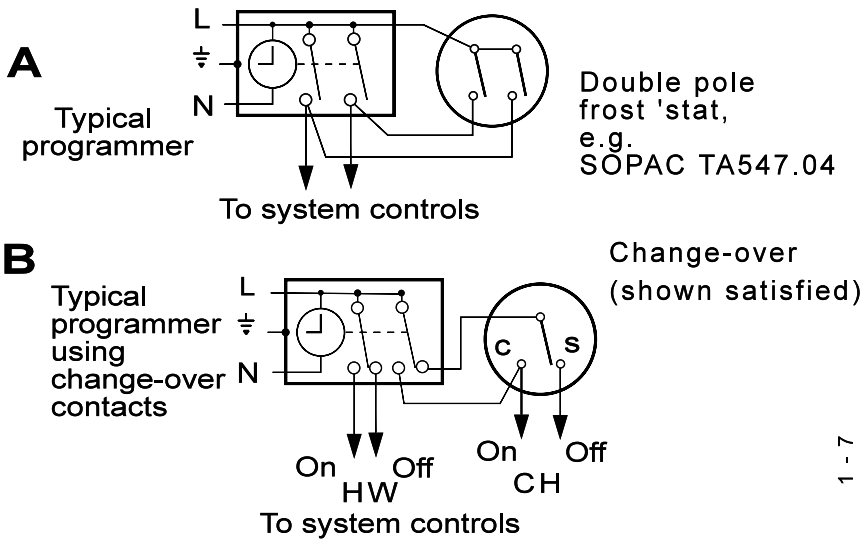

Diagram A shows a double pole frost thermostat, which should suffice for all systems which do not use the OFF terminals of the programmer.

Diagram B shows a 'change-over' frost thermostat, which will cover most systems which do use CH OFF. If, however, on such a system the HW pipework is in an isolated part of the house, a second frost thermostat may be used to protect it.

If in doubt, ask your installer for advice.

22 FITTING THE CASING

1. Offer up the LH side panel and secure the panel to the baseplate and heat exchanger.
2. Repeat step 1 to refit the RH side panel.
3. Place the top panel on top of the side panels.
4. Secure the top panel to the side panels with the screws at the front.

IMPORTANT.

Wiring within the boiler casing must be neatly secured with the cable straps provided and MUST NOT be allowed to touch the burner front plate, or the cleanout cover and the collector hood.

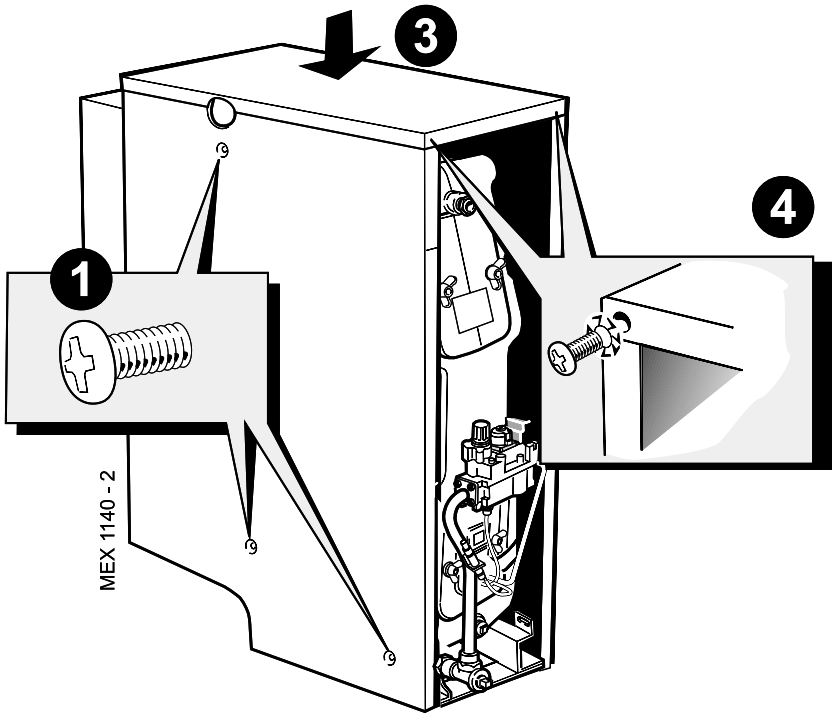

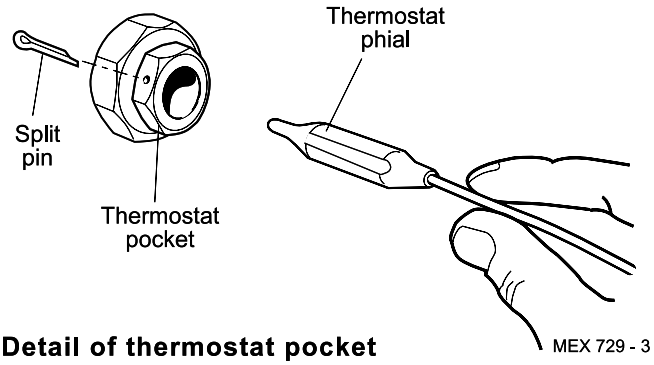

Detail of thermostat pocket

5. Insert the thermostat phial into the thermostat pocket. Take care not to kink the thermostat capillary as it is unwound, and secure it with the split pin as shown.
6. Replace the control box cover and refit the control panel, using the screws previously removed.
7. Refit the grille assembly.

23 COMMISSIONING AND TESTING

A. ELECTRICAL INSTALLATION

1. Checks to ensure electrical safety should be carried out by a competent person.
2. ALWAYS carry out preliminary electrical system checks, i.e. earth continuity, polarity, resistance to earth and short circuit using a suitable test meter.

B. GAS INSTALLATION

1. The whole of the gas installation, including the meter, MUST be inspected and tested for soundness, and purged in accordance with the recommendations of BS. 6891.
2. Purging air from the gas installation may be expedited by loosening the union on the gas service cock on the boiler and purging until gas is detected.
3. Retighten the union and check for gas soundness.

C. WATER CIRCULATING SYSTEM

1. The whole of the system should be thoroughly flushed out with cold water WITHOUT the pump in position. Ensure that all valves are open.
2. With the pump fitted the system should be filled and air locks cleared. Check for water soundness.

WARNING. Whilst effecting the required gas soundness test and purging air from the gas installation, open all windows and doors, extinguish naked lights and **DO NOT SMOKE.**

24 INITIAL LIGHTING

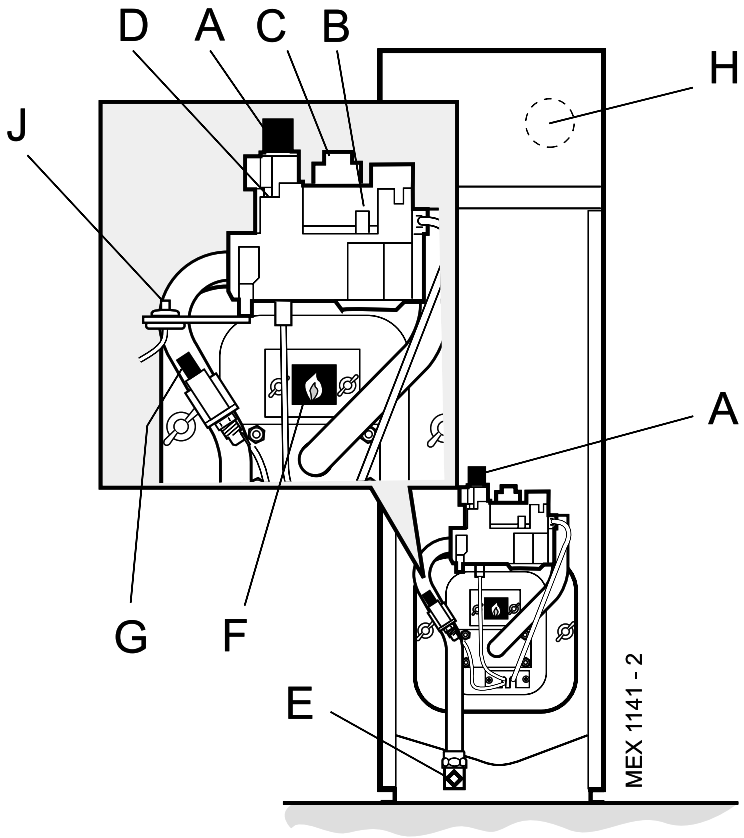

LEGEND

- **A** Gas control knob
- **B** Burner pressure test point
- **C** Main burner pressure adjuster
- **D** Inlet pressure test point
- **E** Gas service cock
- **F** Sightglass
- **G** Piezo unit ignition
- **H** Boiler thermostat knob
- **J** Overheat thermostat reset button (optional)

1. Connect the gas valve electrical leads and refit the cover.

2. Check that the gas service cock (E) is ON and that the boiler thermostat control knob (H) is OFF.

3. Loosen the screw in the burner pressure test point (B) and connect a gas pressure gauge via a flexible tube.

4. Turn the gas control knob (A) CLOCKWISE until resistance is felt and then release it.

Wait for 3 minutes

5. Push in and retain fully depressed the gas control knob (A). Press and release the piezo unit button (G) repeatedly until the pilot is seen to light through the sightglass (F).

6. Hold the gas control knob (A) depressed for 15 seconds after the pilot burner has ignited, then release.

If the pilot burner fails to remain alight at this stage, repeat the procedure detailed above but wait longer than 15 seconds before releasing the gas control knob (A).

7. Check the appearance of the pilot flame to ensure that it envelops the tip of the thermocouple and is approximately 25mm (1") long.
The pilot flame is factory set and no adjustment is possible.

8. Switch the boiler thermostat control knob (H) to position 6 and check that the burner cross-lights smoothly from the pilot flame.

9. Test for gas soundness around the boiler gas component joints, using leak detection fluid.

10. Operate the boiler for 10 minutes to stabilise the burner temperature. The boiler is preset at the factory to its maximum nominal rating but can be range-rated to suit the system design requirements. Refer to Table 2, page 3.

If the burner setting pressure requires adjustment, remove the silver threaded protection cap on the top of the regulator. Adjust the main burner pressure adjuster (C) until the required main burner pressure is achieved.

Note. *Continual adjustment in either direction will produce the opposite effect.*

11. If the boiler output is set to MID or MINIMUM affix the appropriate indicator label, supplied, to the data plate (front of baseplate).

12. Turn the boiler thermostat knob (H) to OFF.

13. Remove the pressure gauge and tube. Retighten the screw in the pressure test point, ensuring that a gas-tight seal is made.

25 GENERAL CHECKS

Make the following checks for correct operation:

1. Turn the boiler thermostat OFF and ON to check that the main burner is extinguished and relit in response.
2. Check that the programmer, if fitted, and all other system controls function correctly.

   Operate each control separately and check that the main burner or circulating pump (as the case may be) responds.
3. **Flame failure device**

   The flame failure device must cut off the gas to the burner within 60 seconds. Check the operation of the flame failure device in the gas control valve as follows:

   a. With the burner alight, turn the gas control knob clockwise until resistance is felt and then release it. The burner and pilot flame should shut down immediately.

   Note. *A latch in the gas control valve provides a safety delay period of approximately 30 seconds before the pilot can be relit.*

   b. The correct operation of external system controls should be proved. Turn each, in turn, to OFF and ON and check that the main burner or circulating pump responds.
4. **Water Circulation System**

   a. With the system HOT, examine all water connections for soundness.

   b. With the system still hot, turn off the gas, water and electricity supplies to the boiler and drain down, in order to complete the flushing process.

   c. Refill and vent the system, clear all air locks and again check for water soundness.

   d. Balance the system.
5. Finally, set the controls to the user's requirements and refit the lower panel and close the controls door.

Notes.

a. *If an optional programmer kit is fitted refer to the separate Programmer Kit Installation Instructions and User's Instructions.*

b. *The temperatures quoted below are approximate and vary between installations.*

Thermostat Knob Setting	Flow Temperature °C	°F
1	54	130
2	60	140
3	66	150
4	71	160
5	77	170
6	82	180

26 HANDING OVER

After completing the installation and commissioning of the system the installer should hand over to the householder by the following actions:

1. Hand the User's Instructions to the householder and explain his or her responsibilities under the Gas Safety (Installation and Use) Regulations 1994, amendments 1996 or rules in force.
2. Draw attention to the lighting instruction label affixed to the inside of the controls door.
3. Explain and demonstrate the lighting and shutting down procedures.
4. The operation of the boiler and the use and adjustment of ALL system controls should be fully explained to the householder, to ensure the greatest possible fuel economy consistent with household requirements of both heating and hot water consumption.

   Advise the User of the precautions necessary to prevent damage to the system and to the building, in the event of the system remaining inoperative during frosty conditions.
5. Explain the function and the use of the boiler thermostat and external controls.
6. Explain and demonstrate the function of time and temperature controls, radiator valves etc., for the economic use of the system.
7. If an optional Programmer Kit is fitted then draw attention to the Programmer Kit User's Instructions and hand them to the householder.
8. **After installation, commissioning and customer hand-over instructions please complete the benchmark appliance log book and leave this with the customer.**
9. Stress the importance of regular servicing by a CORGI registered installer and that a comprehensive service should be carried out AT LEAST ONCE A YEAR.

27 SCHEDULE

To ensure the continued safe and efficient operation of the appliance, it is recommended that it is checked at regular intervals and serviced as necessary. The frequency of servicing will depend upon the installation condition and usage but should be carried out at least annually .

It is the law that any service work must be carried out by a CORGI registered installer.

a. Light the boiler and carry out a pre-service check, noting any operational faults.

b. Clean the main burner.

c. Clean the heat exchanger.

d. Clean the main injectors.

e. Check the condition of the thermocouple.

f. Check that the flue terminal is unobstructed and that the flue system, including the flue cleanout cover, is sealed correctly.

g. If the appliance has been installed in a compartment, check that the ventilation areas are clear.

The servicing procedures are covered more fully in Frames 28 to 33 and MUST be carried out in sequence.

WARNING. Always turn OFF the gas supply at the gas service cock and switch OFF and DISCONNECT the electrical supply to the appliance *BEFORE SERVICING.*

IMPORTANT. After completing the servicing or exchange of components always test for gas soundness and carry out functional checks as appropriate.

28 BOILER CASING REMOVAL

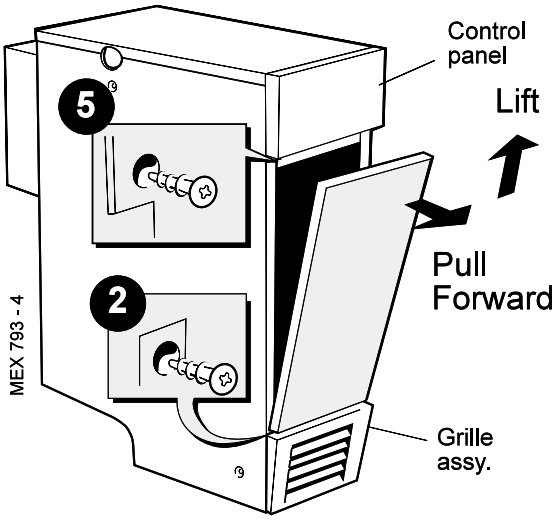

1. Lift off the lower front panel.

2. Remove the 2 screws and lift off the grille assembly.

3. Remove the gas valve electrical cover and disconnect the electrical leads.

4. Release the gas valve lead from the retaining clip.

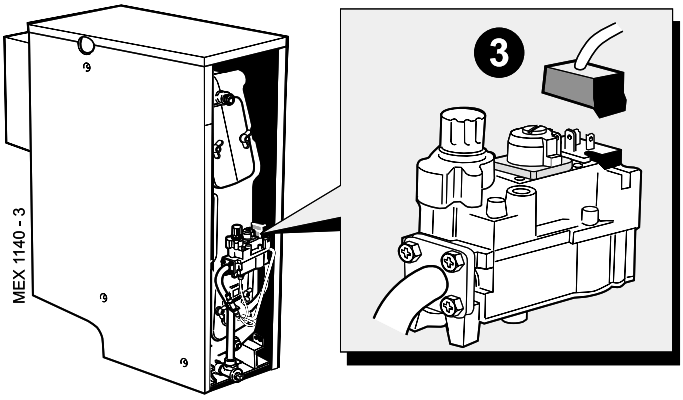

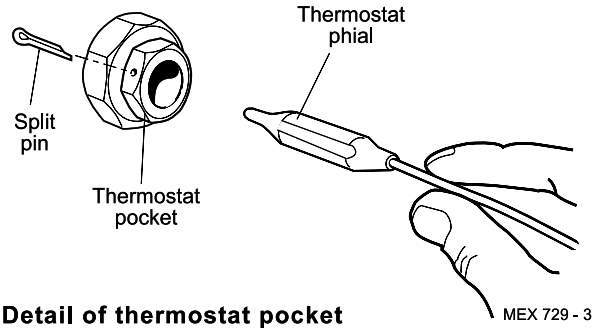

Detail of thermostat pocket

5. Remove the 2 screws securing the control panel and pull down to release the tabs from under the top panel.

6. Remove the thermostat phial from the pocket as shown.

7. If the boiler is not fitted under a work top, access for flue cleaning will be improved by removing the top panel.

29 BURNER AND CONTROLS ASSEMBLY

1. Lift off lower front panel (refer to Frame 28) and remove the grille assembly. Undo the gas cock union.
2. Remove the wing nuts and washers, securing the burner front plate and remove the burner/controls assembly from the boiler.
3. When replacing a defective main burner bar it is most important that the baffles are fitted to the new burner.

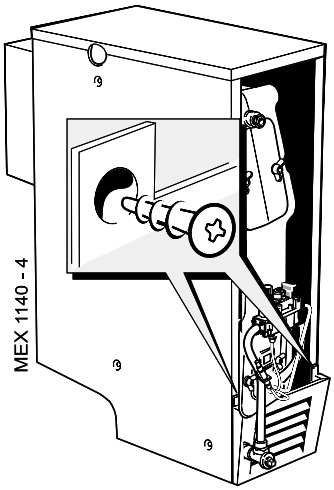

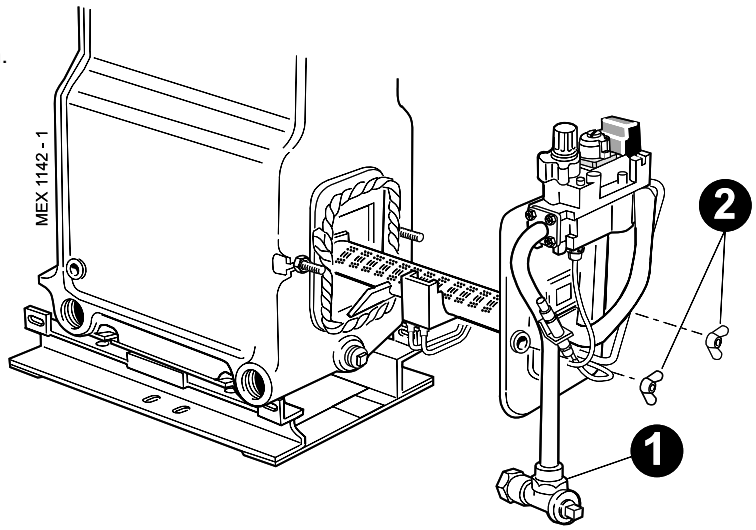

30 CLEANING THE BURNER ASSEMBLY

1. Brush off any deposits that may have fallen onto the burner head, ensuring that the flame ports are unobstructed, and remove any debris that may have collected.

   Note. *Brushes with metallic bristles MUST NOT be used.*
2. Remove the main burner injector. Check, clean or replace, as required.
3. Refit the injector, using an approved jointing compound.
4. Inspect the pilot burner, thermocouple and ignition electrode; ensure they are clear and in good condition.

   Check that:

   a. The pilot burner is clean and unobstructed.

   b. The pilot shield is clean and unobstructed.

   c. The ignition electrode is clean and undamaged.

   d. The ignition lead is in good condition and securely connected.

   d. The spark gap is correct. Refer to Frame 37.

   e. The thermocouple tip is not burned or cracked.

   f. The position of the thermocouple relative to the pilot burner is correct. Refer to Frame 37.

   g. The thermocouple terminal at the gas valve is clean and secure.

   h. The sightglass is clean and undamaged.
5. Clean or renew components as necessary.

31 CLEANING THE FLUEWAYS

1. Lift off lower front panel and remove the grille assembly. Refer to Frames 28 & 29. Undo the gas cock union. Remove the burner assembly.
2. Undo the 2 wing nuts to remove the cleanout cover.
3. Lift out the flue baffle. (RS3/40 only)
4. Remove all loose deposits from the heat exchanger, especially from between the fins, using a suitable brush.
   Remove all debris from the combustion chamber base
5. Check that the flue outlet duct is unobstructed.

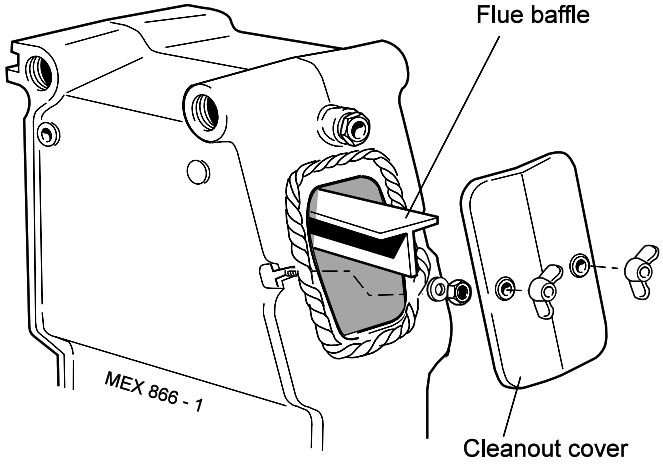

32 RE-ASSEMBLY

Re-assemble the boiler in the following order :

1. **RS 3/40 only.** Refit the flue baffle into the boiler flueway, ensuring that they are correctly repositioned. Refer to Frame 8.
2. Refit the flue cleanout cover, renewing any damaged or deteriorating sealing gasket.
3. Refit the casing top panel.
4. Reconnect the electrical wiring and refit the controls panel, ensuring that the thermostat phial and phial retaining clip are correctly located in the thermostat pocket and secured by the split pin. Refer to Frame 28.
5. Check the sightglass in the front plate - clean or renew as necessary.
6. Renew any damaged or deteriorating front plate gasket.
7. Refit the burner and controls assembly.
8. Reconnect the gas service cock.
9. Refit the grille assembly.

33 GAS PRESSURE ADJUSTMENT

1. Pilot pressure.
   Pilot adjustment is factory set to maximum and no adjustment is possible,
2. Main burner pressure.
   After servicing, reference should be made to Table 2, which quotes details of the rated output with the related burner pressure and heat input.

Any required adjustments should be made using the pressure adjustment screw. Refer to Frame 24, 'Initial Lighting'.

Refit the grille assembly and lower front panel in reverse order (see Frame 28)

REPLACEMENT OF PARTS

34 GENERAL

When replacing any component:

1. Isolate the electricity supply.
2. Turn off the gas supply at the boiler.
3. Remove the lower front panel.

For replacement of programmer units refer to the separate Programmer Kit Instructions.

35 SIGHTGLASS REPLACEMENT

1. Unfasten the 2 wing nuts and washers. Remove the assembly from the front plate.
2. Fit the new sightglass and re-assemble in the correct order (i.e. gasket, glass, gasket and frame), as shown.
3. Retighten the 2 wing nuts to ensure an airtight seal. *Do NOT overtighten.*

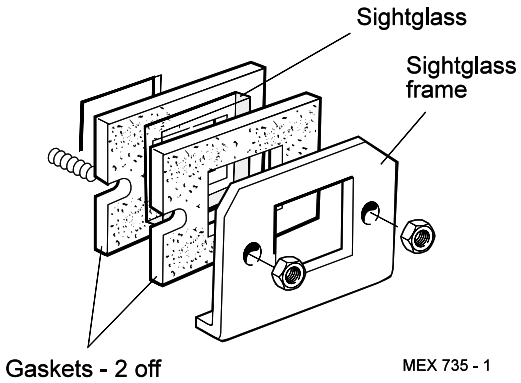

36 PIEZO UNIT REPLACEMENT

1. Disconnect the ignition lead from the piezo unit body.
2. Remove the retaining nut securing the body to the bracket and withdraw the unit, as shown.
3. Fit the new unit and reassemble in reverse order.

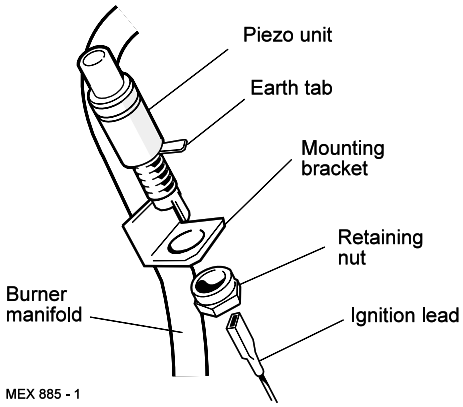

37 PILOT BURNER REPLACEMENT

1. Lift off lower front panel and remove the grille assembly - refer to Frames 28 & 29. Undo the gas cock union. Remove the burner assembly.
2. Remove the ignition electrode. Refer to Frame 42.
3. Unscrew the thermocouple nut and pull the thermocouple clear.
4. Undo the pilot supply pipe nut and ease clear of the pilot burner. DO NOT lose the pilot injector, which is a push-fit in the pilot burner housing.
5. Remove the 2 securing screws and washers, and withdraw the pilot burner.
6. Fit the new pilot burner and re-assemble in reverse order, ensuring that:
   - **a.** The injector is in position when refitting the pilot supply.
   - **b.** A gas-tight joint is made.
   - **c.** The spark gap is correct.
7. Refit the thermocouple and electrode, reassembling in reverse order.

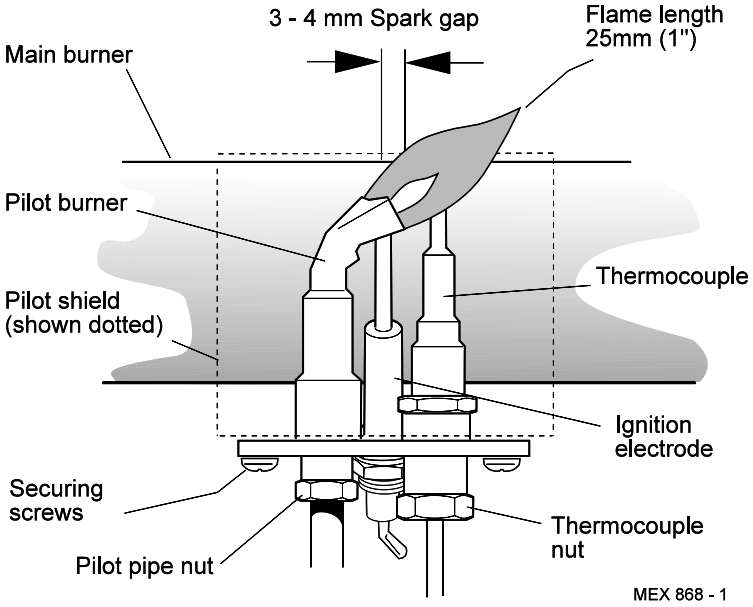

38 BOILER THERMOSTAT REPLACEMENT

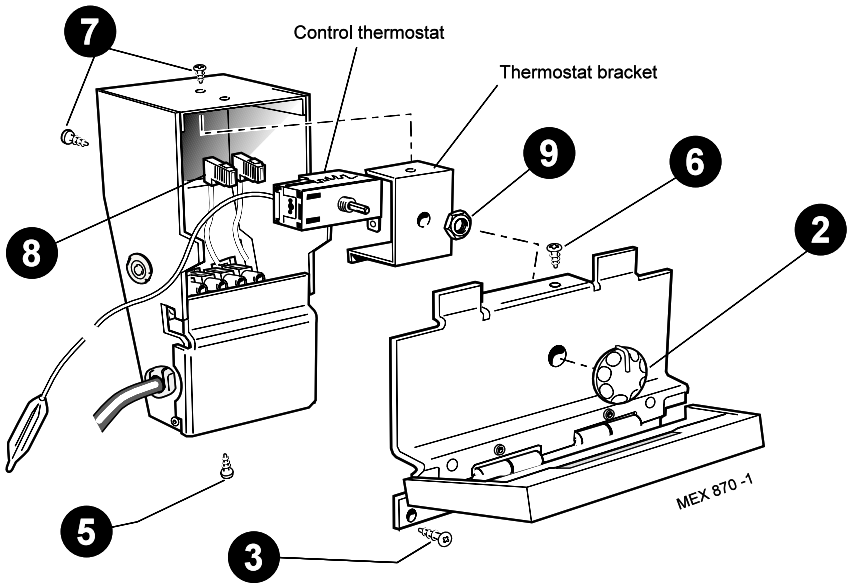

1. Lift off the front door. Refer to Frames 28 & 29.
2. Pull off the thermostat knob.
3. Remove the 2 screws and pull down the control panel tabs clear of the top panel.
4. Remove the thermostat phial from the pocket. Refer to Frame 28.
5. Remove the bottom screw and remove the cover.
6. Remove the top screw and ease the control box off the control panel.
7. Remove the 2 screws to release the thermostat bracket.
8. Disconnect the electrical leads.
9. Unscrew the thermostat nut to withdraw the thermostat.
10. Fit the new thermostat and re-assemble in reverse order.

39 CONTROLS PANEL REPLACEMENT

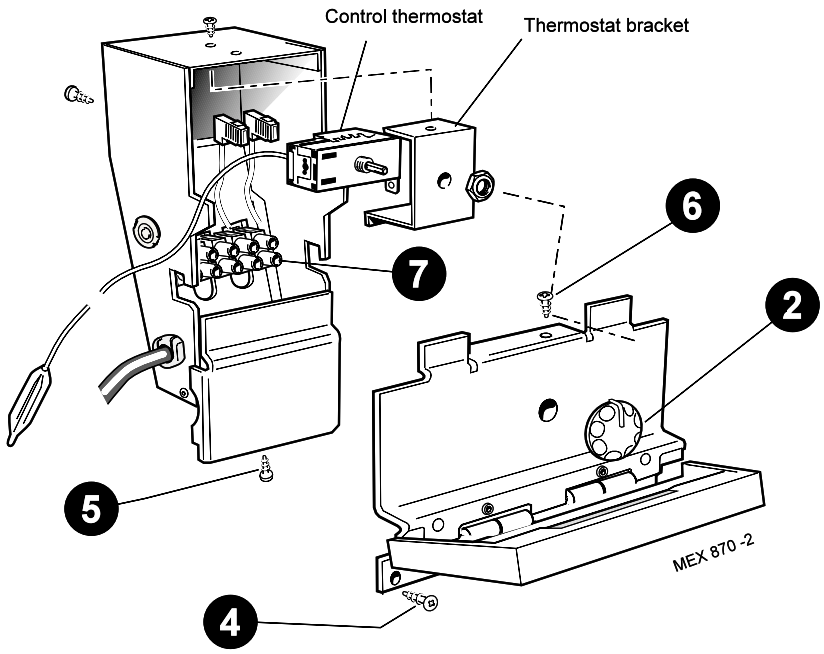

1. Lift off the lower front panel. Refer Frames 28 & 29.
2. Pull off the thermostat knob.
3. Disconnect the electrical connections from the gas valve.
4. Unscrew the 2 screws and pull down the control panel so that the 2 tabs clear the top panel.
5. Remove the bottom screw and remove the cover from the control box.
6. Remove the top screw and ease the control box off the control panel.
7. Disconnect the mains electrical supply from the terminal strip and release from its clamp.
8. Remove the thermostat phial from the pocket and remove with the new one. Refer to Frame 28.
9. Assemble new control box and panel and fit to the casing reverse order.
10. Insert control thermostat phial into pocket and secure with the split pin.
11. Connect gas valve electrical leads.
12. Remove control box cover and make electrical supply connections to the terminal strip. Refer to frame 17.
13. Replace front lower panel.

40 OVERHEAT THERMOSTAT REPLACEMENT

1. Lift off the lower front panel. Refer to Frame 28.
2. Remove the 2 screws and pull down the control panel tabs clear of the top panel.
3. Remove the split pin at the thermostat pocket and withdraw the phials from the pocket.
4. Remove the thermostat backnut.
5. Remove the 2 Eco leads.
6. Fit the new thermostat (lead polarity immaterial), ensuring that the alignment peg on the thermostat sits in the small hole adjacent to the main fixing hole, and reassemble in reverse order.

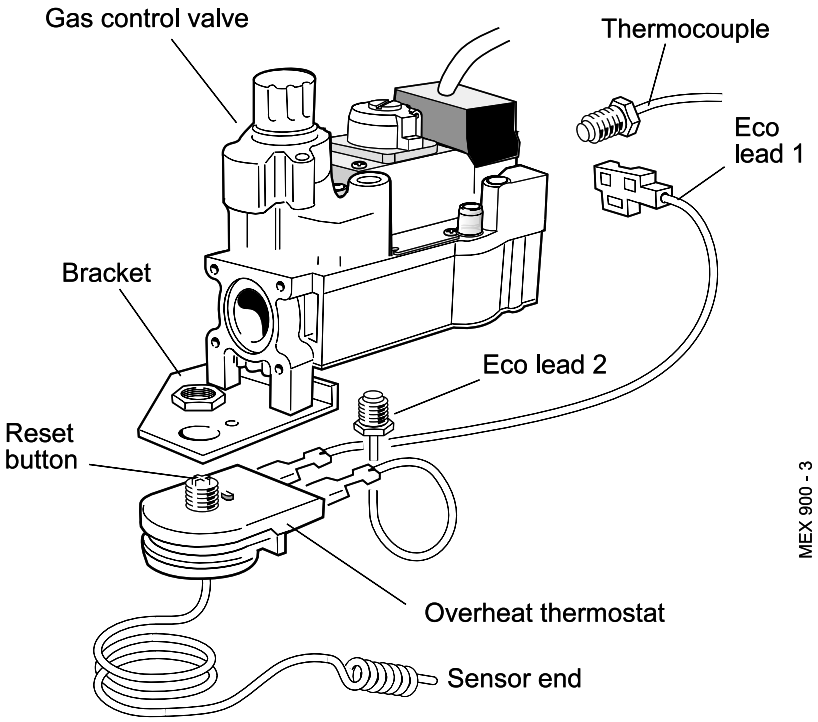

41 IGNITION LEAD REPLACEMENT

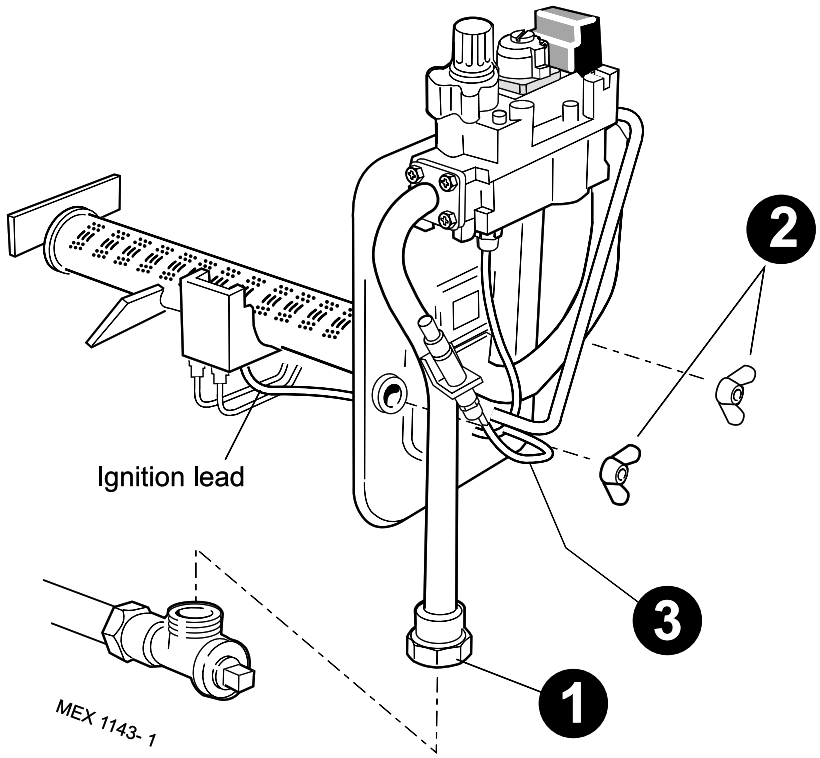

1. Lift off lower front panel and remove the grille assembly. Refer to Frames 28 & 29. Undo the gas cock union.
2. Remove the wing nuts securing the burner front plate. This plate, complete with burner assembly and gas line, can now be removed from the boiler.
3. The ignition lead can be removed by disconnecting at the piezo unit and the electrode.
4. Fit the new lead and re-assemble in reverse order.

42 IGNITION ELECTRODE REPLACEMENT

1. Lift off lower front panel and remove the grille assembly - refer to Frames 28 & 29. Undo the gas cock union. Remove the burner assembly.

2. Pull off the ignition lead at the electrode.

   The electrode is secured by a nut. Remove the nut and withdraw the electrode upward.

3. Re-assemble in reverse order.

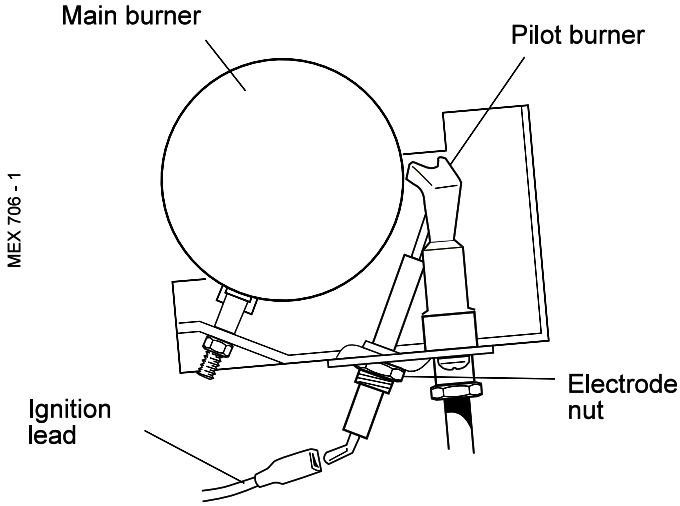

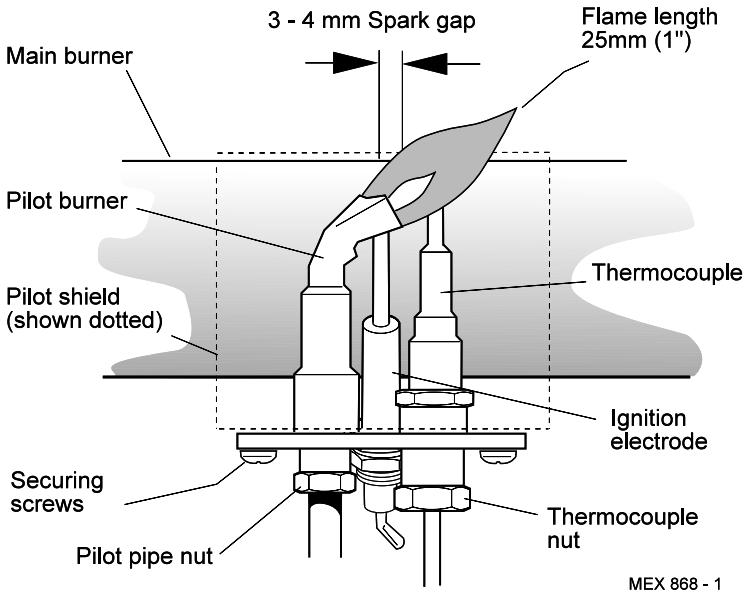

43 THERMOCOUPLE REPLACEMENT

1. Lift off lower front panel and remove the grille assembly - refer to Frames 28 & 29. Undo the gas cock union. Remove the burner assembly.

2. Undo the thermocouple nut at the pilot burner and connection at the gas valve and pull the thermocouple clear.

3. Fit the new thermocouple.

   Note. *Avoid sharp bends in the thermocouple lead and ensure that it follows the same route as previously.*

4. Re-assemble in reverse order.

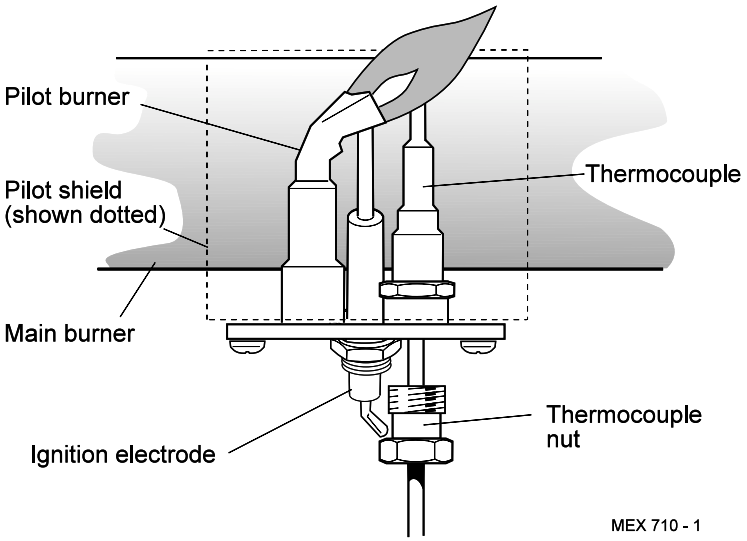

44 MAIN BURNER REPLACEMENT

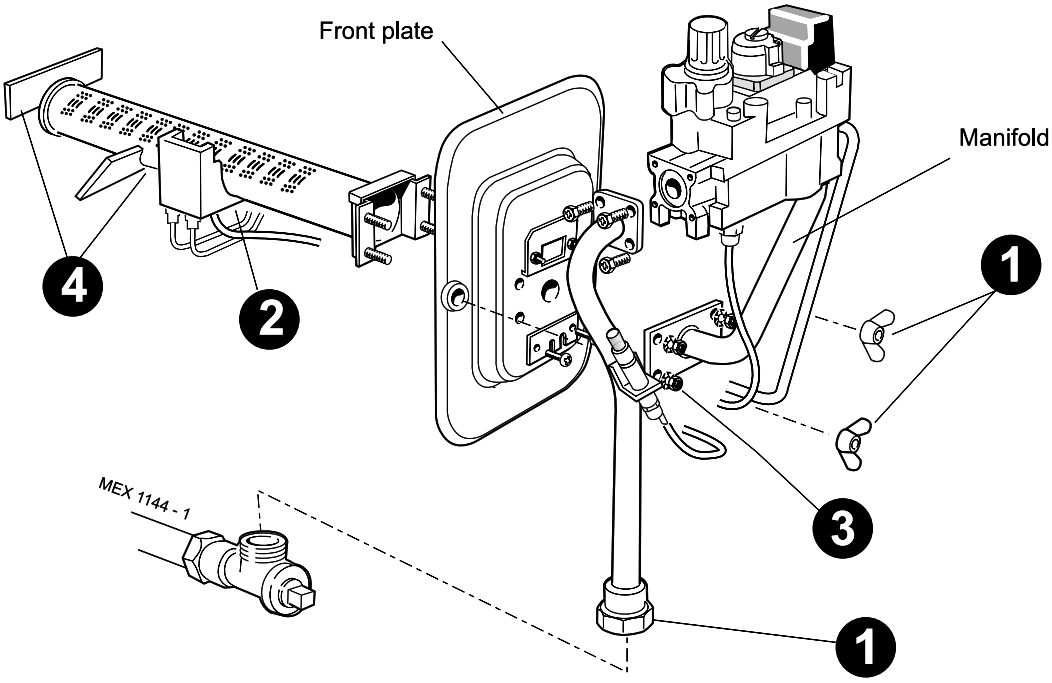

1. Lift off lower front panel and remove the grille assembly. Refer to Frames 28 & 29. Undo the gas cock union and the 2 wing nuts to remove the burner and controls assembly.
2. Undo the nut securing the pilot bracket to the main burner and remove the pilot bracket.
3. Remove the 4 nuts and washers securing the main burner to the front plate and gas manifold. Withdraw the burner.
4. Remove the nuts securing the burner baffles to the burner.
5. Fit the new burner and re-assemble in reverse order, taking care not to damage the main burner injector, which is screwed into the end of the gas manifold.

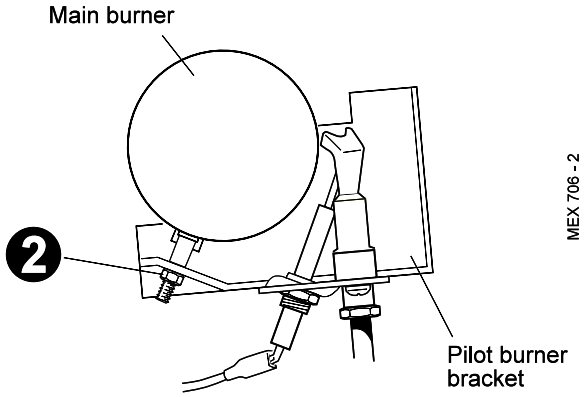

45 MAIN BURNER INJECTOR REPLACEMENT

1. Lift off lower front panel and remove the grille assembly. Refer to Frames 28 & 29. Undo the gas cock union and the 2 wing nuts to remove the burner and controls assembly.
2. Unscrew the burner injector from the manifold.
3. Fit the new injector using an approved jointing compound and re-assemble in reverse order.

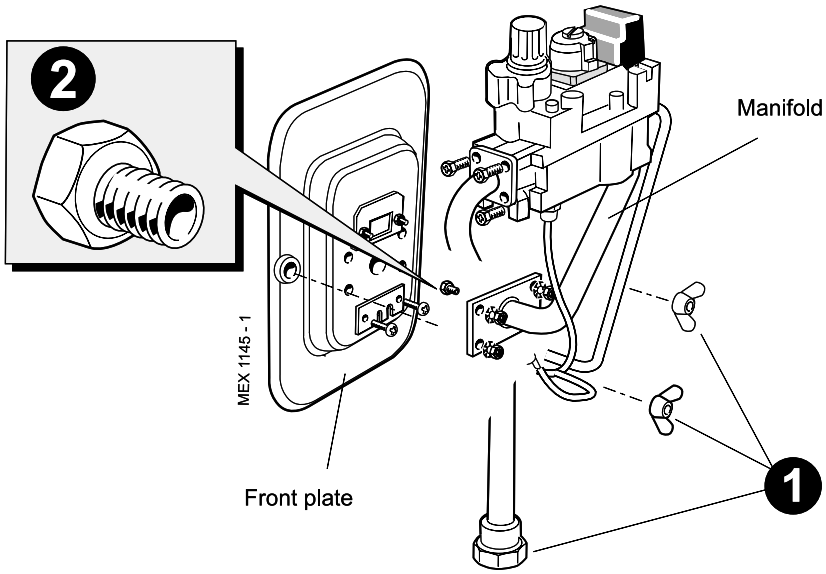

46 GAS VALVE REPLACEMENT

1. Lift off lower front panel and remove the grille assembly. Refer to Frames 28 & 29. Undo the gas cock union and the 2 wing nuts to remove the burner and controls assembly.

2. Undo the pilot pipe and thermocouple connections at the gas valve.

3. Unfasten the 4 screws securing the gas inlet pipe to the LH side of the gas valve.

4. Unfasten the 4 screws securing the gas manifold. The 2 sealing 'O' rings should be discarded and new 'O' rings fitted.

5. Fit the new gas valve, ensuring that:

   a. The valve is fitted the correct way round - an arrow engraved on the valve indicates the direction of flow.

   b. The sealing 'O' rings supplied with the valve are correctly fitted at the inlet and outlet flanges.

6. Check the complete assembly for gas soundness.

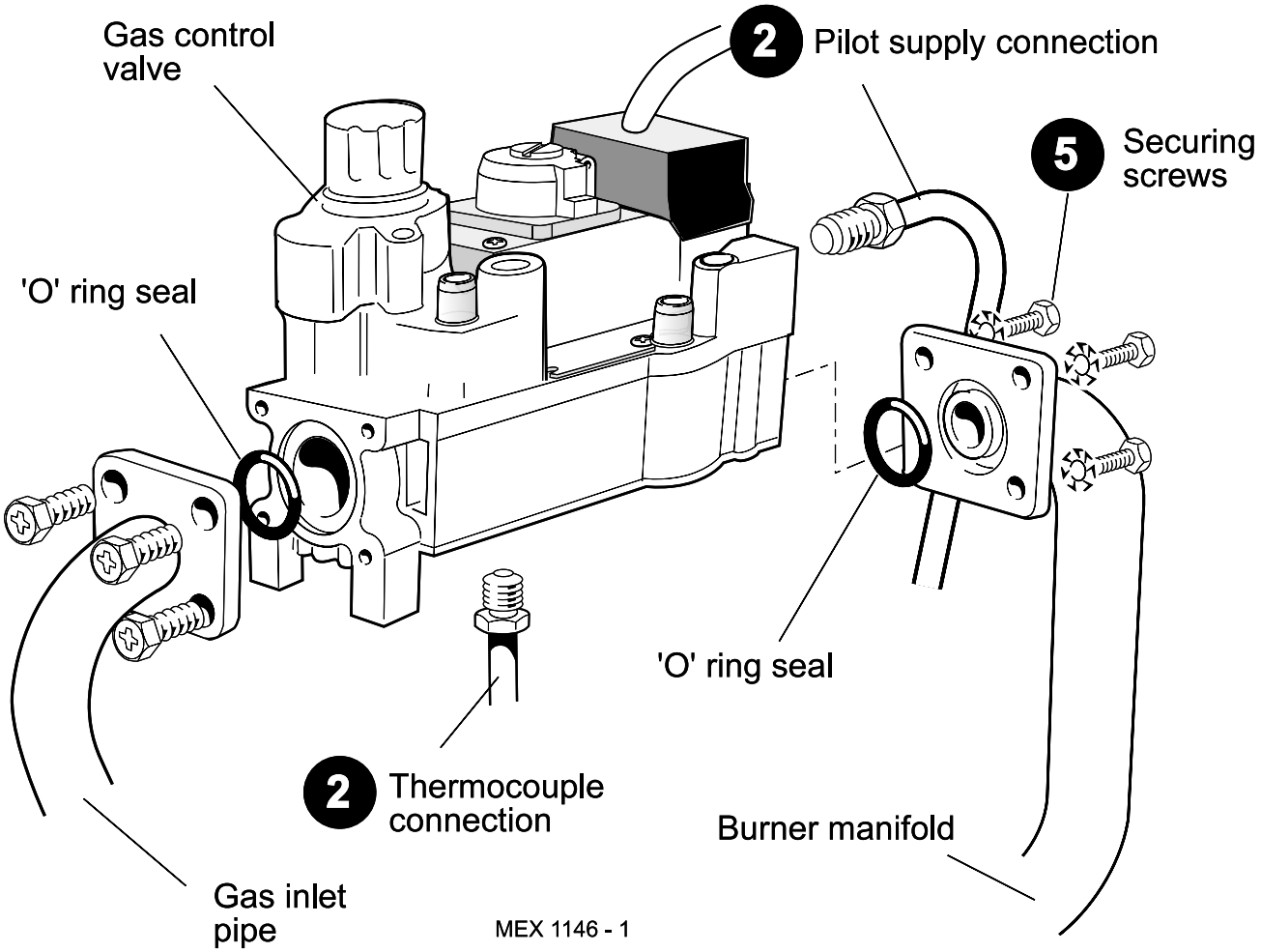

Before attempting any electrical fault finding ALWAYS carry out preliminary electrical system checks, i.e. earth continuity, polarity and resistance to earth using a suitable meter.

Detailed instructions on the cleaning and adjustment or replacement of faulty components are contained in the 'Servicing' section of this publication.

47 PILOT WILL NOT LIGHT

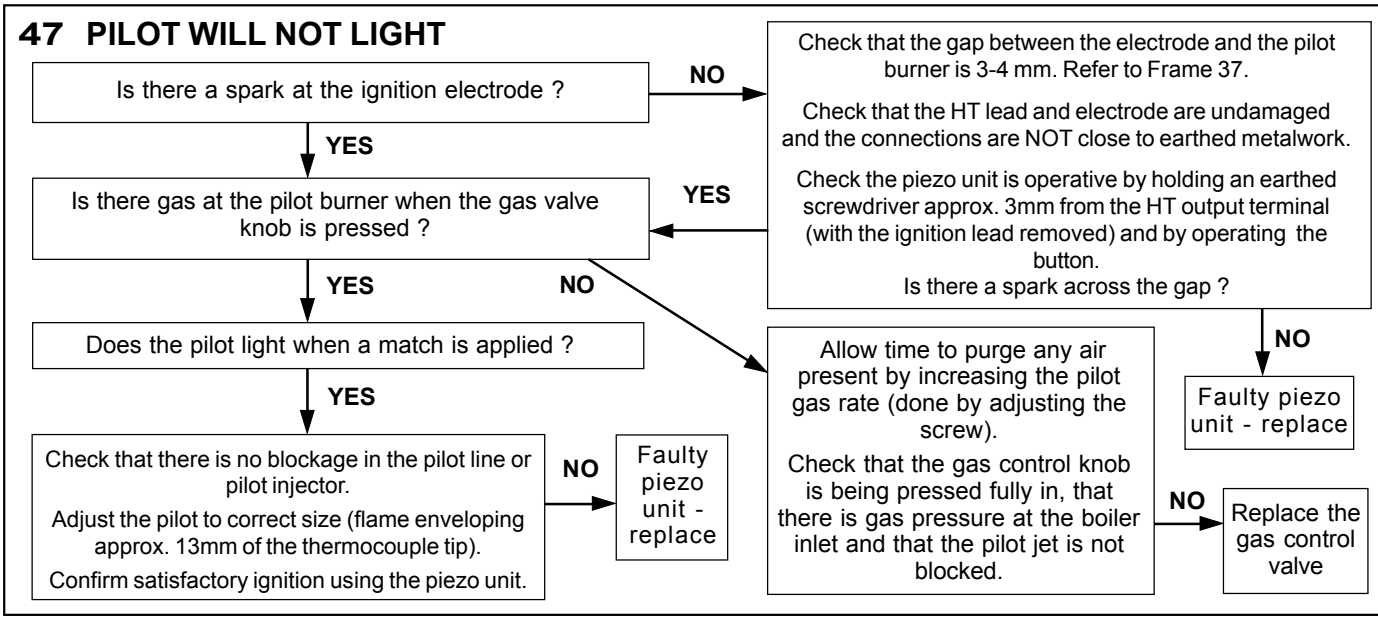

48 PILOT WILL NOT STAY LIT WHEN THE GAS CONTROL VALVE KNOB IS RELEASED

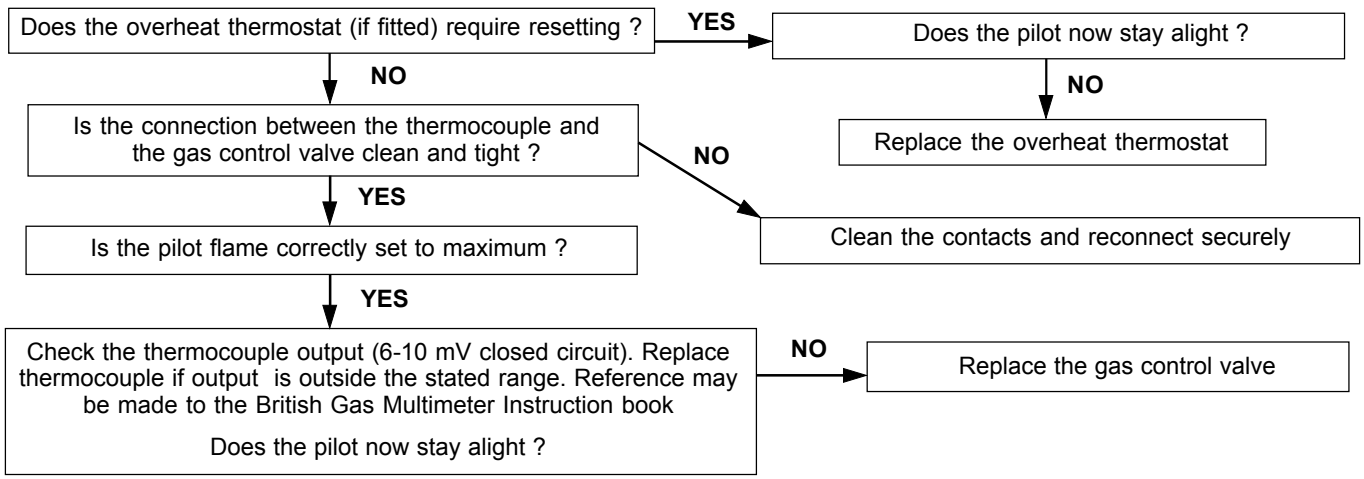

49 PILOT LIT BUT NO MAINS GAS

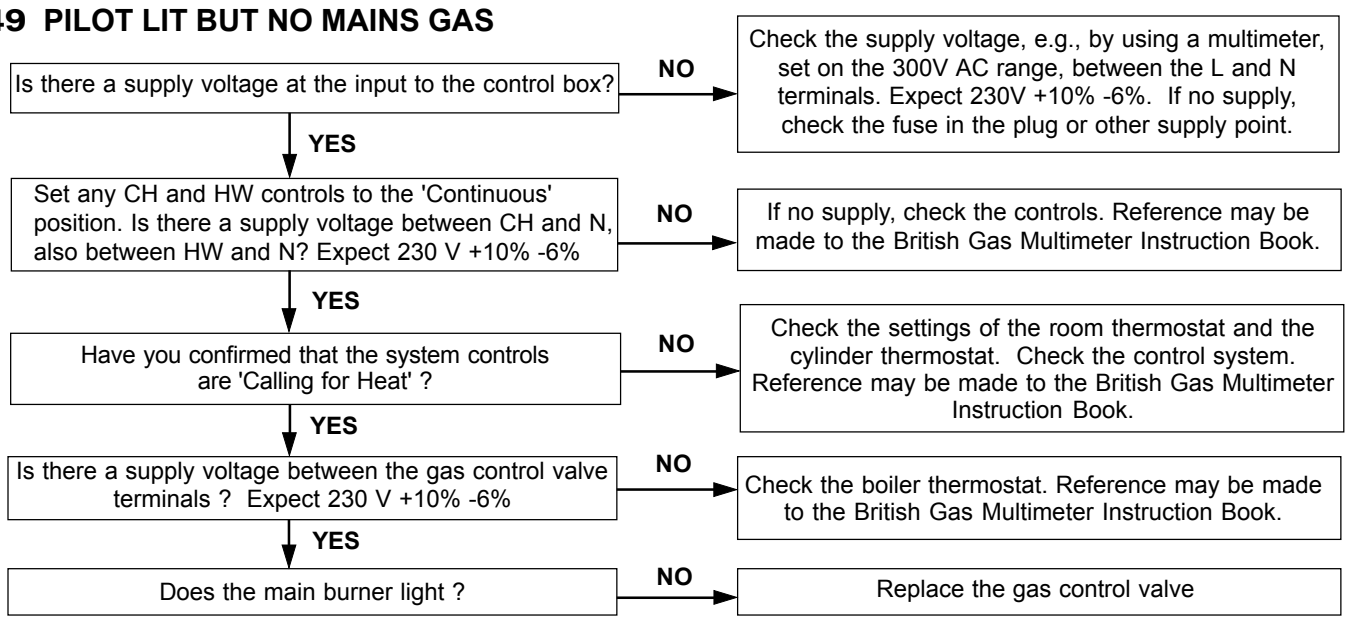

Note. *After any faults have been corrected, return all thermostatic and other controls to the previously noted settings*

SHORT LIST OF PARTS

The following are parts commonly required as replacement components, due to damage or expendability. Their failure or absence is likely to affect safety or performance of this appliance.

The list is extracted from the British Gas List of Parts, which contains all available spare parts.

The full list is held by British Gas, **Caradon Plumbing Limited** distributors and merchants.

When ordering spares please quote:

1. Boiler model
2. Appliance G.C. number
3. Description
4. Quantity
5. Product no.

Key No.	G.C. Part No.	Description	Qty.	Product No.
6	319 494	Sightglass assembly kit.	1	079 334
8	398 251	Main burner - BRAY Mk.9 AB 16641 (less injector)	1	012 533
9		Main burner injector:		
	398 051	BRAY Cat. 10 - size 1200: RS 3/40	1	004 190
	398 055	BRAY Cat. 10 - size 1400: RS 3/50	1	003 361
10	341 957	Pilot burner:		
		HONEYWELL Q 359A 1041 with injector Key No. 11	1	077 868
11	381 656	Pilot burner injector - HONEYWELL 45004-108-001	1	003 825
13	E01 507	Gas valve assy. (V4600A1130 - 230V)	1	079756
15	395 705	Piezo unit - MORGAN / MATROC 60080-002.	1	003 939
16	388 396	Ignition electrode - MORGAN / MATROC	1	003 038
17	E01 412	HT lead 460mm long	1	052 888
18	390 039	Thermocouple - HONEYWELL Q 309 A 2739, 600mm lg.	1	000 842
24		Thermostat - RANCO K36-P1354	1	151 903
25	308 557	Thermostat knob	1	111 904
40	E01 428	Flue baffle (RS 3/40 only)	1	151 061

50 SHORT PARTS

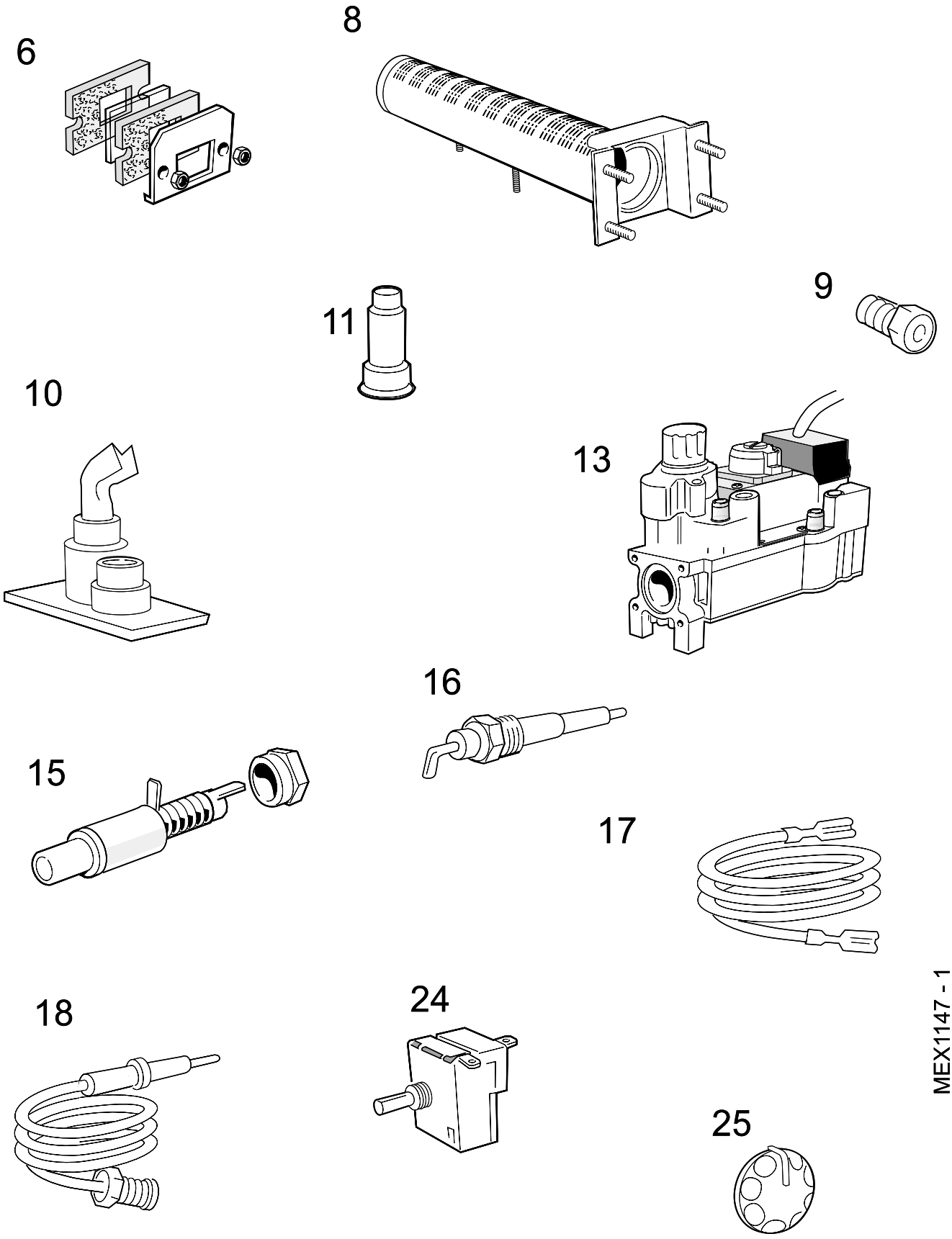

51 BURNER AND CONTROLS ASSEMBLY - Exploded View

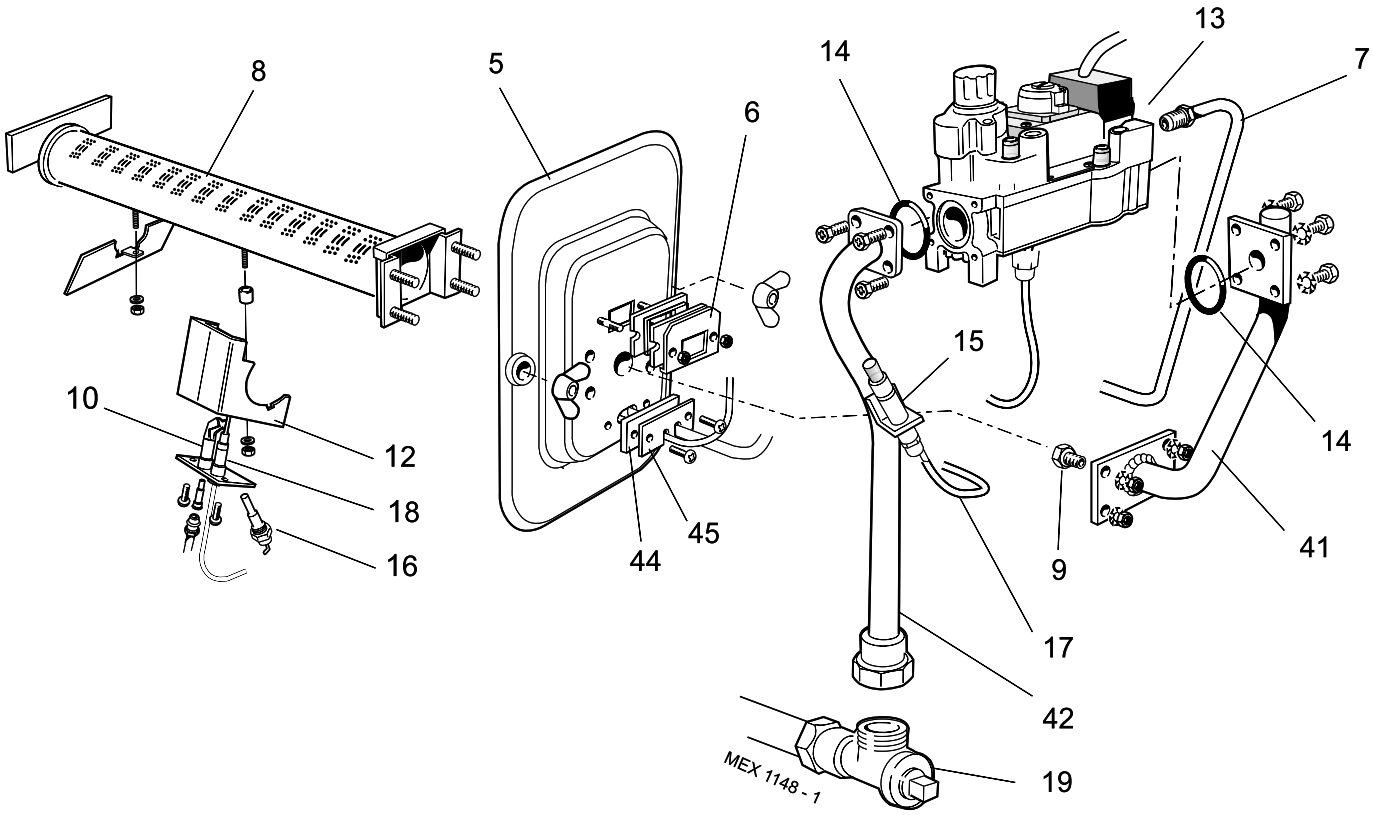

Legend

5. Front plate assembly.
6. Sightglass
7. Pilot pipe
8. Main burner.
9. Main burner injector.
10. Pilot burner.
12. Pilot burner bracket assy.
13. Gas valve.
14. 'O' ring.
15. Piezo unit.
16. Ignition electrode.
17. Ignition (HT) lead.
18. Thermocouple.
19. Gas cock.
41. Outlet pipe.
42. Inlet pipe.
44. Pilot sealing gasket.
45. Pilot sealing plate.

52 CONTROL BOX ASSEMBLY - Exploded View

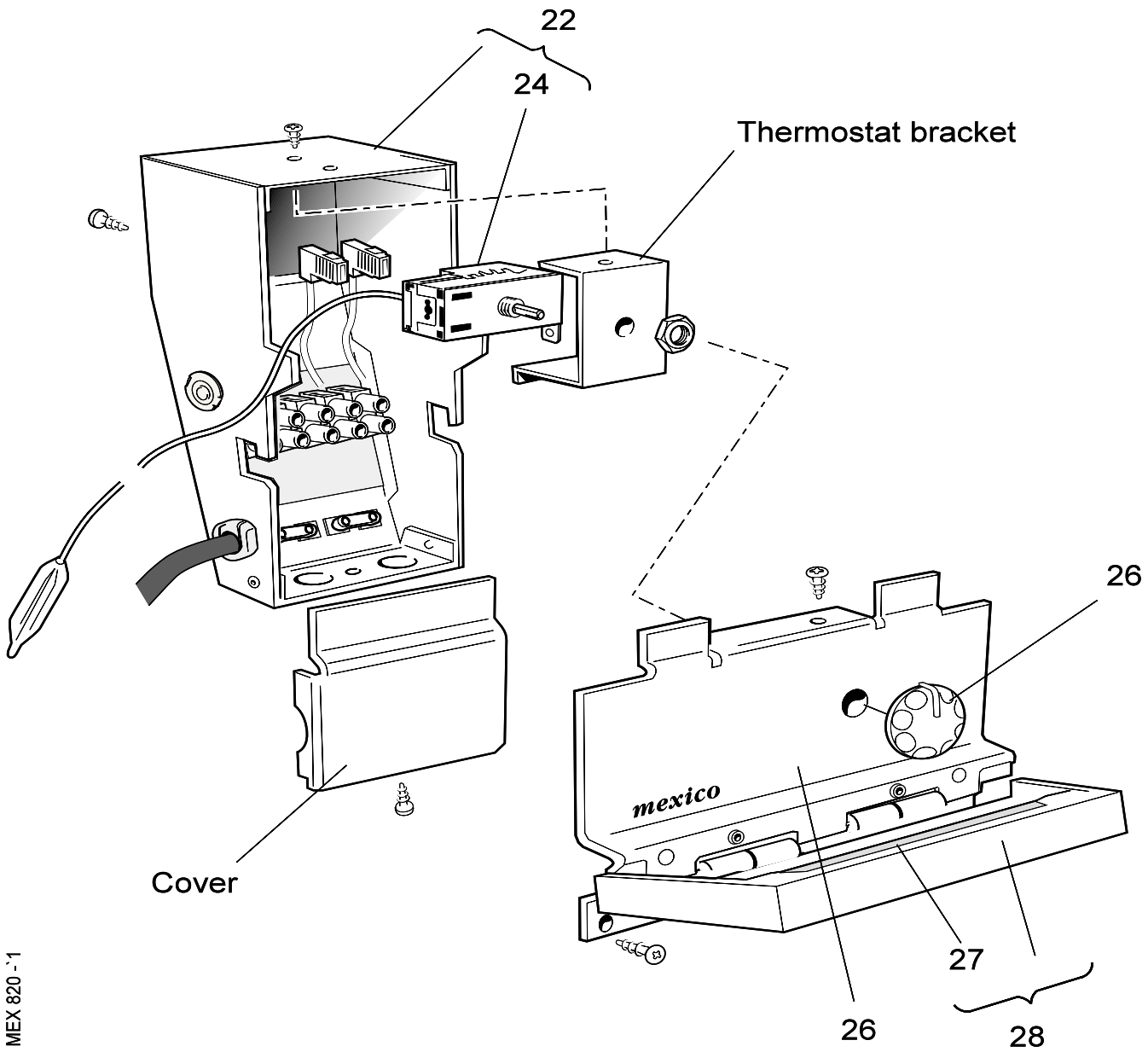

Legend

21. Controls panel complete.

22. Control box.

24. Thermostat.

25. Thermostat knob

26. Controls panel.

27. Magnetic strip.

28. Controls front panel.

53 BOILER CASING ASSEMBLY

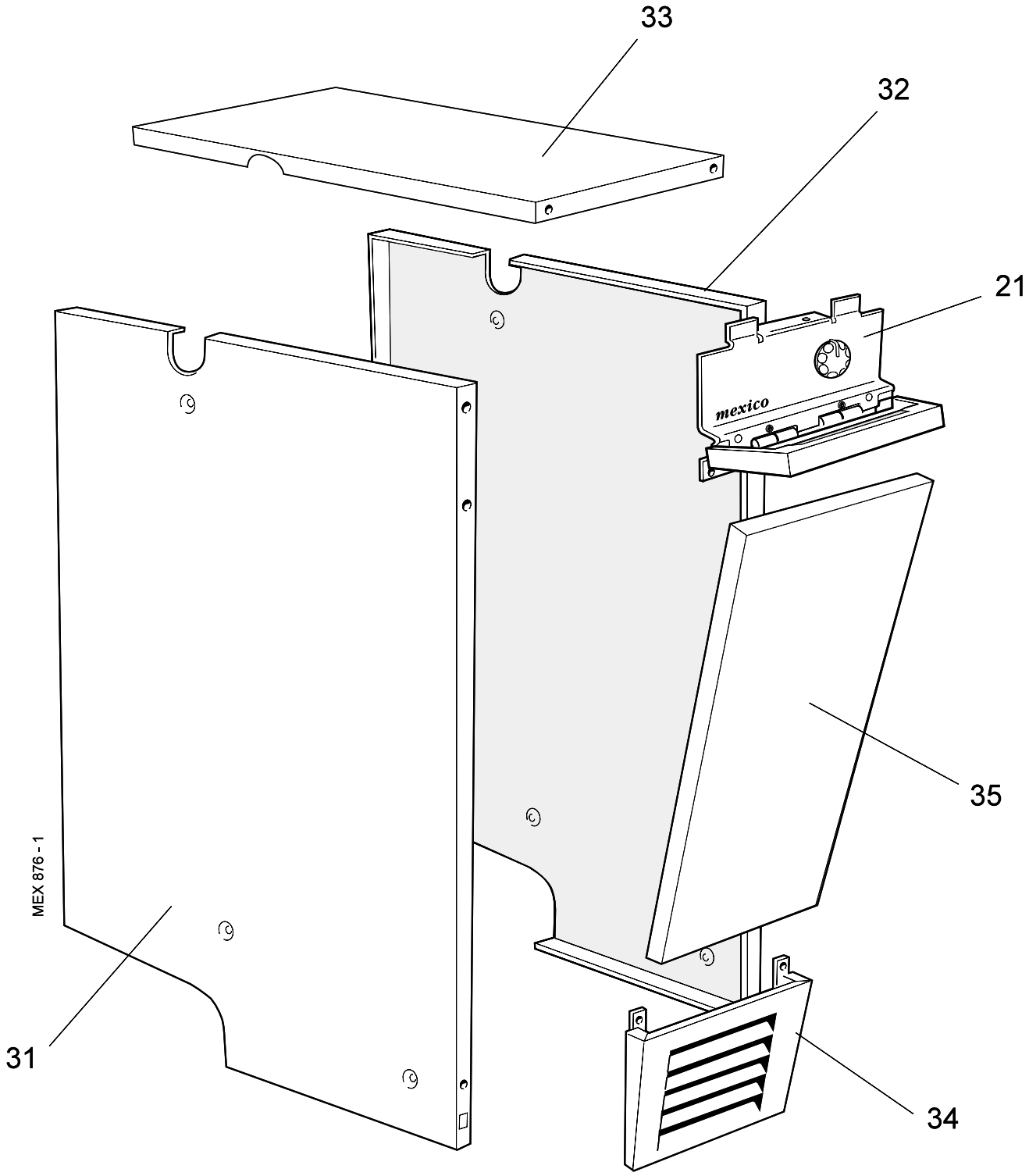

Legend

20. Casing complete.

21. Controls panel complete.

31. L.H. side panel.

32. R.H. side panel.

33. Top panel.

34. Grille assembly

35. Lower front panel.

THIS SYMBOL IS YOUR ASSURANCE OF QUALITY

These appliances are designed for use with Natural Gas only. They have been tested and conform with the provisions of BS. 6332 and BS. 5258.

The code of practice for the installation, commissioning & servicing of central heating systems

CERTIFIED PRODUCT
Manufactured under a BS EN ISO 9001: 1994
Quality System accepted by BSI

Caradon Plumbing Limited, P.O. Box 103, National Ave, Kingston upon Hull, HU5 4JN. Telephone: 01482 492 251 Fax: 01482 448 858. Registration No. London 322 137. Registered Office: National Avenue, Kingston upon Hull, HU5 4JN. *A subsidiary of Caradon p.l.c*

Technical Training

The Caradon Plumbing Limited Technical Training Centre offers a series of first class training courses for domestic, commercial and industrial heating installers, engineers and system specifiers.

For details of courses please ring: *01270 413 624*

Caradon Plumbing Limited pursues a policy of continuing improvement in the design and performance of its products. The right is therefore reserved to vary specification without notice.

September 1999 151 906 A04

Ideal Installer/Technical Helpline Tel: 01482 498 663

Your feedback
and your chance to win a free boiler

At Ideal we've been leaders in the design and engineering of robust and reliable boilers for over 90 years. We want to continue as leaders by listening to your suggestions for how to improve our boilers and our service. We'll be giving away a free boiler for the five best ideas every year (to be selected by our Technical Director). Please complete this form, using extra sheets if required, and post it or fax it to us on 01482 498699.

Boiler details

Model / Size *(e.g. Classic RS 230, Mexico CF 3/60 etc. Details on control panel door)*

Date of Installation

Installer details

Name

Address

Post Code

Telephone (*Please include STD code*)

How I would improve this boiler:

My general comments for Ideal:

Caradon
Plumbing Solutions

Ideal Installer/Technical Helpline Tel: 01482 498 663

Further information

If you would like information about Ideal Boilers please complete this sheet and fax it to us on 01482 498699 or post it to Caradon Plumbing Limited, PO Box 103, National Avenue, Kingston upon Hull, HU5 4JN.

Installer details

Name

Address

Post Code

Telephone (*Please include STD code*)

General information required

- ☐ *Please send me details of Ideal Training Courses.*
- ☐ *Please arrange for a technical representative to contact me.*
- ☐ *Please arrange for me to join an Ideal factory tour.*

Range guides required

- ☐ *The Ideal Guide: a specifier's and installer's introduction to the Ideal domestic boiler range.*
- ☐ *The Ideal Householders Guide: to assist the installer when presenting to his/her customers.*

Technical manuals required

- ☐ *The Ideal C class combi boiler*
- ☐ *The Ideal Classic wall hung boiler*
- ☐ *The Ideal Classic System wall hung boiler*
- ☐ *The Ideal Classic LX Deluxe wall hung boiler*
- ☐ *The Ideal Mexico floor standing boiler*
- ☐ *The Ideal Minimiser heat-saving boiler*
- ☐ *The Ideal Response combi boiler*
- ☐ *The Ideal Response SE super efficiency combi boiler*
- ☐ *The Ideal Systemiser SE super efficiency system boiler*
- ☐ *The Ideal Concord high output boiler*
- ☐ *The Ideal Buccaneer oil fired boiler*

Caradon
Plumbing Solutions

Caradon Plumbing Limited, PO Box 103, National Avenue, Kingston upon Hull, HU5 4JN. Telephone: 01482 492251 Fax: 01482 448858.

Ideal Installer/Technical Helpline Tel: 01482 498 663

U.I.N. 151 906 A0