THE IDEAL INSTALLATION & SERVICING MANUAL

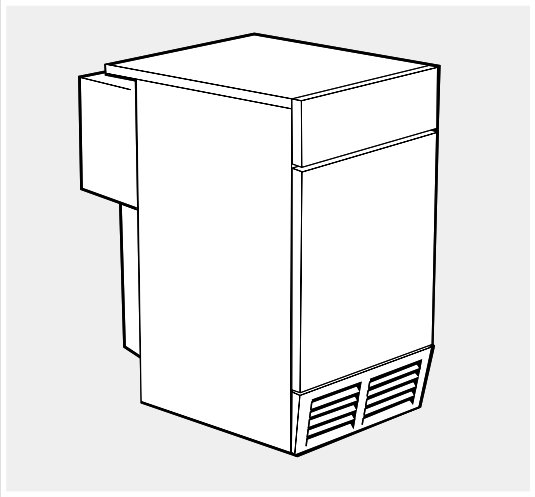

mexico

the floor standing boiler

Floor standing,
gas fired, balanced
flue room sealed boiler

Mexico Super
RS3/60P - 3/100P

Ideal BOILERS

Installers guide to domestic central heating boilers

Mexico:

The Floor Standing Gas Boiler

The Ideal Mexico is a range of cast iron floor standing gas central heating boilers. Both balanced or conventional flue versions are available. A complete range of both natural gas and propane models. The range offers Super models and, for when space is tight, there are Slimline models available.

Mexico: Britain's biggest selling floor standing boiler

The ideal replacement boiler...

Easy to install, easy to operate and easy to service. The Ideal Mexico really is the ultimate replacement floor standing range - you can depend on it.

Proven reliability...

Proven cast iron heat exchanger engineered and refined to be the most dependable floor standing boiler ensuring totally calm operation and quiet running, whatever the system demands.

Complete range...

27 models, including 4 Slimline models at only 250mm wide and 8 propane Super models. Option kit availability includes an easy to use programmer kit available on all models, an overheat thermostat kit for all models and a pump kit that can be housed within the casing, available for all models except the Super CF 3/140 & CF 3/140P.

Full system suitability...

All models are suitable for connection to pumped open vent central heating systems, pumped central heating combined with pumped or gravity indirect domestic hot water supply systems. They can also be used on sealed water systems when used in conjunction with the optional Overheat Thermostat Kit.

Free Guarantee: 1st Year Ideal Care

The home owner is entitled to 12 months free Ideal Care, which includes both parts and labour, to restore the boiler to full function. Please encourage the home owner to complete and return the registration form in their Householder's pack within 30 days of installation.

Optional Extra Year Cover with Ideal Care

You may wish to offer your own annual service plan or you may wish to advise the home owner to complete their application form for the appropriate level of extended Ideal Care - Silver, Gold or Platinum. Full details are available in the Ideal Care brochure.

CAUTION. To avoid the possibility of injury during the installation, servicing or cleaning of this appliance, care should be taken when handling edges of sheet steel components.

GENERAL

Table 1 - General Data

Boiler Size			RS 3/60P	RS 3/75P	RS 3/100P
Gas Supply Connection		in. BSP	Rc 1/2 (1/2)	Rc 1/2 (1/2)	Rc 3/4 (3/4)
Number of Boiler Sections			3	3	4
Flow and Return Connections			Rc 1 (1" BSP)		
MAXIMUM Static Water Head		m (ft.)	30.5 (100) (3 bar)		
MINIMUM Static Water Head		m (ft.)	1.0 (3.3)		
Electrical Supply			230 V ~50 Hz		
External Fuse Rating (Power Consumption)			3 A (5 W)		
Water Content		litre (gal.)	7.4 (1.6)	7.4 (1.6)	9.8 (2.1)
Dry Weight excluding terminal		kg. (lb.)	90 (198)	90 (198)	113 (249)
Boiler Size	Height	mm (in.)	850 (33.5)		
	Width	mm (in.)	440 (17.4)		
	Depth	mm (in.)	533 (21.0)		
Gas Type			II_{2H3P}		

Table 2 - Performance Data

Boiler Size		RS 3/60P	RS 3/75P	RS 3/100P
Boiler Input				
NOMINAL	kW (Btu/h)	21.4 (73 000)	28.2 (96 200)	35.7 (121 800)
Gas Consumption	l/s (ft.^{3}/h)	0.225 (29.2)	0.297 (38.5)	0.376 (48.7)
Boiler Output to Water				
NOMINAL	kW (Btu/h)	17.5 (59 600)	23.2 (79 000)	28.8 (98 100)
Burner Setting Pressure (hot)				
NOMINAL	mbar (in w.g.)	35.2 (14.1)	35.1 (14.0)	35.2 (14.1)
Inlet Pressure				
NOMINAL	mbar (in w.g.)	37 (14.8)		
Flue Gas Flow Rate	g/s	10.3	13.5	17.1
Flue Gas Temperature	^{0}C	156	159	169
Seasonal Efficiency (SEDBUK)*	%	73.5	73.6	72.9

*The value is used in the UK government's Standard Assessment Procedure (SAP) for energy rating of dwellings.
The test data from which it has been calculated have been certified by BGplc 0087

Notes.

1. *Gas consumption is calculated using a calorific value of 95.0 MJ/m^3 (2500 Btu/ft.^{3}.)*
2. *To obtain the fuel consumption in liquid form divide the above figures by 270.*
3. *The appliance is pre-set at the factory to give the nominal output at an inlet pressure of 37 mbar (14.8 in.w.g.)*
4. *A conversion kit is available to convert this applicance for use on natural gas. This kit contains all parts and instructions for setting up on natural gas. Once converted it is not possible to convert back to propane gas.*

Key to symbols

IE = Ireland **GB** = United Kingdom (Countries of destination)

PMS = Maximum operating pressure of water

C_{11} = A room sealed appliance designed for connection via ducts to a horizontal terminal, which admits fresh air to the burner and discharges the products of combustion to the outside without a fan in the combustion products circuit.

II_{2H3P} = An appliance designed for use on 2nd Family gas, Group H only and 3rd Family gas group P.

CONTENTS

Air Supply 7

Boiler Assembly - Exploded view 9

Boiler Clearances 6

Burner Assembly - Exploded view ..... 36 & 37

Electrical Connections 15

Electrical Diagram 16

Electrical Supply 8

Extension Ducts - Fitting 14

Fault Finding 31

Flue Fitting 13

Flueing 7

Gas Safety Regulations 5

Gas Supply 7

Initial Lighting 19

Installation 9

Mandatory Requirements 5

Pump 15

Servicing 21

Short List of Parts 32

System Diagrams (Electrical) 17

Terminal Guards 7

Terminal Sizes 6

Water Connections ..... 5 & 14

Water Systems 15

Mexico Super RS

Mexico Super	RS 3/60P	G.C. No. 41 349 34
Mexico Super	RS 3/75P	G.C. No. 41 349 35
Mexico Super	RS 3/100P	G.C. No. 41 349 36

Propane only — Appliance type: C_{11}

Certified - P.I. No. 87 AT 14

Destination Countries: GB & IE.

INTRODUCTION

The **Mexico Super RS** propane range above is comprised of floor standing, natural draught, balanced flue gas boilers. They are rated to provide central heating outputs of
17.5 kW (59 600 Btu/h) to 28.8 kW (98 100 Btu/h).

The boiler has a cast iron heat exchanger and is supplied fully assembled, complete with a white enamelled mild steel casing.

A door at the top of the casing front panel hinges down, revealing the boiler thermostat control (and programmer, if fitted).

The boilers are suitable, as standard, for connection to open-vented systems ONLY - an overheat thermostat kit is available to allow the boiler to be used on sealed water systems.

The systems may be:

- pumped or gravity circulating indirect DHW only
- pumped central heating only
- pumped central heating combined with either a pumped or gravity circulating indirect DHW circuit.

OPTIONAL EXTRA KITS

Programmer Kit	Fits neatly within the casing. Separate fitting instructions are included with this kit.
Pump Kit	Fits neatly within the casing. Separate fitting instructions are included with this kit.
Overheat Thermostat Kit	is available to allow the boiler to be used on sealed water systems.

NOTE TO THE INSTALLER: LEAVE THESE INSTRUCTIONS ADJACENT TO THE GAS METER. ALSO COMPLETE THE BENCHMARK LOG BOOK AND GIVE THIS TO THE CUSTOMER.

benchmark™

GAS SAFETY

Gas Safety (Installation and Use) Regulations 1994, amendments 1996 or rules in force.

It is law that *all* gas appliances are installed by a CORGI registered installer (identified by ❀) in accordance with the above regulations. Failure to install appliances correctly could lead to prosecution. It is in your own interest, and that of safety, to ensure the law is complied with.

The installation of the boiler MUST also be in accordance with the latest I.E.E (BS 7671) Wiring Regulations, local building regulations, bylaws of the local water authority, the Building Regulations and Building Standards (Scotland) and any relevant requirements of the local authority.

Detailed recommendations are contained in the following British Standard Codes of Practice:

BS. 6891	Low pressure installation pipes.
BS. 6798	Installation of gas fired hot water boilers of rated input not exceeding 60 kW.
BS. 5449:1	Forced circulation hot water systems (small bore and microbore domestic central heating systems).
BS. 5546	Installation of gas hot water supplies for domestic purposes (2nd Family Gases).
BS. 5440: 1	Flues for gas appliances of rated input not exceeding 60 kW.
BS. 5440: 2	Ventilation for gas appliances of rated input not exceeding 60 kW.
BS 7593	Treatment of water in Domestic Hot Water Central Heating Systems.

Health and Safety Document No. 635.

The Electricity at Work Regulations, 1989.

Manufacturer's notes must NOT be taken in any way as overriding statutory obligations.

IMPORTANT. These appliances are certificated by the British Standards Institution for safety and performance. It is important, therefore, that no external control devices, e.g. flue dampers, economisers etc., are directly connected to these appliances unless covered by these Installation and Servicing Instructions or otherwise recommended by **Caradon Plumbing Ltd.** in writing. If in doubt please enquire.

Any direct connection of a control device not approved by **Caradon Plumbing Ltd.** could invalidate the BSI Certification and the normal appliance warranty. It could also infringe the Gas Safety Regulations and the above regulations or other statutory requirements.

LOCATION OF BOILER

The boiler must be installed on a flat and level floor, capable of adequately supporting the weight of the boiler and any ancillary equipment.

The boiler may be fitted on a combustible floor.

Insulation is not necessary, unless required by the local authority.

The boiler must not be fitted outside.

Timber Framed Buildings
If the boiler is to be fitted in a timber framed building it should be fitted in accordance with the Institute of Gas Engineering document IGE/UP/7:1998.

1 BOILER WATER CONNECTIONS

1. This appliance is NOT suitable for use in a direct hot water system.
2. If the boiler is to be used on a sealed system, an **Overheat Thermostat Kit** is available which must be installed in accordance with the instructions supplied with the kit.

Boiler	Dimension A
RS 3/60 P **RS 3/75 P**	218mm (8 5/8")
RS 3/100 P	291mm (11 1/8")

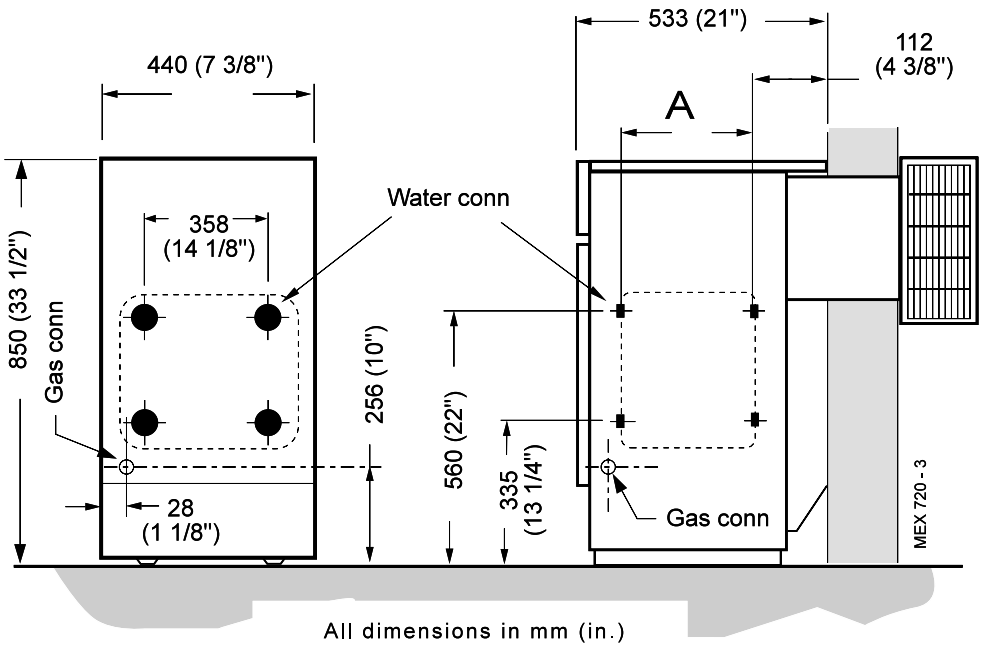

Bathrooms

The boiler may be installed in any room or internal space, although particular attention is drawn to the requirements of the current I.E.E. (BS 7671) Wiring Regulations and, in Scotland, the electrical provisions of the building regulations applicable in Scotland with respect to the installation of the boiler in a room or internal space containing a bath or shower.

Where a room-sealed appliance is installed in a room containing a bath or shower then the appliance and any electrical switch or appliance control utilising mains electricity should be so situated that it cannot be touched by a person using the bath or shower.

Where installation will be in an unusual location, special procedures may be necessary and BS.6798 gives detailed guidance on this aspect.

Compartment Installations

A compartment used to enclose the boiler MUST be designed and constructed specially for this purpose.

An existing cupboard or compartment may be used, providing it is modified for the purpose.

In both cases details of essential features of cupboards/ compartment design, including airing cupboard installation, are to conform to the following:

- BS. 6798.
- The position selected for installation MUST allow adequate space for servicing in front of the boiler and for air circulation around the boiler.

  Side clearance is only necessary for installation. The amount of side clearance will depend upon the type of connection used.
- This position MUST also permit the provision of a satisfactory flue termination.
- For the minimum clearances required for safety, and subsequent service, see Frame 2.

2 FLOOR MOUNTING AND BOILER CLEARANCES

Flammable materials must not be placed in close proximity to the appliance. Materials giving off flammable vapours must not be stored in the same room as the appliance.

Floor mounting

1. The floor must be flat, level and of suitable load bearing capacity.
2. The back of the boiler may be fitted up to the wall.

Boiler clearances

The minimum overall dimensions of the space in which the boiler is to operate and to facilitate servicing are as follows:-

Boiler Size	Width	Depth	Height
RS 3/60P, RS 3/75P, RS 3/100P	460mm (18")	535mm (21")	870mm (34 1/4")

Additional space will be required for installation, depending upon site conditions.

IMPORTANT.

In order to facilitate gas connection, a clearance of at least 100 mm (4") must be available at either the left hand side or the right hand side DURING installation. Refer to Frame 6.

In addition a MINIMUM clearance of 533 mm (21") MUST be available at the front of the boiler, for servicing.

Terminal sizes

Boiler Size	Depth	Height	Width
RS 3/60P	107	198	281
RS 3/75P	152	338	372
RS 3/100P	182	431	372

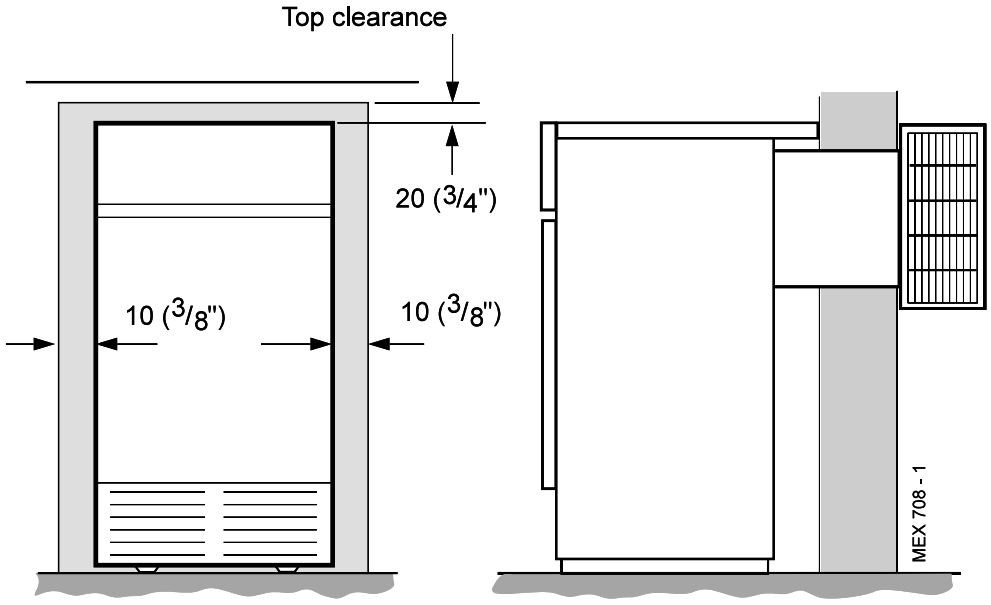

Front view **Side view**

GAS SUPPLY

The local Propane supplier should be consulted at the installation planning stage, in order to establish the availability of an adequate supply of gas.

Check that the appliance is suitable for the proposed gas supply.

Installation pipes, cylinders and pressure regulators should be fitted in accordance with BS.5482.1.

Bulk tank installations must comply with the Home Office code of practice for the storage of liquified petroleum gas at fixed installations.

The complete installation MUST be tested for gas soundness and purged as described in the above code.

FLUE INSTALLATION

Some pluming may occur at the termination so terminal positions where this could cause a nuisance should be avoided.

The flue must be installed in accordance with the recommendations of BS. 5440:1.

The following notes are intended for general guidance:-

1. The boiler MUST be installed so that the terminal is exposed to external air.
2. It is important that the position of the terminal allows the free passage of air across it at all times.
3. Minimum acceptable spacing from the terminal to obstructions and ventilation openings are specified in Table 3.
4. Where the lowest part of the terminal is fitted less than 2m (6' 6") above a balcony, above ground or above a flat roof to which people have access then the terminal MUST be protected by a purpose designed guard.

Table 3 - Balanced flue terminal position

Terminal Position	Minimum Spacing
1. Directly below an opening window, air vent or other ventilation opening	300 mm (12")
2. Below guttering, drain pipes or soil pipes	300 mm (12")
3. Below eaves	300 mm (12")
4. Below balconies or a car port roof	600 mm (24")
5. From vertical drain pipes or soil pipes	75 mm (3")
6. From internal or external corners	600 mm (24")
7. Above adjacent ground, roof or balcony level	300 mm (12")
8. From a surface facing the terminal	600 mm (24")
9. From a terminal facing a terminal	600 mm (24")
10. From an opening in a car port (e.g. door or window) into dwelling	1200 mm (48")
11. Vertically from a terminal on the same wall	1500 mm (60")
12. Horizontally from a terminal on the wall	300 mm (12")

Terminals guards are available from boiler suppliers. In case of difficulty seek advice from:

Tower Flue Components Ltd.,
Vale Rise, Tonbridge, Kent TN9 1TB
Telephone No. 01732 351 555

Ensure that the guard is fitted centrally

5. Where the terminal is fitted within 1000mm (39 1/2") of a plastic or painted gutter or 500mm (19 1/2") of painted eaves then an aluminium shield at least 1000mm (39 1/2") long should be fitted to the underside of the gutter or painted surface.
6. The air inlet/products outlet duct and the terminal of the boiler MUST NOT be closer than 25mm (1") to combustible material. Detailed recommendations on the protection of combustible material are given in BS.5440: 1990.

IMPORTANT.

It is absolutely ESSENTIAL to ensure, in practice, that products of combustion discharging from the terminal cannot re-enter the building or any other adjacent building through ventilators, windows, doors, other sources of natural air infiltration or forced ventilation/air conditioning. If this should occur, the appliance MUST be turned OFF, labelled 'unsafe' and corrective action taken.

TERMINAL

The terminal assembly can be adapted to accommodate various wall thicknesses. Refer to Frames 9 and 10.

AIR SUPPLY

Detailed recommendations for air supply are given in BS.5440:2. The following notes are for general guidance:

1. It is NOT necessary to have a purpose provided air vent in the room or internal space in which the boiler is installed.
2. If the boiler is to be installed in a cupboard or compartment, permanent air vents are required (for cooling purposes) in the cupboard/compartment, at both high and low levels. The air vents must either communicate with room/internal space, or be direct to outside air. The minimum effective areas of the permanent air vents, required in the cupboard/compartment, are specified as follows and are related to maximum rated heat input.
3. Both air vents MUST communicate with the same room or internal space or MUST be on the same wall to outside air.
4. In siting the air vents care must be taken to avoid the freezing of pipework.

Table 4 - High and low vent areas

Boiler	Air from room/internal space cm² (in.²)		Air direct from outside cm² (in.²)	
	High level	Low level	High level	Low level
RS 3/60P	212 (33)	212 (33)	106 (17)	106 (17)
RS 3/75P	269 (42)	269 (42)	135 (21)	135 (21)
RS 3/100P	350 (55)	350 (55)	175 (28)	175 (28)

WATER CIRCULATION SYSTEM

The boiler must NOT be used for direct hot water supply . The boiler is suitable for connection to pumped open vent central heating systems, pumped central heating combined with pumped or gravity indirect domestic hot water supply systems.

The boiler is NOT suitable for gravity heating systems. The hydraulic resistances of the boilers at *maximum output* with 11 °C (20 °F) temperature differentials are shown in the graph below.

The central heating system should be in accordance with BS. 6798 and, in addition, for smallbore and microbore systems, BS. 5449:1.

The domestic hot water system, if applicable, should be in accordance with the relevant recommendations of BS. 5546.

Copper tubing to BS. 2871:1 is recommended for water carrying pipework.

The hot water storage cylinder MUST be of the indirect type and should preferably be manufactured of copper.

Single feed, indirect cylinders are not recommended and MUST NOT be used on sealed systems.

The hot water cylinder and ancillary pipework not forming part of the useful heating surface should be lagged to prevent heat loss and any possible freezing - particularly where pipes run through roof spaces and ventilated underfloor spaces.

IMPORTANT

The boiler must be vented. If venting cannot be done via a flow connection a separate vent MUST be fitted by the installer.

Draining taps MUST be located in accessible positions, which permit the draining of the whole system - including the boiler and hot water storage vessel. They should be at least 1/2" BSP nominal size and be in accordance with BS. 2879.

If required, a drain tap (not supplied) may be fitted to an unused bottom (1" BSP) tapping on the front of the boiler.

THERMOSTATIC RADIATOR VALVES

Caradon Plumbing Ltd. recommend that heating systems utilising full thermostatic radiator valve control of temperature in individual rooms should also be fitted with a room thermostat controlling the temperature in a space served by radiators not fitted with such a valve, as stated in BS. 5449.

When thermostatic radiator valves are used, the space heating temperature control over a living / dining area or hallway having a heating requirement of at least 10% of the boiler heat output should be achieved using a room thermostat, whilst other rooms are individually controlled by thermostatic radiator valves. However, if the system employs thermostatic radiator valves on all radiators or two port valves without end switches then a bypass must be fitted in order to ensure a flow of water should all the valves be in the closed position.

ELECTRICAL SUPPLY

WARNING. The appliance MUST be efficiently earthed.

Wiring external to the appliance MUST be in accordance with the current I.E.E. (BS 7671) Wiring Regulations and any local regulations which apply.

The boiler is supplied for 230 V ~ 50 Hz single phase.
The fuse rating is 3A.

Connection must be made in a way that allows complete isolation of the electrical supply - such as a double pole switch, having a 3mm (1/8") contact separation in both poles, or a plug and socket serving only the boiler and system controls.

The means of isolation must be accessible to the user after installation.

For bathroom installations the point of connection to the mains must be situated outside the bathroom.

Water Flow Rate and Pressure Loss

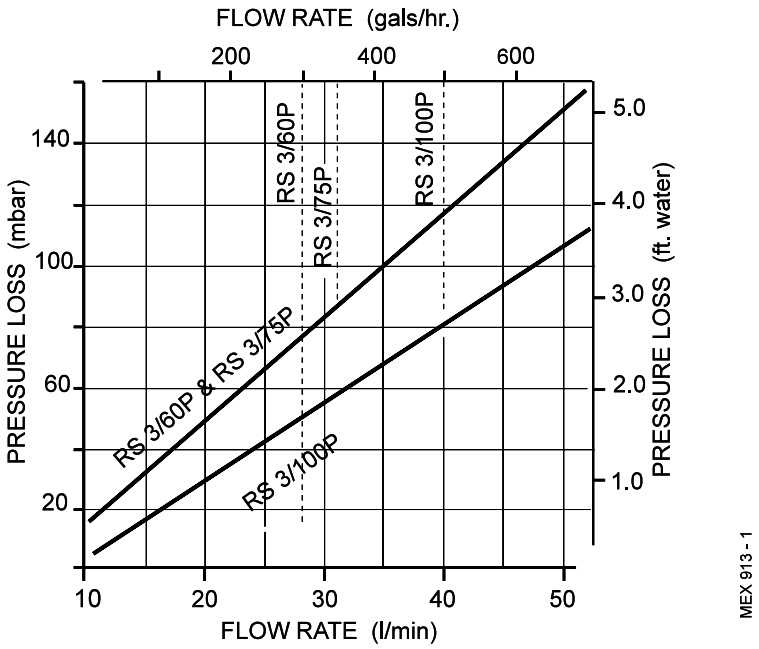

Dotted lines indicate flow rates equivalent to a temperature rise of 11 °C (20 °F)

3 BOILER ASSEMBLY - Exploded View

Mexico Super RS 3/60P with casing removed.

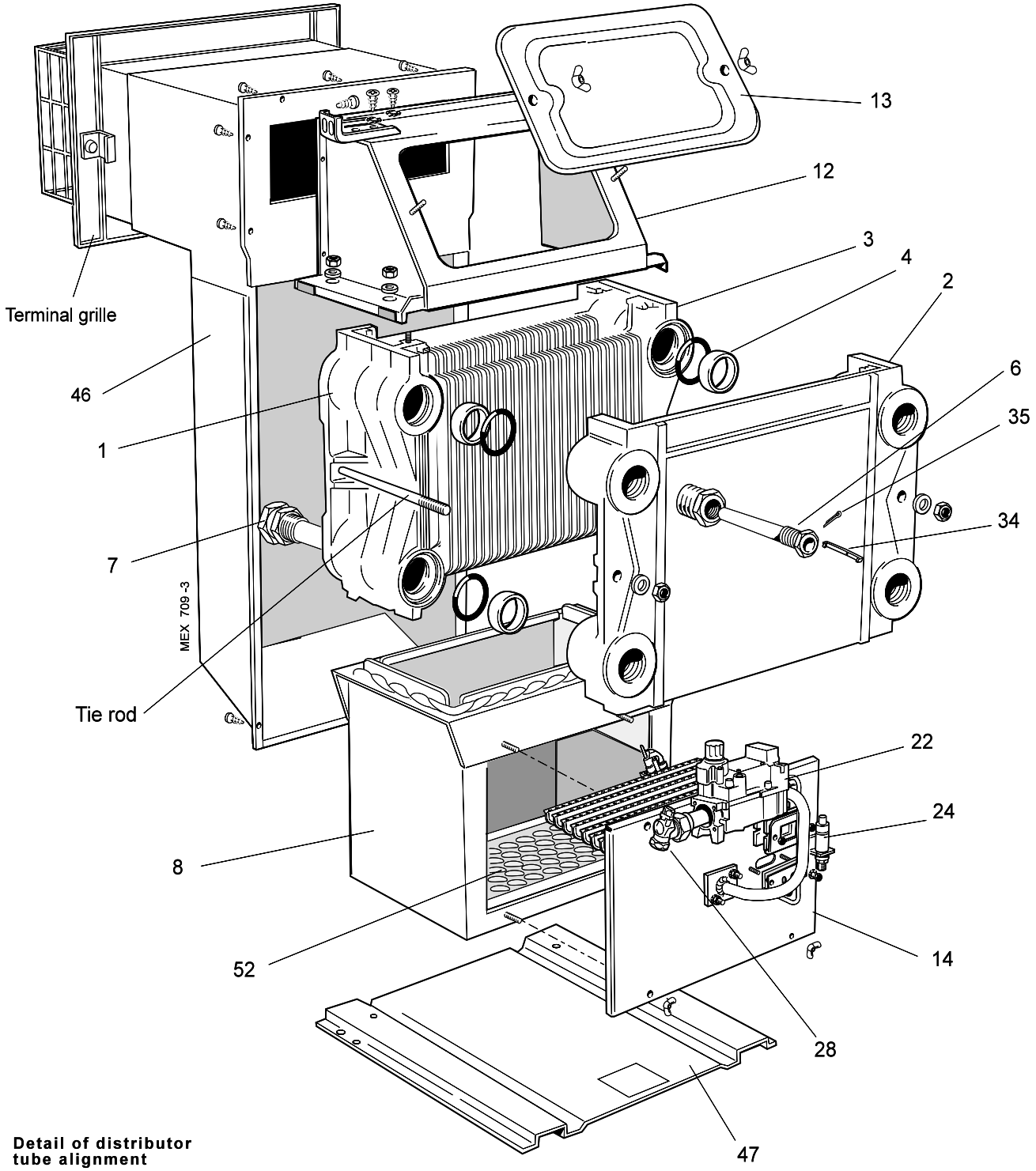

Detail of distributor tube alignment

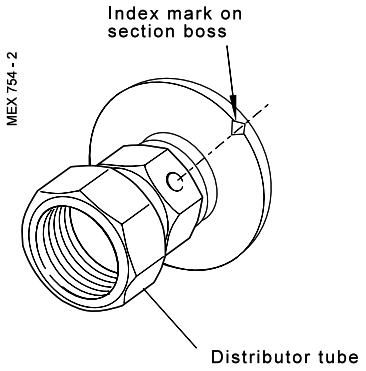

LEGEND

1. Heat exchanger assy.
2. End section.
3. Middle section.
4. Section alignment rings and 'O' rings.
6. Thermostat pocket.
7. Distributor tube.
8. Combustion chamber.
12. Collector hood.
13. Cleanout cover.
14. Front plate assy.
22. Gas control valve.
24. Piezo igniter.
28. Gas cock.
34. Phial clip.
35. Split pin
46. Air duct assy.
47. Boiler base plate.
52. Heat shield.

4 UNPACKING

The boiler is supplied fully assembled in Pack A, together with either one or two of four packs: **B, B1, C** or **D.** Packs **B, B1** or **C** contain the flue terminal appropriate to the wall thickness. **Pack D** contains the flue terminal extensions.

Unpack and check the contents.

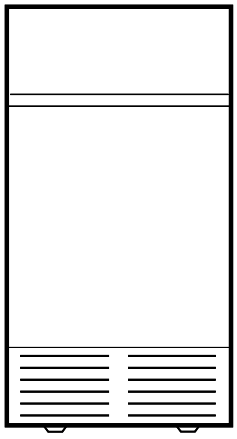

complete boiler assembly

PACK 'A' CONTENTS

- Complete boiler assembly.
- The Hardware Pack (listed separately below).
- These Installation and Servicing Instructions.
- User's Instructions.

HARDWARE PACK

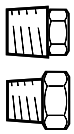

- 1" BSP plugs - 6 off
- 1" x 1/2" BSP reducing bush - 1 off

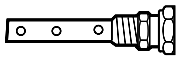

- Distributor tube

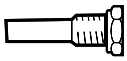

- Thermostat pocket -1 off
- Thermostat clip - 1 off

- Thermostat retaining pin - 1 off

- Output setting label -1 off

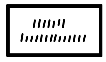

FLUE PACKS

Packs B, B1 and C contents

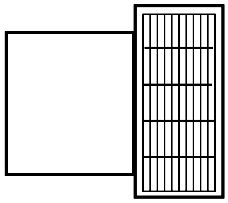

- Flue terminal assembly

- Sachet of sealing mastic - 2 off

Pack D contents

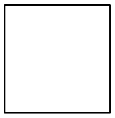

- Flue terminal extension

- Sachet of sealing mastic - 2 off

- Adhesive tape

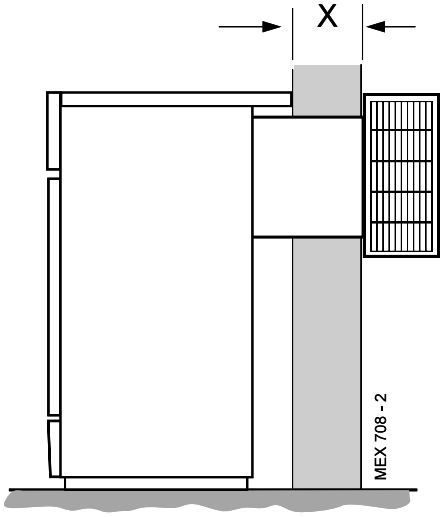

Table 6: this table shows the number of flue packs required for the given wall thicknesses

Wall thickness Dimension (duct length) X shown above				Flue pack(s) required
Boiler fitted flush with wall		**Boiler fitted in line with 600 mm kitchen units**		
114 to 191 mm	(4 1/2" to 7 1/2")	up to 125 mm	(up to 5")	**C**
229 to 305 mm	(9" to 12")	163 to 242 mm	(6 1/2" to 9 1/2")	**B**
318 to 394 mm	(12 1/2" to 15 1/2")	253 to 332 mm	(10" to 13")	**B1**
406 to 584 mm	(16" to 23")	340 to 518 mm	(13 1/2" to 20 1/2")	**B & D**

5 BOILER CASING REMOVAL

To install the boiler the casing MUST be removed.

1. Lift off the lower front panel.
2. Remove 2 screws and lift off grille assembly.
3. Remove the gas valve cover by removing the retaining screw. Disconnect the electrical leads.
4. Release the gas valve lead from the retaining clip.
5. Remove the 2 screws securing the control panel and disengage the panel by lowering and pulling it forward.
6. Remove the 2 screws securing the top panel to the sides.

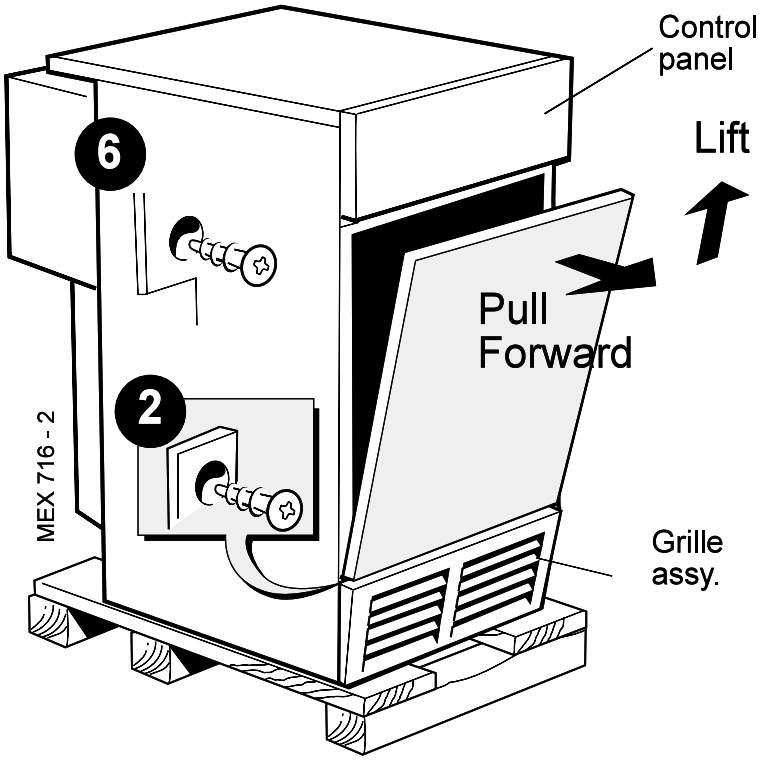

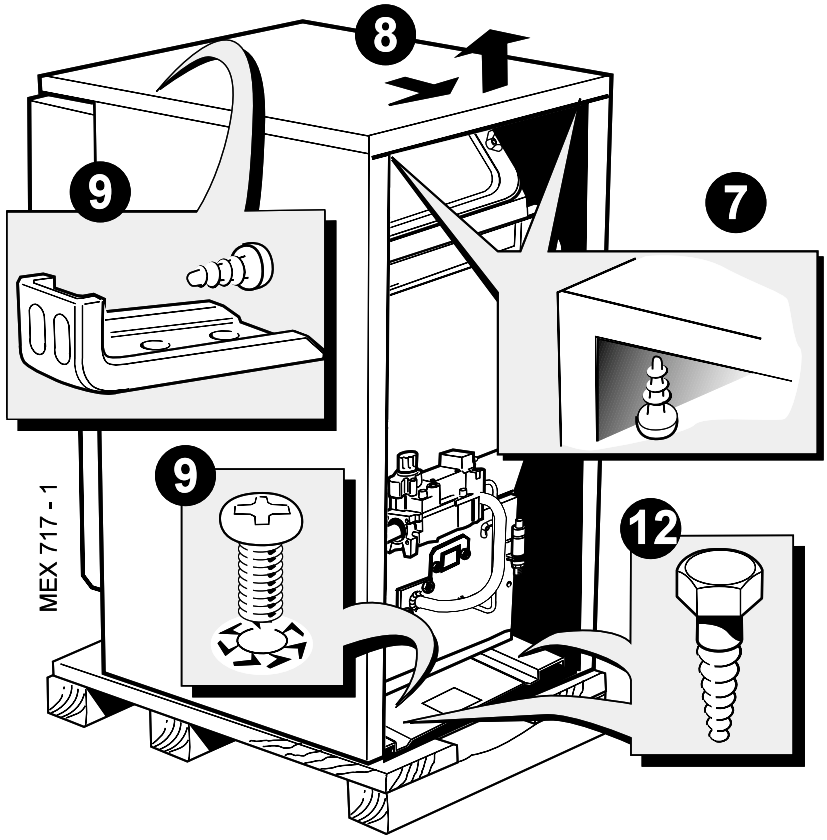

7. Draw the top panel forward and lift it off the boiler.
8. Remove the 2 screws securing LH side panel to the flue collector and baseplate.
9. Pull the panel forward, lifting it clear of the locating peg and remove.
10. Repeat steps 8 and 9 to remove the RH panel.
11. The boiler is held to the packaging base by 4 M6 hex. head screws. Remove the front screws, slacken the rear screws and remove the boiler from the packaging base.

6 PREPARING THE BOILER

Table 7 - Fully Pumped Systems

Connections - as viewed at front		Thermostat Position
Back Section		Front Section
Flow	Return	Top
LH	LH	LH
LH	RH	LH
RH	RH	RH
RH	LH	RH

Table 8 - Gravity Domestic Hot Water and Pumped Central Heating

Connections - as viewed at front				Thermostat Position
Back Section				Front Section
CH		DHW		
Flow	Return	Flow	Return	Top
LH	LH	RH	RH	LH
LH	RH	RH	LH	LH
RH	RH	LH	LH	RH
RH	LH	LH	RH	RH

Notes.

- *Before placing the boiler in the selected position any gas and water connections at the rear of the boiler should be prepared, due to the possible lack of access.*
- *If an optional Pump Kit is to be used then it must be fitted at this stage. Refer to separate fitting instructions included with the kit.*
- *The pump may be fitted to the FLOW or the RETURN.*

1. Screw the distributor tube (supplied with a 1" BSP x 28mm copper adaptor) into the selected heating return tapping, using an appropriate jointing material.

IMPORTANT.

It is **IMPERATIVE** that the index mark on the distributor tube bush is in alignment with the mark on the section boss, as shown in Frame 3.

DO NOT disturb it when connecting subsequent pipework.

Fully pumped systems using more than 1 pump, serving separate zones, must have a common return connection to the distributor tube.

2. Select the desired pumped flow tapping.
3. Screw the supplied boiler thermostat pocket into the appropriate front section tapping, using an approved jointing material. Refer to Tables 7 and 8.
4. Connect pipe fittings to the rear tappings and plug any unused tappings.

Note. *If using iron elbows fit a short straight connector into the boiler tapping first, to clear the casing.*

7 PREPARING THE WALL

1. Cut the appropriate hole in the wall for insertion of the terminal assembly.

Notes.

a. Make good the hole on the INSIDE of the building to the given dimensions BEFORE fitting the boiler, to facilitate sealing between the terminal and the wall when the boiler is in position.

b. The terminal MUST NOT come into contact with a combustible material such as that used in non-standard construction of timber frame and plasterboard etc.

2. Place the boiler in the selected position.

Note. *If an extension duct D is to be fitted, this must be done BEFORE the boiler is placed in position. Refer to Frame 10.*

3. Make good the brickwork around the air duct.

Boiler Size	Dim. A	Dim. B
RS 3/60P	696 (27 3/8")	200(7 7/8")
RS 3/75P	672 (26 1/2")	248 (9 3/4")
RS 3/100P	626 (24 5/8")	340 (13 3/8")

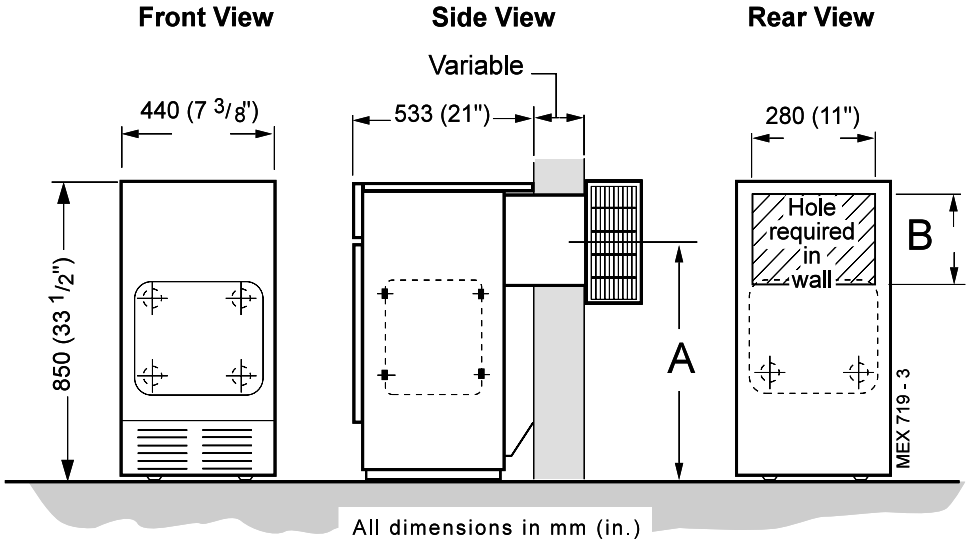

8 FITTING THE FLUE ASSEMBLY - Duct lengths up to 400 mm (16") - RS 3/60P ONLY

Flue Terminal assembly

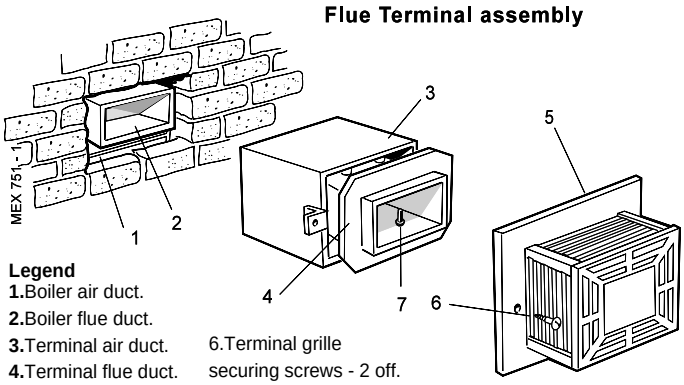

Legend
1.Boiler air duct.
2.Boiler flue duct.
3.Terminal air duct.
4.Terminal flue duct.
5.Terminal grille.
6.Terminal grille securing screws - 2 off.
7.Terminal flue securing screws - 4 off.

A. Air duct join
B. Flue duct join

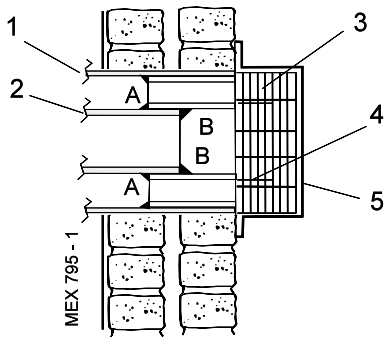

Flue terminal shown in position

1. Remove the 2 securing screws (6) and separate the terminal grille from the terminal assembly.
2. Remove the 4 securing screws (7) and separate the terminal flue duct from the terminal air duct.
3. From OUTSIDE of the building, pass the terminal air duct through the wall opening and slide it into the boiler air duct, locating it as shown.
4. Push the terminal air duct fully in until the fixing brackets contact the wall face.
5. Ensure that the duct is level and make good between the wall and duct, from OUTSIDE of the building.
6. From OUTSIDE of the building, seal the air duct join (A) with the mastic provided.
7. From OUTSIDE of the building, pass the terminal flue duct through the wall opening and slide it into the boiler flue duct. Locate it as shown and fix it in position with the 4 screws previously removed.
8. From OUTSIDE of the building seal the flue duct join (B) with the mastic provided.
9. Fasten the terminal grille to the duct assembly.

9 FITTING THE FLUE ASSEMBLY - Duct lengths up to 400 mm (16") - RS 3/75P & RS 3/100P

Flue terminal assembly

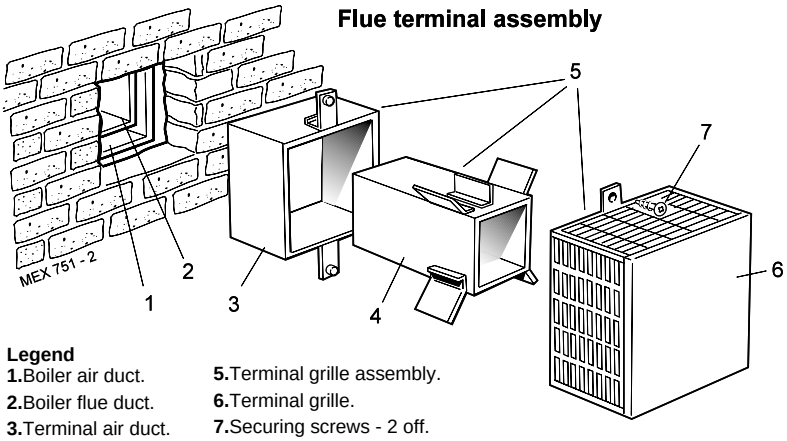

Legend
1.Boiler air duct.
2.Boiler flue duct.
3.Terminal air duct.
4.Terminal flue duct.
5.Terminal grille assembly.
6.Terminal grille.
7.Securing screws - 2 off.
8.Splitter plate.

A. Air duct join
B. Flue duct join

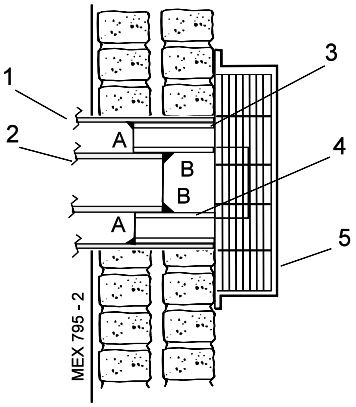

Flue terminal shown in position

1. Remove the 2 screws and separate the terminal grille, terminal air duct and terminal flue duct.
2. From OUTSIDE of the building, pass the terminal air duct through the wall opening and slide it into the extension air duct, locating it as shown.
3. Push the duct fully in until the fixing brackets contact the wall face.
4. Ensure that the duct is level and make good between the wall and the duct from OUTSIDE of the building.
5. From OUTSIDE the building, seal the duct join (A) with the mastic provided.
6. From OUTSIDE the building, pass the terminal flue duct through the wall opening and slide it into the boiler flue duct pushing the flue duct fully in, up to the locating stops. Locate it as shown.
7. From OUTSIDE of the building, seal the duct join (B) with the mastic provided.
8. Fasten the terminal grille to the duct assembly.

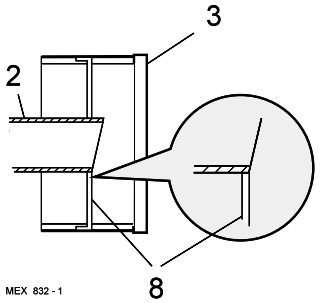

10 EXTENSION DUCTS - Duct lengths greater than 400 mm (16")

Extension ducts shown fitted

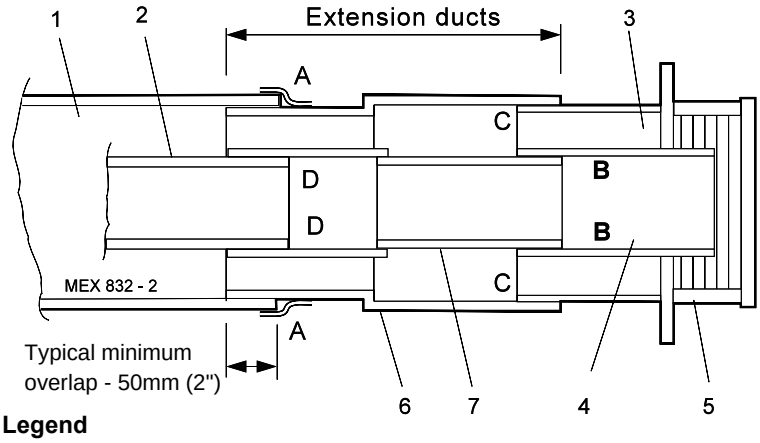

Legend

1. Boiler air duct
2. Boiler flue duct
3. Terminal air duct
4. Terminal flue duct
5. Terminal grille
6. Extension air duct
7. Extension flue duct

A. Air duct join
B. Flue duct join
C. Terminal air duct join
D. Terminal flue duct join

1. BEFORE PLACING THE BOILER IN POSITION, loosely fit the extension air duct and terminal assembly to the boiler air duct and adjust to the required overall duct length.

   Note.
   Ensure that any of the duct overlaps are not less than 50 mm (2").

2. Secure the extension air duct in position, using the adhesive tape provided, at join (A). Ensure that a good seal is made, particularly at the 2 bottom corners where the boiler duct is flanged .
3. Remove the terminal assembly.
4. Place the boiler in position, entering the extension duct into the wall opening.
5. Make good the brickwork around the air duct inside.
6. Separate the terminal grille, terminal air duct and terminal flue duct. Refer to Frame 8 or 9.
7. From OUTSIDE of the building, pass the terminal air duct through the wall opening and slide it into the extension air duct, locating it as shown.
8. Push the duct fully in until the fixing brackets contact the wall face.
9. Ensure that the duct is level and make good between the wall and the duct from OUTSIDE of the building.
10. From OUTSIDE of the building, seal the duct join (C) with the mastic provided
11. From OUTSIDE of the building, slide the extension flue duct into the boiler flue duct to the same distance as the extension air duct. Seal the duct join (D) with the mastic provided
12. **RS 3/60P**
    Go to Frame 8 note. 7

    RS 3/75P & 3/100P
    Go to Frame 9 note. 6

11 GAS CONNECTION

1. A MINIMUM working gas pressure of 37 mbar (14.8 in.w.g.) MUST be available at the boiler inlet, with the boiler operating.
2. Extend a gas supply pipe NOT LESS THAN 15mm (1/2") OD to the boiler and connect to the gas cock situated at the front LH side of the boiler.
3. Test the gas installation for soundness and purge in accordance with BS.6891: 1988. Refer to Frame 24.

Boiler	Dimension A
RS 3/60P & RS 75P	400 (15 3/4")
RS 3/100P	473 (10 5/8")

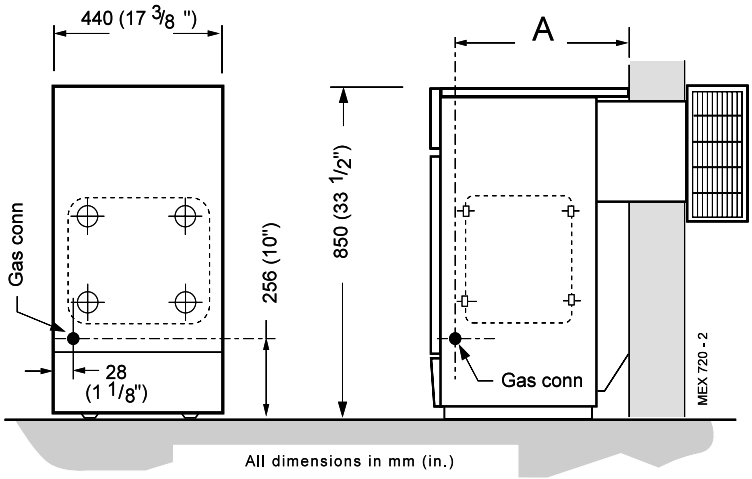

12 WATER CONNECTIONS

1. Connect the system flow and return pipework to the boiler as appropriate. Refer to Frames 13 and 14 for guidance on system design.

   Note. *When the required output exceeds 14.4 kW (49 000 Btu/h) then 28mm (1") pumped flow and return pipes should be used, both to and from the boiler.*

   Gravity connections MUST be at least 28mm (1").

2. Ensure that all valves are open. Fill and vent the system and check for water soundness.

   Notes.

   a. *Isolating valves must be fitted as close to the pump as possible.*

   b. *The boiler is not suitable for use with a direct hot water cylinder or a sealed system.*

13 MINIMUM REQUIREMENTS Fully pumped systems

1. Open vent and cold feed connections must be made to the boiler flow and return tappings according to the options shown in Frame 6.
2. The boiler is assumed to be the highest point of the circulating system.
3. The circulating pump is positioned on the FLOW and the vertical distance, between the pump and feed/ expansion tank, must comply with the pump manufacturer's minimum requirements, to avoid cavitation. Should these conditions not apply, either lower the pump position or raise the feed/ expansion tank above the minimum requirements of **Caradon Plumbing Ltd.**
4. The water velocity through the boiler flow / return pipes is assumed to be below 1 m/s (3 ft./s), whilst the pump flow rate is set to provide a temperature difference of 11 °C (20 °F) across the boiler flow / return, at design input.
5. This information is intended as a GUIDE ONLY and cannot take into account instantaneous changes in head caused by the operation of motorised valves, pumps etc.

   Due allowance MUST be made if surging is liable to occur.

   If in any doubt, contact **Caradon Plumbing Ltd.**

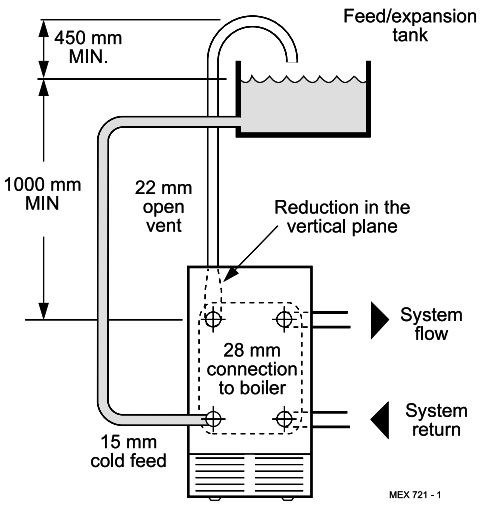

14 GRAVITY HOT WATER & PUMPED CENTRAL HEATING

1. Separate flow and return connections are used for each service. All possible configurations are given in Frame 6 and *ONLY those shown should be used.*
2. The schematic pipework graph is based on the assumption that NO MORE than 8 elbows are used in the gravity loop, including entry to the boiler.
3. For each extra elbow in excess of 8 (R) MUST be reduced by 300 mm (12") or (H) increased by 100 mm (4")
4. Whatever value is selected for (R), the value of (H) MUST be at least that indicated by the graph.

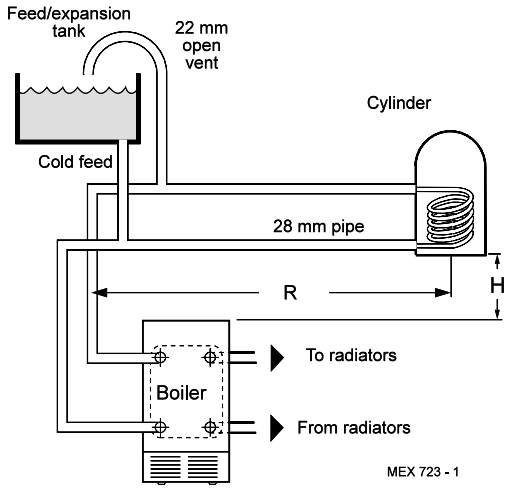

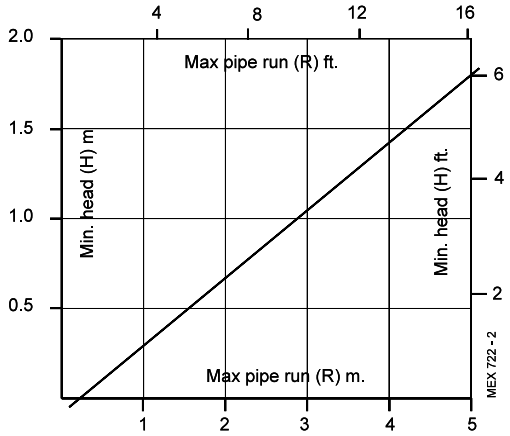

(R) = *the horizontal distance between the centre line of the cylinder and the boiler tappings used - measured along the pipe run.*

(H) = *the vertical distance between the top of the boiler and the base of the cylinder.*

Notes.

a. *Flow and return pipes should rise vertically on leaving the boiler.*

b. *Horizontal pipes should be ABOVE ceiling level and as short as possible.*

c. *A MINIMUM inclination of 25 mm per 3 m run (1" per 10') is required to avoid air locks.*

If the above conditions cannot be met pumped primaries should be used.

15 ELECTRICAL CONNECTIONS

WARNING

The appliance MUST be efficiently earthed.

A mains supply of 230 V ~ 50 Hz . Fuse should be 3A.

All external controls and wiring MUST be suitable for mains voltage.

Wiring should be in 3-core PVC insulated cable NOT LESS than 0.75 mm^2 (24 x 0.2 mm) to BS.6500, Table 16.

Wiring external to the boiler MUST be in accordance with current I.E.E. (BS7671) Wiring Regulations and local regulations.

Connection must be made in a way that allows complete isolation of the electrical supply - such as a double pole switch, having a 3mm (1/8") contact separation in both poles, or a plug and socket serving only the boiler and system controls.

The means of isolation must be accessible to the user after installation.

This connection should be readily accessible and be made adjacent to the boiler (except in the case of bathroom installations for domestic boilers where the point of connection to the mains MUST be outside of the bathroom.)

16 INTERNAL WIRING

Flow and pictorial wiring diagrams are shown in Frames 17 and 18. A schematic wiring diagram is included in the Lighting Instruction label.

1. Remove the securing screw and lift off the control box cover.
2. Route the electrical leads into the box and wire into the terminal strip, as shown.

Notes.

a. Secure each lead with one of the cable clamps.

b. The mains lead connection MUST be made so that, should the lead slip from its anchorage, the current conductors become taut before the earthing conductor.

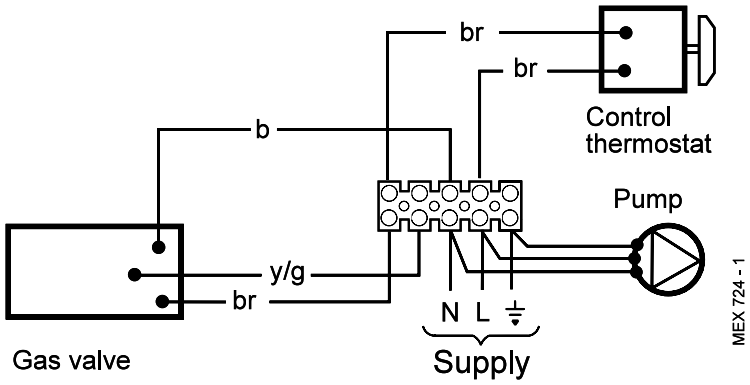

17 EXTERNAL CONTROLS

External wiring must be in accordance with the current I.E.E. (BS 7671) Wiring Regulations.

The wiring diagrams illustrated in Frames 19-21 cover the systems most likely to be fitted to this appliance.

For wiring external controls to the Mexico Super 3 RS boiler reference should be made to the system wiring diagrams supplied by the relevant manufacturer, in conjunction with the flow wiring diagram below and also Frame 18.

Difficulty in wiring should not arise, providing the following directions are observed:

1. Controls that switch the system ON and OFF, e.g. a time switch, MUST be wired, in series, in the live mains lead to the boiler.
2. Controls that override an on/off control, e.g. a frost thermostat, MUST be wired into the mains lead, in parallel, with the control(s) to be overridden. Refer to Frame 22.
3. If a proprietary system is used, follow the instructions supplied by the manufacturer.

Advice on required modifications to the wiring may be obtained from the component manufacturers.

Note. *If there are no external controls the circulating pump MUST be wired into the control box.*

Flow wiring diagram

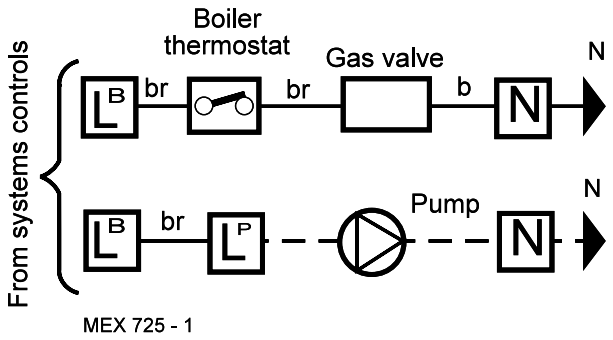

18 PICTORIAL WIRING

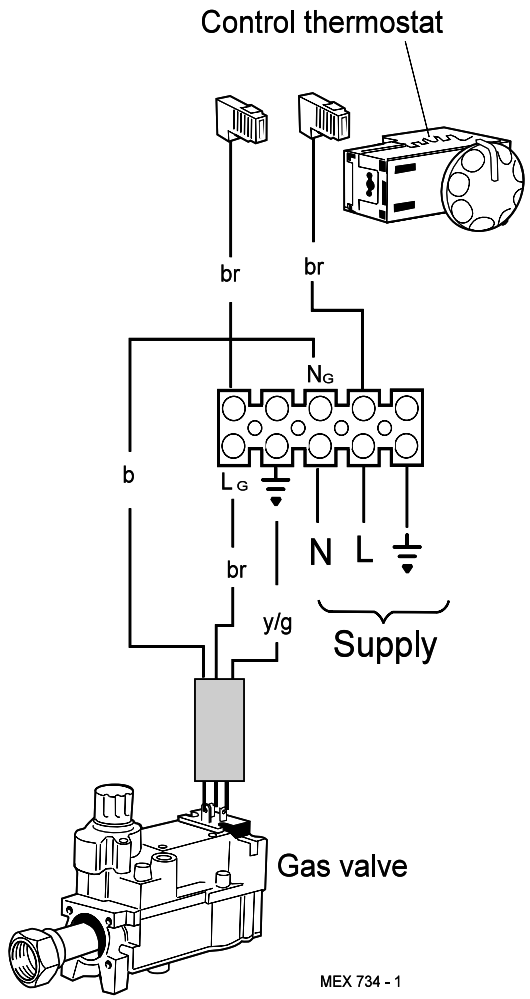

LEGEND

b blue **br** brown **y/g** yellow/green

19 MID POSITION VALVE **Pumped only**

Notes.

1. *Some earth wires are omitted for clarity. Ensure proper earth continuity when wiring.*
2. *Numbering of terminals on thermostats is specific to the manufacturer indicated.*
3. *This is a fully controlled system - set the boiler thermostat to maximum.*
4. *'Switchmaster Midi' is similar in operation but the wiring differs slightly; see manufacturer's literature.*

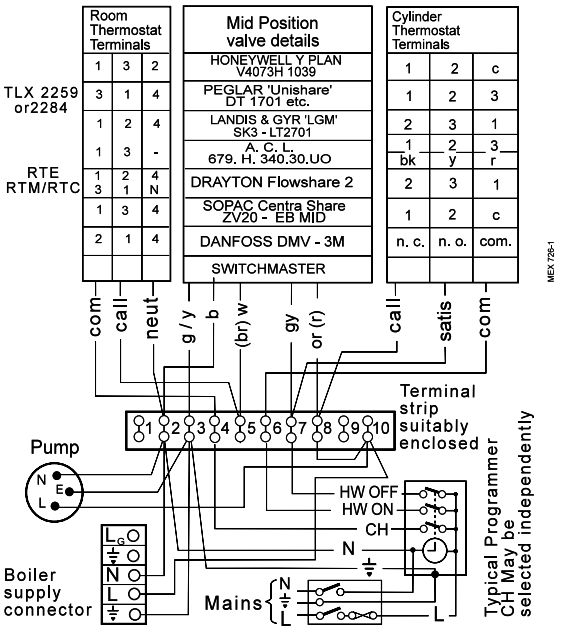

LEGEND

b	blue	**br**	brown	**w**	white
bk	black	**r**	red	**gy**	grey
		or	orange	**y/g**	yellow/green

20 TWO SPRING CLOSED VALVES **Pumped only**

Notes.

1. *Some earth wires are omitted for clarity. Ensure proper earth continuity when wiring.*
2. *Numbering of terminals on thermostats is specific to the manufacturer.*
3. *This is a fully controlled system - set the boiler thermostat to maximum.*
4. *'Switchmaster Autozone' has grey and orange auxiliary switch leads but the ORANGE (NOT the grey) wire must be connected to the incoming live supply.*

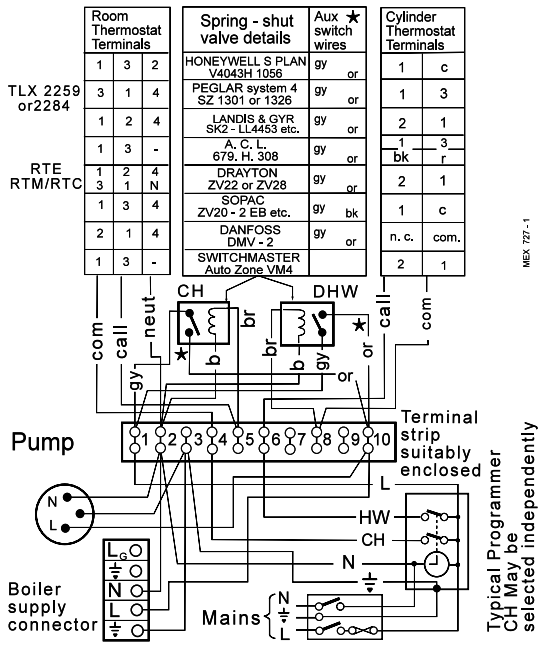

LEGEND

b	blue	**br**	brown	**or**	orange
bk	black	**r**	red	**g/y**	green/yellow
		w	white	**gy**	grey

21 HONEYWELL 'C' PLAN **Gravity HW & Pumped CH**

Notes.

1. *Some earth wires are omitted for clarity. Ensure proper earth continuity when wiring*
2. *Numbering of terminals on thermostats is specific to the manufacturer.*

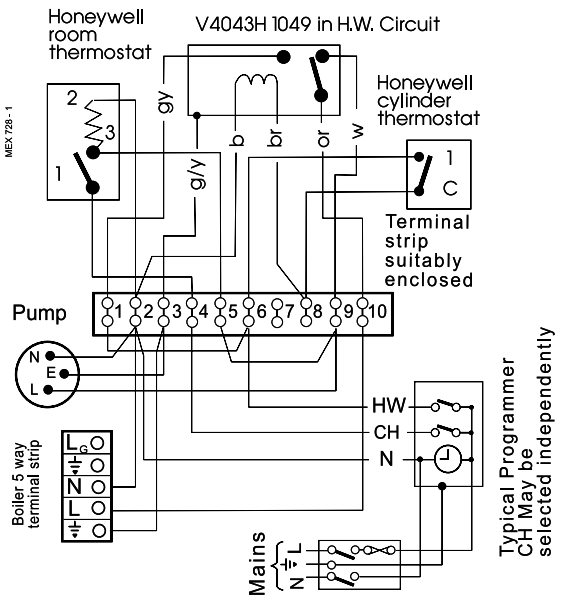

LEGEND

w	white	**bk**	black	**b**	blue
r	red	**br**	brown	**gy**	grey
		or	orange	**g/y**	green/yellow

22 FROST PROTECTION

Central heating systems fitted wholly inside the house do not normally require frost protection as the house acts as a 'storage heater' and can normally be left at least 24 hrs. without frost damage. However, if parts of the pipework run outside the house or if the boiler will be left off for more than a day or so then a frost 'stat should be wired into the system.

This is usually done at the programmer, in which case the programme selector switches are set to OFF and all other controls MUST be left in the running position.

The frost 'stat should be sited in a cold place but where it can sense heat from the system.

Wiring should be as shown, with minimal disturbance to other wiring of the programmer.

Designation of the terminals will vary, but the programmer and thermostat manufacturer's leaflets will give full details.

Diagram A shows a double pole frost thermostat, which should suffice for all systems which do not use the OFF terminals of the programmer.

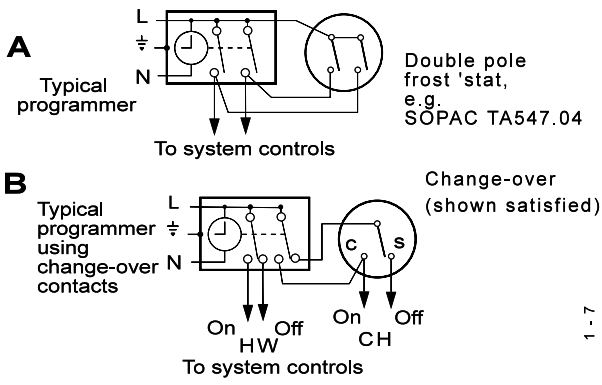

Diagram B shows a 'change-over' frost thermostat, which will cover most systems which do use CH OFF. If, however, on such a system the HW pipework is in an isolated part of the house, a second frost thermostat may be used to protect it.

If in doubt, ask your installer for advice.

23 FITTING THE CASING

1. Offer up the RH side panel, locating it with the peg in the baseplate, and push the panel back.
2. Secure the panel to the baseplate and collector hood.
3. Repeat steps 1 and 2 to refit the LH side panel.
4. Place the top panel and push back.
5. Secure the top panel to the side panels.

IMPORTANT. Wiring within the boiler casing must be neartly secured with the cable straps provided and MUST NOT be allowed to touch the burner front plate, or the cleanout cover and the collector hood.

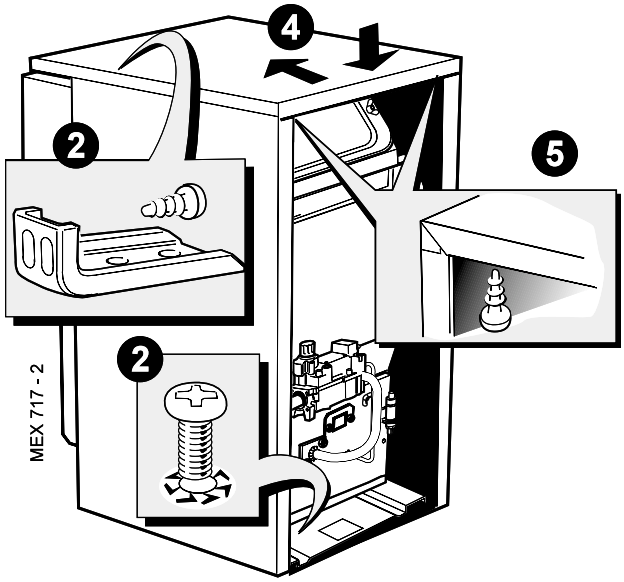

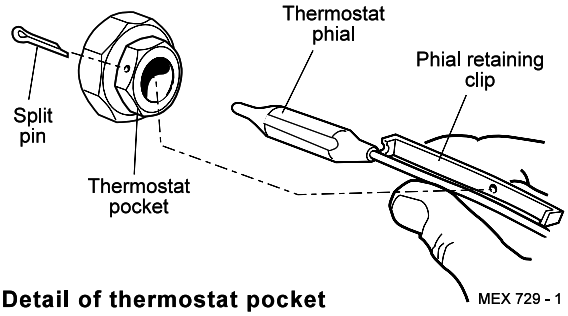

Detail of thermostat pocket

6. Replace the control box cover and refit the control panel using the screws previously removed.
7. Insert the thermostat phial and phial retaining clip into the thermostat pocket. Take care not to kink the thermostat capillary as it is unwound and secure it with the split pin as shown.
8. Refit the grille assembly

24 COMMISSIONING AND TESTING

A. ELECTRICAL INSTALLATION

1. Checks to ensure electrical safety should be carried out by a competent person.
2. ALWAYS carry out preliminary electrical system checks, i.e. earth continuity, polarity, resistance to earth and short circuit using a suitable test meter.

B. GAS INSTALLATION

1. The whole of the gas installation, including the meter, MUST be inspected and tested for soundness, and purged in accordance with the recommendations of BS. 6891.
2. Purging air from the gas installation may be expedited by loosening the union on the gas service cock on the boiler and purging until gas is detected.
3. Retighten the union and check for gas soundness.

WARNING. Whilst effecting the required gas soundness test and purging air from the gas installation, open all windows and doors, extinguish naked lights and **DO NOT SMOKE.**

25 INITIAL LIGHTING

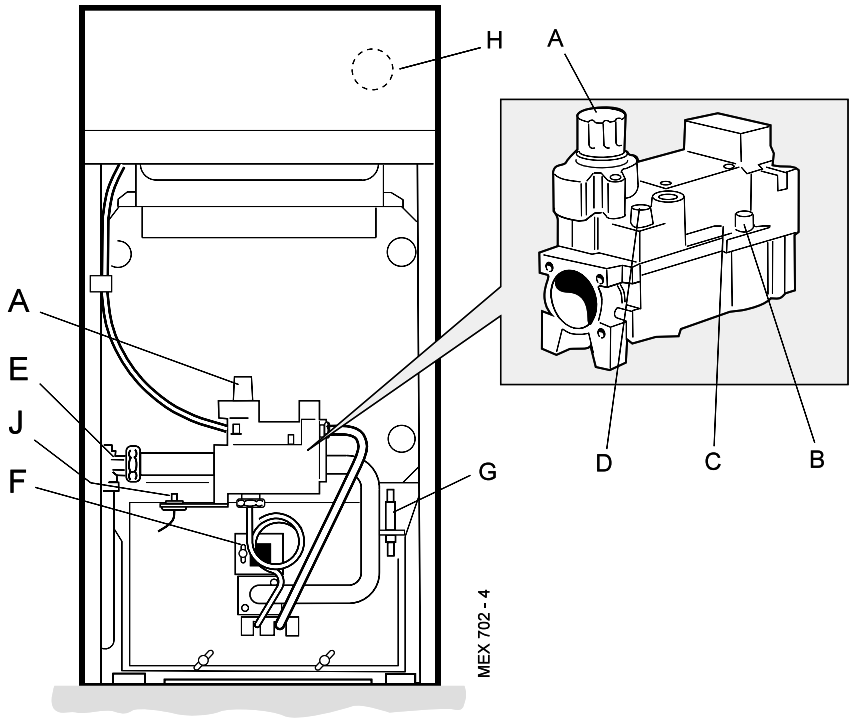

LEGEND

- **A** Gas control knob
- **B** Burner pressure test point
- **C** Main burner pressure adjuster
- **D** Inlet pressure test point
- **E** Gas service cock
- **F** Sightglass
- **G** Piezo unit ignition
- **H** Boiler thermostat knob
- **J** Overheat thermostat reset button (optional)

1. Connect the gas valve electrical leads and refit the cover.
2. Check that the gas service cock (E) is ON and that the boiler thermostat control knob (H) is OFF.
3. Loosen the screw in the burner pressure test point (B) and connect a gas pressure gauge via a flexible tube.
4. Turn the gas control knob (A) CLOCKWISE until resistance is felt and then release it.
5. Push in and retain fully depressed the gas control knob (A). Press and release the piezo unit button (G) repeatedly until the pilot is seen to light through the sightglass (F).
6. Hold the gas control knob (A) depressed for 15 seconds after the pilot burner has ignited, then release.

   If the pilot burner fails to remain alight at this stage, repeat the procedure detailed above but wait longer than 15 seconds before releasing the gas control knob (A).
7. Check the appearance of the pilot flame to ensure that it envelops the tip of the thermocouple and is approximately 25mm (1") long. The pilot flame is factory set and no adjustment is possible.
8. Switch the boiler thermostat control knob (H) to position 6 and check that the burner cross-lights smoothly from the pilot flame.
9. Test for gas soundness around the boiler gas component joints, using leak detection fluid.
10. Operate the boiler for 10 minutes to stabilise the burner temperature. The boiler is pre-set at the factory to its maximum nominal rating
11. Turn the boiler thermostat knob (H) to OFF.
12. Remove the pressure gauge and tube. Retighten the screw in the pressure test point, ensuring that a gas-tight seal is made.

26 PILOT BURNER CONNECTION GAS SOUNDNESS

1. Turn the gas service cock to OFF and undo the union nut.
2. Remove the 4 wing nuts and withdraw the burner and controls assembly, complete, from the boiler.
3. Invert the burner assembly and reconnect to the gas service cock.
4. Turn the gas service cock to ON.
5. Light the pilot burner. Refer to Frame 25.
6. Test for gas soundness around the pilot burner connection, using leak detection fluid.
7. Turn the gas service cock to OFF and return the burner and controls assembly to the normal working position.

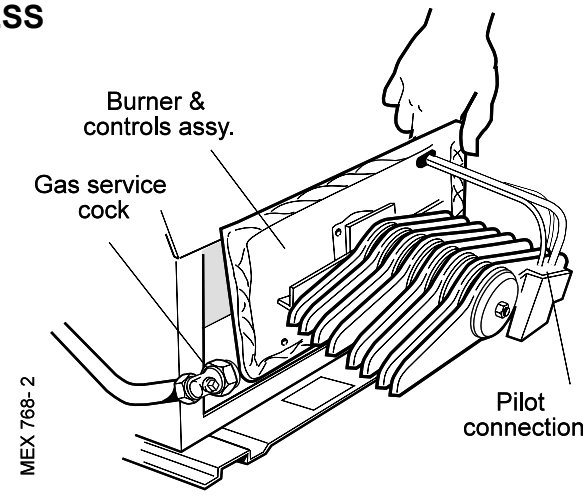

RS 3/60P Burner / controls assembly shown

27 GENERAL CHECKS

Make the following checks for correct operation:

1. Turn the boiler thermostat OFF and ON to check that the main burner is extinguished and relit in response.
2. Check that the programmer, if fitted, and all other system controls function correctly.

   Operate each control separately and check that the main burner or circulating pump (as the case may be) responds.
3. **Flame failure device**

   Check the operation of the flame failure device in the gas control valve as follows:

   a. Extinguish the pilot flame by closing the gas service cock and note the time taken for the flame failure device to shut down - identified by a click within the gas control valve. *This must not be longer than 60 seconds.*

   b. Open the gas service cock and relight the pilot.

   c. Turner the boiler thermostat ON and the burner should light.

   d. Turn the gas control knob to the OFF position. Refer to Frame 25. The main burner and pilot flame should shut down immediately. **Note.** *A latch in the gas control valve provides a safety delay period of approximately 30 seconds before the pilot can be relit.*
4. **Water circulation System**

   a. With the system HOT, examine all water connections for soundness.

   b. With the system still hot, turn off the gas, water and electricity supplies to the boiler and drain down, in order to complete the flushing process.

   c. Refill and vent the system, clear all air locks and again check for water soundness.

   d. Balance the system.
5. Finally, set the controls to the user's requirements, refit the lower front panel and close the controls door.

Notes.

- *If an optional programmer kit is fitted refer to the separate Programmer Kit Installation Instructions and Programmer Kit User's Instructions.*
- *The temperatures quoted below are approximate and vary between installations.*

Thermostat Knob Setting	Flow Temperature °C	°F
2	60	140
3	66	150
4	71	160
5	77	170
6	82	180

28 HANDING OVER

After completing the installation and commissioning of the system the installer should hand over to the householder by the following actions:

1. Hand the User's Instructions to the householder and explain his or her responsibilities under the Gas Safety (Installation and Use) Regulations 1994, Amendments 1996 or rules in force.
2. Draw attention to the lighting instruction label affixed to the inside of the controls door.
3. Explain and demonstrate the lighting and shutting down procedures.
4. The operation of the boiler and the use and adjustment of ALL system controls should be fully explained to the householder, to ensure the greatest possible fuel economy consistent with household requirements of both heating and hot water consumption.

   Advise the User of the precautions necessary to prevent damage to the system and to the building in the event of the system remaining inoperative during frosty conditions.
5. Explain the function and the use of the boiler thermostat and external controls.
6. Explain and demonstrate the function of time and temperature controls, radiator valves etc., for the economic use of the system.
7. If an optional Programmer Kit is fitted then draw attention to the Programmer Kit User's Instructions and hand them to the householder.
8. **After installation, commissioning and customer hand-over instructions please complete the benchmark appliance log book and leave this with the customer.**
9. Stress the importance of regular servicing by a CORGI registered installer and that a comprehensive service should be carried out AT LEAST ONCE A YEAR.
10. Draw attention to the Emergency Action Notice contained in the User's Instructions

29 SCHEDULE

To ensure the continued safe and efficient operation of the appliance it is recommended that it is checked at regular intervals and serviced as necessary. The frequency of servicing will depend upon the installation condition and usage but should be carried out at least annually .

It is the law that any service work must be carried out by a CORGI registered installer.

a. Light the boiler and carry out a pre-service check, noting any operational faults.

b. Clean the main burner.

c. Clean the heat exchanger.

d. Clean the main injectors.

e. Check the condition of the thermocouple.

f. Check that the flue terminal is unobstructed and that the flue system, including the flue cleanout cover, is sealed correctly.

g. If the appliance has been installed in a compartment, check that the ventilation areas are clear.

The servicing procedures are covered more fully in Frames 30 to 35 and MUST be carried out in sequence.

WARNING. Always turn OFF the gas supply at the gas service cock and switch OFF and DISCONNECT the electrical supply to the appliance *BEFORE SERVICING.*

IMPORTANT. After completing the servicing or exchange of components always test for gas soundness and carry out functional checks as appropriate.

30 BOILER CASING REMOVAL

1. Lift off the door.

2. Remove the 2 screws and lift off the grille assembly.

3. Remove the gas valve electrical cover and disconnect the electrical leads.

4. Release the gas valve lead from the retaining clip.

5. Remove the thermostat phial from the pocket as shown.

6. Remove the 2 screws securing the control panel and pull down to release the tabs from under the top panel.

7. If the boiler is not fitted under a worktop, access for flue cleaning will be improved by removing the top panel.

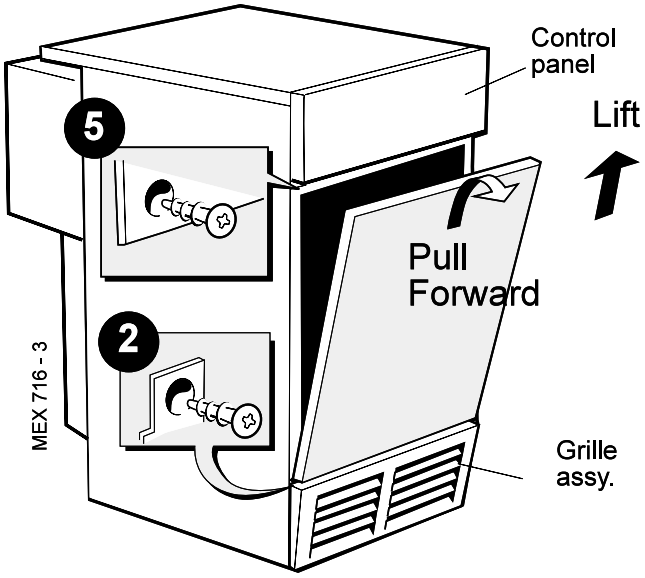

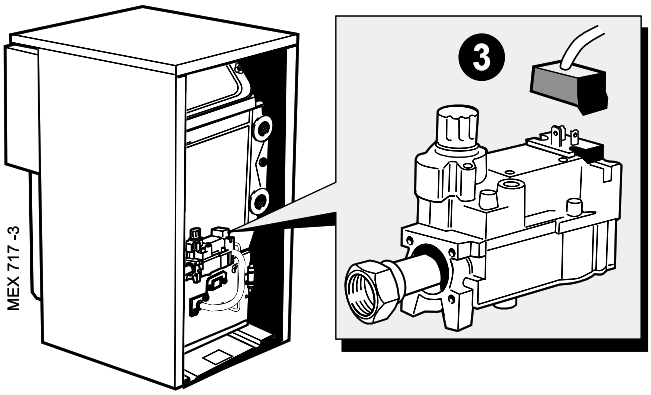

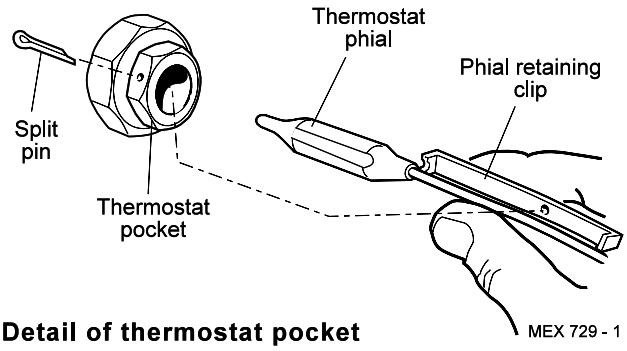

Detail of thermostat pocket

31 BURNER AND CONTROLS ASSEMBLY REMOVAL

1. Lift off front panel and remove the grille assembly - refer to Frame 30. Undo the gas cock union.
2. Remove the 4 wing nuts and withdraw the burner and controls assembly, complete, from the boiler.
3. Place on a convenient working surface.

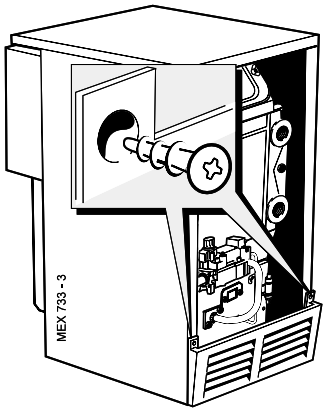

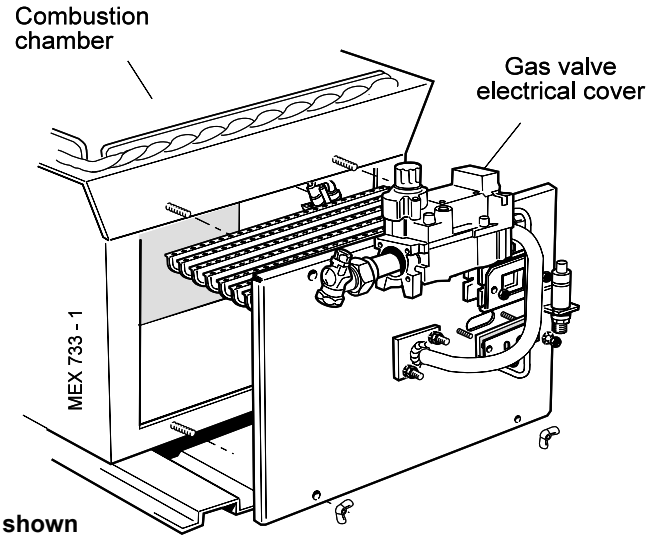

RS 3/60P shown

32 CLEANING THE BURNER ASSEMBLY

1. Brush off any deposits that may have fallen onto the burner head (ensuring that the flame ports are unobstructed) and remove any debris that may have collected.

   Note. *Brushes with metallic bristles MUST NOT be used.*
2. Remove the main burner injector .Check, clean or replace, as required.
3. Refit the injector, using an approved jointing compound.
4. Inspect the pilot burner, thermocouple and spark electrode; ensure they are clear and in good condition.

   Check that:
   - **a.** The pilot burner is clean and unobstructed.
   - **b.** The spark electrode is clean and undamaged.
   - **c.** The spark lead is in good condition and securely connected.
   - **d.** The spark gap is correct. Refer to Frames 45 & 46.
   - **e.** The thermocouple tip is not burned or cracked.
   - **f.** The position of the thermocouple relative to the pilot burner is correct. Refer to Frames 45 & 46.
   - **g.** The thermocouple terminal at the gas valve is clean.
5. Clean or renew components as necessary.

33 CLEANING THE FLUEWAYS

1. Remove the 2 wing nuts and lift off the cleanout cover.
2. Remove all loose deposits from the heat exchanger, especially from between the fins, using a suitable brush. Remove all debris from the combustion chamber base
3. Check that the flue outlet duct is unobstructed.

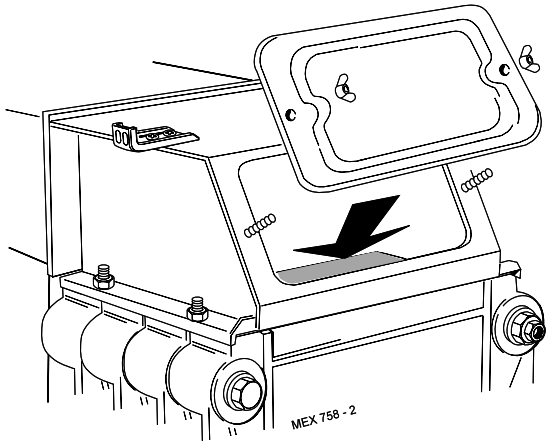

34 RE-ASSEMBLY

Re-assemble the boiler in the following order :

1. Refit the flue cleanout cover, renewing any damaged or deteriorating sealing gasket.
2. Refit the casing top panel.
3. Reconnect the electrical wiring and refit the controls panel, ensuring that the thermostat phial and phial retaining clip is correctly located in the thermostat pocket and secured by the split pin. Refer to Frame 30.
4. Check the sightglass in the front plate - clean or renew as necessary.
5. Renew any damaged or deteriorating front plate gasket.
6. Refit the burner and controls assembly.
7. Reconnect the gas service cock.
8. Refit the grille assembly.

35 GAS PRESSURE ADJUSTMENT

1. **Pilot Pressure**

   Pilot adjustment is factory set to maximum and no adjustment is possible.

2. **Main Burner Pressure**

   After servicing, reference should be made to Table 1, which quotes details of the rated output with the related burner pressure and heat input.

   NB *The burner pressure is not adjustable. If the burner pressure is incorrect check the supply pressure and all isolating valves and contact your LPG service centre if necessary.*

   Refit the lower front panel.

REPLACEMENT OF PARTS

36 GENERAL

When replacing any component:

1. Isolate the electricity supply.
2. Turn off the gas supply at the boiler.
3. Remove the lower front panel .

For replacement of pumps or programmer units refer to the separate Pump Kit or Programmer Kit Instructions.

37 SIGHTGLASS REPLACEMENT

1. Unfasten the 2 M5 hexagon nuts and washers. Remove the assembly from the front plate.
2. Fit the new sightglass and re-assemble, as shown.
3. Retighten the two M5 hexagon nuts to ensure an airtight seal. *Do NOT overtighten.*

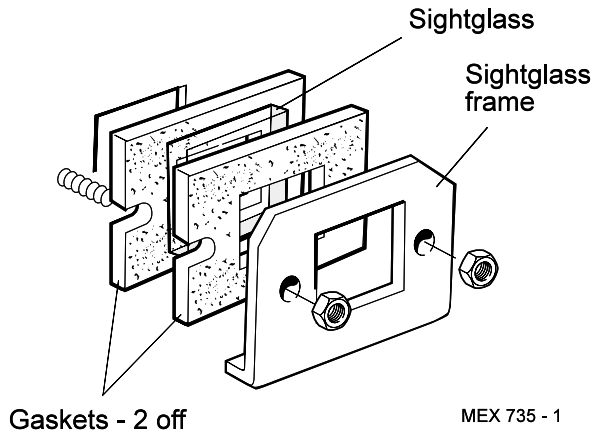

38 PIEZO UNIT REPLACEMENT

1. Disconnect the ignition lead from the piezo unit body.
2. Remove the retaining nut and withdraw the unit, as shown.
3. Fit the new unit and reassemble in reverse order.

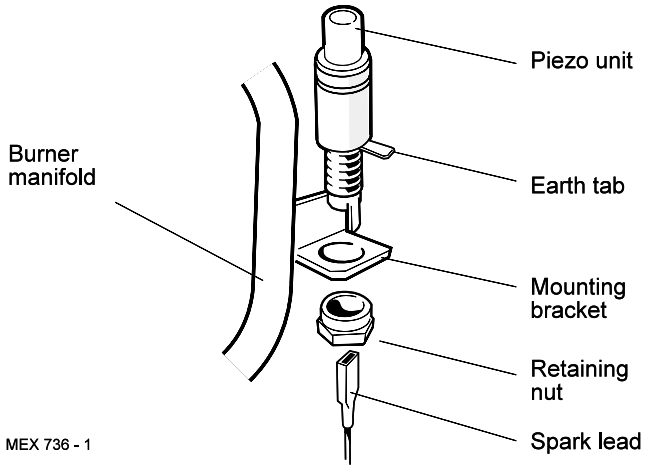

39 PILOT BURNER REPLACEMENT - RS 3/60P & RS 3/75P ONLY

1. Lift off front panel and remove the grille assembly - refer to Frames 30 & 31.
   Undo the gas cock union.
   Remove the burner and controls assembly.
2. Remove the ignition electrode. Refer to Frames 45.
3. Unscrew the thermocouple nut and pull the thermocouple clear.
4. Undo the pilot supply pipe connection and ease clear of the pilot burner. DO NOT lose the pilot injector, which is a push-fit in the pilot burner housing.

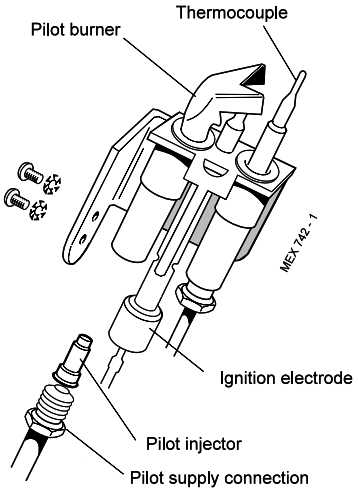

5. Remove the 2 securing screws and washers, and withdraw the pilot burner.
6. Fit the new pilot burner and re-assemble in reverse order, ensuring that:
   a. The injector is in position when refitting the pilot supply.
   b. A gas-tight joint is made.
   c. The spark gap is correct. Refer to Frame 45.

40 PILOT BURNER REPLACEMENT - RS 3/100P ONLY

1. Lift off front panel and remove the grille assembly - refer to Frames 30 & 31.
   Undo the gas cock union.
   Remove the burner and controls assembly.
2. Remove the ignition electrode. Refer to Frame 46.
3. Unscrew the thermocouple connection and pull the thermocouple clear. Refer to Frame 48.
4. Undo the pilot supply pipe connection and ease clear of the pilot burner. DO NOT lose the pilot injector, which is a push-fit in the pilot burner housing.

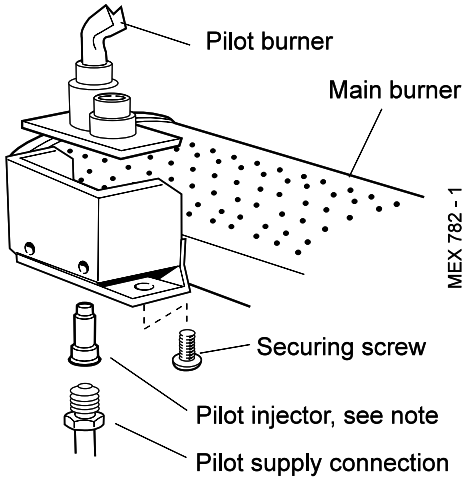

5. Remove the 2 securing screws and washers, and withdraw the pilot burner.
6. Fit the new pilot burner and re-assemble in reverse order, ensuring that:
   a. The injector is in position when refitting the pilot supply.
   b. A gas-tight joint is made.
   c. The spark gap is correct. Refer to Frame 46.

41 CONTROL THERMOSTAT REPLACEMENT

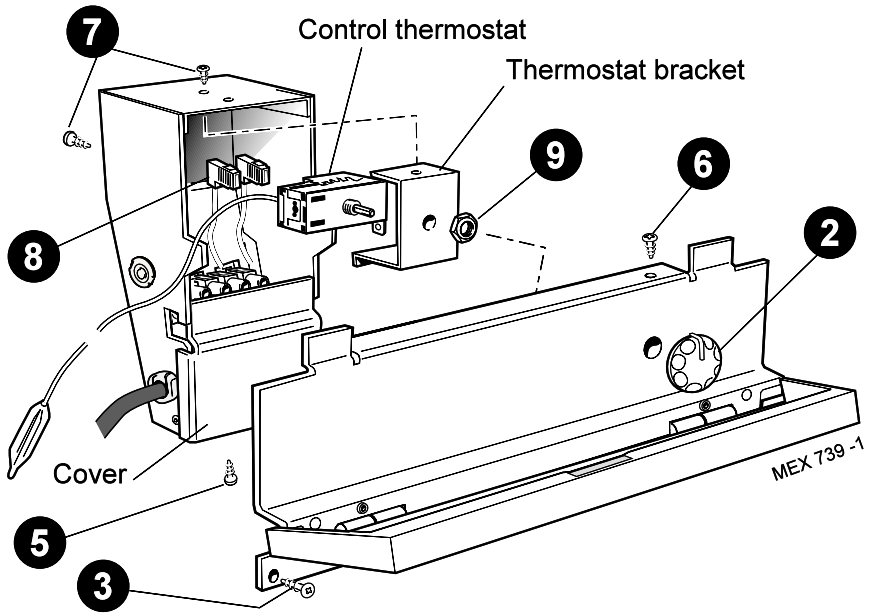

1. Lift off the front door - Refer to Frame 30.
2. Pull off the thermostat knob.
3. Remove the 2 screws and pull down the control panel tabs clear of the top panel.
4. Remove the thermostat phial from the pocket - refer to Frame 30.
5. Remove the bottom self tapper and remove the cover.
6. Remove the top screw and ease the control box off the control panel.
7. Remove the 2 screws to release the thermostat bracket.
8. Disconnect the electrical leads.
9. Unscrew the thermostat nut to withdraw the thermostat.
10. Fit the new thermostat and re-assemble in reverse order.

42 CONTROLS PANEL REPLACEMENT

1. Lift off the lower front panel. Refer Frame 30
2. Pull off the thermostat knob.
3. Disconnect the electrical connections from the gas valve.
4. Unscrew the 2 screws and pull down the control panel so that the 2 tabs clear the top panel.
5. Remove the thermostat phial from the pocket. Refer to Frame 30.
6. Remove the bottom screw and remove the cover from the control box.
7. Remove the top screw and ease the control box off the control panel.
8. Disconnect the mains electrical supply from the terminal strip and release from its clamp.
9. Assemble new control box and panel and fit to the casing reverse order.
10. Insert control thermostat phial into pocket and secure with the split pin.
11. Connect gas valve electrical leads.
12. Remove control box cover and make electrical supply connections to the terminal strip. Refer to frame 17.
13. Replace front lower panel.

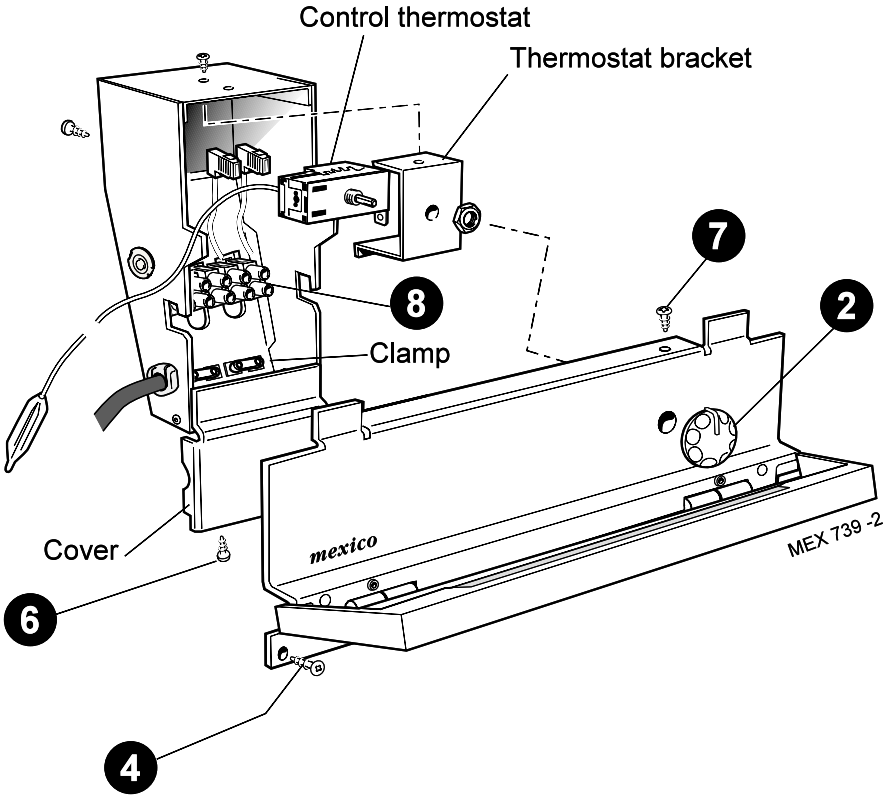

43 OVERHEAT THERMOSTAT REPLACEMENT (if fitted)

1. Lift off front lower panel. Refer to Frame 30.
2. Slacken the screw at the thermostat pocket and withdraw the phial from the pocket.
3. Remove the thermostat backnut.
4. Remove the 2 Eco leads.
5. Fit the new thermostat (lead polarity immaterial), ensuring that the alignment peg on the thermostat sits in the small hole adjacent to the main fixing hole and reassemble in reverse order.
6. Replace the lower front panel.
7. Check the operation of the boiler.

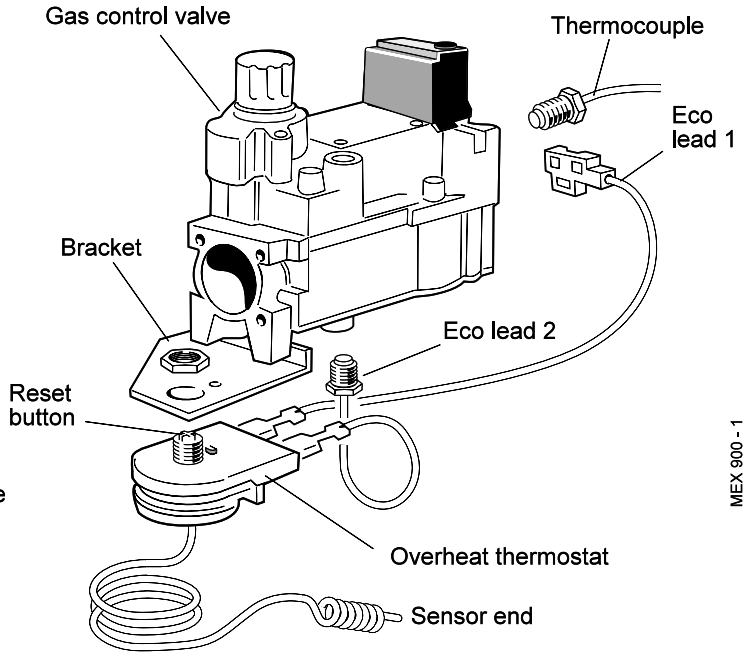

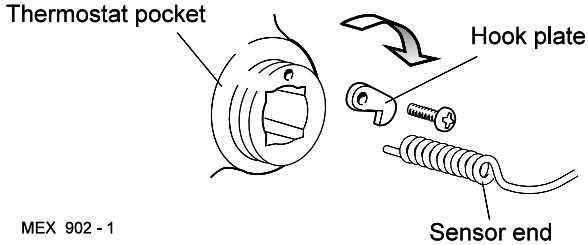

44 IGNITION LEAD REPLACEMENT

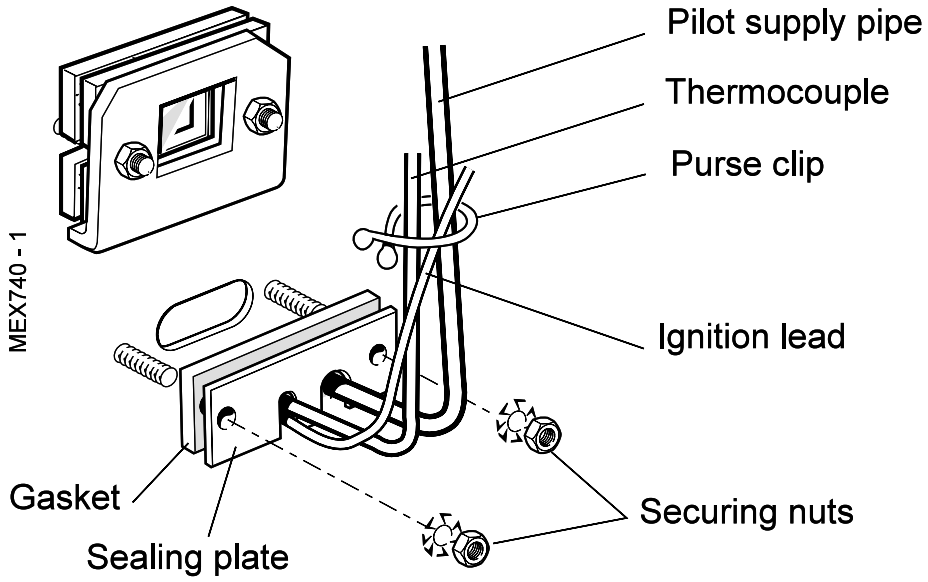

1. Lift off front panel and remove the grille assembly - refer to Frames 30 & 31.
   Undo the gas cock union.
   Remove the burner and controls assembly.
2. Remove the purse clip.
3. Undo the 2 securing nuts and washers. Remove the sealing plate and gasket.
4. Disconnect the spark lead from the base of the electrode and the piezo unit, and withdraw the lead.
5. Fit the new lead and re-assemble in reverse order.

45 IGNITION ELECTRODE REPLACEMENT - RS 3/60P & RS 3/75P ONLY

1. Remove the burner and controls assembly. Refer to Frame 31.
2. Disconnect the ignition lead.
3. Prise the retaining clip out of the groove in the electrode, using a small screwdriver, and withdraw the electrode.
4. Push in the new electrode until the retaining clip locates in the groove and re-assemble in reverse order.

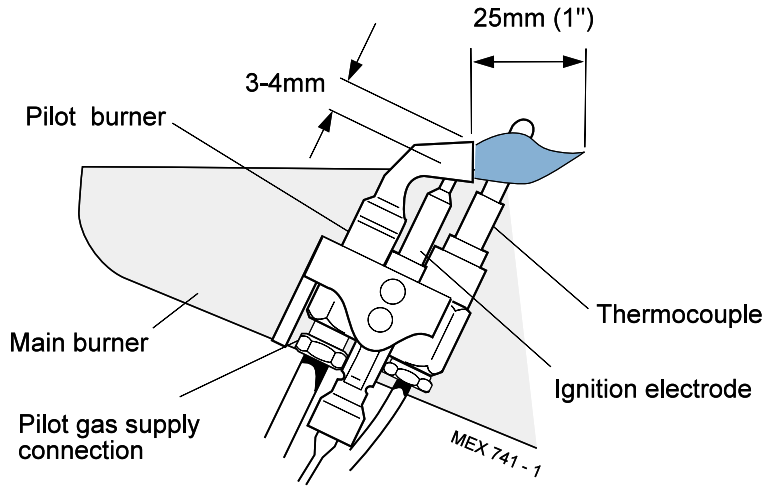

Detail of pilot flame length and spark gap

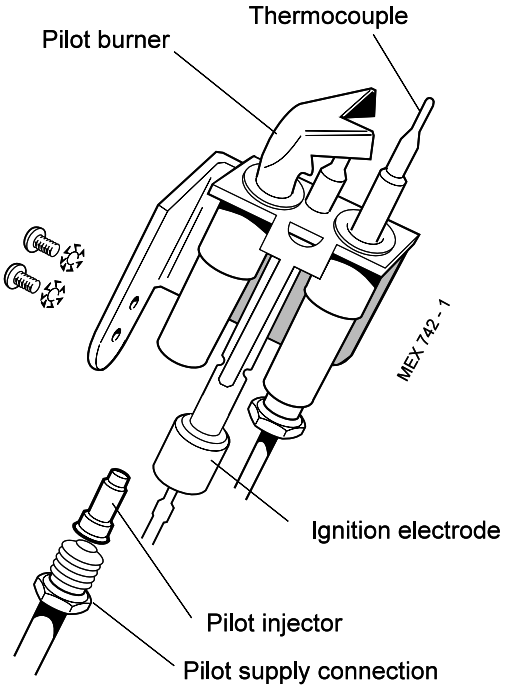

46 IGNITION ELECTRODE REPLACEMENT - RS 3/100P ONLY

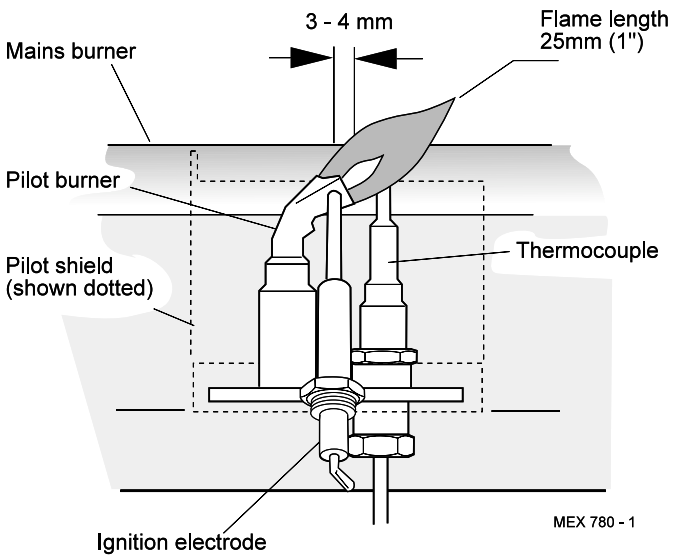

Detail of pilot flame length and spark gap

1. Lift off front panel and remove the grille assembly - refer to Frames 30 & 31. Undo the gas cock union.
   Remove the burner and controls assembly.
2. Disconnect the ignition lead.
3. Remove the electrode retaining nut and withdraw the electrode.
4. Fit the new electrode and re-assemble in reverse order.

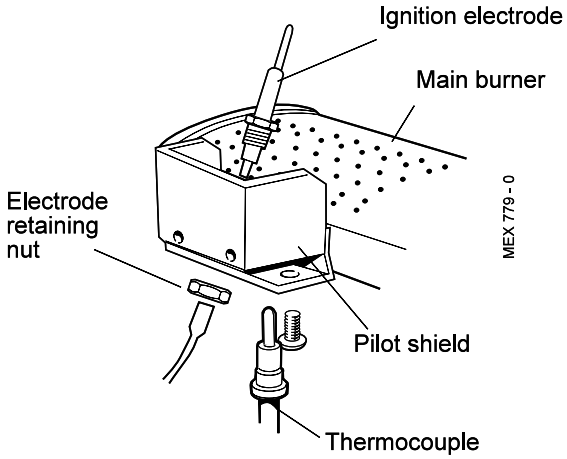

47 THERMOCOUPLE REPLACEMENT - RS 3/60P & RS 3/75P ONLY

1. Lift off front panel and remove the grille assembly - refer to Frames 30 & 31. Undo the gas cock union.
   Remove the burner and controls assembly.
2. Remove the ignition electrode. Refer to Frame 45.
3. Remove the purse clip.
4. Undo the thermocouple nut at the pilot burner and pull the thermocouple clear.
5. Undo the thermocouple connection at the gas valve.
6. Remove the sealing plate and gasket (refer to Frame 44) and withdraw the thermocouple.
7. Fit the new thermocouple and re-assemble in reverse order.

Note.
Avoid sharp bends in the thermocouple lead and ensure that it follows the same route as previously.

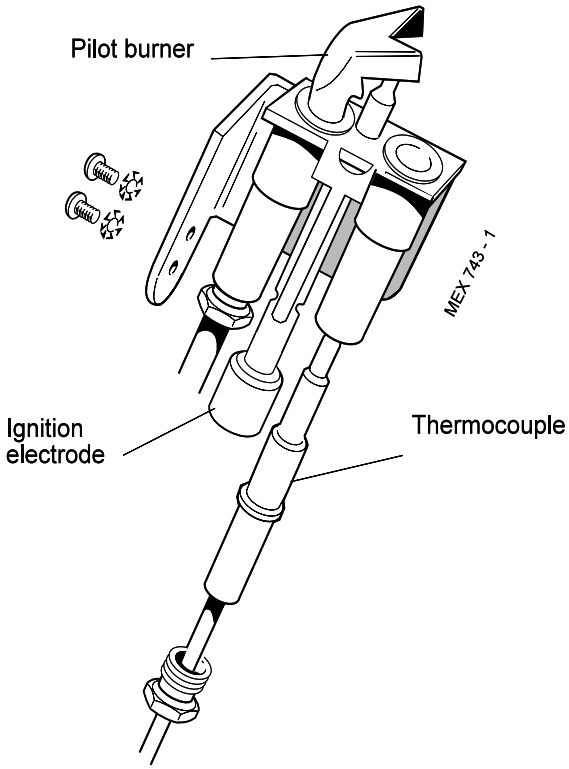

48 THERMOCOUPLE REPLACEMENT - RS 3/100P ONLY

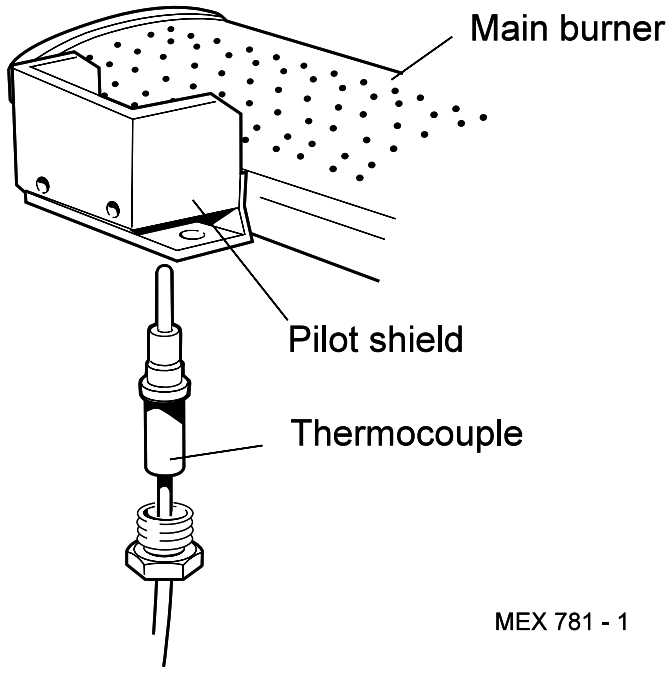

1. Lift off front panel and remove the grille assembly - refer to Frames 30 & 31. Undo the gas cock union.
   Remove the burner and controls assembly.
2. Remove the spark electrode. Refer to Frame 46.
3. Remove the purse clip.
4. Undo the thermocouple connection at the pilot burner and pull the thermocouple clear.
5. Undo the thermocouple connection at the gas valve.
6. Remove the sealing plate and gasket (refer to Frame 44) and withdraw the thermocouple.
7. Fit the new thermocouple and re-assemble in reverse order.

Note.
Avoid sharp bends in the thermocouple lead and ensure that it follows the same route as previously.

49 MAIN BURNER REPLACEMENT - RS 3/60P & RS 3/75P ONLY

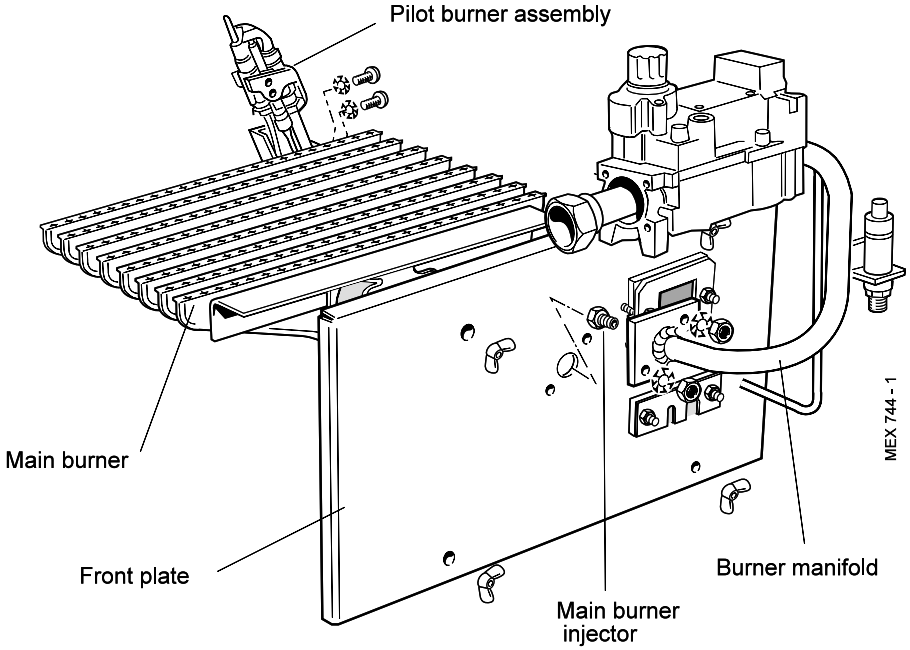

1. Lift off front panel and remove the grille assembly - refer to Frames 30 & 31. Undo the gas cock union. Remove the burner and controls assembly.
2. Remove the 2 screws securing the pilot burner and pull the assembly clear of the main burner.
3. Remove the 2 nuts and washers securing the burner to the front plate and manifold. Withdraw the burner.
4. Fit the new burner and re-assemble in reverse order, taking care not to damage the main burner injector which is screwed into the burner manifold.

50 MAIN BURNER REPLACEMENT - RS 3/100P ONLY

1. Lift off front panel and remove the grille assembly - refer to Frames 30 & 31. Undo the gas cock union. Remove the burner and controls assembly.
2. Remove the 2 nuts and washers securing the bottom burner baffle and remove the baffle.
3. Remove the 2 screws securing the pilot burner and pull the assembly clear of the main burner.
4. Remove the 2 nuts and washers securing the burner to the front plate and manifold. Withdraw the burner.
5. Fit the new burner and re-assemble in reverse order, taking care not to damage the main burner injector which is screwed into the burner manifold.

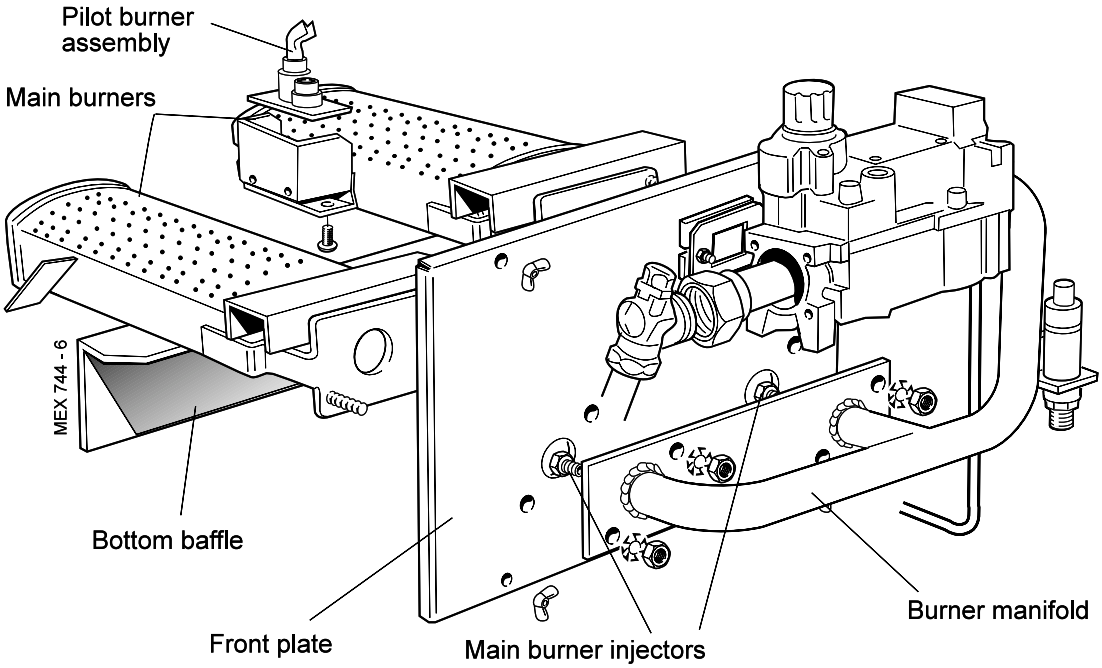

51 MAIN BURNER INJECTOR REPLACEMENT - RS 3/60P & RS 3/75P ONLY

1. Lift off front panel and remove the grille assembly - refer to Frames 30 & 31. Undo the gas cock union. Unscrew the 4 wing nuts and remove the burner and controls assembly from the boiler.
2. Remove the 2 screws securing the pilot burner and pull the assembly clear of the main burner.
3. Undo the manifold securing nuts and remove the manifold from the front plate.
4. Unscrew the burner injector from the manifold.
5. Fit the new injector, using an approved jointing compound, and re-assemble in reverse order.

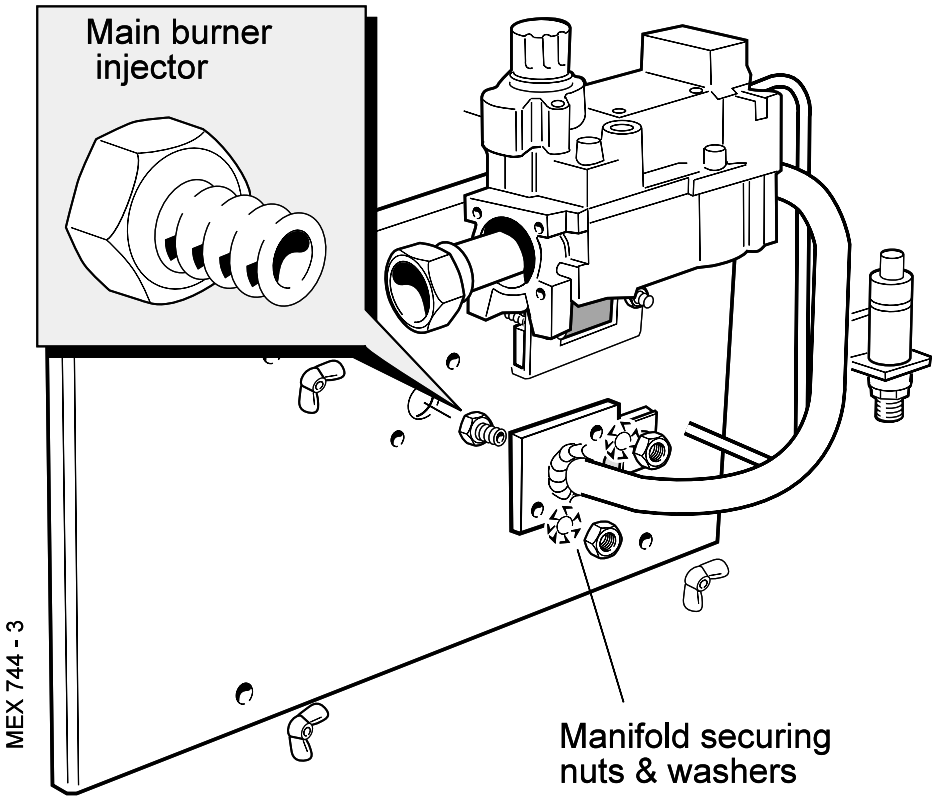

52 MAIN BURNER INJECTOR REPLACEMENT - RS 3/100P ONLY

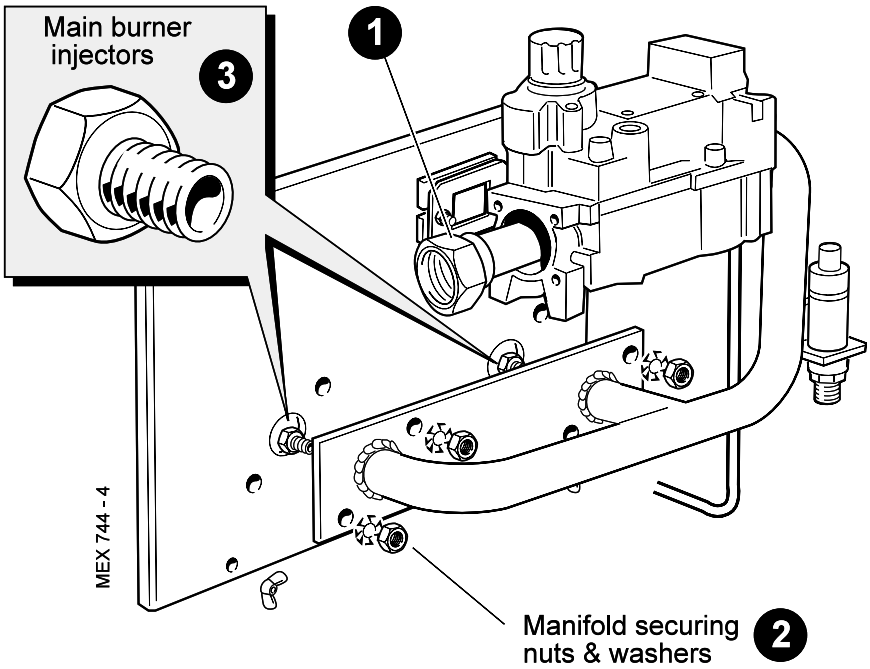

1. Lift off front panel and remove the grille assembly - refer to Frames 30 & 31. Undo the gas cock union. Unscrew the 4 wing nuts and remove the burner and controls assembly from the boiler.
2. Remove the 2 screws securing the pilot burner and pull the assembly clear of the main burner.
3. Undo the manifold securing nuts and remove the manifold from the front plate.
4. Unscrew the burner injector from the manifold.
5. Fit the new injector, using an approved jointing compound, and re-assemble in reverse order.

53 GAS VALVE REPLACEMENT

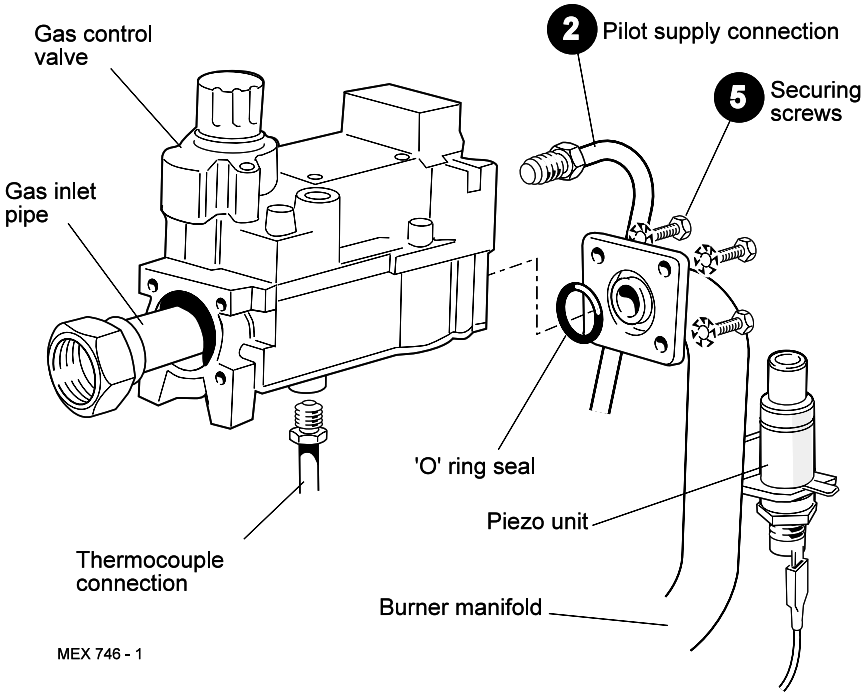

1. Lift off front panel and remove the grille assembly - refer to Frames 30 & 31.
   Undo the gas cock union.
   Unscrew the 4 wing nuts and remove the burner and controls assembly from the boiler.
2. Undo the pilot supply connection.
3. Undo the thermocouple connection.
4. Unscrew the gas inlet pipe from the valve.
5. Remove the 4 securing screws and withdraw the valve from the burner manifold.
6. Fit the new gas valve, ensuring that:
   - **a.** The valve is fitted the correct way round - an arrow engraved on the valve indicates the direction of flow.
   - **b.** The sealing 'O' ring supplied with the valve is correctly fitted at the outlet flange.
   - **c.** An approved jointing compound is used when reconnecting the gas inlet pipe.

FAULT FINDING

Before attempting any electrical fault finding ALWAYS carry out preliminary electrical system checks, i.e. earth continuity, polarity and resistance to earth using a suitable meter.

Detailed instructions on the cleaning and adjustment or replacement of faulty components are contained in the 'Servicing' section of this publication.

54 PILOT WILL NOT LIGHT

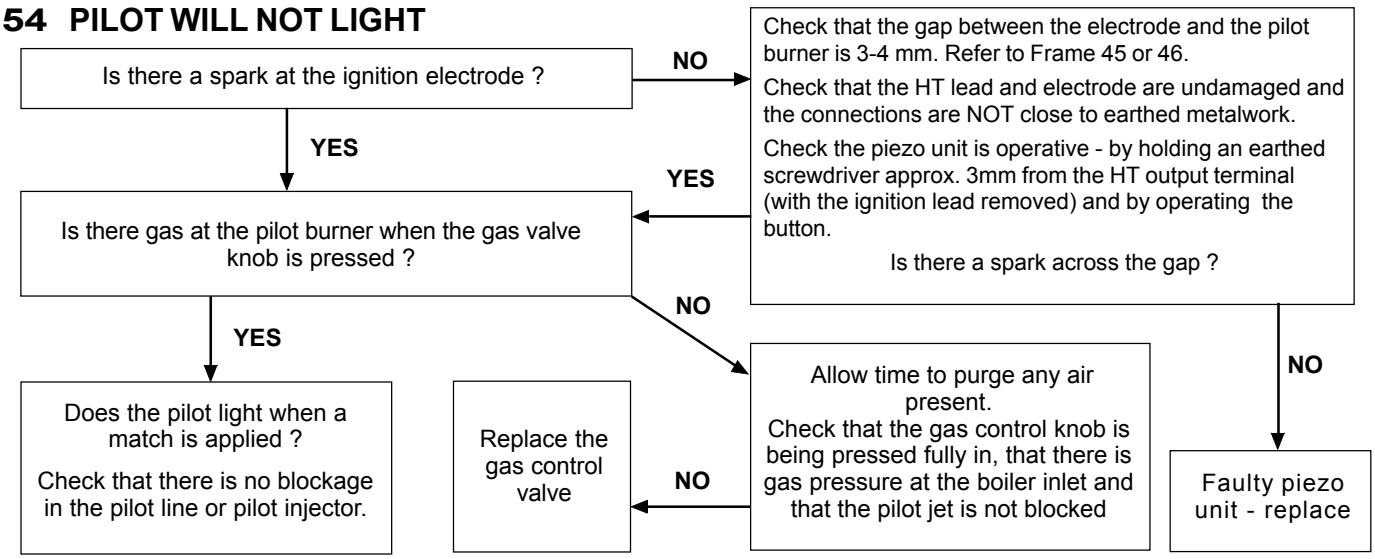

55 PILOT WILL NOT STAY LIT WHEN THE GAS CONTROL VALVE KNOB IS RELEASED

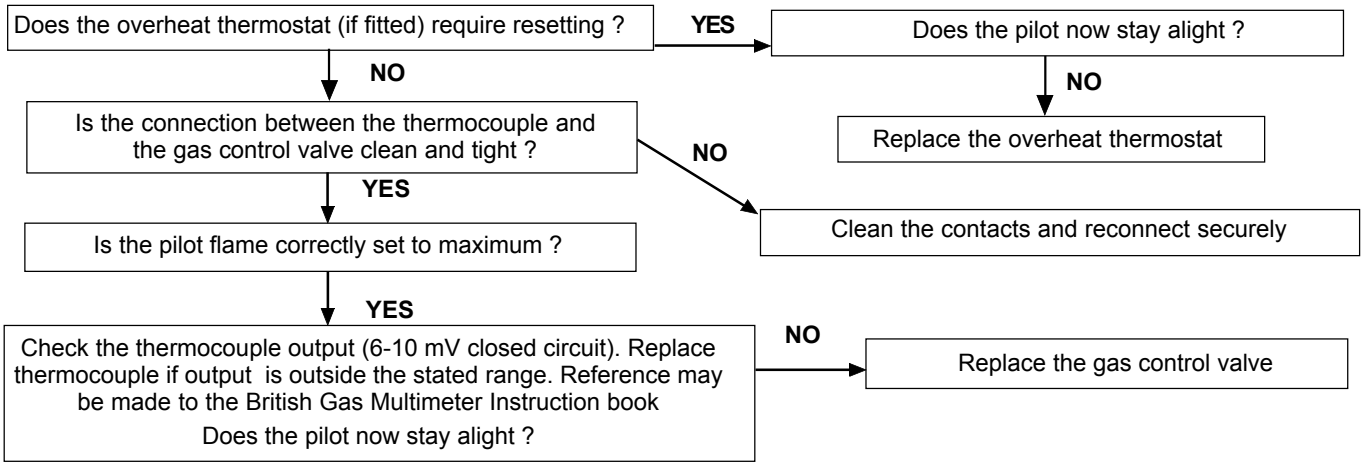

56 PILOT LIT BUT NO MAINS GAS

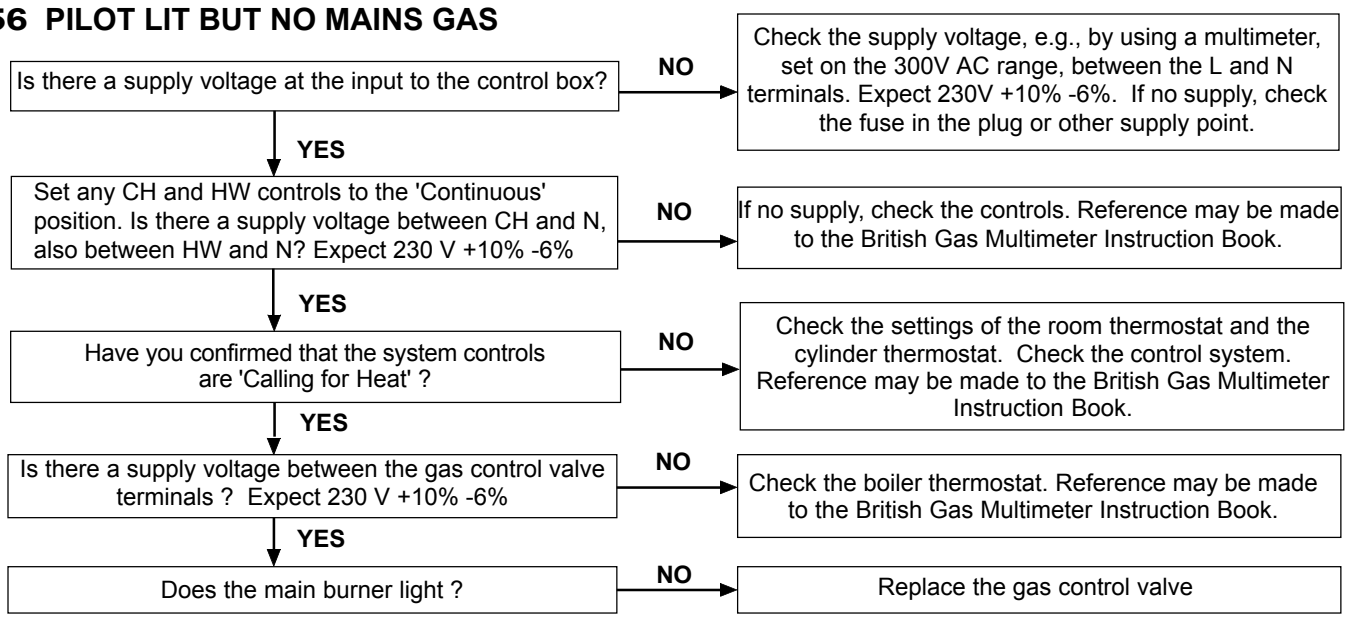

Note. *After any faults have been corrected, return all thermostatic and other controls to the previously noted settings*

SHORT LIST OF PARTS

The following are parts commonly required as replacements, due to damage or expendability. Their failure or absence is likely to affect the safety and/or performance of this appliance.

The list is extracted from the British Gas List of Parts which contains all available spare parts.

The full list is held by British Gas, **Caradon Plumbing Ltd.,** distributors and merchants.

When ordering spares please quote:

1. Boiler model
2. Appliance G.C. number
3. Description
4. Quantity
5. Product no.

Key No.	G.C. Part No.	Description		Qty.	Product No.
15	319 494	Sightglass assembly kit comprising sightglass, frame, two sightglass gaskets and two M5 wing nuts.		1	079 334
18		Main burner			
	385 879	AEROMATIC No. AC 19/123 269;	RS 3/60P	1	113 190
	E01 483	AEROMATIC No. AC 19/123 251;	RS 3/75P	1	013 952
	E01 485	LH AEROMATIC No. AC 19/123 227;	RS 3/100P	1	013 280
	E01 489	RH AEROMATIC No. AC 19/123 228;	RS 3/100P	1	013 281
19		Main burner injector			
	E01 493	BRAY Cat. 10 - size 650;	RS 3/60P	1	003 862
	398 044	BRAY Cat. 10 - size 850;	RS 3/75P	1	003 240
	389 612	BRAY Cat. 10 - size 520;	RS 3/100P	2	003 861
20		Pilot burner with injector (Key No. 21)			
	E01 548	HONEYWELL Q 385 A 1020;	RS 3/60P, 3/75P	1	079 390
	E01 549	HONEYWELL Q 349 A 1067;	RS 3/100P	1	079 391
21		Pilot injector			
	E00-333	HONEYWELL, 45 004 114 005	RS 3/60P, 3/75P	1	004 816
	E01-506	HONEYWELL, 45 004 114 004B	RS 3/100P	1	004 590
22	E01-507	Gas control valve - HONEYWELL V 4600 E 1016		1	100 603
24	395 705	Piezo unit - MORGAN/MATROC 60080-002.		1	003 939
25		Ignition electrode			
	397 945	BUCCLEUCH,BE/3231	RS 3/60P, 3/75P	1	004 713
	382 519	MORGAN/MATROC, 60877	RS 3/100P	1	003 777
26		Ignition (HT) lead			
	E01 412	460 mm long	RS 3/60P, 3/75P	1	052 888
		600 mm long	RS 3/100P	1	057 254
27	390 210	Thermocouple - HONEYWELL Q 309 A 2747, 750mm lg.		1	003 876
32		Thermostat - RANCO K36 - P1354		1	151 903
33	308 557	Thermostat knob		1	111 904

57 SHORT PARTS

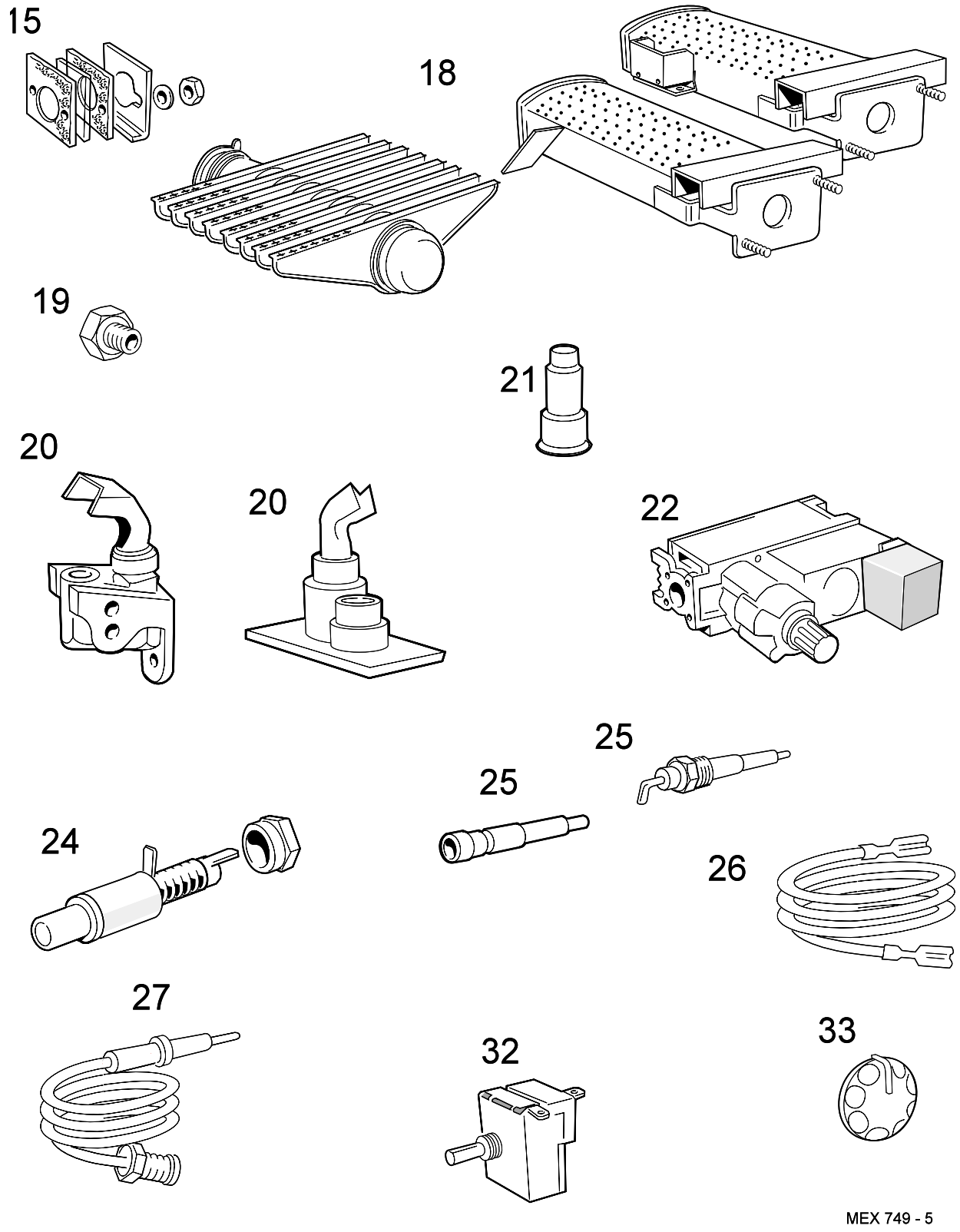

58 BOILER CASING ASSEMBLY

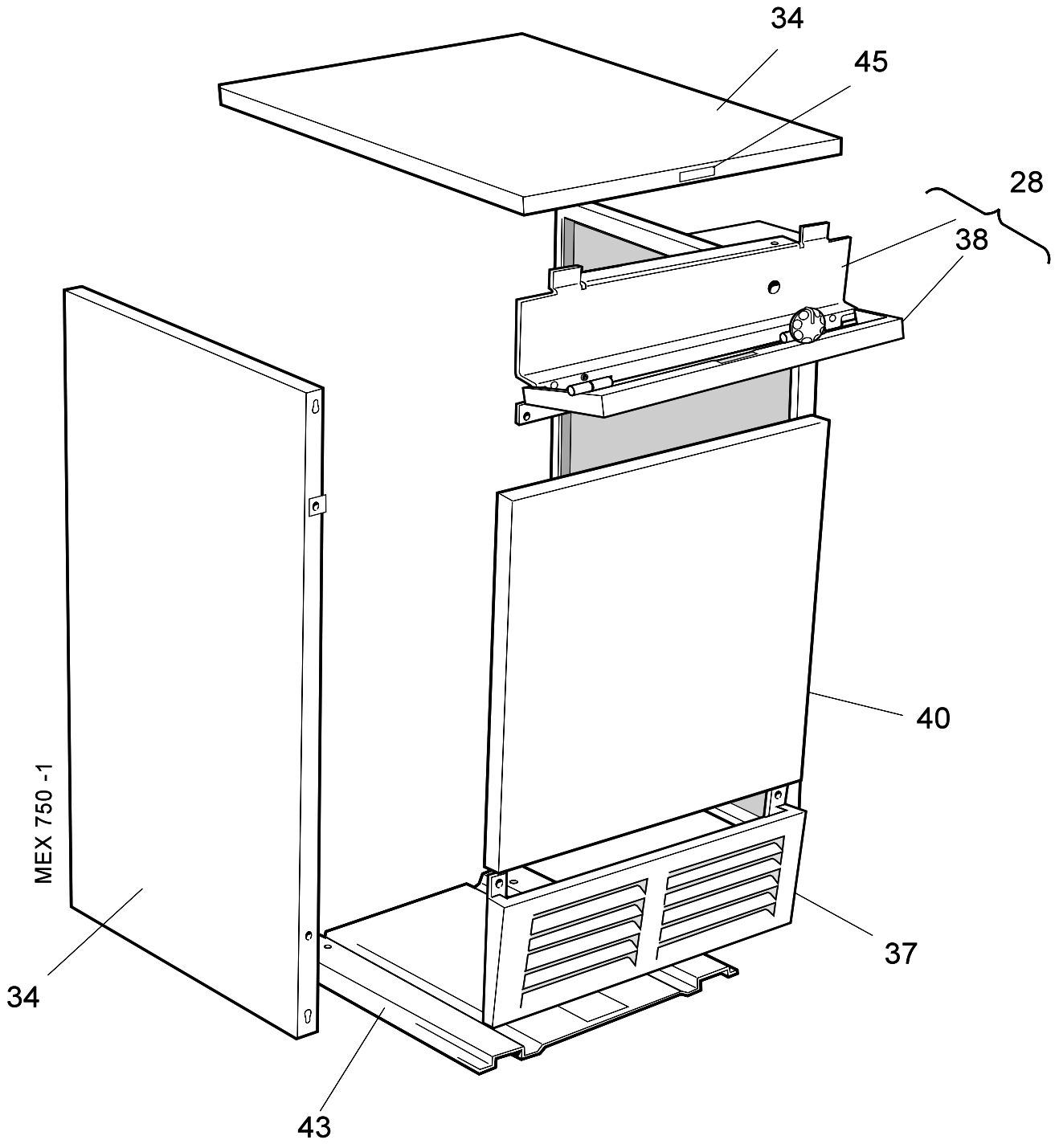

Legend.

29. Casing complete.
30. Controls panel complete.
41. Side panel.
42. Top panel.
43. Grille assy.
44. Lower front panel.
47. Baseplate.

59 BOILER CONTROL PANEL - Exploded View

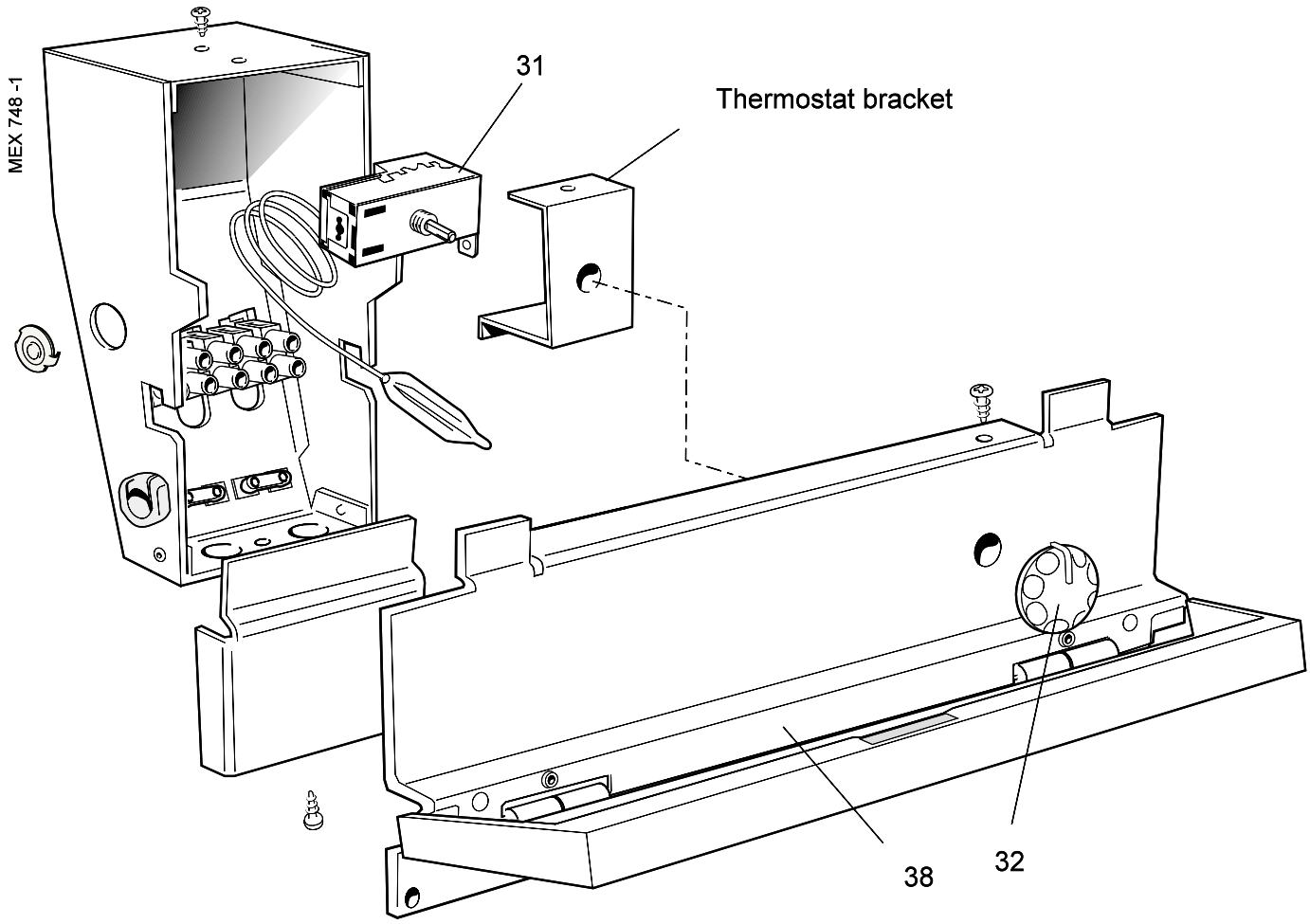

Legend.

30. Control panel complete.
31. Control box.
32. Control thermostat.
33. Control thermostat knob.
36. Control panel.
37. Magnetic strip.
38. Control front panel (door)

60 BURNER AND CONTROLS ASSEMBLY - RS 3/60P & RS 3/75P - Exploded View

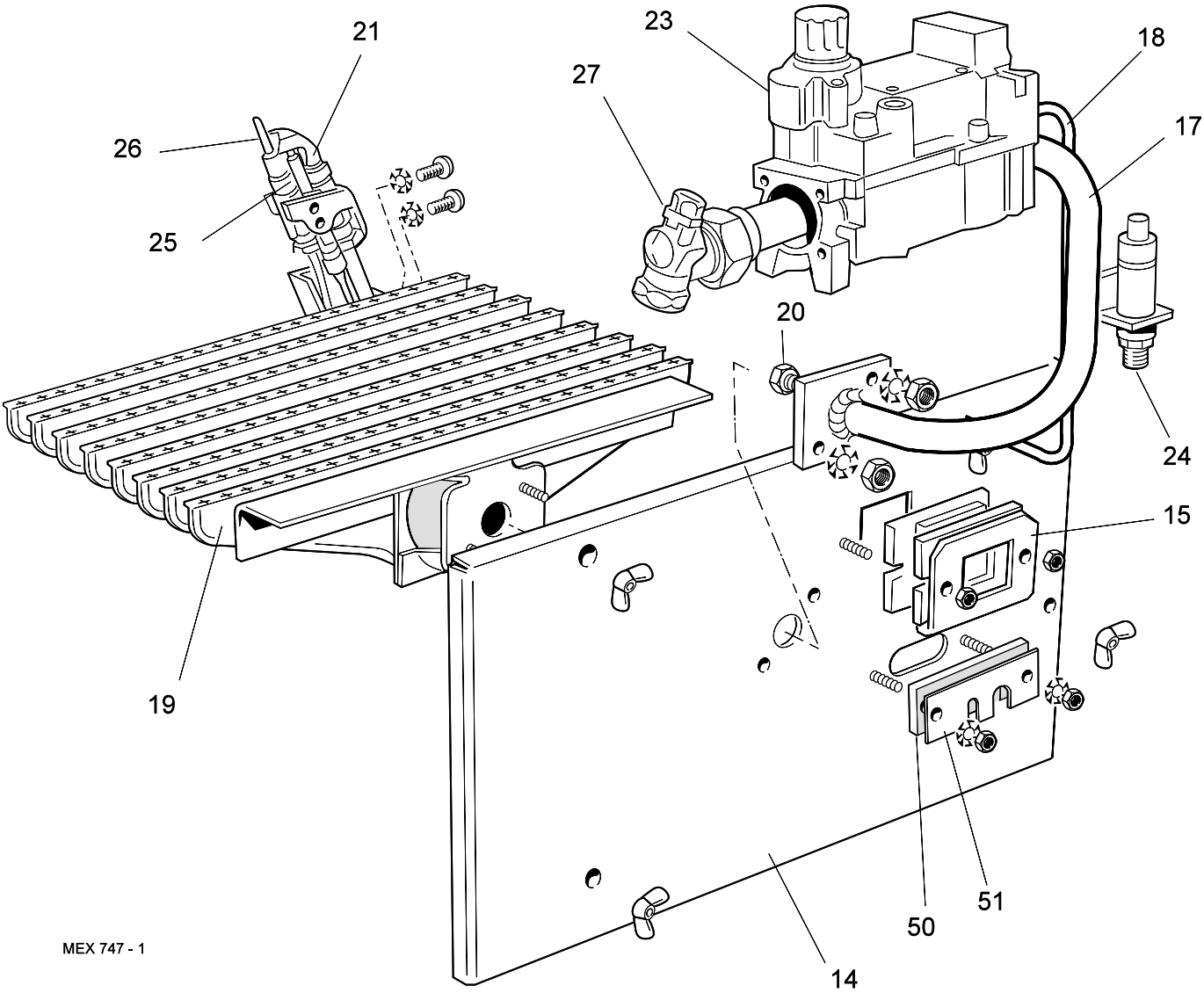

Legend.

14. Front plate assy.
15. Sightglass assy.
16. Burner manifold.
17. Pilot pipe.
18. Main burner.
19. Main injector.
20. Pilot burner.
22. Gas valve.
23. 'O' ring.
24. Piezo unit spark generator.
25. Ignition electrode.
26. Ignition lead.
27. Thermocouple.
28. Gas cock.
50. Sealing gasket.
51. Sealing plate.

61 BURNER AND CONTROLS ASSEMBLY - RS 3/100P - Exploded View

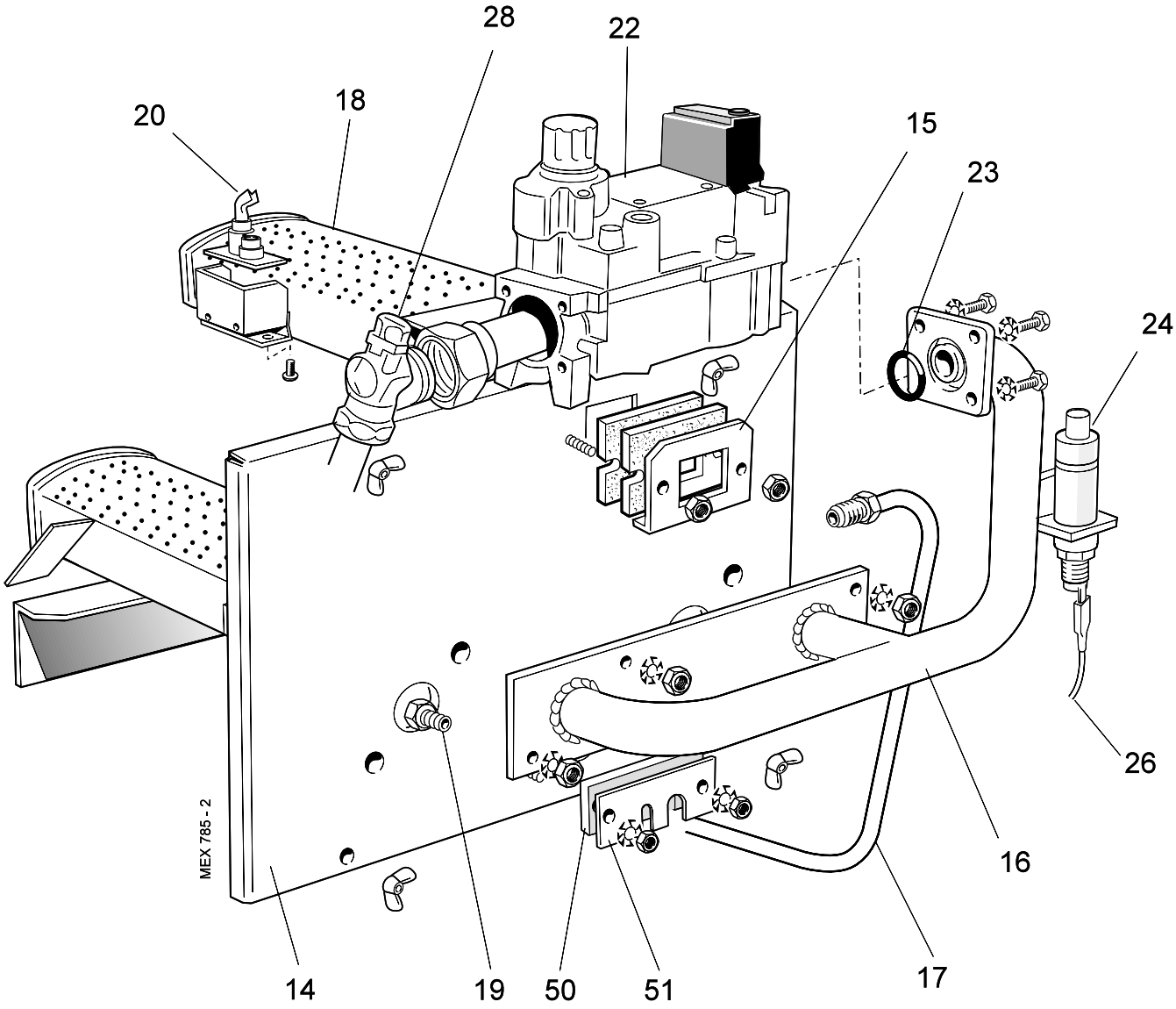

Legend.

14. Front plate assy.
15. Sightglass assy.
16. Burner manifold.
17. Pilot pipe.
18. Main burner.
19. Main injector.
20. Pilot burner.
22. Gas valve.
23. 'O' ring.
24. Piezo unit spark generator.
26. Ignition lead.
28. Gas cock.
50. Sealing gasket.
51. Sealing plate.

THIS SYMBOL IS YOUR ASSURANCE OF QUALITY

These appliances are designed for use with Natural Gas only. They have been tested and conform with the provisions of BS. 6332 and BS. 5258.

The code of practice for the installation, commissioning & servicing of central heating systems

CERTIFIED PRODUCT
Manufactured under a BS EN ISO 9001: 1994
Quality System accepted by BSI

CARADON PLUMBING Ltd, P.O. Box 103, National Ave, Kingston upon Hull, HU5 4JN. Telephone: 01482 492 251 Fax: 01482 448 858. Registration No. London 322 137. Registered Office: National Avenue, Kingston upon Hull, HU5 4JN. *A subsidiary of Caradon p.l.c*

Technical Training

The Caradon Plumbing Technical Training Centre offers a series of first class training courses for domestic, commercial and industrial heating installers, engineers and system specifiers.
For details of courses please ring: 01270 413624

Caradon Plumbing Ltd. pursues a policy of continuing improvement in the design and performance of its products. The right is therefore reserved to vary specification without notice.

September 1999 UIN 151 911 A02

Ideal Installer/Technical Helpline: 01482 498663

YOUR FEEDBACK

and your chance to win a free boiler

At Ideal we've been leaders in the design and engineering of robust and reliable boilers for over 90 years. We want to continue as leaders by listening to your suggestions for how to improve our boilers and our service. We will be giving away a free boiler for the five best ideas every year (to be selected by our Technical Director). Please complete this form, using extra sheets if required, and post it or fax it to us on 01482 498699.

Boiler details

Model / Size *(e.g. Classic RS 230, Mexico CF 3/60 etc. Details on control panel door)*

Date of Installation

Installer details

Name

Address

Post Code

Telephone (*Please include STD code*)

How I would improve this boiler:

My general comments for Ideal:

Caradon Plumbing Solutions

Ideal Installer/Technical Helpline: 01482 498663

Further information

If you would like information about Ideal Boilers please complete this sheet and fax it to us on 01482 498699 or post it to Caradon Plumbing Limited, PO Box 103, National Avenue, Kingston upon Hull, HU5 4JN.

Installer details

Name

Address

Post Code

Telephone (*Please include STD code*)

General information required

- ☐ *Please send me details of Ideal Training Courses.*
- ☐ *Please arrange for a technical representative to contact me.*
- ☐ *Please arrange for me to join an Ideal factory tour.*

Range guides required

- ☐ *The Ideal Guide: a specifier's and installer's introduction to the Ideal domestic boiler range.*
- ☐ *The Ideal Householders Guide: to assist the installer when presenting to his/her customers.*

Technical manuals required

- ☐ *The Ideal C class combi boiler*
- ☐ *The Ideal Classic wall hung boiler*
- ☐ *The Ideal Classic System wall hung boiler*
- ☐ *The Ideal Classic LX Deluxe wall hung boiler*
- ☐ *The Ideal Mexico floor standing boiler*
- ☐ *The Ideal Minimiser heat-saving boiler*
- ☐ *The Ideal Response combi boiler*
- ☐ *The Ideal Response SE super efficiency combi boiler*
- ☐ *The Ideal Systemiser SE super efficiency system boiler*
- ☐ *The Ideal Concord high output boiler*
- ☐ *The Ideal Buccaneer oil fired boiler*

Caradon
Plumbing Solutions

Caradon Plumbing Ltd, PO Box 103, National Avenue, Kingston upon Hull, HU5 4JN. Telephone: 01482 492251 Fax: 01482 448858.

Ideal Installer/Technical Helpline: 01482 498663

U.I.N. 151911 A0