installation and servicing

Mexico Super

Your Ideal installation and servicing guide

See reverse for **Mexico Super** users guide

RS440, RS450 RS460 & RS470

When replacing any part on this appliance use only spare parts that you can be assured conform to the safety and performance specification that we require. Do not use reconditioned or copy parts that have not been clearly authorised by Ideal Boilers.

December 2003 UIN 200 941 A01

Ideal BOILERS

ENGINEERED FOR PEACE OF MIND

GENERAL

Table 1 - General Data

Boiler Size			RS440	RS450	RS460	RS470
Gas Supply Connection		in. BSP	Rc 1/2 (1/2)			
Number of Boiler Sections			2	3	3	3
Flow and Return Connections			Rc 1 (1" BSP)			
MAXIMUM Static Water Head		m (ft.)	30.5 (100) (3 bar)			
MINIMUM Static Water Head		m (ft.)	1.0 (3.3)			
Electrical Supply			230 V ~50 Hz			
External Fuse Rating (Power Consumption)			3 A (5 W)			
Water Content		litre (gal.)	5.0 (1.1)	7.4 (1.6)	7.4 (1.6)	7.4 (1.6)
Dry Weight		kg. (lb.)	71 (157)	93 (206)	93 (206)	93 (206)
Max. Inst Weight		kg. (lb.)	64 (141)	87 (192)	87 (192)	87 (192)
Boiler Size	Height	mm (in.)	850 (33.5)			
	Width	mm (in.)	440. (17.4)			
	Depth	mm (in.)	533 (21.0)			
Gas Type			Natural 2 H			
Gas Supply Pressure			20 mb			

Table 2 - Performance Data

Boiler Size		RS440	RS450	RS460	RS470
Boiler Input Gas Consumption	kW (Btu/h)	14.4 (49 100)	17.9 (61 100)	21.7 (74 000)	25.1 (85 600)
	l/s (ft.^{3}/h)	0.37 (47.3)	0.46 (58.9)	0.56 (71.3)	0.65 (82.5)
Boiler Output to Water	kW (Btu/h)	11.7 (40 000)	14.7 (50 000)	17.6 (60 000)	20.5 (70 000)
Burner Setting Pressure (hot)	mbar (in w.g.)	9.9 (4.0)	11.5 (4.6)	12.8 (5.1)	11.4 (4.6)
Flue Gas Flow Rate	g/s	6.7	8.3	10.2	11.8
Flue Gas Temperature	^{O}C	102	107	119	137
*Seasonal Efficiency (SEDBUK)	Band D	[78.5]%	[79.0]%	[78.9]%	[78.9]%

*The value is used in the UK government's Standard Assessment Procedure (SAP) for energy rating of dwellings. The test data from which it has been calculated have been certified by Advantica 0087.

Note.

Gas consumption is calculated using a calorific value of 38.7 MJ/m^3 (1038 Btu/ft^3) gross or 34.9 MJ/m^3 (935 Btu/ft^3) nett. To obtain the gas consumption at a different calorific value:-

a. *For l/s - divide the gross heat input (kW) by the gross C.V. of the gas (MJ/m^3)*

b. *For ft^3/h - divide the gross heat input (Btu/h) by the gross C.V. of the gas (Btu/ft^3)*

c. *The appliance is preset at the factory to the highest nominal rating.*

Key to symbols

IE = Ireland (Countries
GB = United Kingdom of destination)

PMS = Maximum operating pressure of water

C_{11} = A room sealed appliance designed for connection via ducts to a horizontal terminal, which admits fresh air to the burner and discharges the products of combustion to the outside without a fan in the combustion products circuit.

I_{2H} = An appliance designed for use on 2nd Family gas, Group H only.

CAUTION. To avoid the possibility of injury during the installation, servicing or cleaning of this appliance, care should be taken when handling edges of sheet steel components.

CONTENTS

Air Supply 6
Boiler Assembly - Exploded view 11
Boiler Clearances 5
Burner Assembly - Exploded view 35
Electrical Connections 17
Electrical Diagram 17
Electrical Supply 7
Fault Finding 30
Flue Fitting 15
Flue Installation 6
Gas Safety Regulations 4
Gas Supply 6
Initial Lighting 21
Installation 11
Mandatory Requirements 4
Pump 8
Servicing 23
Short List of Parts 31
System Diagrams (Electrical) 18
Terminal Guards 6
Terminal Sizes 14
Water Connections ..... 4 & 16
Water Systems 8
Water Treatment 16

Mexico Super RS

Natural Gas only

B.G. Certified - P.I. No. 87AT14
Destination Countries: GB & IE

Appliance type: C_{11}

Models	G.C. Appliance No.
Mexico Super RS440	41 392 74
Mexico Super RS450	41 392 75
Mexico Super RS460	41 392 76
Mexico Super RS470	41 392 77

INTRODUCTION

The Mexico Super RS range is of floor standing, natural draught, balanced flue gas boilers. They are rated to provide central heating outputs of 11.7 kW (40,000 Btu/h) to 20.5 kW (70,000 Btu/h).

The boiler has a cast iron heat exchanger and is supplied fully assembled, complete with a white enamelled mild steel casing.

A door at the top of the casing front panel hinges down, revealing the boiler thermostat control (and programmer, if fitted).

The boilers are suitable, as standard, for connection to open-vented systems ONLY - an overheat thermostat kit is available to allow the boiler to be used on sealed water systems.

The systems may be:

- pumped or gravity circulating indirect DHW only
- pumped central heating only
- pumped central heating combined with either a pumped or gravity circulating indirect DHW circuit.

For GB, to comply with Building Regulations Part L1 (Part J in Scotland) the boiler should be fitted in accordance with the manufacturer's instructions. Self-certification that the boiler has been installed to comply with Building Regulations can be demonstrated by completing and signing the Benchmark log book.

BENCHMARK LOG BOOK DETAILS

Boiler	Page
Make and model	3
Appliance serial no. on data badge	11
SEDBUK No. %	2
Controls	
Time and temperature control to heating	18/19
Time and temperature control to hot water	18/19
Heating zone valves	18/19
TRV's	7
Auto bypass	7
Boiler interlock	7
For all boilers	
Flushing to BS.7593	16
Inhibitor	16
Central heating mode	
Heat input	to be calculated
Burner operating pressure	measure and record
Central heating flow temp.	measure and record
Central heating return temp.	measure and record
For combination boilers only	
Scale reducer	n/a
Hot water mode	
Heat input	n/a
Max. operating burner pressure	n/a
Max. operating water pressure	n/a
Cold water inlet temp	n/a
Hot water outlet temp.	n/a
Water flow rate at max. setting	n/a
For condensing boilers only	
Condensate drain	n/a

For all boilers: *complete, sign & hand over to customer*

For assistance see Technical Helpline on the back page

NOTE TO THE INSTALLER: LEAVE THESE INSTRUCTIONS ADJACENT TO THE GAS METER. ALSO COMPLETE THE BENCHMARK LOG BOOK AND GIVE THIS TO THE CUSTOMER.

benchmark™

This boiler may require 2 or more operatives to move it to its installation site, remove it from its packaging base and during movement into its installation location. Manoeuvring the boiler may include the use of a sack truck and involve lifting, pushing and pulling. The use of 1" pipe stubs of suitable lengths may be temporarily screwed into the boiler tappings to act as handles.

Caution should be exercised during these operations.

Operatives should be knowledgeable in handling techniques when performing these tasks and the following precautions should be considered:

- Split the boiler down to reduce the weight, e.g. remove casing and hardware pack. Refer to Frame 9.
- Be physically capable.
- Use PPE as appropriate, e.g. gloves, safety footwear.

During all manoeuvres and handling actions, every attempt should be made to ensure the following unless unavoidable and/or the weight is light.

- Keep back straight.
- Avoid twisting at the waist.
- Avoid upper body/top heavy bending.
- Always grip with the palm of the hand.
- Use designated hand holds.
- Keep load as close to the body as possible.
- Always use assistance if required.

OPTIONAL EXTRA KITS

Programmer Kit

Fits neatly within the casing. Separate fitting instructions are included with this kit.

Overheat Thermostat Kit Available to allow the boiler to be used on sealed water systems.

GAS SAFETY

CURRENT GAS SAFETY (INSTALLATION AND USE) REGULATIONS OR RULES IN FORCE.

The appliance is suitable only for installation in GB and IE and should be installed in accordance with the rules in force.

In GB, the installation must be carried out by a CORGI Registered Installer, or in IE a competent person. It must be carried out in accordance with the relevant requirements of the:

- Gas Safety (Installation and Use) Regulations
- The appropriate Building Regulations either The Building Regulations, The Building Regulations (Scotland), Building Regulations (northern Ireland).
- The Water Fittings Regulations or Water byelaws in Scotland.
- The Current I.E.E. Wiring Regulations.

Where no specific instructions are given, reference should be made to the relevant British Standard Code of Practice.

In IE, the installation must be carried out by a Competent Person and installed in accordance with the current edition of I.S.813 "Domestic Gas Installations", the current Building Regulations and reference should be made to the current ETCI rules for electrical installation.

Detailed recommendations are contained in the following British Standard Codes of Practice:

BS. 6891 Low pressure installation pipes.

BS. 6798 Installation of gas fired hot water boilers of rated input not exceeding 60 kW.

BS. 5449:1 Forced circulation hot water systems (small bore and microbore domestic central heating systems).

BS. 5546 Installation of gas hot water supplies for domestic purposes (2nd Family Gases).

BS. 5440: 1 Flues for gas appliances of rated input not exceeding 60 kW.

BS. 5440: 2 Ventilation for gas appliances of rated input not exceeding 60 kW.

BS 7593 Treatment of water in Domestic Hot Water Central Heating Systems.

Health and Safety Document No. 635.

The Electricity at Work Regulations, 1989.

Manufacturer's notes must NOT be taken in any way as overriding statutory obligations.

IMPORTANT. These appliances are certificated by the British Standards Institution for safety and performance. It is important, therefore, that no external control devices, e.g. flue dampers, economisers etc., are directly connected to these appliances unless covered by these Installation and Servicing Instructions or otherwise recommended by **Caradon Ideal Limited** in writing. If in doubt please enquire.

Any direct connection of a control device not approved by **Caradon Ideal Limited** could invalidate the BSI Certification and the normal appliance warranty. It could also infringe the Gas Safety Regulations and the above regulations or other statutory requirements.

SAFE HANDLING OF SUBSTANCES

Care should be taken when handling the boiler insulation panels, which can cause irritation to the skin. No asbestos, mercury or CFCs are included in any part of the boiler.

LOCATION OF BOILER

The boiler must be installed on a flat and level floor, capable of adequately supporting the weight of the boiler and any ancillary equipment.

The boiler may be fitted on a combustible floor.

Insulation is not necessary, unless required by the local authority.

The boiler must not be fitted outside.

Timber Framed Buildings

If the boiler is to be fitted in a timber framed building it should be fitted in accordance with the Institute of Gas Engineering document IGE/UP/7:1998.

Bathrooms

The boiler may be installed in any room or internal space, although particular attention is drawn to the requirements of the current I.E.E. (BS 7671) Wiring Regulations and, in Scotland, the electrical provisions of the building regulations applicable in Scotland with respect to the installation of the boiler in a room or internal space containing a bath or shower. For Ireland reference should be made to the current ETCI rules for electrical installations and I.S. 813: 2002.

Where a room-sealed appliance is installed in a room containing a bath or shower then the appliance and any electrical switch or appliance control utilising mains electricity should be so situated that it cannot be touched by a person using the bath or shower.

Where installation will be in an unusual location, special procedures may be necessary and BS.6798 gives detailed guidance on this aspect.

Compartment Installations

A compartment used to enclose the boiler MUST be designed and constructed specially for this purpose.
An existing cupboard or compartment may be used, providing it is modified for the purpose.

1 BOILER WATER CONNECTIONS

1. This appliance is NOT suitable for use in a direct hot water system.
2. If the boiler is to be used on a sealed system, an Overheat Thermostat Kit is available and must be installed in accordance with the instructions supplied with the kit.

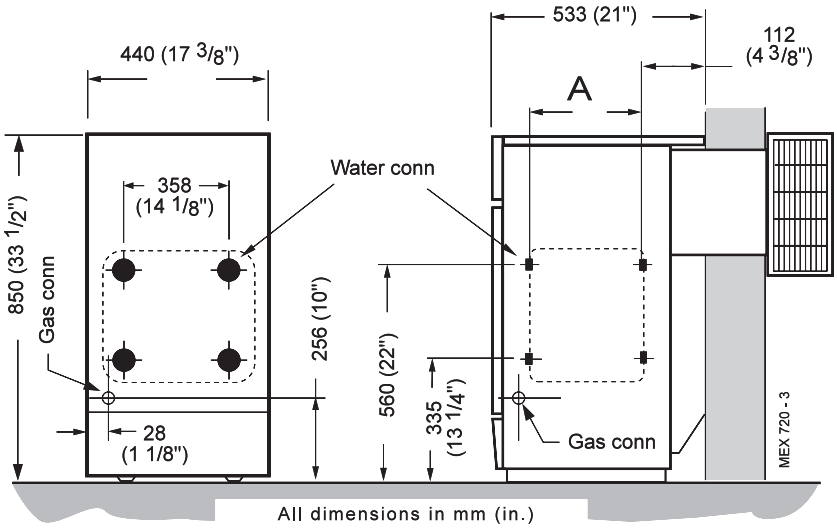

Boiler	Dimension A
RS440	152mm (6")
RS450, RS460 RS470	226mm (8 7/8")

2 FLOOR MOUNTING AND BOILER CLEARANCES

Flammable materials must not be placed in close proximity to the appliance. Materials giving off flammable vapours must not be stored in the same room as the appliance.

Floor mounting

1. The floor must be flat, level and of suitable load bearing capacity.
2. The back of the boiler may be fitted up to the wall.

Boiler clearances

The minimum overall dimensions of the space in which the boiler is to operate and to facilitate servicing are as follows:-

Boiler Size	Width	Depth	Height
RS440, RS450, RS460 & RS470.	460 mm (18")	533 mm (21")	870 mm (34 1/4")

Additional space will be required for installation, depending upon site conditions.

IMPORTANT.

In order to facilitate gas connection, a clearance of at least 100 mm (4") must be available at either the LH side or the RH side DURING installation. Refer to Frame 14.

In addition a MINIMUM clearance of 533 mm (21") MUST be available at the front of the boiler, for servicing.

Terminal sizes

Boiler Size	Depth	Height	Width
RS440, RS450, RS460 & RS470	152	338	372

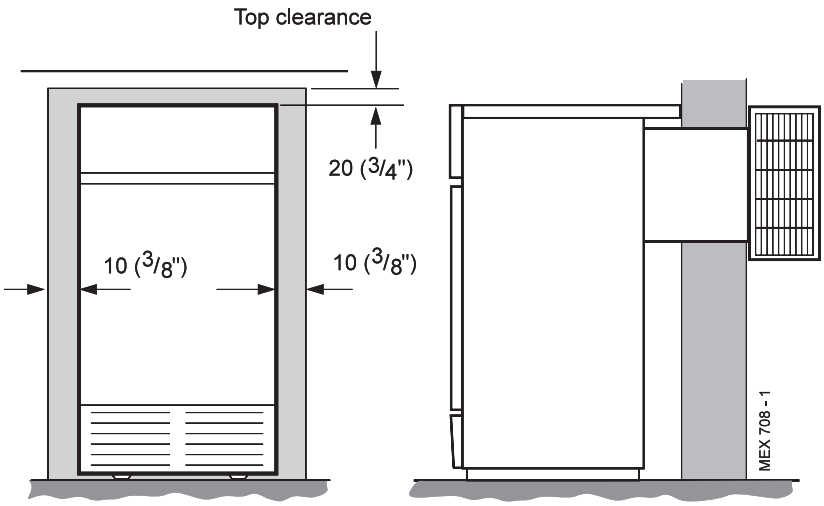

Front view **Side view**

In both cases details of essential features of cupboards/ compartment design, including airing cupboard installation, are to conform to the following:

- BS. 6798.
- The position selected for installation MUST allow adequate space for servicing in front of the boiler and for air circulation around the boiler.

  Side clearance is only necessary for installation. The amount of side clearance will depend upon the type of connection used.
- This position MUST also permit the provision of a satisfactory flue termination.
- For the minimum clearances required for safety, and subsequent service, see Frame 2.

GAS SUPPLY

The local gas supplier should be consulted, at the installation planning stage, in order to establish the availability of an adequate supply of gas. An existing service pipe must NOT be used without prior consultation with the local gas supplier.

The boiler is to be installed only on a gas supply with a governed meter.

A gas meter can only be connected by the local gas supplier or by a local regional contractor.

Check that the appliance is suitable for the proposed gas supply. An existing meter should be checked, preferably by the gas supplier, to ensure that the meter is adequate to deal with the rate of gas supply required. A **minimum** gas pressure of 20 mbar MUST be available at the boiler inlet, with the boiler operating.

Installation pipes MUST be fitted in accordance with BS. 6891. In IE refer to I.S. 813:2002. Pipework from the meter to the boiler MUST be of an adequate size.

The complete installation MUST be tested for gas soundness and purged as described in the above code.

Table 3 - Balanced flue terminal position

Terminal Position	Minimum Spacing 440	Minimum Spacing 450,460,470
1a. Directly BELOW an opening, air brick,opening window etc.	600 mm (24")	1500mm (60")
1b. Directly ABOVE an opening, air brick,opening window etc.	300 mm (12")	300 mm (12")
1c. HORIZONTALLY to an opening, air brick,opening window etc.	400 mm (16")	600mm (24")
2. Below guttering, drain pipes or soil pipes	300 mm (12")	
3. Below eaves	300 mm (12")	
4. Below balconies or a car port roof	600 mm (24")	
5. From vertical drain pipes or soil pipes	300 mm (12")	
6. From an internal or external corner or to a boundary alongside the terminal	600 mm (24")	
7. Above adjacent ground, roof or balcony level	300 mm (12")	
8. From a surface or a boundary facing the terminal	600 mm (24")	
9. From a terminal facing a terminal	600 mm (24")	
10. From an opening in a car port (e.g. door or window) into dwelling	1200 mm (48")	
11. Vertically from a terminal on the same wall	1500 mm (60")	
12. Horizontally from a terminal on the wall	300 mm (12")	

FLUE INSTALLATION

Some pluming may occur at the termination so terminal positions where this could cause a nuisance should be avoided.

The flue must be installed in accordance with the recommendations of BS. 5440-1:2000. In IE refer to I.S. 813:2002.

The following notes are intended for general guidance:-

1. The boiler MUST be installed so that the terminal is exposed to external air.
2. It is important that the position of the terminal allows the free passage of air across it at all times.
3. Minimum acceptable spacing from the terminal to obstructions and ventilation openings are specified in Table 3.
4. Where the lowest part of the terminal is fitted less than 2m (6' 6") above a balcony, above ground or above a flat roof to which people have access then the terminal MUST be protected by a purpose designed guard.

   Terminal guards are available from boiler suppliers. In case of difficulty seek advice from:

   Grasslin (UK) Ltd., Tower House, Vale Rise, Tonbridge, Kent TN9 1TB.
   Tel: +44 (0) 1732 359 888. Fax: +44 (0) 1732 354 445
   www.tfc-group.co.uk

   Ensure that the guard is fitted centrally
5. Where the terminal is fitted within 1000mm (39 1/2") of a plastic or painted gutter or 500mm (19 1/2") of painted eaves then an aluminium shield at least 1000mm (39 1/2") long should be fitted to the underside of the gutter or painted surface.
6. The air inlet/products outlet duct and the terminal of the boiler MUST NOT be closer than 25mm (1") to combustible material. Detailed recommendations on the protection of combustible material are given in BS. 5440-1:2000. In IE refer to I.S. 813:2002.

IMPORTANT.

It is absolutely ESSENTIAL to ensure, in practice, that products of combustion discharging from the terminal cannot re-enter the building or any other adjacent building through ventilators, windows, doors, other sources of natural air infiltration or forced ventilation/air conditioning. If this should occur, the appliance MUST be turned OFF, labelled 'unsafe' and corrective action taken.

TERMINAL

The terminal assembly can be adapted to accommodate various wall thicknesses. Refer to Frame 8.

AIR SUPPLY

Detailed recommendations for air supply are given in BS.5440:2. In IE refer to I.S. 813:2002.

The following notes are for general guidance:

1. It is NOT necessary to have a purpose provided air vent in the room or internal space in which the boiler is installed.
2. If the boiler is to be installed in a cupboard or compartment, permanent air vents are required (for cooling purposes) in the cupboard/compartment, at both high and low levels. The air vents must either communicate with room/internal space, or be direct to outside air. The minimum effective areas of the permanent air vents, required in the cupboard/compartment, are specified as follows and are related to maximum rated heat input.

3. Both air vents MUST communicate with the same room or internal space or MUST be on the same wall to outside air.
4. In siting the air vents care must be taken to avoid the freezing of pipework.

Table 4 - High and low vent areas

Boiler	Air from room/internal space cm² (in.²)		Air direct from outside cm² (in.²)	
	High level	Low level	High level	Low level
RS440	143 (23)	143 (23)	72 (12)	72 (12)
RS450	173 (27)	173 (27)	87 (14)	87 (14)
RS460	208 (33)	208 (33)	104 (17)	104 (17)
RS470	245 (38)	245 (38)	123 (19)	123 (19)

WATER CIRCULATION SYSTEM

The boiler must NOT be used for direct hot water supply. The boiler is suitable for connection to pumped open vent central heating systems, pumped central heating combined with pumped or gravity indirect domestic hot water supply systems.

The boiler is NOT suitable for gravity heating systems. The hydraulic resistance of the boilers at *maximum output* with 11 °C (20 °F) temperature differentials are shown in the graph below.

The central heating system should be in accordance with BS. 6798 and, in addition, for smallbore and microbore systems, BS. 5449:1.

The domestic hot water system, if applicable, should be in accordance with the relevant recommendations of BS. 5546.

Copper tubing to BS. 2871:1 is recommended for water carrying pipework.

The hot water storage cylinder MUST be of the indirect type and should preferably be manufactured of copper.

Single feed, indirect cylinders are not recommended and MUST NOT be used on sealed systems.

The hot water cylinder and ancillary pipework not forming part of the useful heating surface should be lagged to prevent heat loss and any possible freezing - particularly where pipes run through roof spaces and ventilated underfloor spaces.

IMPORTANT

A minimum length of 2 metres of copper pipe MUST be fitted to both flow and return connections from the boiler before connection to any plastic piping.

The boiler must be vented. If venting cannot be done via a flow connection a separate vent MUST be fitted by the installer.

Draining taps MUST be located in accessible positions, which permit the draining of the whole system - including the boiler and hot water storage vessel. They should be at least 1/2" BSP nominal size and be in accordance with BS. 2879.

If required, a drain tap (not supplied) may be fitted to an unused bottom (1" BSP) tapping on the front of the boiler.

BOILER CONTROL INTERLOCKS

Caradon Ideal Limited recommend that heating systems utilising full thermostatic radiator valve control of temperature in individual rooms should also be fitted with a room thermostat controlling the temperature in a space served by radiators not fitted with such a valve as stated in BS. 5449.

Central heating systems controls should be installed to ensure the boiler is switched off when there is no demand for heating or hot water.

When thermostatic radiator valves are used, the space heating temperature control over a living / dining area or hallway having a heating requirement of at least 10% of the boiler heat output should be achieved using a room thermostat, whilst other rooms are individually controlled by thermostatic radiator valves. However, if the system employs thermostatic radiator valves on all radiators, or two port valves without end switches, then a bypass circuit must be fitted with an automatic bypass valve to ensure a flow of water should all valves be in the closed position.

ELECTRICAL SUPPLY

WARNING. The appliance MUST be efficiently earthed.

Wiring external to the appliance MUST be in accordance with the current I.E.E. (BS 7671) Wiring Regulations and any local regulations which apply. For Ireland reference should be made to the current ETCI rules for electrical installations.

The boiler is supplied for 230 V ~ 50 Hz single phase. The fuse rating is 3A.

Connection must be made in a way that allows complete isolation of the electrical supply - such as a double pole switch, having a 3mm (1/8") contact separation in both poles, or a plug and socket serving only the boiler and system controls.

The means of isolation must be accessible to the user after installation.

For bathroom installations the point of connection to the mains must be situated outside the bathroom.

Water Flow Rate and Pressure Loss

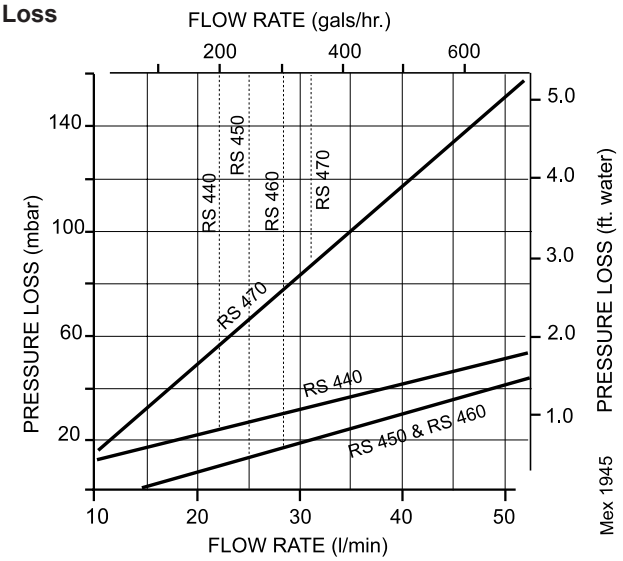

Dotted lines indicate flow rates equivalent to a temperature rise of 11 °C (20 °F)

3 MINIMUM REQUIREMENTS Fully pumped systems

1. Open vent and cold feed connections must be made to the boiler flow and return tappings according to the options shown in Frame 11.
2. The boiler is assumed to be the highest point of the circulating system.
3. The circulating pump is positioned on the FLOW and the vertical distance, between the pump and feed/ expansion tank, must comply with the pump manufacturer's minimum requirements, to avoid cavitation. Should these conditions not apply, either lower the pump position or raise the feed/ expansion tank above the minimum requirements of **Caradon Ideal Limited.**
4. The water velocity through the boiler flow / return pipes is assumed to be below 1 m/s (3 ft./s), whilst the pump flow rate is set to provide a temperature difference of 11 °C (20 °F) across the boiler flow / return, at design input.
5. This information is intended as a GUIDE ONLY and cannot take into account instantaneous changes in head caused by the operation of motorised valves, pumps etc.

   Due allowance MUST be made if surging is liable to occur.

   If in any doubt, contact **Caradon Ideal Limited.**

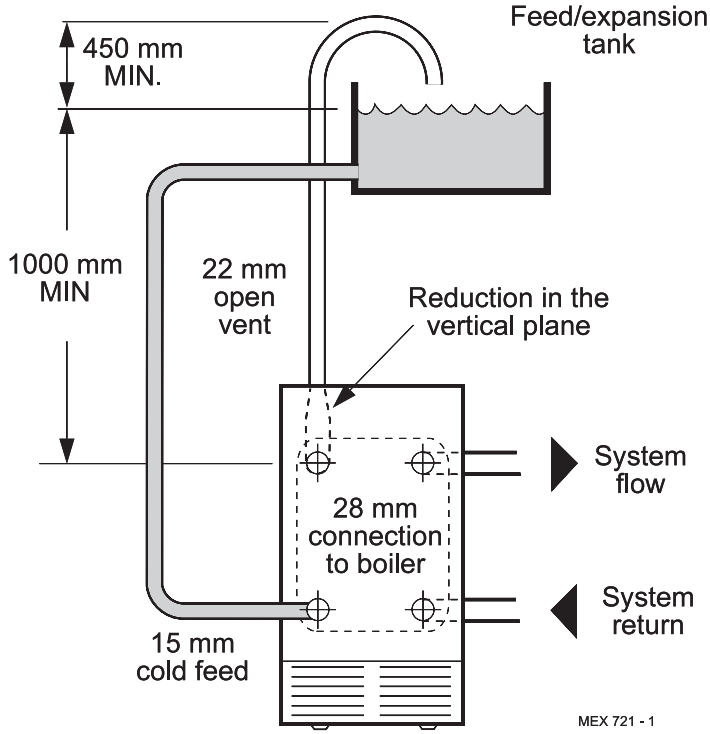

4 GRAVITY HOT WATER & PUMPED CENTRAL HEATING

1. Separate flow and return connections are used for each service. All possible configurations are given in Frame 11 and *ONLY those shown should be used.*
2. The schematic pipework graph is based on the assumption that NO MORE than 8 elbows are used in the gravity loop, including entry to the boiler.
3. For each extra elbow in excess of 8 (R) MUST be reduced by 300 mm (12") or (H) increased by 100 mm (4")
4. Whatever value is selected for (R), the value of (H) MUST be at least that indicated by the graph.

(R) = the horizontal distance between the centre line of the cylinder and the boiler tappings used - measured along the pipe run.

(H) = the vertical distance between the top of the boiler and the base of the cylinder.

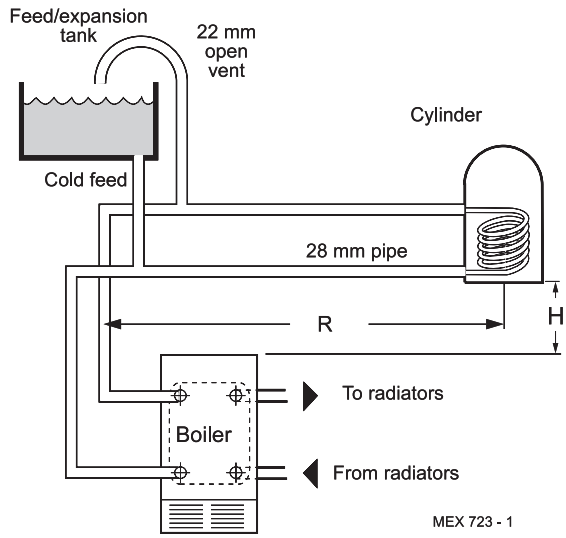

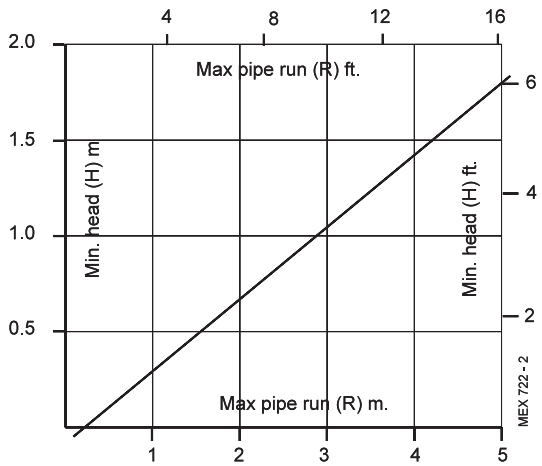

Notes.

a. *Flow and return pipes should rise vertically on leaving the boiler.*

b. *Horizontal pipes should be ABOVE ceiling level and as short as possible.*

c. *A MINIMUM inclination of 25 mm per 3 m run (1" per 10') is required to avoid air locks.*

If the above conditions cannot be met pumped primaries should be used.

5 SEALED SYSTEM REQUIREMENTS

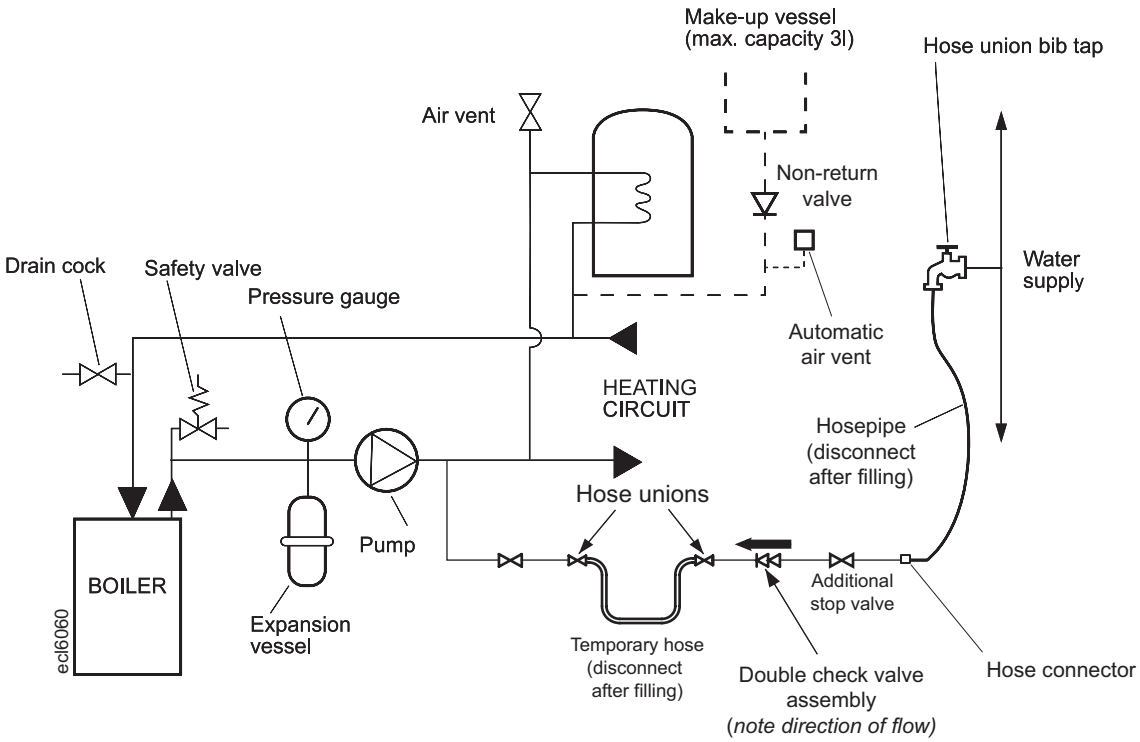

Note.

The method of filling, refilling, topping up or flushing sealed primary hot water circuits from the mains via a temporary hose connection is only allowed if acceptable to the local water authority.

1. **General**
   - **a.** The installation must comply with the requirements of BS.6798 and BS.5449.
   - **b.** The installation should be designed to work with flow temperatures of up to 82°C.
   - **c.** All components of the system, including the heat exchanger of the indirect cylinder, must be suitable for a working pressure of 3 bar (45 lb/in²) and temperature of 110°C. Care should be taken in making all connections so that the risk of leakage is minimised.
2. **Safety Valve**

   A spring loaded safety valve complying with the relevant requirements of BS.6759 must be fitted in the flow pipe, as close to the boiler as possible and with no intervening valve or restriction. The valve should have the following features:
   - **a.** A non-adjustable preset lift pressure not exceeding 3 bar (45 lb./in²)
   - **b.** A manual testing device.
   - **c.** Provision for connection of a discharge pipe. *The valve or discharge pipe should be positioned so that the discharge of water or steam cannot create a hazard to the occupants of the premises or cause damage to electrical components and wiring.*
3. **Pressure Gauge**

   A pressure gauge covering at least the range 0-4 bar (0-60 lb./in²) must be fitted to the system. The gauge should be easily seen from the filling point and should preferably be connected at the same point as the expansion vessel.
4. **Expansion Vessel**
   - **a.** A diaphragm type expansion vessel must be connected at a point close to the inlet side of the pump, the connecting pipe being not less than 15mm (1/2" nominal) size and not incorporating valves of any sort.
   - **b.** The vessel capacity must be adequate to accept the expansion of the system water when heated to 110°C (230°F)
   - **c.** The charge pressure must not be less than the static water head above the vessel The pressure attained in the system when heated to 110°C (230°F) should be at least 0.35 bar (5lb/in²) less than the lift pressure of the safety valve.

   For guidance on vessel sizing refer to Table 5, Frame 6. For further details refer to BS.5449. For IE refer to the current edition of I.S. 813.
5. **Cylinder**

   The cylinder must be either of the indirect coil type or a direct cylinder fitted with an immersion calorifier which is suitable for operating on a gauge pressure of 0.35 bar (5lb./in²) in excess of the safety valve setting. *Single feed indirect cylinders are not suitable for sealed systems.*
6. **Make-up Water**

   Provision must be made for replacing water loss from the system, either:
   - **a.** From a manually fitted make-up vessel with a readily visible water level. The vessel should be mounted at least 150mm (6") above the highest point of the system and be connected through a non-return valve to the system, fitted at least 300mm (12") below the make-up vessel on the return side of the domestic hot water cylinder or radiators.
   - **b.** Where access to a make-up vessel would be difficult by pre-pressurisation of the system. Refer to 'Filling.'

6 SEALED SYSTEM REQUIREMENTS - continued

7. Mains Connection

There must be no direct connection to the mains water supply or to the water storage tank supplying domestic water, even through a non-return valve, without the approval of the local water authority.

8. Filling

The system may be filled by one of the following methods:

a. Through a cistern, used for no other purposes, via a ball valve permanently connected directly to a service pipe and / or a cold water distributing pipe.

The static head available from the cistern should be adequate to provide the desired initial system design pressure. The cold feed pipe from the cistern should include a non-return valve and a stop valve with an automatic air vent connected between them, the stop valve being located between the system and the automatic air vent. The stop valve may remain open during normal operation of the system if automatic water make-up is required.

b. Through a self-contained unit comprising a cistern, pressure booster pump (if required) and, if necessary, an automatic pressure reducing valve and flow restrictor. The cistern should be supplied through a temporary connection from a service pipe or cold water distributing pipe.

This unit may remain permanently connected to the heating system to provide limited automatic water make-up. Where the temporary connection is supplied from a service pipe or distributing pipe which also supplies other draw-off points at a lower level then a double check valve shall be installed upstream of the draw-off point.

c. Through a temporary hose connection from a draw-off tap supplied from a service pipe under mains pressure. Where the mains pressure is excessive a pressure-reducing valve shall be used to facilitate filling.

The following fittings shall form a permanent part of the system and shall be fitted in the order stated:

A stop valve complying with the requirements of BS. 1010, Part 2 (the hose from the draw-off tap shall be connected to this fitting).

A test cock.

A double check valve of an approved type.

- Thoroughly flush out the whole of the system with cold water, without the pump in position.
- With the pump fitted, fill and vent the system until the pressure gauge registers 1.5 bar (21.5lb/in^2).

  Examine for leaks.
- Check the operation of the safety valve by manually raising the water pressure until the valve lifts. This should occur within ± 0.3 bar (± 4.3lb/in^2) of the preset lift pressure.
- Release water from the system until the initial system design pressure is reached.
- Light the boiler and heat the system to the maximum working temperature. Examine for leaks.
- Turn off the boiler and drain the system while still hot.
- Refill and vent the system.

Sizing procedure for expansion vessels: The volume of the expansion vessel (litres) fitted to a sealed system shall not be less than that given by Table 5, multiplied by a factor of 0.8 (for flow temperatures of less than 88 °C).

Table 5

Safety valve setting	3.0 bar			2.5 bar			2.0 bar	
Vessel charge and initial system pressure	0.5 bar	1.0 bar	1.5 bar	0.5 bar	1.0 bar	1.5 bar	0.5 bar	1.0 bar
Total water content of system (litres)	Expansion vessel volume (litres)							
25	2.1	2.7	3.9	2.3	3.3	5.9	2.8	5.0
50	4.2	5.4	7.8	4.7	6.7	11.8	5.6	10.0
75	6.3	8.2	11.7	7.0	10.0	17.7	8.4	15.0
100	8.3	10.9	15.6	9.4	13.4	23.7	11.3	20.0
125	10.4	13.6	19.5	11.7	16.7	29.6	14.1	25.0
150	12.5	16.3	23.4	14.1	20.1	35.5	16.9	30.0
175	14.6	19.1	27.3	16.4	23.4	41.4	19.7	35.0
200	16.7	21.8	31.2	18.8	26.8	47.4	22.6	40.0
225	18.7	24.5	35.1	21.1	30.1	53.3	25.4	45.0
250	20.8	27.2	39.0	23.5	33.5	59.2	28.2	50.0
275	22.9	30.0	42.9	25.8	36.8	65.1	31.0	55.0
300	25.0	32.7	46.8	28.2	40.2	71.1	33.9	60.0
Multiplying factors for other system volumes	0.0833	0.109	0.156	0.094	0.134	0.237	0.113	0.20

7 BOILER ASSEMBLY - Exploded View

Mexico Super RS with casing removed for clarity - RS450/460 shown.

Terminal grille
44
5
1
7
Tie rod
94
12
49
3
4
2
6
69
68
30
Mex 1921
8
47
46
24
18
28
Data badge

Detail of distributor tube alignment

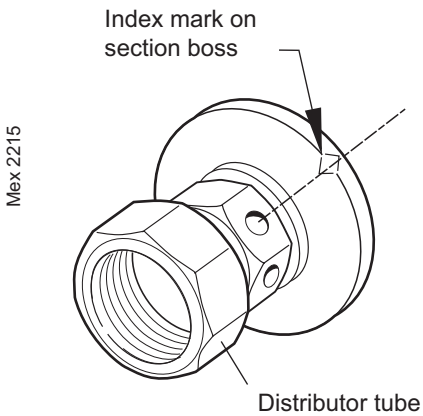

LEGEND

1. Heat exchanger assy.
2. Front section.
3. Middle section.
4. Section alignment rings and 'O' rings.
5. Back section.
6. Thermostat pocket.
7. Distributor tube.
8. Combustion chamber.
12. Collector hood.
18. Front plate.
24. Gas control valve.
28. Gas cock.
30. PCB.
44. Air/flue duct assy.
46. Baseplate.
49. Flue baffle.
68. Phial clip.
69. Split pin.
94. Cleanout cover.

8 UNPACKING

The boiler is supplied fully assembled in Pack A, together with either one of 3 packs: **B, B1 or C.**

Packs B, B1 or C contain the flue terminal appropriate to the wall thickness

Unpack and check the contents.

FLUE PACKS

- Flue terminal assembly

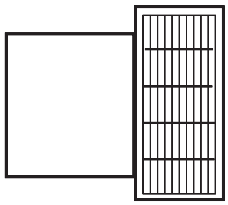

- Sachet of sealing mastic - 2 off

Packs B, B1 and C contents

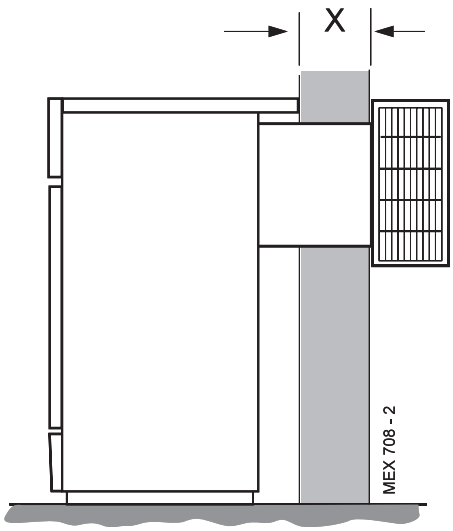

PACK 'A' CONTENTS

- Complete boiler assembly
- The Hardware Pack (listed separately below)
- These Installation and Servicing/Users Instructions

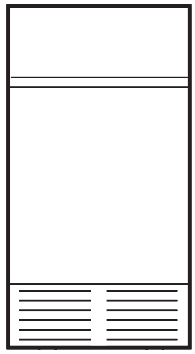

complete boiler assembly

HARDWARE PACK

- 1" BSP plugs - 5 off

- 1" x 1/2" BSP reducing bush - 1 off

- Cable strap - 2 off

- Distributor tube

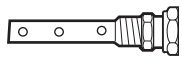

- 28mm Comp nut - 1 off

- 28mm olive - 1 off

- Thermostat pocket -1 off

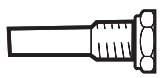

- Thermostat clip (RS450, RS460 & RS470 only) - 1 off

- Thermostat retaining pin - 1 off

Table 6. This table shows the flue pack required for the given wall thicknesses

Wall thickness Dimension (duct length) X shown above				Flue pack required
Boiler fitted flush with wall		**Boiler fitted in line with 600 mm kitchen units**		
114 to 191 mm	(4 1/2" to 7 1/2")	up to 125 mm	(up to 5")	**C**
229 to 305 mm	(9" to 12")	163 to 242 mm	(6 1/2" to 9 1/2")	**B**
318 to 394 mm	(12 1/2" to 15 1/2")	253 to 332 mm	(10" to 13")	**B1**

9 BOILER CASING REMOVAL

To install the boiler the casing MUST be removed.

1. Undo the 2 screws and lift off the lower front panel.
2. Remove 2 screws and lift off the grille assembly.
3. Disconnect the in-line connector on the PCB lead.
4. Remove the Burner On neon cable from the back of the control panel.
5. Remove the 2 screws securing the control panel and disengage the panel by lowering and pulling it forward.
6. Remove the 2 screws securing the top panel to the side.
7. Draw the top panel forward and lift it off the boiler.
8. Remove the 2 screws securing the LH side panel to the flue collector and baseplate.
9. Pull the panel forward, lifting it clear of the locating peg and remove.
10. Repeat steps 8 and 9 to remove the RH panel.
11. The boiler is held to the packaging base by 4 x M6 hex head screws. Remove the front screws, slacken the rear screws and remove the boiler from the packaging base.

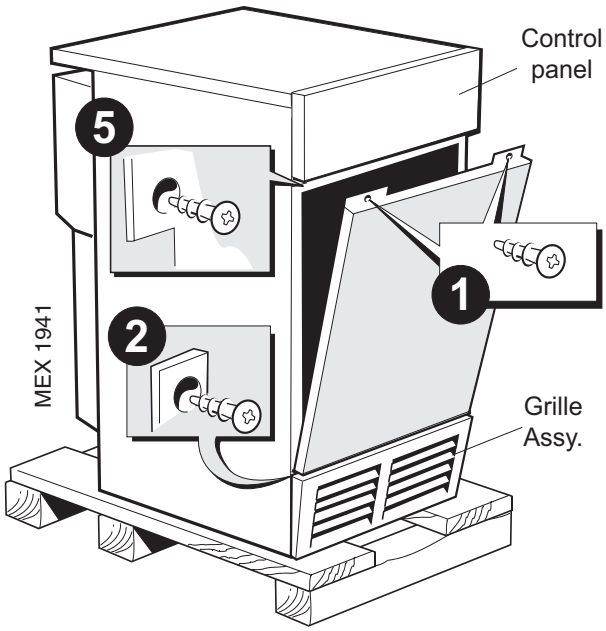

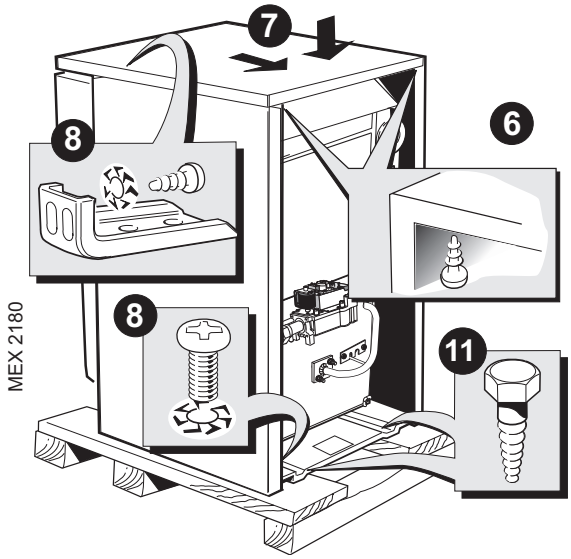

10 CHECKING THE FLUEWAY BAFFLES

1. Remove the flue cleanout cover.
2. Ensure that the baffles are fully inserted in the flueways.

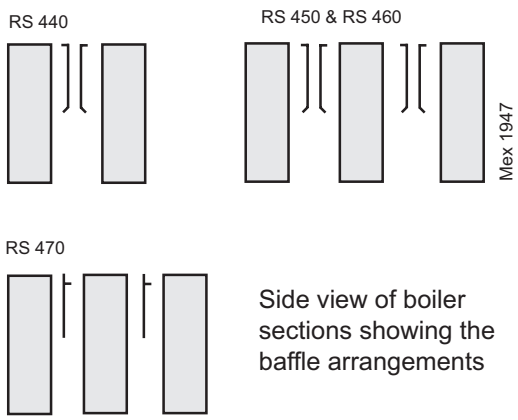

Side view of boiler sections showing the baffle arrangements

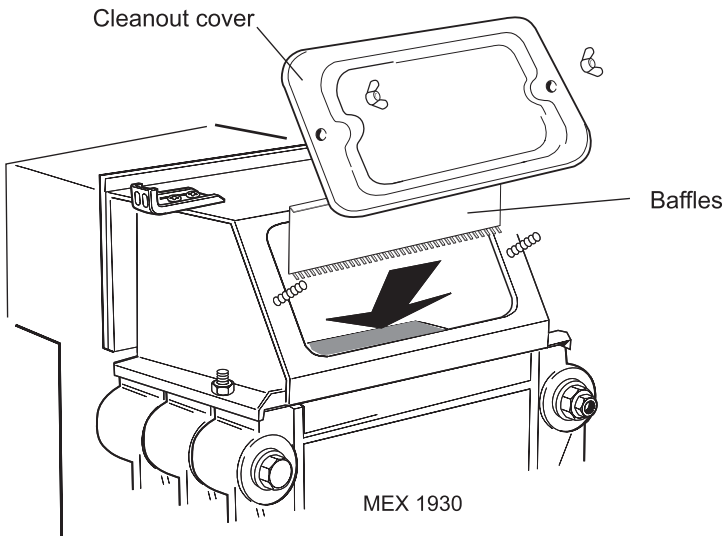

11 PREPARING THE BOILER

Table 7 - Fully Pumped Systems

Connections - as viewed at front		Thermostat Position
Back Section		Front Section
Flow	Return	Top
LH	LH	LH
LH	RH	LH
RH	RH	RH
RH	LH	RH

Table 8 - Gravity Domestic Hot Water and Pumped Central Heating

Connections - as viewed at front				Thermostat Position
Back Section				Front Section
CH		DHW		
Flow	Return	Flow	Return	Top
LH	LH	RH	RH	LH
LH	RH	RH	LH	LH
RH	RH	LH	LH	RH
RH	LH	LH	RH	RH

Note.

- *Before placing the boiler in the selected position any gas and water connections at the rear of the boiler should be prepared, due to the possible lack of access.*

1. Screw the distributor tube (supplied with a 1" BSP x 28mm copper adaptor) into the selected heating return tapping, using an appropriate jointing material.

IMPORTANT.

It is **IMPERATIVE** that the index mark on the distributor tube bush is in alignment with the mark on the section boss, as shown in Frame 7.

DO NOT disturb it when connecting subsequent pipework.

Fully pumped systems using more than 1 pump, serving separate zones, must have a common return connection to the distributor tube.

2. Select the desired pumped flow tapping.
3. Screw the supplied boiler thermostat pocket into the appropriate front section tapping, using an approved jointing material. Refer to Tables 7 and 8.
4. Connect pipe fittings to the rear tappings and plug any unused tappings.

Note. *If using iron elbows fit a short straight connector into the boiler tapping first, to clear the casing.*

12 PREPARING THE WALL

1. Cut the appropriate hole in the wall for insertion of the terminal assembly.

   Notes.

   a. Make good the hole on the INSIDE of the building to the given dimensions BEFORE fitting the boiler, to facilitate sealing between the terminal and the wall when the boiler is in position.

   b. The terminal MUST NOT come into contact with a combustible material such as that used in nonstandard construction of timber frame and plasterboard etc.

2. Place the boiler in the selected position.
3. Make good the brickwork around the air duct inside.

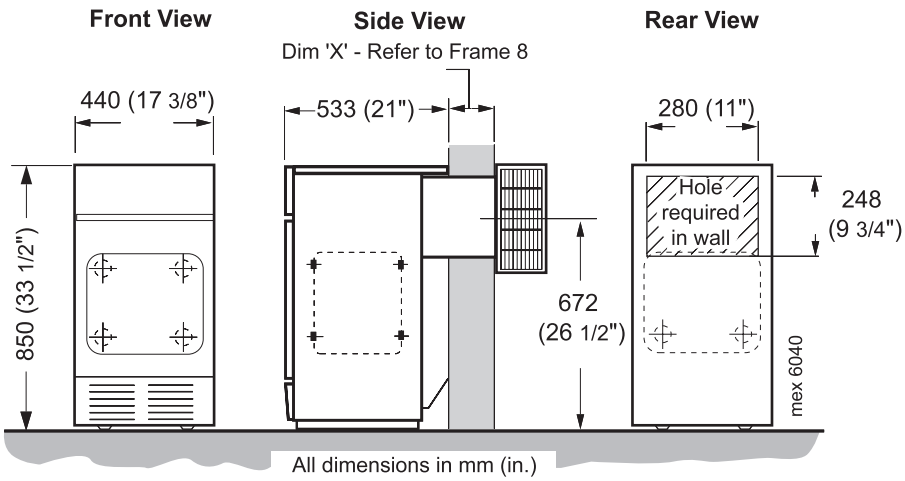

13 FITTING THE FLUE ASSEMBLY

Flue terminal assembly

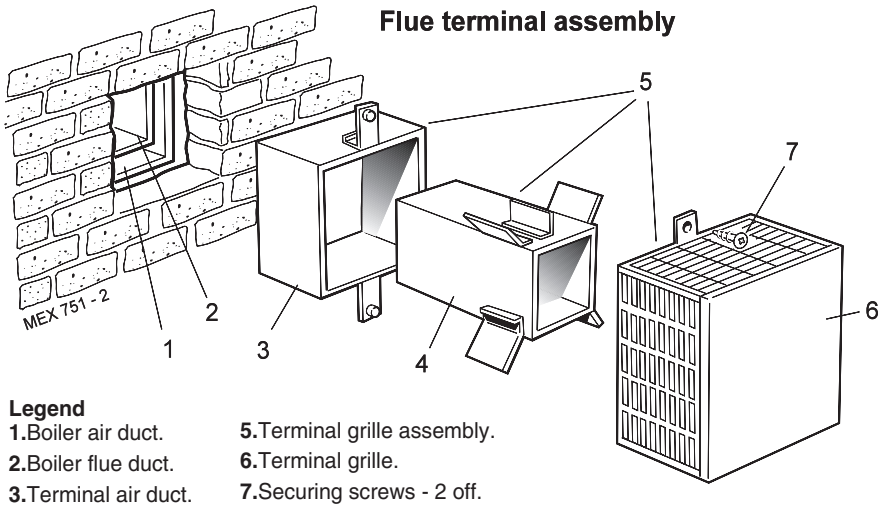

Legend

1.Boiler air duct.
2.Boiler flue duct.
3.Terminal air duct.
4.Terminal flue duct.
5.Terminal grille assembly.
6.Terminal grille.
7.Securing screws - 2 off.
8.Splitter plate.

Flue terminal shown in position

A. Air duct join
B. Flue duct join

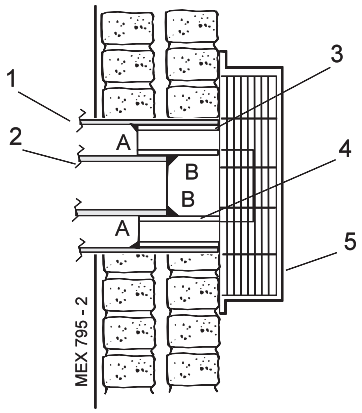

1. Remove the 2 screws and separate the terminal grille, terminal air duct and terminal flue duct.
2. From OUTSIDE of the building, pass the terminal air duct through the wall opening and slide it into the extension air duct, locating it as shown.
3. Push the duct fully in until the fixing brackets contact the wall face.
4. Ensure that the duct is level and make good between the wall and the duct from OUTSIDE of the building.
5. From OUTSIDE the building, seal the duct join (A) with the mastic provided.
6. From OUTSIDE the building, pass the terminal flue duct through the wall opening and slide it into the boiler flue duct pushing the flue duct fully in, up to the locating stops. Locate it as shown.
7. From OUTSIDE of the building, seal the duct join (B) with the mastic provided.
8. Fasten the terminal grille to the duct assembly.

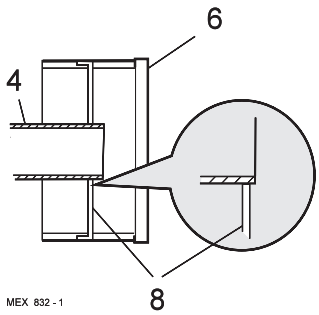

14 GAS CONNECTION

1. A MINIMUM working gas pressure of 20 mbar (8 in.w.g.) MUST be available at the boiler inlet, with the boiler operating.
2. Extend a gas supply pipe NOT LESS THAN 15mm (1/2") OD to the boiler and connect to the gas cock situated at the front LH side of the boiler.
3. Test the gas installation for soundness and purge in accordance with BS.6891: 1988. Refer to Frame 26.

Boiler	Dimension A
RS440	327 (12 7/8")
RS450 - 470	400 (15 3/4")

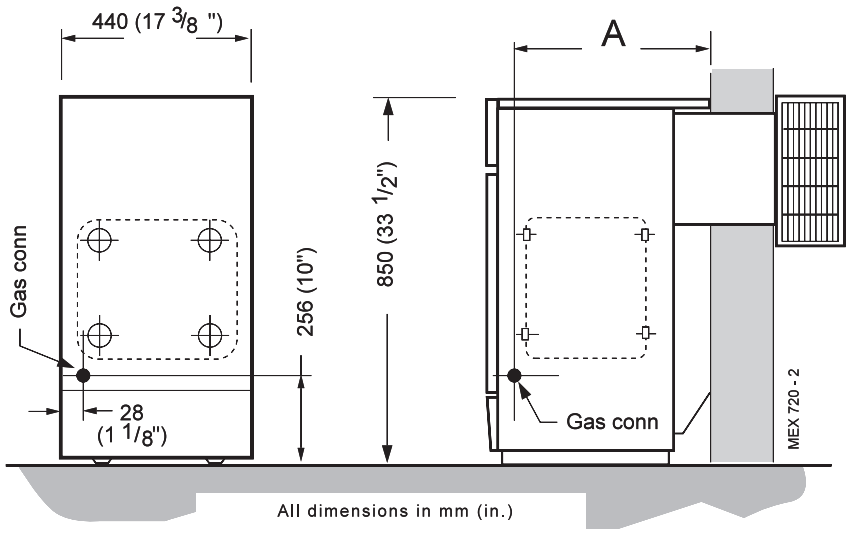

15 WATER CONNECTIONS

1. Connect the system flow and return pipework to the boiler as appropriate. Refer to Frames 3 and 4 for guidance on system design.

   Note. *When the required output exceeds 14.4 kW (49,000 Btu/h) then 28mm (1") pumped flow and return pipes should be used, both to and from the boiler.*

   Gravity connections MUST be at least 28mm (1").

2. Ensure that all valves are open. Fill and vent the system and check for water soundness.

   Notes.

   a. *Isolating valves must be fitted as close to the pump as possible.*

   b. *The boiler is not suitable for use with a direct hot water cylinder.*

16 WATER TREATMENT

These boilers incorporate a cast iron heat exchanger.

IMPORTANT. The application of any other treatment to this product may render the guarantee of **Caradon Ideal Limited** INVALID.

Caradon Ideal Limited recommend Water Treatment in accordance with the *Benchmark* Guidance Notes on Water Treatment in Central Heating Systems.

Caradon Ideal Limited recommend the use of Fernox, GE Betz Sentinel or Salamander water treatment products, which must be used on accordance with the manufacturers instructions.

For further information contact:

Fernox Manufacturing Co. Ltd, Cookson Electronics, Forsyth Road, Sheerwater, Woking, Surrey. GU21 5RZ. Tel. +44 (0) 1799 521133

or

G E Betz Ltd, Sentinel Division, Foundry Lane, Widnes, Cheshire, WA8 8UD. Tel. +44 (0) 151 424 5351

or

Salamander Engineering Ltd, Unit 24, Reddicap Trading Estate, Sutton Coldfield, West Midlands B75 7BU. Tel. +44 (0) 121 378 0952

Notes.

1. *It is most important that the correct concentration of the water treatment products is maintained in accordance with the manufacturers' instructions.*
2. *If the boiler is installed in an existing system any unsuitable additives MUST be removed by thorough cleansing. BS7593:1992 details the steps necessary to clean a domestic heating system.*
3. *In hard water areas, treatment to prevent limescale may be necessary - however the use of artificially softened water is NOT permitted.*
4. *Under no circumstances should the boiler be fired before the system has been thoroughly flushed.*

17 ELECTRICAL CONNECTIONS

WARNING: The appliance MUST be efficiently earthed.

A mains supply of 230 V ~ 50 Hz is required.

The fuse rating should be 3A.

All external controls and wiring MUST be suitable for mains voltage.

Wiring should be in 3-core PVC insulated cable NOT LESS than 0.75 mm^2 (24 x 0.2 mm) to BS.6500, Table 16.

Wiring external to the boiler MUST be in accordance with current I.E.E. (BS.7671) Wiring Regulations and local regulations. For Ireland reference should be made to the current ETCI rules for electrical installations.

Connection must be made in a way that allows complete isolation of the electrical supply - such as a double pole switch, having a 3mm (1/8") contact separation in both poles, or a plug and socket serving only the boiler and system controls.

The means of isolation must be accessible to the user after installation.

This connection should be readily accessible and be made adjacent to the boiler (except in the case of bathroom installations for domestic boilers where the point of connection to the mains MUST be outside of the bathroom.)

18 INTERNAL WIRING

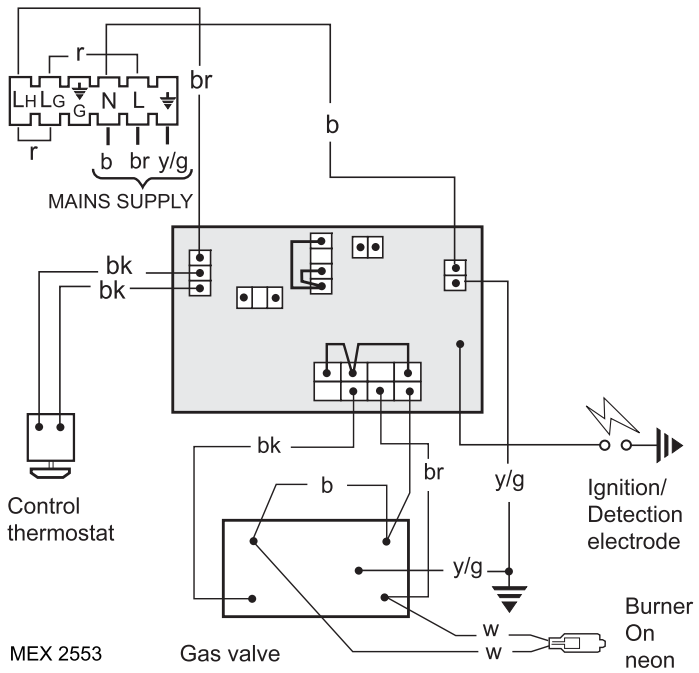

Flow and pictorial wiring diagrams are shown in Frames 19 and 20.

1. Remove the securing screw and lift off the control box cover.
2. Route the electrical leads into the box and wire into the terminal strip, as shown.

Notes.

a. *Secure each lead with one of the cable clamps.*

b. *The mains lead connection MUST be made so that, should the lead slip from its anchorage, the current conductors become taut before the earthing conductor.*

19 EXTERNAL CONTROLS

External wiring must be in accordance with the current I.E.E. (BS 7671) Wiring Regulations. For Ireland reference should be made tot he current ETCI rules for electrical installations.

The wiring diagrams illustrated in Frames 21-23 cover the systems most likely to be fitted to this appliance.

For wiring external controls to the **Mexico Super 4 RS** boiler reference should be made to the system wiring diagrams supplied by the relevant manufacturer, in conjunction with the flow wiring diagram below and also Frame 24.

Difficulty in wiring should not arise, providing the following directions are observed:

1. Controls that switch the system ON and OFF, e.g. a time switch, MUST be wired, in series, in the live mains lead to the boiler.
2. Controls that override an on/off control, e.g. a frost thermostat, MUST be wired into the mains lead, in parallel, with the control(s) to be overridden. Refer to Frame 24.

Flow Wiring Diagram

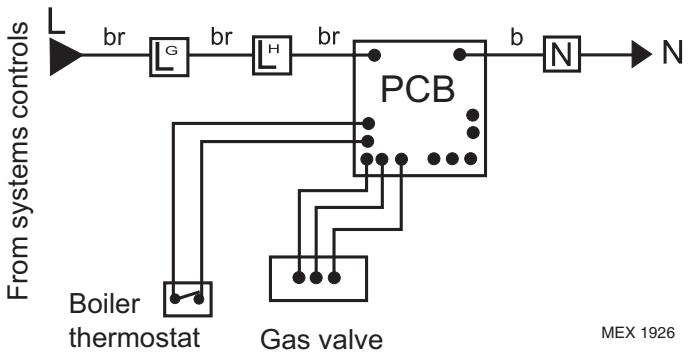

3. If a proprietary system is used, follow the instructions supplied by the manufacturer.

Advice on required modifications to the wiring may be obtained from the component manufacturers.

Note. *If there are no external controls the circulating pump MUST be wired into the control box.*

20 PICTORIAL WIRING

LEGEND

w	white
r	red
bk	black
br	brown
b	blue
y/g	yellow/green

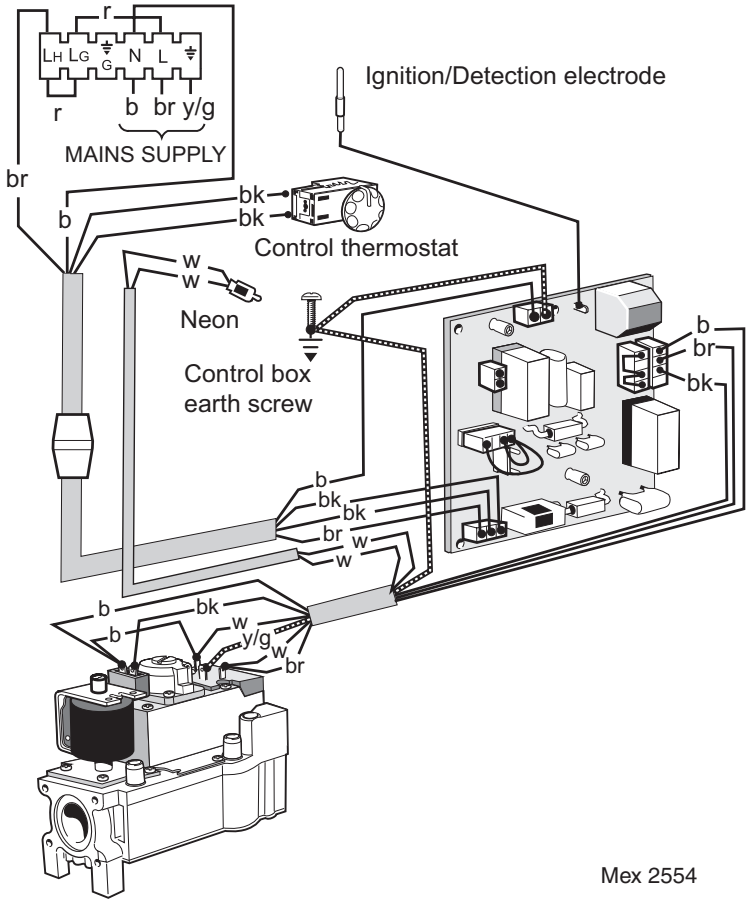

21 MID POSITION VALVE

Pumped only

Notes.

1. *Some earth wires are omitted for clarity. Ensure proper earth continuity when wiring.*
2. *Numbering of terminals on thermostats is specific to the manufacturer indicated.*
3. *This is a fully controlled system - set the boiler thermostat to maximum.*
4. *'Switchmaster Midi' is similar in operation but the wiring differs slightly; see manufacturer's literature.*

	Room Thermostat Terminal			Mid Position valve details	Cylinder Thermostat Terminal		
	1	3	2	HONEYWELL Y PLAN V4073A 1039	1	2	c
TLX 2259 lub 2284	3	1	4	PEGLER 'Unishare' DT 1701 etc.	1	2	3
	1	2	4	LANDIS & GYR 'LGM' SK3 - LT2701	2	3	1
	1	3	-	A. C. L. 679. H. 340.30.UO	1 bk	2 y	3 r
RTE RTM/RTC	1 3	2 1	4 N	DRAYTON Flowshare 2	2	3	1
	1	3	4	SOPAC Centra Share ZV20 - EB MID	1	2	c
	2	1	4	DANFOSS DMV - 3M	n. c.	n. o.	com.
				SWITCHMASTER see note 4			

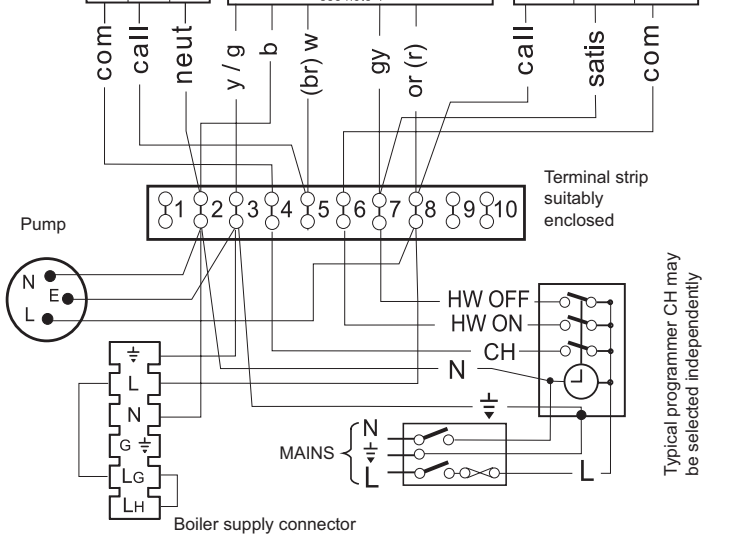

LEGEND

b	blue
bk	black
br	brown
r	red
or	orange
w	white
gy	grey
y/g	yellow/green

22 TWO SPRING CLOSED VALVES

Pumped only

Notes.

1. *Some earth wires are omitted for clarity. Ensure proper earth continuity when wiring.*
2. *Numbering of terminals on thermostats is specific to the manufacturer.*
3. *This is a fully controlled system - set the boiler thermostat to maximum.*
4. *'Switchmaster Autozone' has grey and orange auxiliary switch leads but the GREY (NOT the orange) wire must be connected to the incoming live supply.*

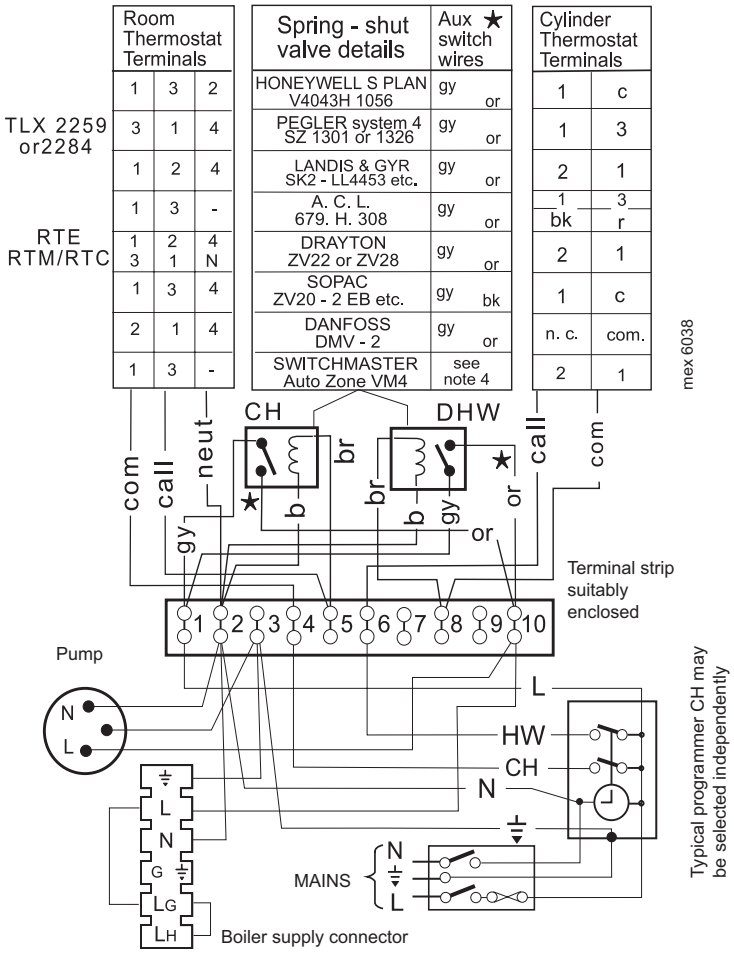

LEGEND

b blue
bk black
br brown
r red
w white
or orange
y/g yellow/green
gy grey

23 HONEYWELL 'C' PLAN

Gravity HW & Pumped CH

Notes.

1. *Some earth wires are omitted for clarity. Ensure proper earth continuity when wiring*
2. *Numbering of terminals on thermostats is specific to the manufacturer.*

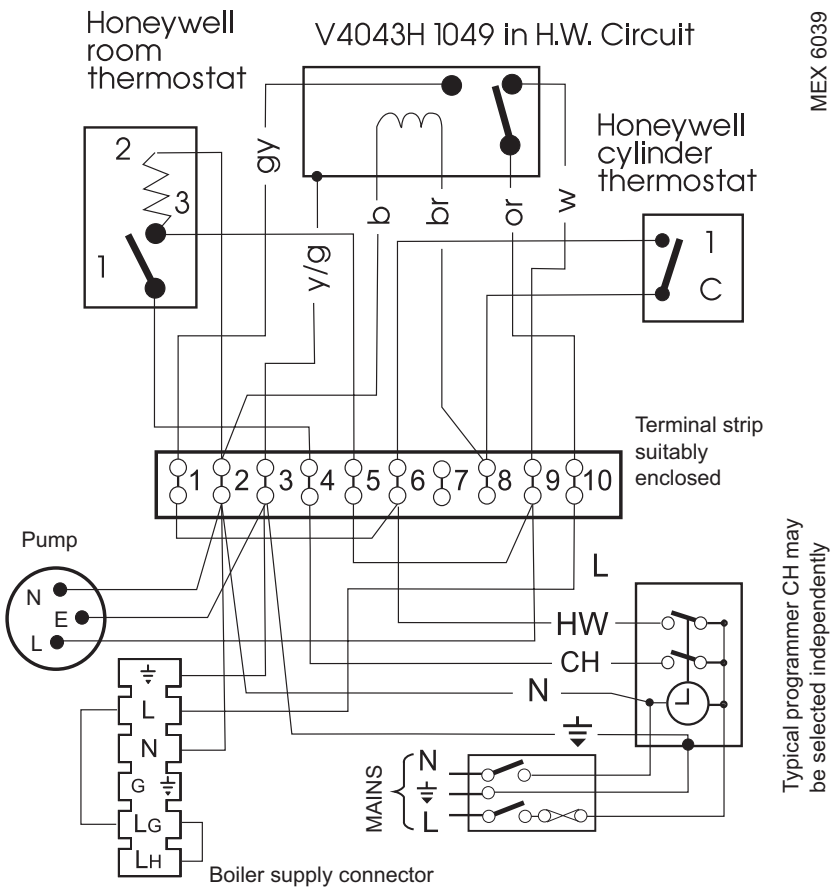

LEGEND

w white
r red
bk black
br brown
or orange
b blue
gy grey
y/g yellow/green

24 FROST PROTECTION

Central heating systems fitted wholly inside the house do not normally require frost protection as the house acts as a 'storage heater' and can normally be left at least 24 hrs. without frost damage. However, if parts of the pipework run outside the house or if the boiler will be left off for more than a day or so then a frost 'stat should be wired into the system.

This is usually done at the programmer, in which case the programme selector switches are set to OFF and all other controls MUST be left in the running position.

The frost 'stat should be sited in a cold place but where it can sense heat from the system.

Wiring should be as shown, with minimal disturbance to other wiring of the programmer.

Designation of the terminals will vary, but the programmer and thermostat manufacturer's leaflets will give full details.

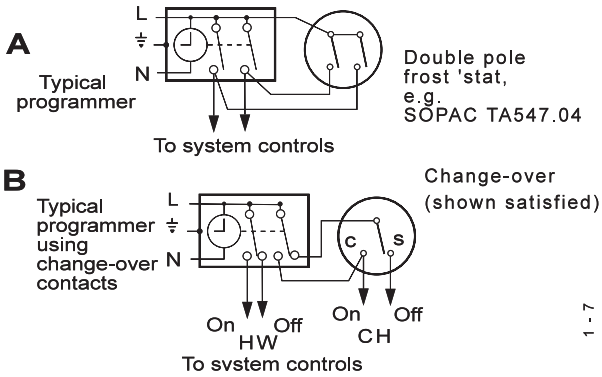

Diagram A shows a double pole frost thermostat, which should suffice for all systems which do not use the OFF terminals of the programmer.

Diagram B shows a 'change-over' frost thermostat, which will cover most systems which do use CH OFF. If, however, on such a system the HW pipework is in an isolated part of the house, a second frost thermostat may be used to protect it.

If in doubt, ask your installer for advice.

25 FITTING THE CASING

1. Offer up the RH side panel, locating it with the peg in the baseplate, and push the panel back.
2. Secure the panel to the baseplate and collector hood.
3. Repeat steps 1 and 2 to refit the LH side panel.
4. Place the top panel and push back.
5. Secure the top panel to the side panels.

IMPORTANT. Wiring within the boiler casing must be neatly secured with the cable straps provided and MUST NOT be allowed to touch the burner front plate, or the cleanout cover and the collector hood.

6. Reconnect the in-line connector to the PCB lead and the Burner On neon cable to the back of the control panel.

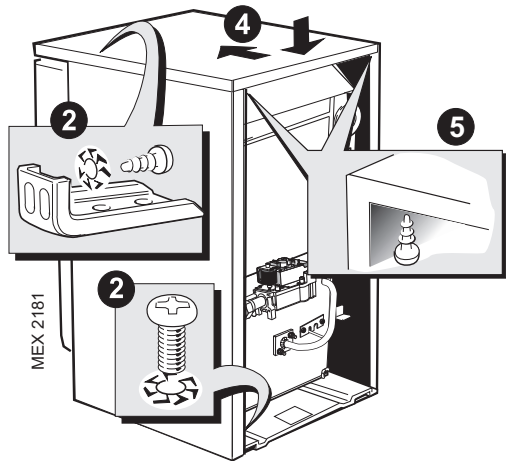

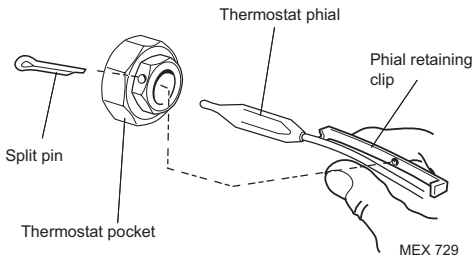

7. Replace the control box cover and refit the control panel using the screws previously removed.
8. Insert the thermostat phial and phial retaining clip into the thermostat pocket. Take care not to kink the thermostat capillary as it is unwound and secure it with the split pin, as shown.
9. Refit the grille assembly

26 COMMISSIONING AND TESTING

The Benchmark Log Book or equivalent self certification should be completed and signed to demonstrate compliance with Building Regulations.

A. ELECTRICAL INSTALLATION

1. Checks to ensure electrical safety should be carried out by a competent person.
2. ALWAYS carry out preliminary electrical system checks, i.e. earth continuity, polarity, resistance to earth and short circuit using a suitable test meter.

B. GAS INSTALLATION

1. The whole of the gas installation, including the meter, MUST be inspected and tested for soundness, and purged in accordance with the recommendations of BS. 6891. In IE refer to I.S.813:2002.
2. Purging air from the gas installation may be expedited by loosening the union on the gas service cock on the boiler and purging until gas is detected.
3. Retighten the union and check for gas soundness.

WARNING. Whilst effecting the required gas soundness test and purging air from the gas installation, open all windows and doors, extinguish naked lights and **DO NOT SMOKE.**

27 INITIAL LIGHTING

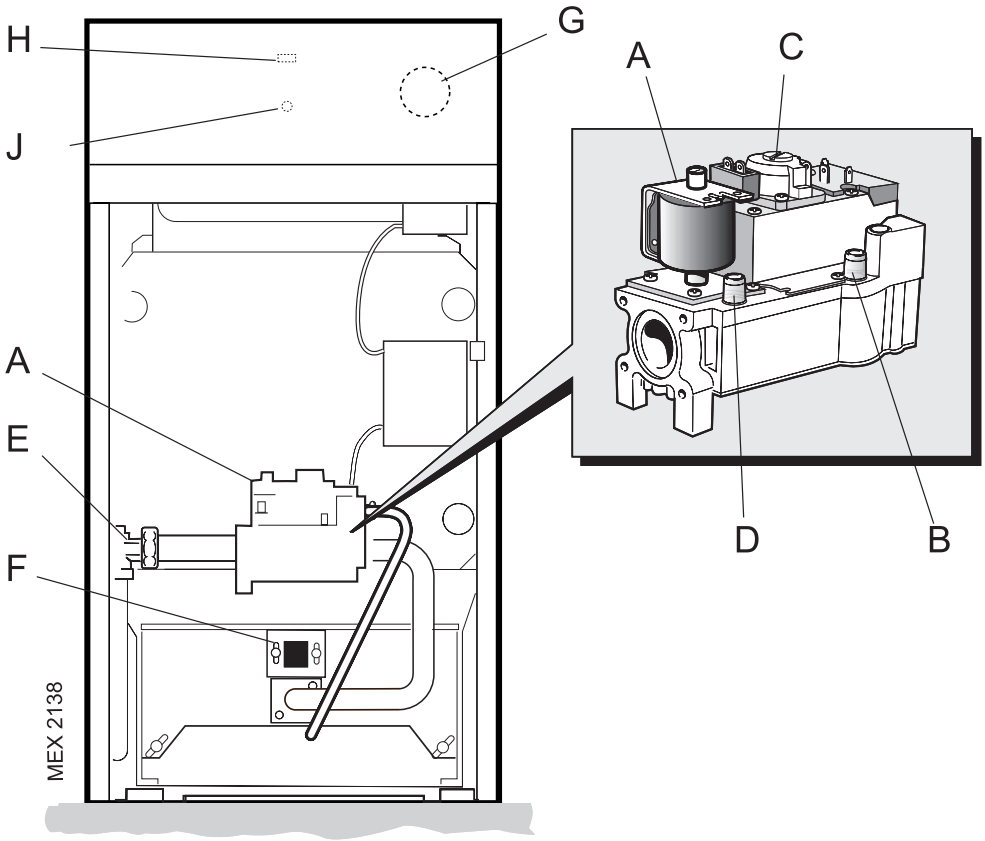

LEGEND

A. Gas control valve.
B. Burner pressure test point.
C. Main burner pressure adjuster.
D. Inlet pressure test point.
E. Gas service cock.
F. Sightglass.
G. Boiler thermostat knob.
H. Main burner 'On' neon.
J. Overheat thermostat reset button (optional).

TO LIGHT THE BOILER

1. Check that all the drain cocks are closed and any valves in the flow and return are open.

2. Check that the gas service cock (E) is OPEN and the boiler mains on/off switch is OFF.

3. Slacken the screw in the burner pressure test point (B) and connect a gas pressure gauge via a flexible tube.

4. Switch the electricity supply ON and check that all external controls are calling for heat.

5. Set the boiler thermostat knob (G) to position 6. The pilot solenoid valve will open and the intermittent spark commence, continuing until the pilot is established. The main burner will then cross-light smoothly. If this sequence does not occur, refer to the Fault Finding section.

6. Test for gas soundness around ALL boiler gas components using leak detection fluid.

7. Operate the boiler for 10 minutes to stabilise the burner temperature.

8. The boiler is preset at the factory to its nominal rating. If the burner setting pressure requires adjustment remove the sealing cap and turn the adjusting screw clockwise to increase/anticlockwise to decrease the pressure until the required burner pressure is achieved. Refer to Table 2, page 2. Refit the sealing cap.

9. Set the boiler mains on/off switch to OFF.

10. Remove the pressure gauge and tube. Retighten the sealing screw in the pressure test point.

11. Turn ON and check for gas soundness at the pressure test point.

28 GENERAL CHECKS

Make the following checks for correct operation:

1. Turn the boiler thermostat OFF and ON to check that the main burner is extinguished and relit in response.
2. Check that the programmer, if fitted, and all other system controls function correctly.

   Operate each control separately and check that the main burner or circulating pump (as the case may be) responds.
3. **Water circulation System**
   - **a.** With the system HOT, examine all water connections for soundness.
   - **b.** With the system still hot, turn off the gas, water and electricity supplies to the boiler and drain down, in order to complete the flushing process.
   - **c.** Refill and vent the system, clear all air locks and again check for water soundness.
   - **d.** Balance the system.
4. Finally, set the controls to the user's requirements, refit the lower front panel and close the controls door.

Notes.

- *If an optional programmer kit is fitted refer to the separate Programmer Kit Installation Instructions and Programmer Kit User's Instructions.*
- *The temperatures quoted below are approximate and vary between installations.*

Thermostat Knob Setting	Flow Temperature °C	°F
2	60	140
3	66	150
4	71	160
5	77	170
6	82	180

WARNING. **The boiler must not be operated with the casing removed**

29 HANDING OVER

After completing the installation and commissioning of the system the installer should hand over to the householder by the following actions:

1. Hand the User's Instructions to the householder and explain his or her responsibilities under the current Gas Safety (Installation and Use) Regulations or rules in force.
2. Draw attention to the lighting instruction label affixed to the inside of the controls door.
3. Explain and demonstrate the lighting and shutting down procedures.
4. The operation of the boiler and the use and adjustment of ALL system controls should be fully explained to the householder, to ensure the greatest possible fuel economy consistent with household requirements of both heating and hot water consumption.

   Advise the User of the precautions necessary to prevent damage to the system and to the building in the event of the system remaining inoperative during frosty conditions.
5. Explain the function and the use of the boiler thermostat and external controls.
6. Explain and demonstrate the function of time and temperature controls, radiator valves etc., for the economic use of the system.
7. If an optional Programmer Kit is fitted then draw attention to the Programmer Kit User's Instructions and hand them to the householder.
8. **After installation, commissioning and customer hand-over please complete the benchmark appliance log book and leave this with the customer. For IE, it is necessary to complete a "Declaration of Conformity" to indicate compliance to I.S. 813:2002.**
9. Stress the importance of regular servicing by a CORGI registered installer and that a comprehensive service should be carried out AT LEAST ONCE A YEAR. In IE servicing work must be carried out by a Competent Person.

30 SCHEDULE

To ensure the continued safe and efficient operation of the appliance it is recommended that it is checked at regular intervals and serviced as necessary. The frequency of servicing will depend upon the installation condition and usage but should be carried out at least annually .

It is the law that any service work must be carried out by a CORGI registered installer. In IE servicing work must be carried out by a Competent Person.

a. Light the boiler and carry out a pre-service check, noting any operational faults.

b. Clean the main burner.

c. Clean the heat exchanger.

d. Clean the main injectors.

e. Check that the flue terminal is unobstructed and that the flue system, including the flue cleanout cover, is sealed correctly.

f. If the appliance has been installed in a compartment, check that the ventilation areas are clear.

The servicing procedures are covered more fully in Frames 31-35 and MUST be carried out in sequence.

WARNING. Always turn OFF the gas supply at the gas service cock and switch OFF and DISCONNECT the electrical supply to the appliance *BEFORE SERVICING.*

IMPORTANT. After completing the servicing or exchange of components always test for gas soundness and carry out functional checks as appropriate.

WARNING. **The boiler must not be operated with the casing removed**

31 BOILER CASING REMOVAL

1. Remove the 2 screws and lift off the lower front panel.

2. Remove the 2 screws and lift off the grille assembly.

3. Disconnect the in-line connector on the PCB lead.

4. Remove the Burner On neon cable from the back of the control panel.

5. Remove the thermostat phial from the pocket as shown.

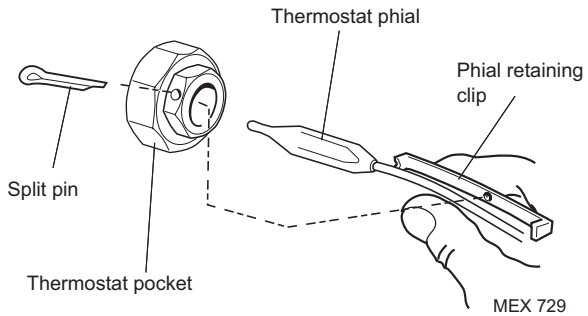

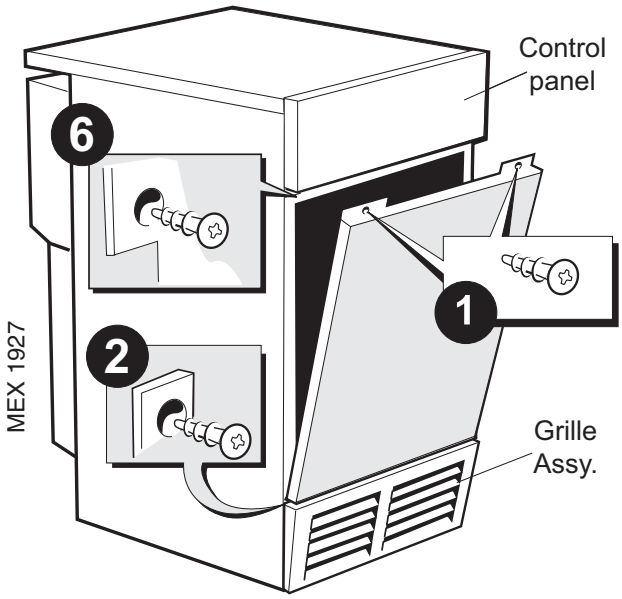

6. Remove the 2 screws securing the control panel and pull down to release the tabs from under the top panel.

7. If the boiler is not fitted under a work top, access for flue cleaning will be improved by removing the top panel.

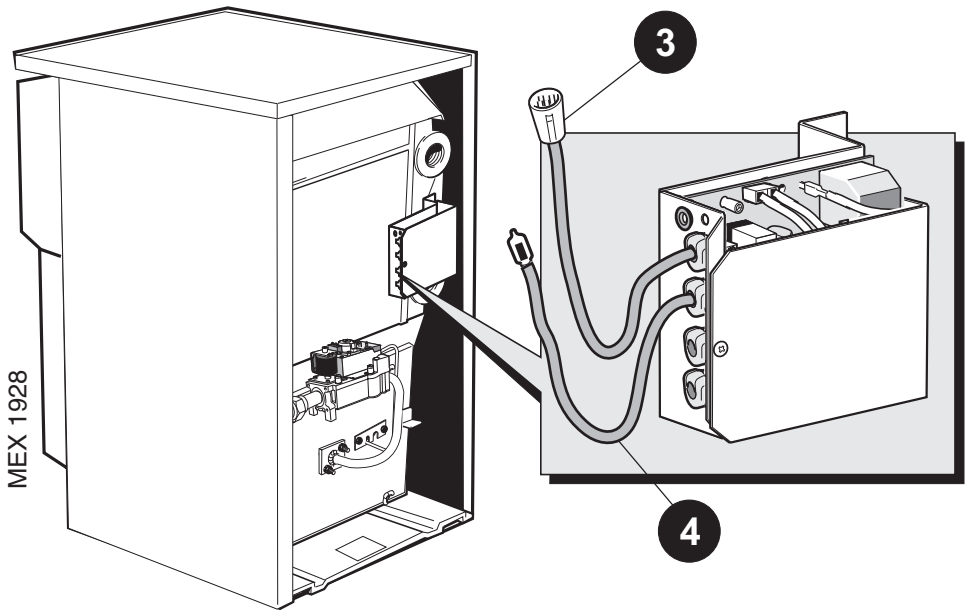

32 BURNER AND CONTROLS ASSEMBLY REMOVAL

1. Remove the 2 screws, lift off the front panel and remove the grille assembly. Refer to Frame 31.
2. Disconnect the electrical leads from the gas valve.
3. Disconnect the ignition lead from the PCB.
4. Undo the gas cock union. Remove the 4 wing nuts and withdraw the burner and controls assembly, complete, from the boiler.
5. Place on a convenient working surface.

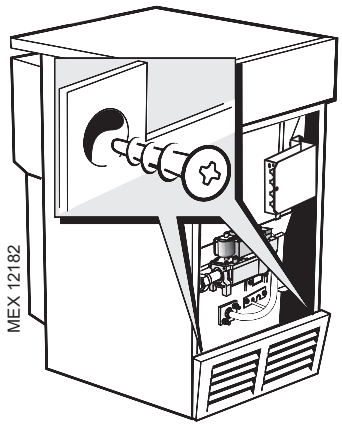

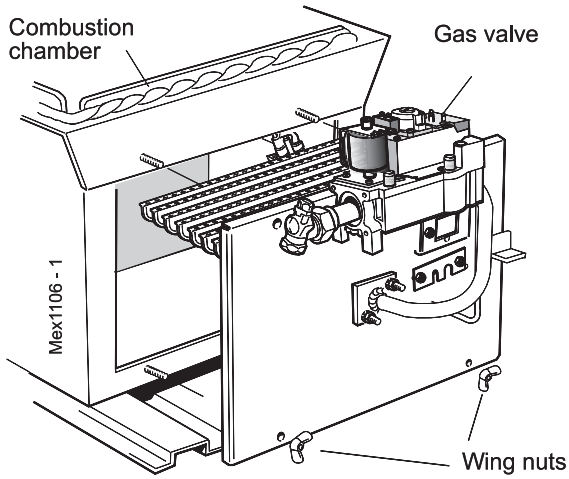

33 CLEANING THE BURNER ASSEMBLY

1. Brush off any deposits that may have fallen onto the burner head (ensuring that the flame ports are unobstructed) and remove any debris that may have collected.

   Note. *Brushes with metallic bristles MUST NOT be used.*
2. Remove the main burner injector .Check, clean or replace, as required.
3. Refit the injector, using an approved jointing compound.
4. Inspect the pilot burner and ignition electrode; ensure they are clear and in good condition.

   Check that:

   a. The pilot burner is clean and unobstructed.

   b. The ignition electrode is clean and undamaged.

   c. The ignition lead is in good condition and securely connected.

   d. The spark gap is correct. Refer to Frame 44.
5. Clean or renew components as necessary.

34 CLEANING THE FLUEWAYS

1. Remove the 2 wing nuts and lift off the cleanout cover.
2. Lift out the flue baffles.
3. Remove all loose deposits from the heat exchanger, especially from between the fins, using a suitable brush. Remove all debris from the combustion chamber base
4. Check that the flue outlet duct is unobstructed.
5. Refit the flue baffles. Refer to Frame 10.

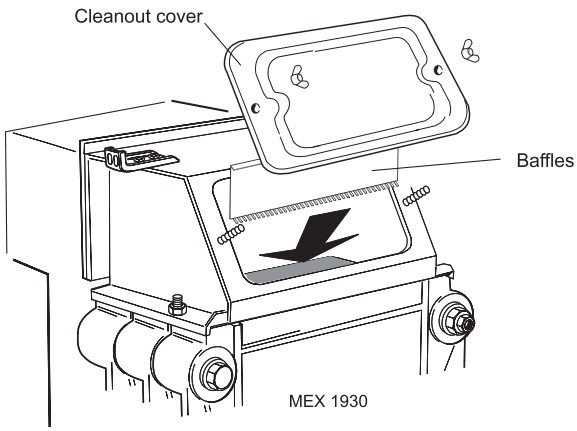

35 REASSEMBLY

Reassemble the boiler in the following order :

1. Refit the flue cleanout cover, renewing any damaged or deteriorating sealing gasket.
2. Refit the casing top panel.
3. Reconnect the electrical wiring and refit the control panel, ensuring that the thermostat phial and phial retaining clip are correctly located in the thermostat pocket and secured by the split pin. Refer to Frame 31.
4. Check the sightglass in the front plate - clean or renew as necessary.
5. Renew any damaged or deteriorating front plate gasket.
6. Refit the burner and controls assembly.
7. Reconnect the gas service cock.
8. Refit the grille assembly.

36 GAS PRESSURE ADJUSTMENT

1. Pilot Pressure

Pilot adjustment is factory set to maximum and no adjustment is possible.

2. Main Burner Pressure

After servicing, reference should be made to Table 2, which quotes details of the rated output with the related burner pressure and heat input. Any required adjustments should be made using the pressure adjustment screw. Refer to Frame 27, 'Initial Lighting.

Refit the lower front panel

REPLACEMENT OF PARTS

37 GENERAL

When replacing any component:

1. Isolate the electricity supply.
2. Undo the 2 screws and remove the lower front panel grille assembly.
3. Turn off the gas supply at the boiler.

For replacement of programmer units refer to the separate Programmer Kit Instructions.

38 SIGHTGLASS REPLACEMENT

1. Refer to Frame 37.
2. Unfasten the 2 M5 hexagon nuts and washers. Remove the assembly from the front plate.
3. Fit the new sightglass and reassemble, as shown.
4. Retighten the 2 M5 hexagon nuts to ensure an airtight seal. *Do NOT overtighten.*

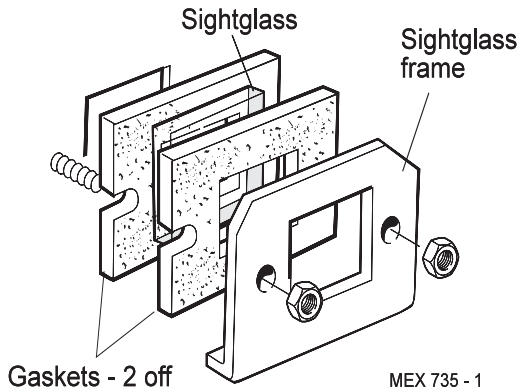

39 PILOT BURNER REPLACEMENT

1. Refer to Frame 37.
2. Undo the 2 screws, lift off the front panel and remove the grille assembly. Refer to Frame 31.
3. Disconnect the electrical leads from the gas valve.
4. Disconnect the ignition lead from the PCB.
5. Undo the gas cock union. Remove the 4 wing nuts and withdraw the burner and controls assembly, complete, from the boiler.
6. Prise the retaining clip out of the groove in the electrode, using a small screwdriver, and withdraw the electrode.

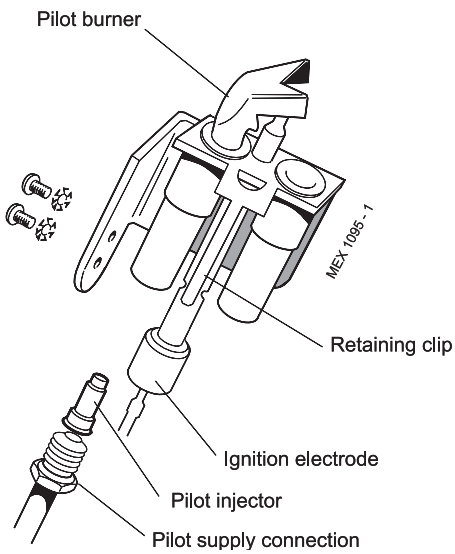

7. Undo the pilot supply pipe connection and ease clear of the pilot burner. DO NOT LOSE the pilot injector, which is a push-fit in the pilot burner housing.
8. Remove the 2 securing screws and washers, and withdraw the pilot burner.
9. Fit the new pilot burner and reassemble in reverse order, ensuring that:
   - **a.** The injector is in position when refitting the pilot supply.
   - **b.** A gas-tight joint is made.
   - **c.** The spark gap is correct. Refer to Frame 44.

40 CONTROL THERMOSTAT REPLACEMENT

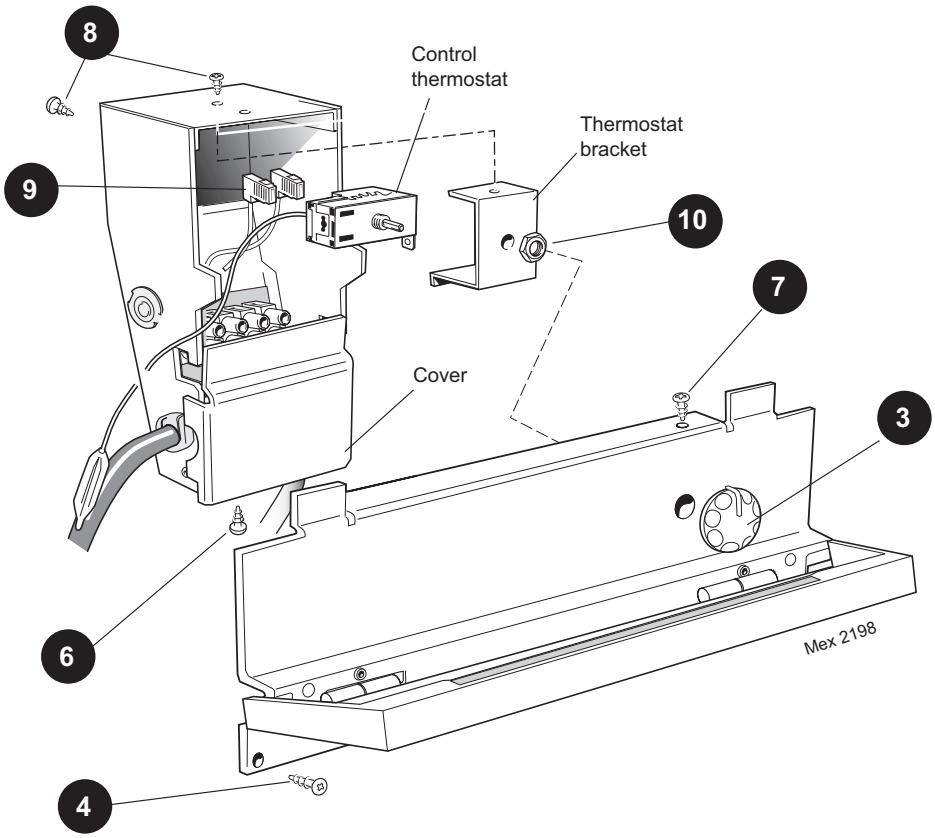

1. Refer to Frame 37.
2. Remove 2 screws and lift off the front lower panel. Refer to Frame 31.
3. Pull off the thermostat knob.
4. Remove the 2 screws and pull down the control panel tabs clear of the top panel.
5. Remove the thermostat phial from the pocket. Refer to Frame 31.
6. Remove the bottom screw and remove the cover.
7. Remove the top screw and ease the control box off the control panel.
8. Remove the 2 screws to release the thermostat bracket.
9. Disconnect the electrical leads.
10. Unscrew the thermostat nut to withdraw the thermostat.
11. Fit the new thermostat and reassemble in reverse order.

41 IGNITION LEAD REPLACEMENT

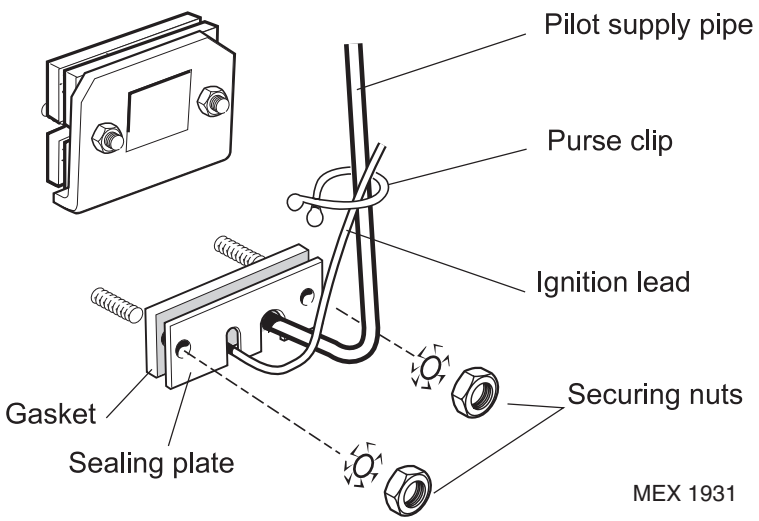

1. Refer to Frame 37.
2. Remove the 2 screws, lift off the front panel and remove the grille assembly . Refer to Frame 31.
3. Disconnect the electrical leads from the gas valve.
4. Disconnect the ignition lead from the PCB.
5. Undo the gas cock union. Remove the 4 wing nuts and withdraw the burner and controls assembly, complete, from the boiler.
6. Remove the purse clip.
7. Undo the 2 securing nuts and washers. Remove the sealing plate and gasket.
8. Disconnect the ignition lead from the base of the electrode and the PCB, and withdraw the lead.
9. Fit the new lead and reassemble in reverse order.

42 CONTROL PANEL REPLACEMENT

1. Refer to Frame 37.
2. Remove the 2 screws and lift off the lower front panel. Refer to Frame 31.
3. Pull off the thermostat knob.
4. Disconnect the in-line electrical connector between the control box and PCB box.
5. Unscrew the 2 screws and pull down the control panel so that the 2 tabs clear the top panel.
6. Remove the thermostat phial from the pocket. Refer to Frame 31.
7. Remove the bottom screw and remove the cover from the control box.
8. Remove the top screw and ease the control box off the control panel.
9. Disconnect the mains electrical supply from the terminal strip and release from its clamp.
10. Assemble new control box and panel and fit to the casing in reverse order.
11. Insert control thermostat phial into pocket and secure with the split pin.

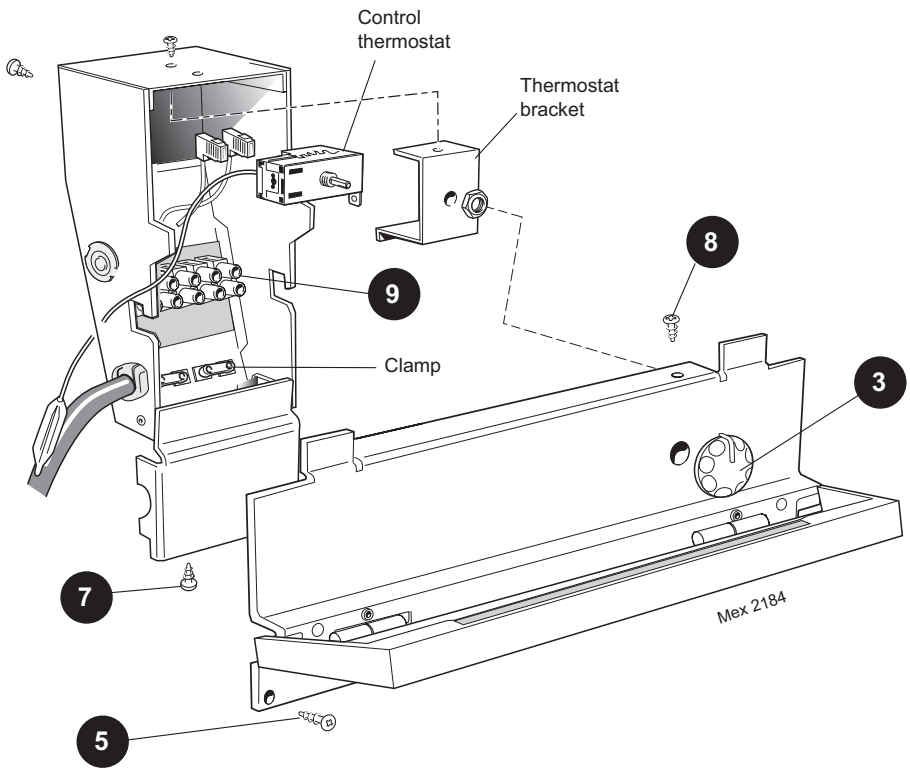

12. Refit the in-line electrical connector between the control box and the PCB box.
13. Remove control box cover and remake electrical supply connections to the terminal strip.

43 OVERHEAT THERMOSTAT REPLACEMENT (if fitted)

1. Refer to Frame 37.
2. Remove the 2 screws and lift off the lower front panel. Refer to Frame 31.
3. Slacken the screw at the thermostat pocket and withdraw the phial from the pocket.
4. Remove the thermostat retaining nut and withdraw the thermostat from the control panel.
5. Transfer the electrical leads from the old thermostat to the replacement (polarity is not important).
6. Fit the new thermostat, ensuring that the alignment peg on the thermostat sits in the small hole adjacent to the main fixing hole, and reassemble in reverse order.
7. Replace the lower front panel and secure with the 2 fixing screws.
8. Check the operation of the boiler.

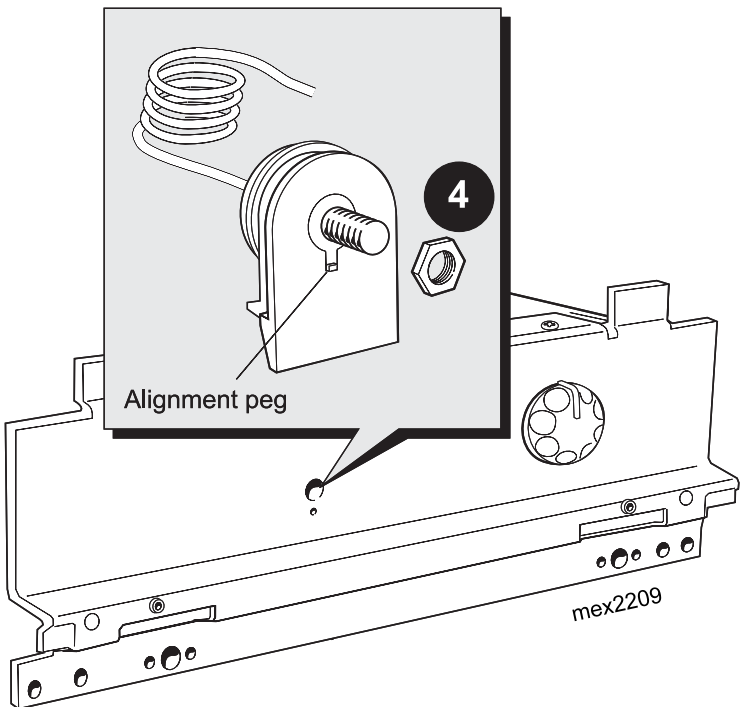

44 IGNITION ELECTRODE REPLACEMENT

1. Refer to Frame 37.
2. Remove the 2 screws, lift off the lower front panel then remove the grille assembly. Refer to Frame 31.
3. Disconnect the electrical leads from the gas valve.
4. Disconnect the ignition lead from the PCB.

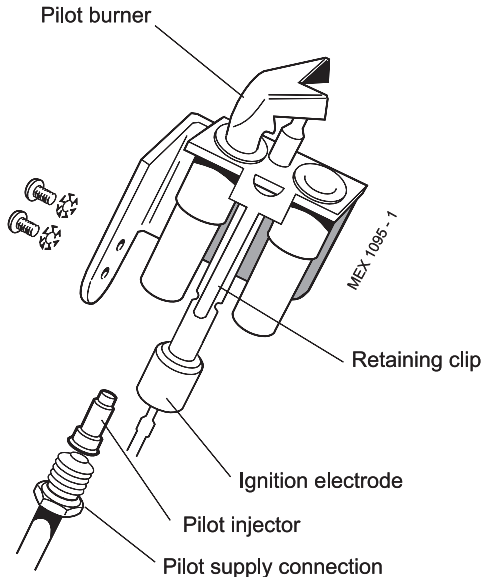

Detail of pilot flame length and spark gap

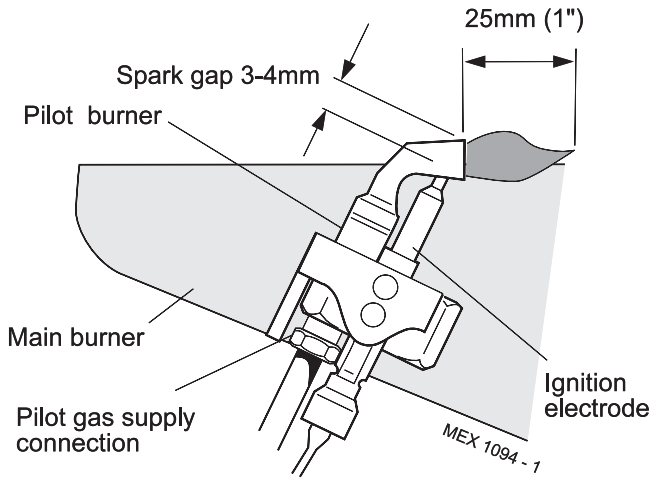

5. Undo the gas cock union. Remove the 4 wing nuts and withdraw the burner and controls assembly, complete, from the boiler.
6. Prise the retaining clip out of the groove in the electrode, using a small screwdriver, and withdraw the electrode.
7. Push in the new electrode until the retaining clip locates in the groove and reassemble in reverse order.

45 MAIN BURNER REPLACEMENT

1. Refer to Frame 37.
2. Remove the 2 screws, lift off the lower front panel then remove the grille assembly. Refer to Frame 31.
3. Disconnect the electrical leads from the gas valve.
4. Disconnect the ignition lead from the PCB.
5. Undo the gas cock union. Remove the 4 wing nuts and withdraw the burner and controls assembly, complete, from the boiler.
6. Remove the 2 screws securing the pilot burner and pull the assembly clear of the main burner.
7. Remove the 2 nuts and washers securing the burner to the front plate and manifold. Withdraw the burner.
8. Fit the new burner and reassemble in reverse order, taking care not to damage the main burner injector which is screwed into the burner manifold.

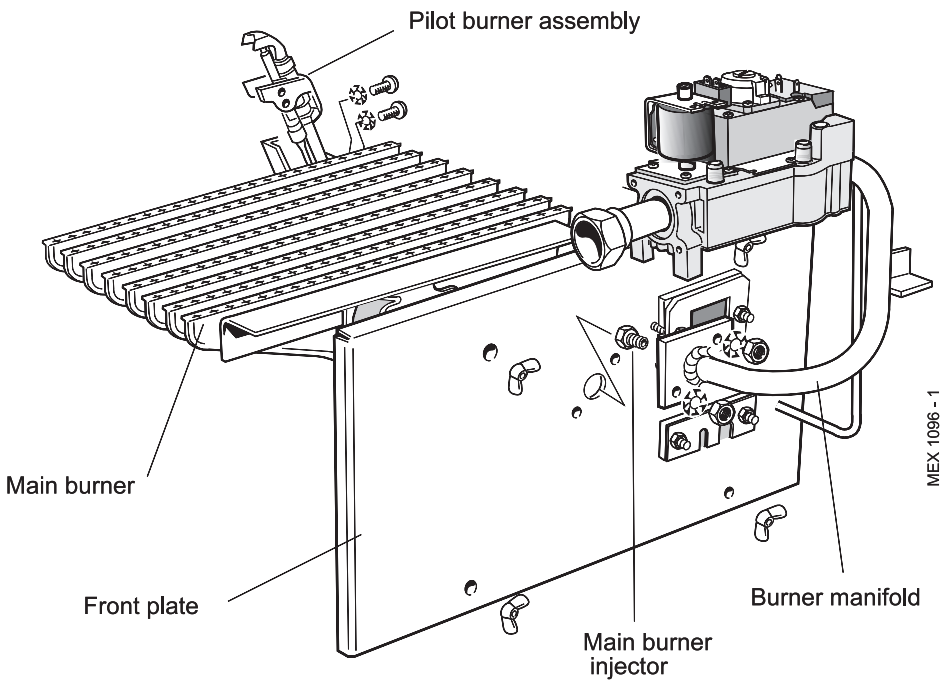

46 MAIN BURNER INJECTOR REPLACEMENT

1. Refer to Frame 37.
2. Remove the 2 screws, lift off the lower front panel then remove the grille assembly. Refer to Frame 31.
3. Disconnect the electrical leads from the gas valve.
4. Undo the gas cock union. Remove the 4 wing nuts and withdraw the burner and controls assembly, complete, from the boiler.
5. Disconnect the ignition lead from the PCB.
6. Undo the pilot supply connection.
7. Undo the manifold securing nuts and remove the manifold from the front plate.
8. Unscrew the burner injector from the manifold.
9. Fit the new injector, using an approved jointing compound, and reassemble in reverse order.

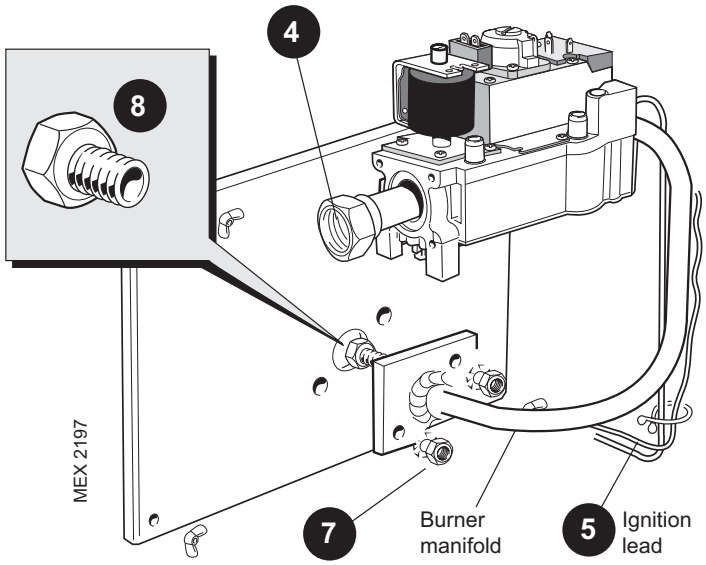

47 GAS VALVE REPLACEMENT

1. Refer to Frame 37.
2. Remove the 2 screws, lift off the lower front panel then remove the grille assembly. Refer to Frame 31.
3. Disconnect the electrical leads from the gas valve.
4. Disconnect the ignition lead from the PCB.
5. Undo the gas cock union. Remove the 4 wing nuts and withdraw the burner and controls assembly, complete, from the boiler.
6. Undo the pilot supply connection.
7. Unscrew the gas inlet pipe from the valve.
8. Remove the 4 securing screws and withdraw the valve from the burner manifold.
9. Fit the new gas valve, ensuring that:
   - **a.** The valve is fitted the correct way round - an arrow engraved on the valve indicates the direction of flow.
   - **b.** The sealing 'O' ring supplied with the valve is correctly fitted at the outlet flange.
   - **c.** An approved jointing compound is used when reconnecting the gas inlet pipe.

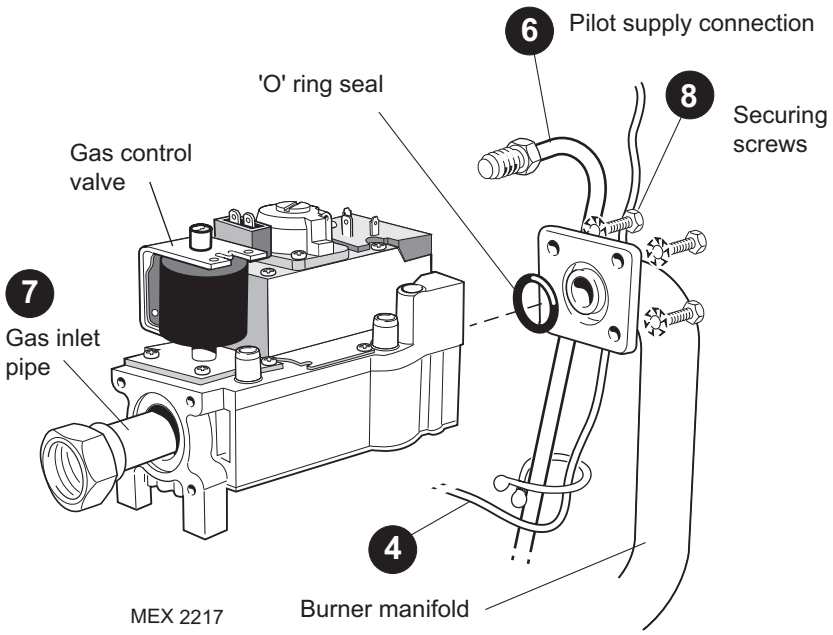

48 PRINTED CIRCUIT BOARD (PCB) REPLACEMENT

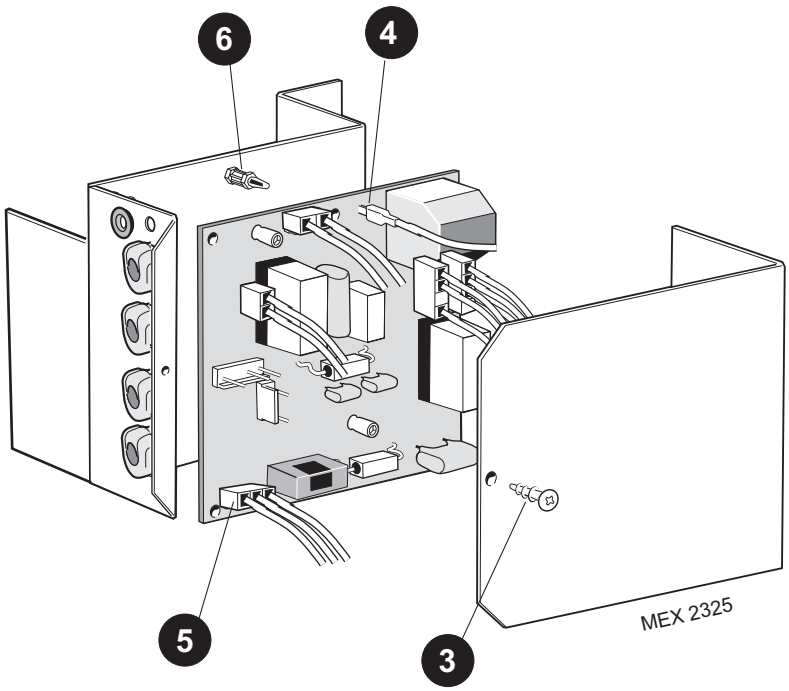

1. Refer to Frame 37.
2. Remove the 2 screws and lift off the lower front panel. Refer to Frame 31.
3. Undo the PCB cover fixing screw and remove the cover.
4. Remove the HT lead from the PCB
5. Remove the 6 push-in connectors from the PCB.
6. Compress the barbs on the PCB stand-offs to release the PCB from the box
7. Fit the new PCB and reassemble in reverse order.
8. Refit the boiler casing.
9. Check the operation of the boiler.

FAULT FINDING

Before attempting any electrical fault finding ALWAYS carry out preliminary electrical system checks, i.e. earth continuity, polarity and resistance to earth using a suitable meter.

Detailed instructions on the cleaning and adjustment or replacement of faulty components are contained in the 'Servicing' section of this publication.

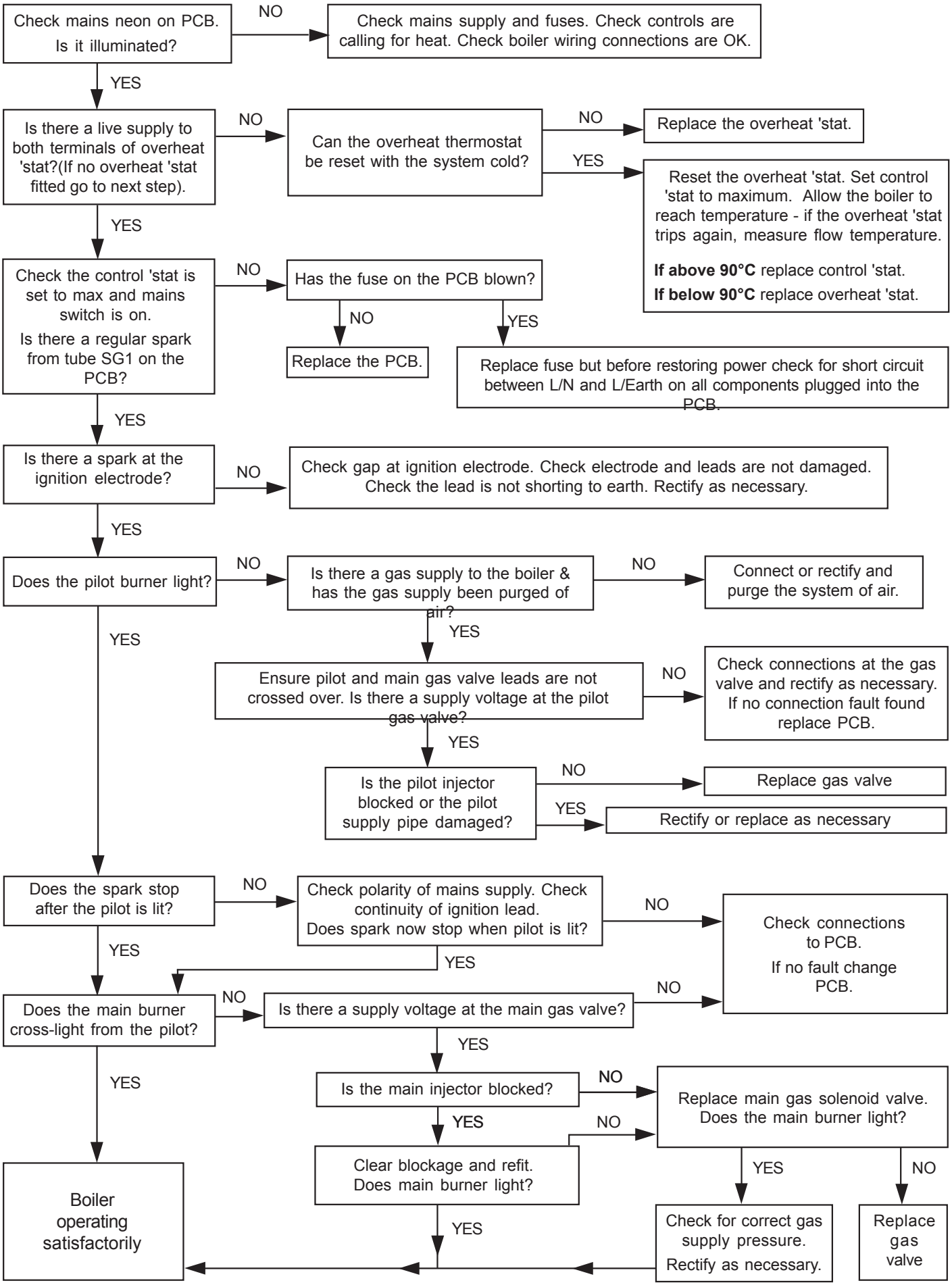

SHORT LIST OF PARTS

The following are parts commonly required as replacement components, due to damage or expendability. Their failure or absence is likely to affect safety or performance of this appliance.

The list is extracted from the British Gas List of Parts, which contains all available spare parts.

The full list is held by British Gas, **Caradon Ideal Limited** distributors and merchants.

When ordering spares please quote:

1. Boiler model
2. Appliance G.C. number
3. Description
4. Quantity
5. Product no.

When replacing any part on this appliance, use only spare parts that you can be assured conform to the safety and performance specification that we require. Do not use reconditioned or copy parts that have not been clearly authorised by Ideal Boilers.

Key No.	G.C. Part No.	Description		Qty.	Product No.
17	319 494	Sightglass assembly.		1	079 334
20	385 876	Main burner	RS440	1	113 187
	385 877	Main burner	RS450 & RS460	1	113 188
	382 957	Main burner	RS470	1	013 857
		Main burner injector			
21	398 051	Main burner injector	RS440	1	004 190
	398 055	Main burner injector	RS450	1	003 361
	398 059	Main burner injector	RS460	1	004 305
	398 064	Main burner injector	RS470	1	004 049
22	382 944	Pilot burner with injector (Key No. 23)		1	079 355
23	381 656	Pilot injector		1	003 825
24		Gas valve assembly		1	153 726
26	397 945	Ignition electrode - with HT lead		1	004 713
27	E26 397	HT lead - 900 mm		1	058 826
30		Automatic ignition PCB		1	171 450
66	E05 070	Thermostat		1	151 903
67	308 557	Thermostat knob		1	111 904

48 SHORT PARTS

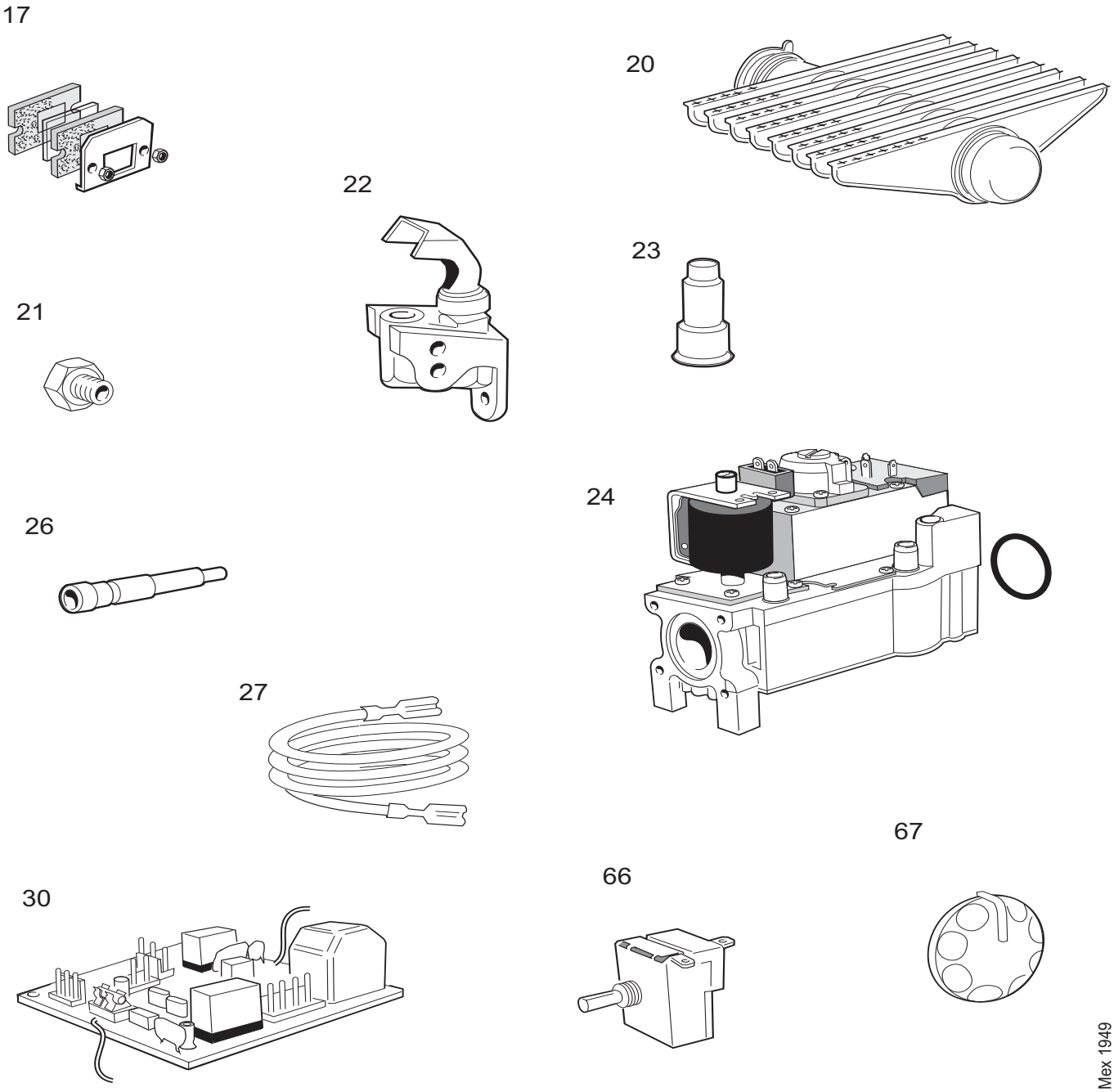

49 BOILER CASING ASSEMBLY

Legend

46. Baseplate.

62. Casing complete.

63. Controls panel complete.

73. Side panel.

75. Casing front panel.

76. Top panel.

77. Grille assy.

78. Casing fixing pack (not shown)

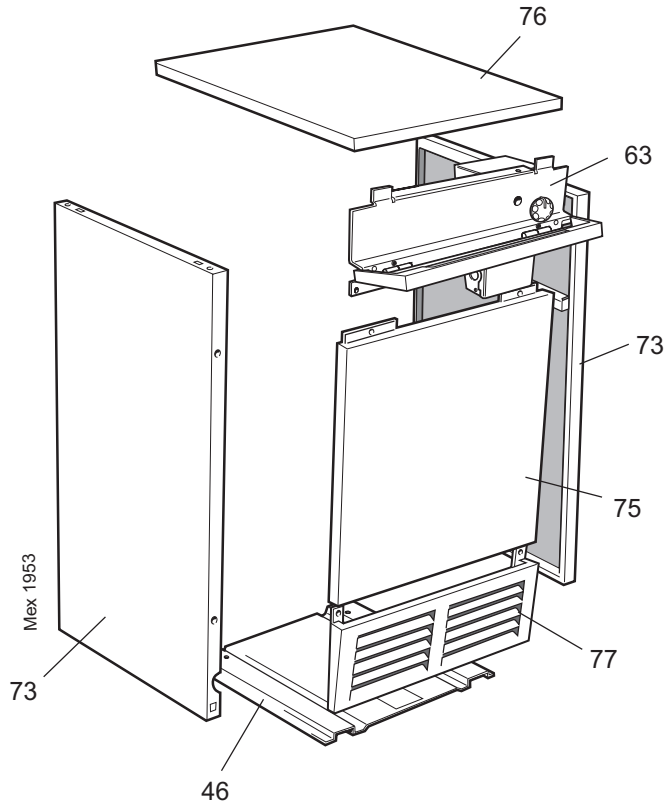

50 BOILER CONTROL PANEL - Exploded View

Legend

63. Control panel complete.

65. Control box .

66. Control thermostat.

67. Control thermostat knob.

71. Control front panel (door).

72. Magnetic strip.

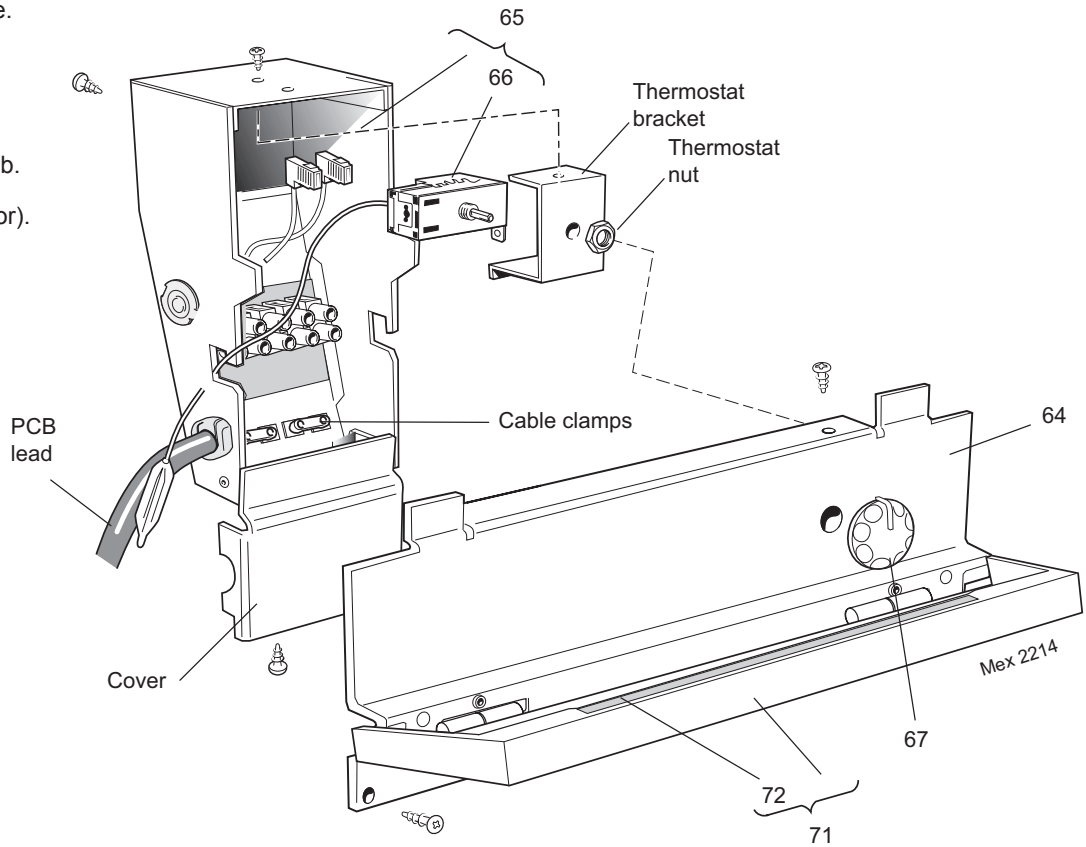

51 BURNER AND CONTROLS ASSEMBLY - Exploded View

Legend

16. Front plate assy.

17. Sightglass assy.

18. Burner manifold assy.

19. Pilot burner pipe

20. Main burner

21. Main burner injector

22. Pilot burner assy.

24. Gas valve

25. 'O' ring.

26. Ignition electrode

27. HT lead

28. Gas cock.

50. Sealing plate gasket.

51. Sealing plate.

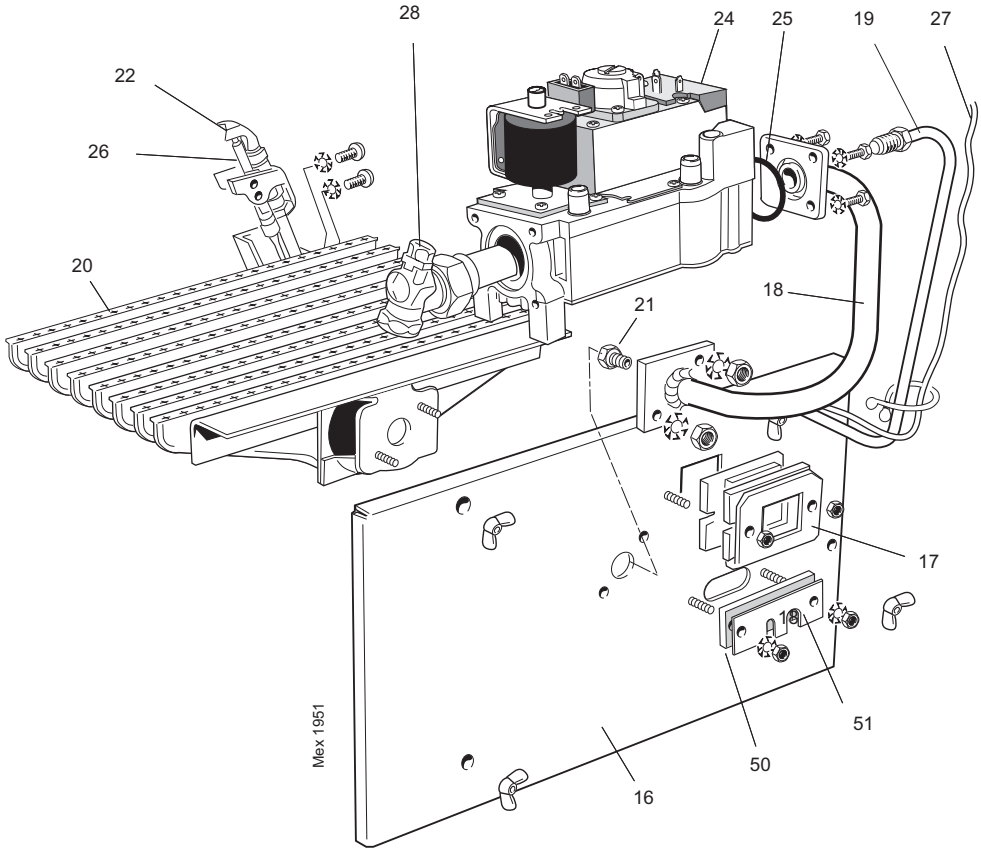

52 PCB BOX - Exploded View

Legend

29. PCB chassis assy.

30. PCB sub-assy.

33. PCB support.

37. PCB cover.

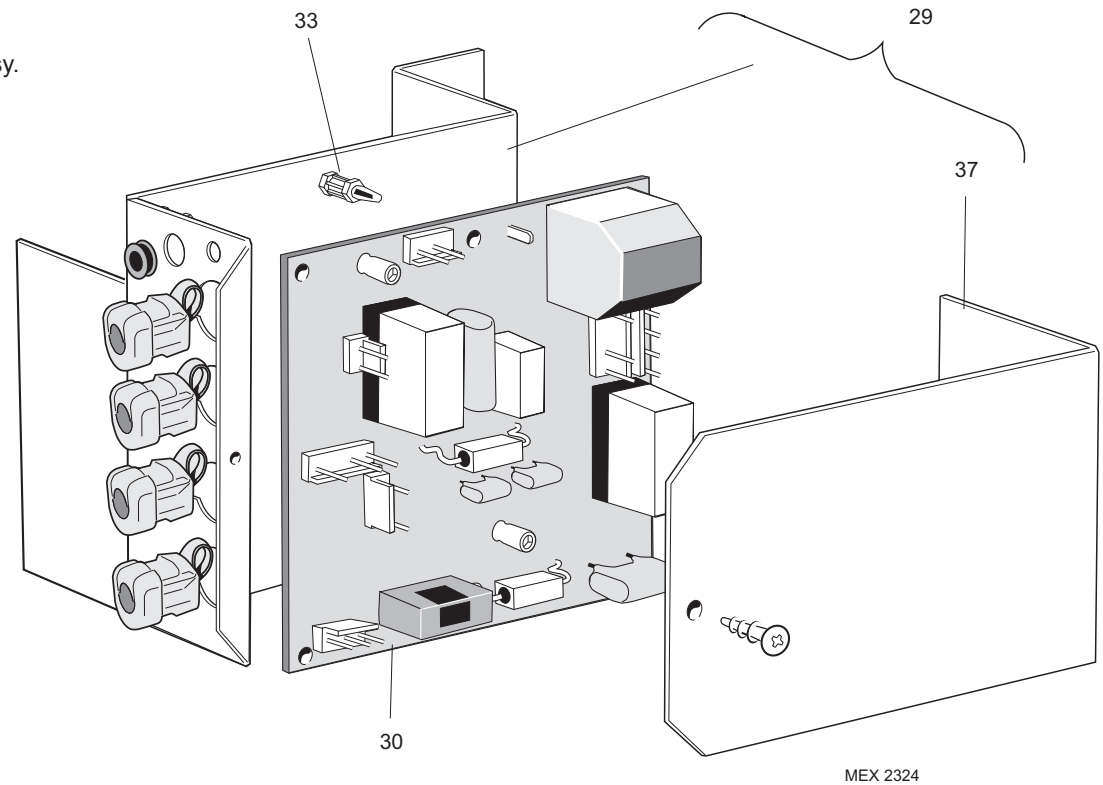

benchmark™

The code of practice for the installation, commissioning & servicing of central heating systems

CERTIFIED TO BRITISH STANDARDS BS6332 BS5258

THIS SYMBOL IS YOUR ASSURANCE OF QUALITY

These appliances are designed for use with Natural Gas only. They have been tested and conform with the provisions of BS. 6332 and BS. 5258.

Technical Training

The Ideal Boilers Technical Training Centre offers a series of first class training courses for domestic, commercial and industrial heating installers, engineers and system specifiers.
For details of courses please ring: 01482 498 432

CERTIFIED PRODUCT
Manufactured under a BS EN ISO 9001: 2000 Quality System accepted by BSI

Ideal Boilers, P.O. Box 103, National Ave, Kingston upon Hull, HU5 4JN. Telephone: 01482 492 251 Fax: 01482 448 858. Registration No. London 322 137.

Caradon Ideal Limited pursues a policy of continuing improvement in the design and performance of its products. The right is therefore reserved to vary specification without notice.

CE

Ideal BOILERS

Caradon
Ideal Limited

Ideal Installer/Technical Helpline: 01482 498663

www.idealboilers.com