installation and servicing

Mexico Slimline

Your Ideal installation and servicing guide

See reverse for **Mexico Slimline** users guide

RS445

When replacing any part on this appliance use only spare parts that you can be assured conform to the safety and performance specification that we require. Do not use reconditioned or copy parts that have not been clearly authorised by Ideal Boilers.

December 2003 UIN 200 945 A01

Ideal BOILERS

ENGINEERED FOR PEACE OF MIND

GENERAL

Table 1 - General Data

Boiler Size			**RS445**
Gas Supply Connection		in. BSP	Rc 1/2 (1/2)
Flow and Return Connections			Rc 1 (1" BSP)
MAXIMUM Static Water Head		m (ft.)	30.5 (100) (3 bar)
MINIMUM Static Water Head		m (ft.)	1.0 (3.3)
Electrical Supply (power consumption)			230 V ~ 50 Hz (10W)
External Fuse Rating			3 A
Water Content		litre (gal.)	20 (4.4)
Dry Weight *excluding* balanced flue terminal		kg. (lb.)	100 (220)
Max. Inst Weight		kg. (lb.)	89 (196)
Boiler Size	Height	mm (in.)	850 (33.5)
	Width	mm (in.)	255 (10.0)
	Depth	mm (in.)	535 (21.0)
Gas Type			Natural 2 H
Gas Supply Pressure			20 mb

Table 2 - Performance Data

Boiler Size		**RS445**
Boiler Input	kW (Btu/h)	16.3 (55,600)
Gas Consumption	l/s (ft.^{3}/h)	0.42 (53.6)
Boiler Output to Water	kW (Btu/h)	13.2 (45,000)
Burner Setting Pressure (hot)	mbar (in w.g.)	10.6 (4.2)
Flue gas flow rate (maximum)	g/s	7.6
Flue gas temperature	^{o}C	147
Seasonal efficiency (SEDBUK)*	Band D	[78.4]%

* The value is used in the UK government's Standard Assessment Procedure (SAP) for energy rating of dwellings. The test data from which it has been calculated have been certified by a notified body.

Note.

Gas consumption is calculated using a calorific value of 38.7 MJ/m^3 (1038 Btu/ft^3) gross or 34.9 MJ/m^3 (935 Btu/ft^3) nett

To obtain the gas consumption at a different calorific value:-

a. *For l/s - divide the gross heat input (kW) by the gross C.V. of the gas (MJ/m^3)*

b. *For ft^3/h - divide the gross heat input (Btu/h) by the gross C.V. of the gas (Btu/ft^3)*

Key to symbols

GB = United Kingdom

IE = Ireland (Countries of destination)

PMS = Maximum operating pressure of water

C_{11} = A room sealed appliance designed for connection via ducts to a horizontal terminal, which admits fresh air to the burner and discharges the products of combustion to the outside without a fan in the combustion products circuit.

I_{2H} = An appliance designed for use on 2nd Family gas, Group H only.

CAUTION. To avoid the possibility of injury during the installation, servicing or cleaning of this appliance, care should be taken when handling edges of sheet steel components.

CONTENTS

Air Supply 6
Boiler Assembly - Exploded view 11
Boiler Clearances 5
Burner Assembly - Exploded view 34
Electrical Connections 16
Electrical Diagram 17
Electrical Supply 7
Fault Finding 31
Flue Fitting 15
Flue Installation 6
Gas Safety Regulations 4
Gas Supply 5
Initial Lighting 21
Installation 11
Mandatory Requirements 4
Servicing 23
Short List of Parts 32
System Electrical Diagrams 18
Terminal Guards 6
Water Circulation 7
Water Connections 16
Water Treatment 7

Mexico Slimline

Natural Gas only

B.G. Certified - P.I. No. 87AT14
Destination Countries: GB & IE

Appliance type: C_{11}

Models	G.C. Appliance No.
Mexico Slimline RS 445	41 392 88

INTRODUCTION

The Mexico Slimline RS 445 is a floor standing, balanced flue gas boiler. It is rated to provide a central heating output of 13.2 kW (45,000 Btu/h)

The boiler has a cast iron heat exchanger and is supplied fully assembled, complete with a white enamelled mild steel casing.

The boiler thermostat control is located behind the upper front panel (drop-down door).

The boiler is suitable, as standard, for connection to open-vented systems ONLY.

The systems may be:

- pumped or gravity circulating indirect DHW only
- pumped central heating only
- pumped central heating combined with either a pumped or gravity circulating indirect DHW circuit.

This boiler may require 2 or more operatives to move it to its installation site, remove it from its packaging base and during movement into its installation location. Manoeuvring the boiler may include the use of a sack truck and involve lifting, pushing and pulling. The use of 1" pipe stubs of suitable lengths may be temporarily screwed into the boiler tappings to act as handles.

Caution should be exercised during these operations.

For GB, to comply with Building Regulations Part L1 (Part J in Scotland) the boiler should be fitted in accordance with the manufacturer's instructions. Self-certification that the boiler has been installed to comply with Building Regulations can be demonstrated by completing and signing the Benchmark log book.

BENCHMARK LOG BOOK DETAILS

Boiler	**Page**
Make and model	3
Appliance serial no. on data badge	11
SEDBUK No. %	2
Controls	
Time and temperature control to heating	18/19
Time and temperature control to hot water	18/19
Heating zone valves	18/19
TRV's	7
Auto bypass	7
Boiler interlock	7
For all boilers	
Flushing to BS.7593	7
Inhibitor	7
Central heating mode	
Heat input	to be calculated

	Page
Burner operating pressure	measure and record
Central heating flow temp.	measure and record
Central heating return temp.	measure and record
For combination boilers only	
Scale reducer	n/a
Hot water mode	
Heat input	n/a
Max. operating burner pressure	n/a
Max. operating water pressure	n/a
Cold water inlet temp	n/a
Hot water outlet temp.	n/a
Water flow rate at max. setting	n/a
For condensing boilers only	
Condensate drain	n/a
For all boilers:	*complete, sign & hand over to customer*

For assistance see Technical Helpline on the back page

NOTE TO THE INSTALLER: LEAVE THESE INSTRUCTIONS ADJACENT TO THE GAS METER. ALSO COMPLETE THE BENCHMARK LOG BOOK AND GIVE THIS TO THE CUSTOMER.

benchmark™

Operatives should be knowledgeable in handling techniques when performing these tasks and the following precautions should be considered:

- Split the boiler down to reduce the weight, e.g. remove casing and hardware pack. Refer to Frame 9.
- Be physically capable.
- Use PPE as appropriate, e.g. gloves, safety footwear.

During all manoeuvres and handling actions, every attempt should be made to ensure the following unless unavoidable and/or the weight is light.

- Keep back straight.
- Avoid twisting at the waist.
- Avoid upper body/top heavy bending.
- Always grip with the palm of the hand.
- Use designated hand holds.
- Keep load as close to the body as possible.
- Always use assistance if required.

OPTIONAL EXTRA KITS

Programmer Kit	Fits neatly within the casing. Separate fitting instructions are included with this kit.
Overheat Thermostat Kit	Is available to allow the boiler to be used on sealed water systems.

CURRENT GAS SAFETY (INSTALLATION AND USE) REGULATIONS OR RULES IN FORCE.

The appliance is suitable only for installation in GB and IE and should be installed in accordance with the rules in force.

In GB, the installation must be carried out by a CORGI Registered Installer. It must be carried out in accordance with the relevant requirements of the:

- Gas Safety (Installation and Use) Regulations
- The appropriate Building Regulations either The Building Regulations, The Building Regulations (Scotland), Building Regulations (northern Ireland).
- The Water Fittings Regulations or Water byelaws in Scotland.
- The Current I.E.E. Wiring Regulations.

Where no specific instructions are given, reference should be made to the relevant British Standard Code of Practice.

In IE, the installation must be carried out by a Competent Person and installed in accordance with the current edition of I.S.813 "Domestic Gas Installations", the current Building Regulations and reference should be made to the current ETCI rules for electrical installation.

Detailed recommendations are contained in the following British Standard Codes of Practice:

BS. 6891	Low pressure installation pipes.
BS. 6798	Installation of gas fired hot water boilers of rated input not exceeding 60 kW.
BS. 5449:1	Forced circulation hot water systems (small bore and microbore domestic central heating systems).
BS. 5546	Installation of gas hot water supplies for domestic purposes (2nd Family Gases).
BS. 5440: 1	Flues for gas appliances of rated input not exceeding 60 kW.
BS. 5440: 2	Ventilation for gas appliances of rated input not exceeding 60 kW.
BS 7593	Treatment of water in Domestic Hot Water Central Heating Systems.

Health and Safety Document No. 635.

The Electricity at Work Regulations, 1989.

Manufacturer's notes must NOT be taken in any way as overriding statutory obligations.

IMPORTANT. These appliances are certificated by the British Standards Institution for safety and performance. It is important, therefore, that no external control devices, e.g. flue dampers, economisers etc., are directly connected to these appliances unless covered by these Installation and Servicing Instructions or otherwise recommended by **Caradon Ideal Limited** in writing. If in doubt please enquire.

Any direct connection of a control device not approved by **Caradon Ideal Limited** could invalidate the BSI Certification and the normal appliance warranty. It could also infringe the Gas Safety Regulations and the above regulations or other statutory requirements.

SAFE HANDLING OF SUBSTANCES

Care should be taken when handling the boiler insulation panels, which can cause irritation to the skin. No asbestos, mercury or CFCs are included in any part of the boiler.

1 BOILER WATER CONNECTIONS

1. This appliance is NOT suitable for use in a direct hot water system.
2. If the boiler is to be used on a sealed system an **Overheat Thermostat Kit** is available and must be installed in accordance with the instructions supplied with the kit.
3. All water connections are Rc1 (1"BSP). The front top and bottom plugged connections must not be used. 2 spare blanking off plugs are provided, in the hardware pack, for use as necessary in the rear flow or return water connections.
4. Pipework connections to all systems may use flow and return connections on the same side, or opposite sides of the boiler.

   That is:

Fully pumped system
In a fully system, either a LH or a RH flow connection, together with LH or RH return connection, may be used.

Gravity domestic hot water and pumped central heating.
In a gravity DHW and pumped CH system separate flow and return connections are used for each service.

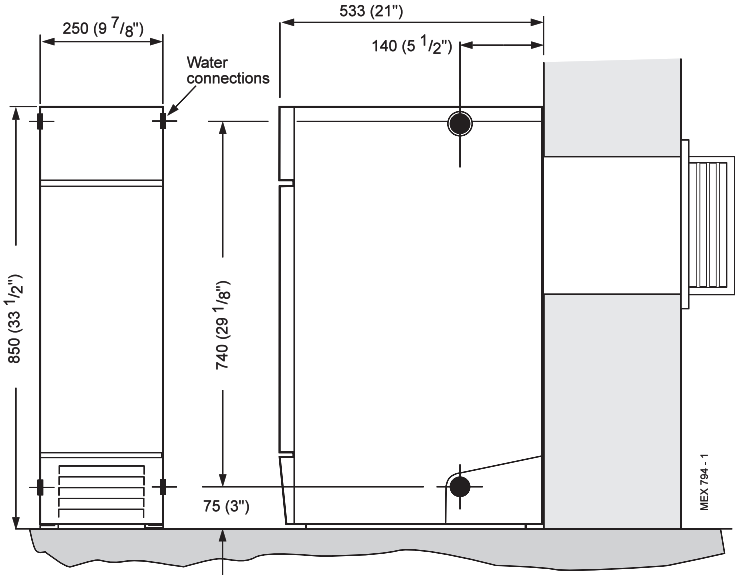

The use of a cylinder thermostat is recommended. This will prevent excessive domestic hot water temperatures.

LOCATION OF BOILER

The boiler must be installed on a flat and level floor, capable of adequately supporting the weight of the boiler and any ancillary equipment.

The boiler may be fitted on a combustible floor.

Insulation is not necessary, unless required by the local authority.

The boiler MUST be installed against an external wall (the back of the boiler casing may be fitted up to the wall).

The boiler must not be fitted outside.

Timber Framed Buildings

If the boiler is to be fitted in a timber framed building it should be fitted in accordance with the Institute of Gas Engineering document IGE/UP/7:1998.

Bathrooms

The boiler may be installed in any room or internal space, although particular attention is drawn to the requirements of the current I.E.E. (BS 7671) Wiring Regulations and, in Scotland, the electrical provisions of the building regulations applicable in Scotland with respect to the installation of the boiler in a room or internal space containing a bath or shower. For Ireland reference should be made to the current ETCI rules for electrical installations and I.S. 813: 2002.

Where a room-sealed appliance is installed in a room containing a bath or shower then the appliance and any electrical switch or appliance control utilising mains electricity should be so situated that it cannot be touched by a person using the bath or shower.

Where installation will be in an unusual location, special procedures may be necessary and BS.6798 gives detailed guidance on this aspect.

Compartment Installations

A compartment used to enclose the boiler MUST be designed and constructed specially for this purpose.

An existing cupboard or compartment may be used, providing it is modified for the purpose.

Details of essential features of cupboards/compartment design, including airing cupboard installation, are to conform to the following:

- BS. 6798.
- The position selected for installation MUST allow adequate space for servicing in front of the boiler and for air circulation around the boiler.

  Side clearance is only necessary for installation. The amount of side clearance will depend upon the type of connection used. Where side units are modified to facilitate installation then no clearance is required.
- This position MUST also permit the provision of a satisfactory flue termination.
- For the minimum clearances required for safety and subsequent service see Frame 2.

GAS SUPPLY

The local gas supplier should be consulted, at the installation planning stage, in order to establish the availability of an adequate supply of gas. An existing service pipe must NOT be used without prior consultation with the local gas supplier.

The boiler is to be installed only on a gas supply with a governed meter.

A gas meter can only be connected by the local gas supplier or by a local regional contractor.

Check that the appliance is suitable for the proposed gas supply. An existing meter should be checked, preferably by the gas supplier, to ensure that the meter is adequate to deal with the rate of gas supply required. A **minimum** gas pressure of 20 mbar Must be available at the boiler inlet, with the boiler operating.

2 FLOOR MOUNTING AND BOILER CLEARANCES

Flammable materials must not be placed in close proximity to the appliance. Materials giving off flammable vapours must not be stored in the same room as the appliance.

FLOOR MOUNTING

1. The floor must be flat, level and of suitable load bearing capacity.
2. The back of the boiler may be fitted up to the wall.

BOILER CLEARANCES

The minimum overall dimensions of the space in which the boiler is to operate and to facilitate servicing are as follows:

Boiler Size	Width	Depth	Height
RS445	260 mm (10 1/4")	533 mm (21")	870 mm (34 1/4")

IMPORTANT.

In addition a MINIMUM clearance of 533 mm (21") MUST be available at the front of the boiler, for servicing.

Terminal sizes

Boiler Size	Depth (Face to wall)	Width	Height
RS445	107 mm (4 1/4")	198 mm (7 3/4")	281 mm (11")

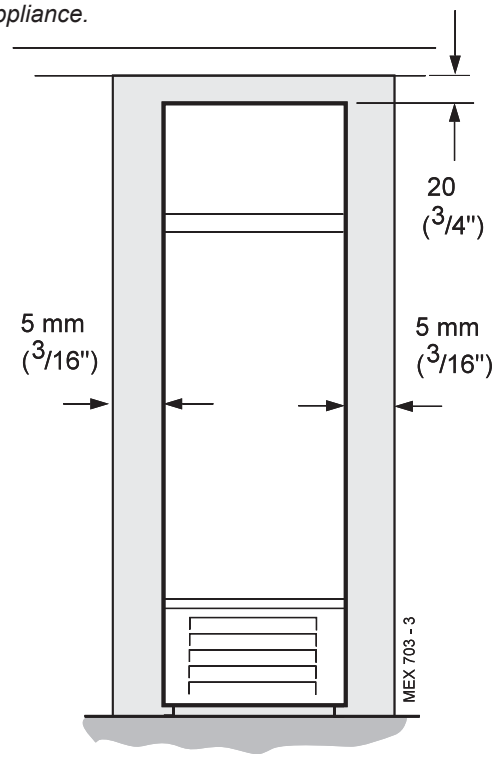

Installation pipes MUST be fitted in accordance with BS. 6891. In IE refer to I.S. 813:2002. Pipework from the meter to the boiler MUST be of an adequate size. Do not use pipes of a smaller size than the boiler gas connection.

The complete installation MUST be tested for gas soundness and purged as described in the above code.

FLUE INSTALLATION

Some pluming may occur at the termination, so terminal positions where this could cause a nuisance should be avoided.

The flue must be installed in accordance with the recommendations of BS. 5440-1:2000. In IE refer to I.S.813:2002.

The following notes are intended for general guidance:-

1. The boiler MUST be installed so that the terminal is exposed to external air.
2. It is important that the position of the terminal allows the free passage of air across it at all times.
3. Minimum acceptable spacing from the terminal to obstructions and ventilation openings are specified in Table 3.
4. Where the lowest part of the terminal is fitted less than 2m (6' 6") above a balcony, above ground or above a flat roof to which people have access then the terminal MUST be protected by a purpose designed guard.

   Terminal guards are available from boiler suppliers - ask for Grasslin Flue Guard, Model K1. In case of difficulty seek advice from:

   Grasslin (UK) Ltd., Tower House, Vale Rise, Tonbridge, Kent TN9 1TB.
   Tel: +44 (0) 1732 359 888. Fax: +44 (0) 1732 354 445
   www.tfc-group.co.uk

   Ensure that the guard is fitted centrally

5. Where the terminal is fitted within 1000mm (39 1/2") of a plastic or painted gutter or 500mm (19 1/2") of painted eaves then an aluminium shield at least 1000mm (39 1/2") long should be fitted to the underside of the gutter or painted surface.
6. The air inlet/products outlet duct and the terminal of the boiler MUST NOT be closer than 30mm (2") to combustible material. Detailed recommendations on the protection of combustible material are given in BS.5440-1:2000. In IE refer to I.S. 813:2002.

IMPORTANT. It is absolutely ESSENTIAL to ensure, in practice, that products of combustion discharging from the terminal cannot re-enter the building or any other adjacent building through ventilators, windows, doors, other sources of natural air infiltration or forced ventilation/air conditioning. If this should occur, the appliance MUST be turned OFF, labelled 'unsafe' and corrective action taken.

Table 3 - Balanced flue terminal position

Terminal Position	Minimum Spacing
1a. Directly BELOW an opening, air brick, opening window etc.	1500 mm (60")
1b. Directly ABOVE an opening, air brick, opening window etc.	300 mm (12")
1c. HORIZONTALLY to an opening, air brick, opening window etc.	600 mm (24")
2. Below guttering, drain pipes or soil pipes	300 mm (12")
3. Below eaves	300 mm (12")
4. Below balconies or a car port roof	600 mm (24")
5. From vertical drain pipes or soil pipes	300mm (12")
6. From an internal or external corner or to a boundary alongside the terminal	600 mm (24")
7. Above adjacent ground, roof or balcony level	300 mm (12")
8. From a surface or a boundary facing the terminal	600 mm (24")
9. From a terminal facing a terminal	600 mm (24")
10. From an opening in a car port (e.g. door or window) into dwelling	1200 mm (48")
11. Vertically from a terminal on the same wall	1500 mm (60")
12. Horizontally from a terminal on the wall	300 mm (12")

TERMINAL

The terminal assembly can be adapted to accommodate various wall thicknesses. Refer to Frame 11.

PLUMING

Pluming may occur at the terminal so terminal positions which would cause a nuisance should be avoided.

AIR SUPPLY

Detailed recommendations for air supply are given in BS.5440:2. In IE refer to I.S. 813:2002.

The following notes are for general guidance:

1. It is NOT necessary to have a purpose provided air vent in the room or internal space in which the boiler is installed.
2. If the boiler is to be installed in a cupboard or compartment, permanent air vents are required (for cooling purposes) in the cupboard/compartment, at both high and low levels. The air vents must either communicate with room/internal space, or be direct to outside air. The minimum effective areas of the permanent air vents, required in the cupboard/ compartment, are specified in Table 4 and are related to maximum rated heat input.
3. Both air vents MUST communicate with the same room or internal space or MUST be on the same wall to outside air.
4. In siting the air vents care must be taken to avoid the freezing of pipework.

Table 4 - High and low vent areas

RS445	Air from room		Air from outside	
	High level	Low level	High level	Low level
cm²	190	190	95	95
in²	30	30	15	15

WATER CIRCULATION SYSTEM

The boiler must NOT be used for direct hot water supply.

The following indirect open vented systems are suitable:

- Combined gravity domestic hot water (DHW) and pumped central heating (CH)
- Combined pumped gravity domestic hot water and pumped central heating.
- Pumped central heating only.
- Gravity domestic hot water only, up to a minimum domestic hot water cylinder storage capacity of 180 litres (40 gal.)

Table 5 - Water Flow Rate and Pressure Loss

Boiler size		RS 445
Boiler output	kW	13.2
	Btu/h	45 000
Water Flow	l/sec	0.29
	gpm	3.8
Pressure Loss	kPa	0.34
	m	0.034
	ft	0.13

The resistance with an 11 °C temperature difference will be approximately 2 in.w.g. (5 mbar).

The central heating system should be in accordance with BS. 6798 and, in addition, with BS. 5449:1 for smallbore and microbore systems.

The domestic hot water system, if applicable, should be in accordance with the relevant recommendations of BS. 5546.

Copper tubing to BS. 2871:1 is recommended for water carrying pipework.

The hot water storage cylinder MUST be of the indirect type and should preferably be manufactured of copper.

The hot water cylinder and ancillary pipework not forming part of the useful heating surface should be lagged to prevent heat loss and any possible freezing, particularly where pipes run through roof spaces and ventilated underfloor spaces.

The flow and return connections to a fully pumped system may be made either at one side of the boiler or diagonally, to suit convenience. In a combined pumped heating and gravity domestic hot water system the gravity flow and return connections must be made to the same side of the boiler and the pumped connections to the opposite side.

IMPORTANT

A minimum length of 2 metres of copper pipe MUST be fitted to both flow and return connections from the boiler before connection to any plastic piping.

The boiler must be vented. If venting cannot be done via a flow connection a separate vent MUST be fitted by the installer.

Draining taps MUST be located in accessible positions, which permit the draining of the whole system - including the boiler and hot water storage vessel. They should be at least 1/2" BSP nominal size and be in accordance with BS. 2879.

WATER TREATMENT

These boilers incorporate a cast iron heat exchanger.

IMPORTANT. The application of any other treatment to this product may render the guarantee of **Caradon Ideal Limited** INVALID.

Caradon Ideal Limited recommend Water Treatment in accordance with the *Benchmark* Guidance Notes on Water Treatment in Central Heating Systems.

Caradon Ideal Limited recommend the use of Fernox, GE Betz Sentinel or Salamander water treatment products, which must be used on accordance with the manufacturers instructions.

For further information contact:

Fernox Manufacturing Co. Ltd, Cookson Electronics,
Forsyth Road, Sheerwater, Woking, Surrey.
GU21 5RZ. Tel. +44 (0) 1799 521133

or

G E Betz Ltd, Sentinel Division, Foundry Lane, Widnes,
Cheshire, WA8 8UD.
Tel. +44 (0) 151 424 5351

or

Salamander Engineering Ltd, Unit 24, Reddicap Trading Estate,
Sutton Coldfield, West Midlands B75 7BU.
Tel. +44 (0) 121 378 0952

Notes.

1. *It is most important that the correct concentration of the water treatment products is maintained in accordance with the manufacturers' instructions.*
2. *If the boiler is installed in an existing system any unsuitable additives MUST be removed by thorough cleansing. BS7593:1992 details the steps necessary to clean a domestic heating system.*
3. *In hard water areas, treatment to prevent limescale may be necessary - however the use of artificially softened water is NOT permitted.*
4. *Under no circumstances should the boiler be fired before the system has been thoroughly flushed.*

BOILER CONTROL INTERLOCKS

Caradon Ideal Limited recommend that heating systems utilising full thermostatic radiator valve control of temperature in individual rooms should also be fitted with a room thermostat controlling the temperature in a space served by radiators not fitted with such a valve as stated in BS. 5449.

Central heating systems controls should be installed to ensure the boiler is switched off when there is no demand for heating or hot water.

When thermostatic radiator valves are used, the space heating temperature control over a living / dining area or hallway having a heating requirement of at least 10% of the boiler heat output should be achieved using a room thermostat, whilst other rooms are individually controlled by thermostatic radiator valves. However, if the system employs thermostatic radiator valves on all radiators, or two port valves without end switches, then a bypass circuit must be fitted with an automatic bypass valve to ensure a flow of water should all valves be in the closed position.

ELECTRICAL SUPPLY

WARNING. The appliance MUST be efficiently earthed.

Wiring external to the appliance MUST be in accordance with the current I.E.E. (BS 7671) Wiring Regulations and any local regulations which apply. For Ireland reference should be made to the current ETCI rules for electrical installations.

The boiler is supplied for 230 V ~ 50 Hz single phase.

The fuse rating is 3A.

Connection must be made in a way that allows complete isolation of the electrical supply - such as a double pole switch, having a 3mm (1/8") contact separation in both poles, or a plug and socket serving only the boiler and system controls.
The means of isolation must be accessible to the user after installation.

For bathroom installations the point of connection to the mains must be situated outside the bathroom.

3 MINIMUM REQUIREMENTS Fully pumped systems

1. Open vent and cold feed connections must be made to the boiler flow and return tappings according to the options shown in Frame 1.
2. The boiler is assumed to be the highest point of the circulating system.
3. The circulating pump is positioned on the FLOW and the vertical distance, between the pump and feed/ expansion tank, must comply with the pump manufacturer's minimum requirements, to avoid cavitation. Should these conditions not apply, either lower the pump position or raise the feed/expansion tank above the minimum requirements of **Caradon Ideal Limited.**
4. The water velocity through the boiler flow/return pipes is assumed to be below 1 m/s (3 ft./s), whilst the pump flow rate is set to provide a temperature difference of 11 °C (20°F) across the boiler flow/return, at design input.
5. This information is intended as a GUIDE ONLY and cannot take into account instantaneous changes in heat caused by the operation of motorised valves, pumps etc.

   Due allowance MUST be made if surging is liable to occur. If in any doubt, contact **Caradon Ideal Limited.**

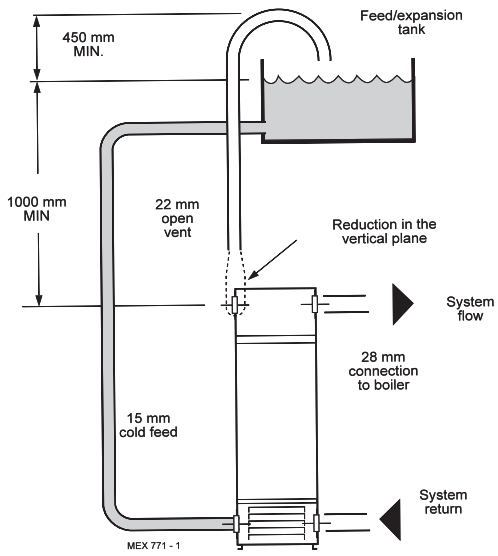

4 GRAVITY HOT WATER & PUMPED CENTRAL HEATING

1. Separate flow and return connections are used for each service. All possible configurations are given in Frame 1 but *ONLY those shown should be used.*
2. The use of a cylinder thermostat is recommended. This will prevent excessive DHW temperatures and thus reduce gas consumption.
3. The schematic pipework graph is based on the assumption that NO MORE than 8 elbows are used in the gravity loop, including entry to the boiler.
4. For each extra elbow in excess of 8, (R) MUST be reduced by 300 mm (12") or (H) increased by 100 mm (4")
5. Whatever value is selected for (R) the value of (H) MUST be at least that indicated by the graph.

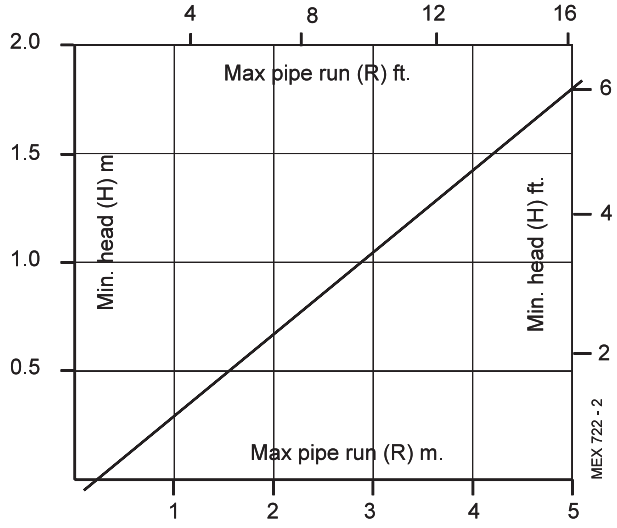

R = the horizontal distance between the centre line of the cylinder and the boiler tappings used (measured along the pipe run).

H = the vertical distance between the top of the boiler and the base of the cylinder.

Notes.

a. *Flow and return pipes should rise vertically on leaving the boiler.*

b. *Horizontal pipes should be ABOVE ceiling level and as short as possible.*

c. *A MINIMUM inclination of 25 mm per 3 m run (1" per 10') is required to avoid air locks.*

If the above conditions cannot be met pumped primaries should be used.

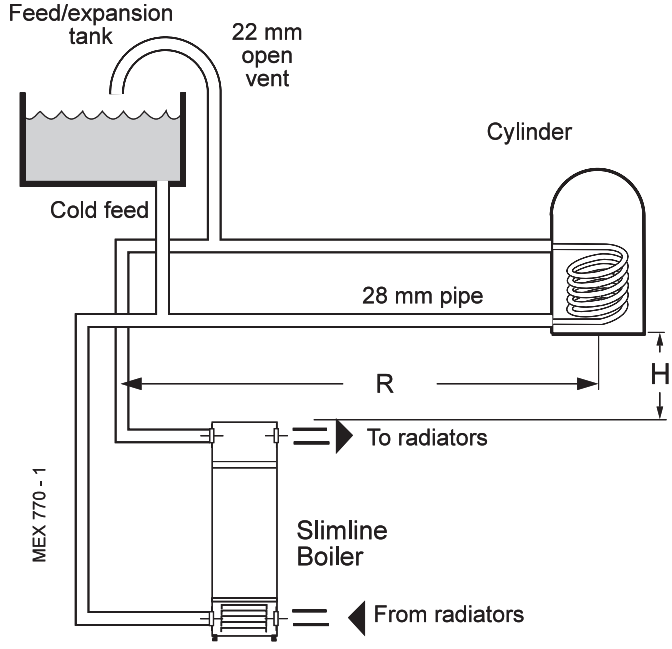

5 SEALED SYSTEM REQUIREMENTS Fully pumped systems

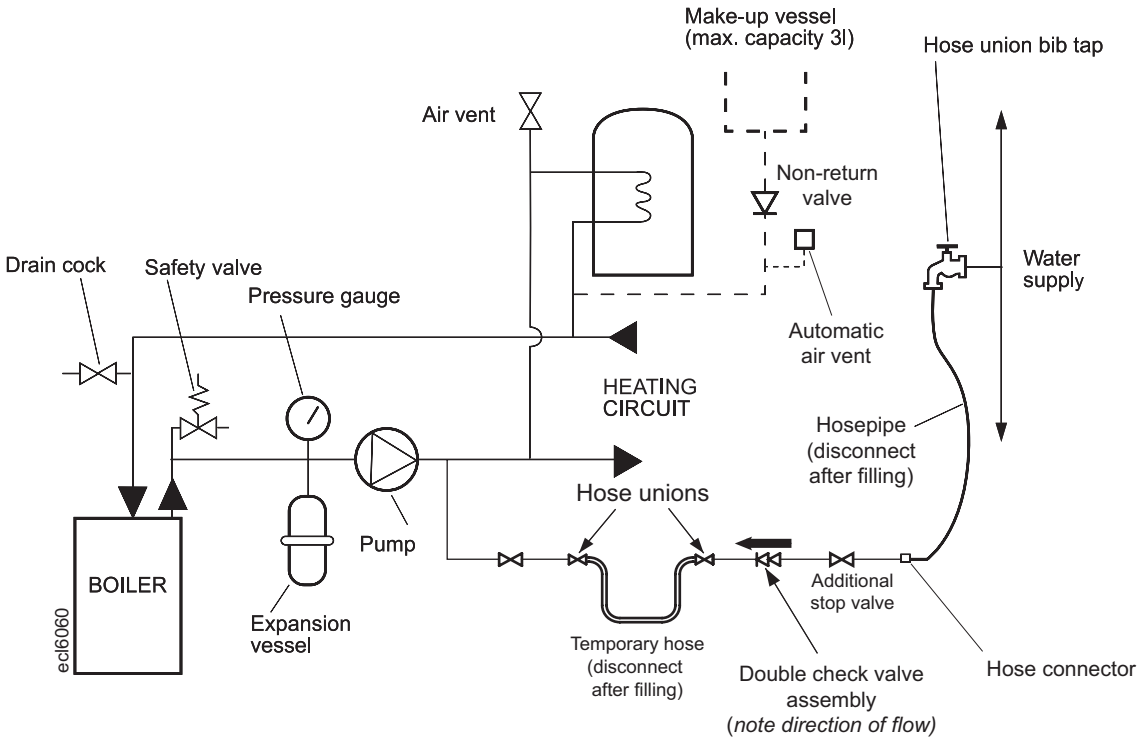

Note.

The method of filling, refilling, topping up or flushing sealed primary hot water circuits from the mains via a temporary hose connection is only allowed if acceptable to the local water authority.

1. **General**
   - **a.** The installation must comply with the requirements of BS.6798 and BS.5449.
   - **b.** The installation should be designed to work with flow temperatures of up to 82°C.
   - **c.** All components of the system, including the heat exchanger of the indirect cylinder, must be suitable for a working pressure of 3 bar (45 lb/in²) and temperature of 110°C. Care should be taken in making all connections so that the risk of leakage is minimised.
2. **Safety Valve**

   A spring loaded safety valve complying with the relevant requirements of BS.6759 must be fitted in the flow pipe, as close to the boiler as possible and with no intervening valve or restriction. The valve should have the following features:
   - **a.** A non-adjustable preset lift pressure not exceeding 3 bar (45 lb./in²)
   - **b.** A manual testing device.
   - **c.** Provision for connection of a discharge pipe. *The valve or discharge pipe should be positioned so that the discharge of water or steam cannot create a hazard to the occupants of the premises or cause damage to electrical components and wiring.*
3. **Pressure Gauge**

   A pressure gauge covering at least the range 0-4 bar (0-60 lb./in²) must be fitted to the system. The gauge should be easily seen from the filling point and should preferably be connected at the same point as the expansion vessel.
4. **Expansion Vessel**
   - **a.** A diaphragm type expansion vessel must be connected at a point close to the inlet side of the pump, the connecting pipe being not less than 15mm (1/2" nominal) size and not incorporating valves of any sort.
   - **b.** The vessel capacity must be adequate to accept the expansion of the system water when heated to 110°C (230°F)
   - **c.** The charge pressure must not be less than the static water head above the vessel The pressure attained in the system when heated to 110°C (230°F) should be at least 0.35 bar (5lb/in²) less than the lift pressure of the safety valve.

   For guidance on vessel sizing refer to Table 6 in Frame 6. For further details refer to BS.5449. For IE refer to the current edition of I.S. 813.
5. **Cylinder**

   The cylinder must be either of the indirect coil type or a direct cylinder fitted with an immersion calorifier which is suitable for operating on a gauge pressure of 0.35 bar (5lb./in²) in excess of the safety valve setting. *Single feed indirect cylinders are not suitable for sealed systems.*
6. **Make-up Water**

   Provision must be made for replacing water loss from the system, either:
   - **a.** From a manually fitted make-up vessel with a readily visible water level. The vessel should be mounted at least 150mm (6") above the highest point of the system and be connected through a non-return valve to the system, fitted at least 300mm (12") below the make-up vessel on the return side of the domestic hot water cylinder or radiators.
   - **b.** Where access to a make-up vessel would be difficult by pre-pressurisation of the system. Refer to 'Filling.'

6 SEALED SYSTEM REQUIREMENTS - continued

7. Mains Connection

There must be no direct connection to the mains water supply or to the water storage tank supplying domestic water, even through a non-return valve, without the approval of the local water authority.

8. Filling

The system may be filled by one of the following methods:

a. Through a cistern, used for no other purposes, via a ball valve permanently connected directly to a service pipe and / or a cold water distributing pipe.

The static head available from the cistern should be adequate to provide the desired initial system design pressure. The cold feed pipe from the cistern should include a non-return valve and a stop valve with an automatic air vent connected between them, the stop valve being located between the system and the automatic air vent. The stop valve may remain open during normal operation of the system if automatic water make-up is required.

b. Through a self-contained unit comprising a cistern, pressure booster pump (if required) and, if necessary, an automatic pressure reducing valve and flow restrictor. The cistern should be supplied through a temporary connection from a service pipe or cold water distributing pipe.

This unit may remain permanently connected to the heating system to provide limited automatic water make-up. Where the temporary connection is supplied from a service pipe or distributing pipe which also supplies other draw-off points at a lower level then a double check valve shall be installed upstream of the draw-off point.

c. Through a temporary hose connection from a draw-off tap supplied from a service pipe under mains pressure. Where the mains pressure is excessive a pressure-reducing valve shall be used to facilitate filling.

The following fittings shall form a permanent part of the system and shall be fitted in the order stated:

A stop valve complying with the requirements of BS. 1010, Part 2 (the hose from the draw-off tap shall be connected to this fitting).

A test cock.

A double check valve of an approved type.

- Thoroughly flush out the whole of the system with cold water, without the pump in position.
- With the pump fitted, fill and vent the system until the pressure gauge registers 1.5 bar (21.5lb/in^2).

  Examine for leaks.
- Check the operation of the safety valve by manually raising the water pressure until the valve lifts. This should occur within ± 0.3 bar (± 4.3lb/in^2) of the preset lift pressure.
- Release water from the system until the initial system design pressure is reached.
- Light the boiler and heat the system to the maximum working temperature. Examine for leaks.
- Turn off the boiler and drain the system while still hot.
- Refill and vent the system.

Sizing procedure for expansion vessels: The volume of the expansion vessel (litres) fitted to a sealed system shall not be less than that given by Table 6, multiplied by a factor of 0.8 (for flow temperatures of less than 88 °C).

Table 6

Safety valve setting	3.0 bar			2.5 bar			2.0 bar	
Vessel charge and initial system pressure	0.5 bar	1.0 bar	1.5 bar	0.5 bar	1.0 bar	1.5 bar	0.5 bar	1.0 bar
Total water content of system (litres)	Expansion vessel volume (litres)							
25	2.1	2.7	3.9	2.3	3.3	5.9	2.8	5.0
50	4.2	5.4	7.8	4.7	6.7	11.8	5.6	10.0
75	6.3	8.2	11.7	7.0	10.0	17.7	8.4	15.0
100	8.3	10.9	15.6	9.4	13.4	23.7	11.3	20.0
125	10.4	13.6	19.5	11.7	16.7	29.6	14.1	25.0
150	12.5	16.3	23.4	14.1	20.1	35.5	16.9	30.0
175	14.6	19.1	27.3	16.4	23.4	41.4	19.7	35.0
200	16.7	21.8	31.2	18.8	26.8	47.4	22.6	40.0
225	18.7	24.5	35.1	21.1	30.1	53.3	25.4	45.0
250	20.8	27.2	39.0	23.5	33.5	59.2	28.2	50.0
275	22.9	30.0	42.9	25.8	36.8	65.1	31.0	55.0
300	25.0	32.7	46.8	28.2	40.2	71.1	33.9	60.0
Multiplying factors for other system volumes	0.0833	0.109	0.156	0.094	0.134	0.237	0.113	0.20

7 BOILER ASSEMBLY - Exploded View

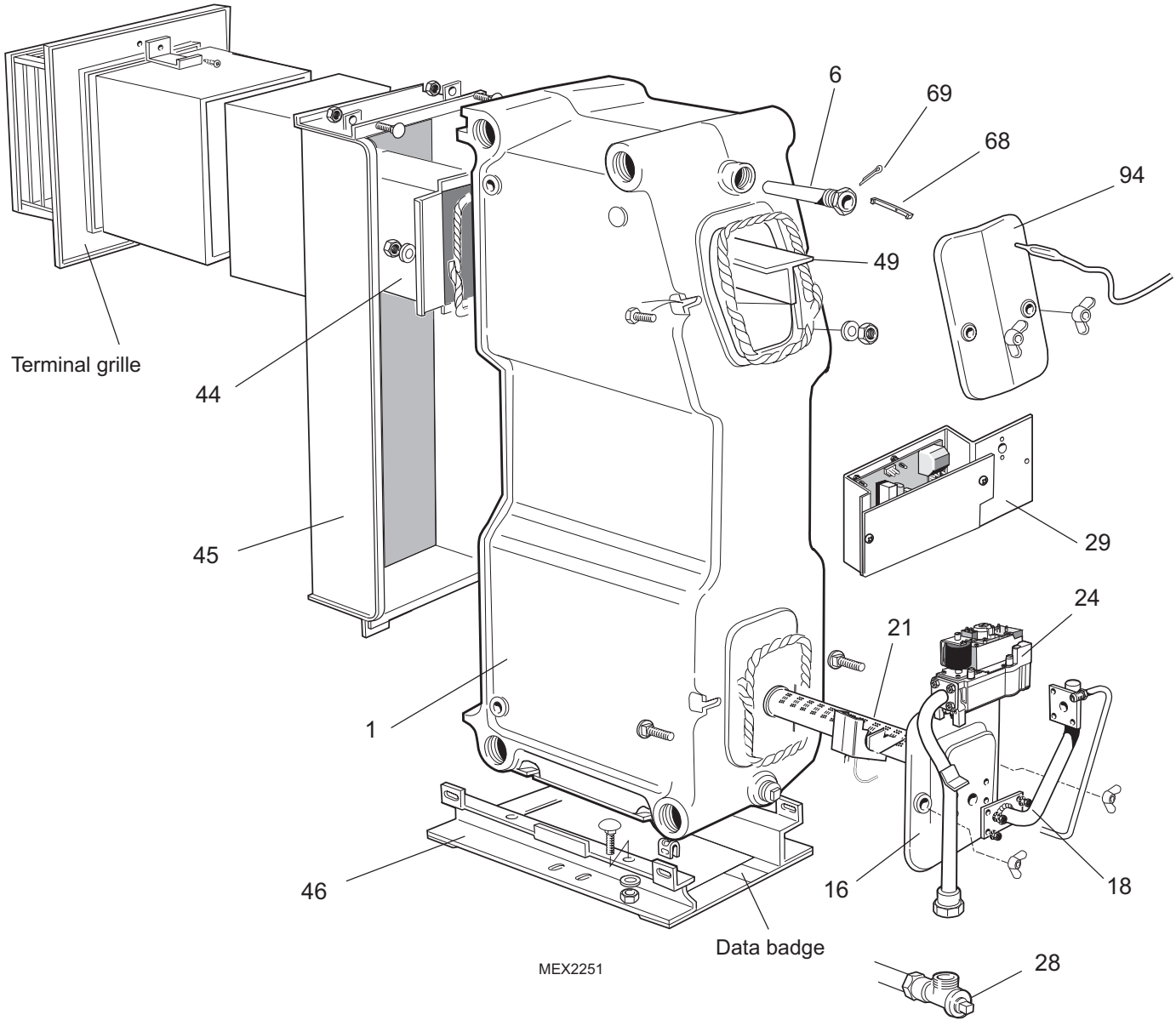

LEGEND

1. Heat exchanger.	**24.** Gas valve.	**46.** Boiler feet assy.
6. Thermostat pocket.	**28.** Gas service cock.	**49.** Flue baffle
16. Front plate.	**29.** PCB assy.	**68.** Retaining clip
18. Burner manifold	**44.** Flue duct.	**69.** Split pin
21. Main burner.	**45.** Air duct.	**94.** Cleanout cover

8 UNPACKING

To avoid damage to the boiler casing it is recommended that the casing is removed BEFORE THE BOILER BODY IS TAKEN OFF THE PALLET.

The boiler is supplied fully assembled in **Pack A,** together with either packs **B, B1** or **C.**

Packs B, B1 or **C** contain the flue terminal appropriate to the wall thickness.

Unpack and check the contents.

PACK 'A' CONTENTS

- complete boiler assembly
- the Hardware Pack (listed separately below)
- these Installation and Servicing/Users Instructions

complete boiler assembly

FLUE PACKS:

PACKS B, B1 AND C CONTENTS

- Flue terminal assembly

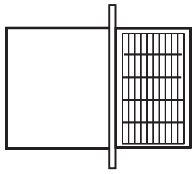

- Sachet of sealing mastic - 2 off

HARDWARE PACK

- 1" BSP plugs - 2 off

- Split pin - 1 off

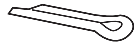

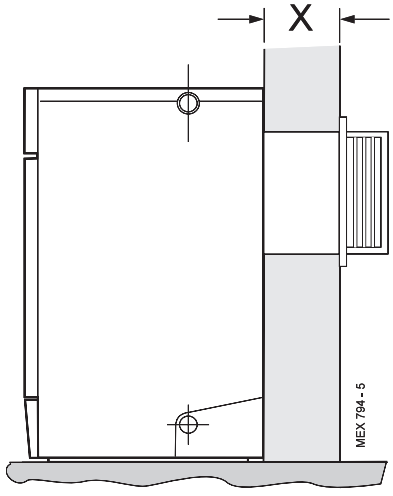

Table 7: shows the number of flue packs required for the given wall thicknesses

Wall thickness Dimension (duct length) X, shown above				Flue pack(s) required
Boiler fitted flush with wall		**Boiler fitted in line with 600 mm kitchen units**		
114 to 191 mm	(4 1/2" to 7 1/2")	up to 125 mm	(up to 5")	**C**
229 to 305 mm	(9" to 12")	163 to 242 mm	(6 1/2" to 9 1/2")	**B**
318 to 394 mm	(12 1/2" to 15 1/2")	253 to 332 mm	(10" to 13")	**B1**

9 BOILER CASING REMOVAL

It is preferable to removed the casing to install the boiler

1. Undo the 2 screws and lift off the lower front panel.
2. Remove 2 screws and lift off the grille assembly.
3. Disconnect the in-line connector on the PCB lead.
4. Remove the Burner On neon cable from the back of the control panel.
5. Remove the 2 screws securing the control panel and disengage the panel by lowering and pulling it forward.
6. Remove the 2 screws securing the top panel to the side.

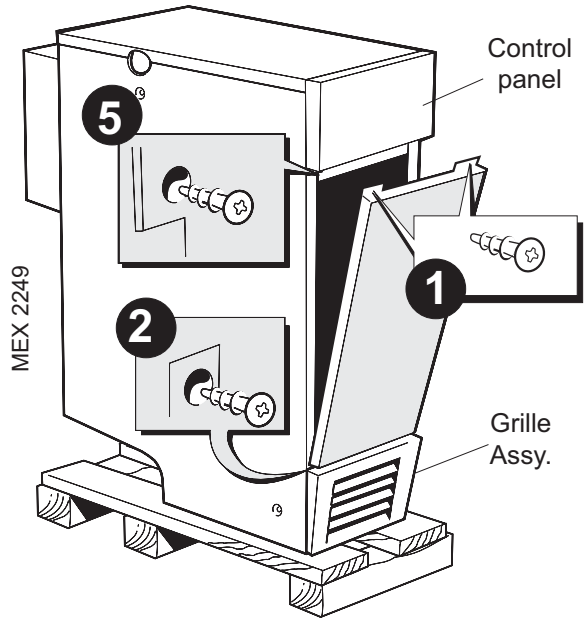

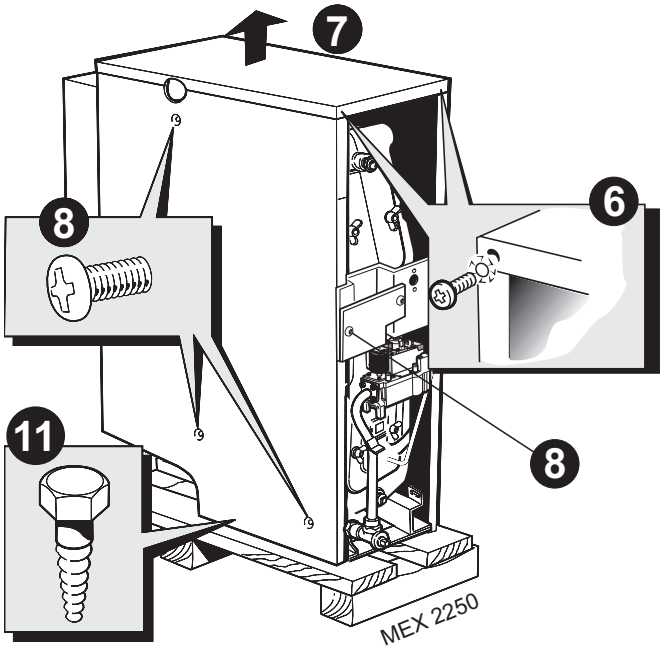

7. Lift the top panel off the boiler.
8. Undo the 2 screws securing the PCB box to the side panels and carefully rest it on the top of the gas valve.
9. Remove the 3 screws securing each side panel to the boiler.
10. Remove each side panel.
11. The boiler is held to the packaging base by 2 M6 hex head screws. Remove the screws and remove the boiler from the packaging base.

10 CHECKING THE FLUEWAY BAFFLES

1. Remove the flue cleanout cover.
2. Check that the baffle is seated correctly.

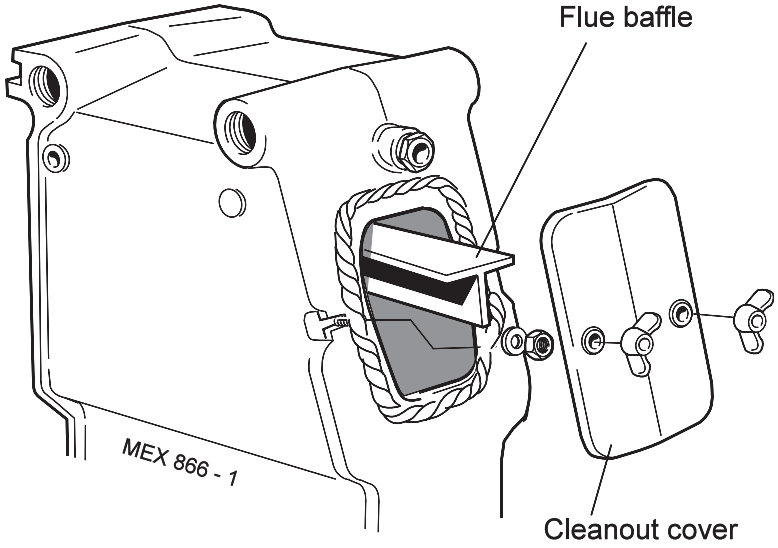

11 PREPARING THE WALL

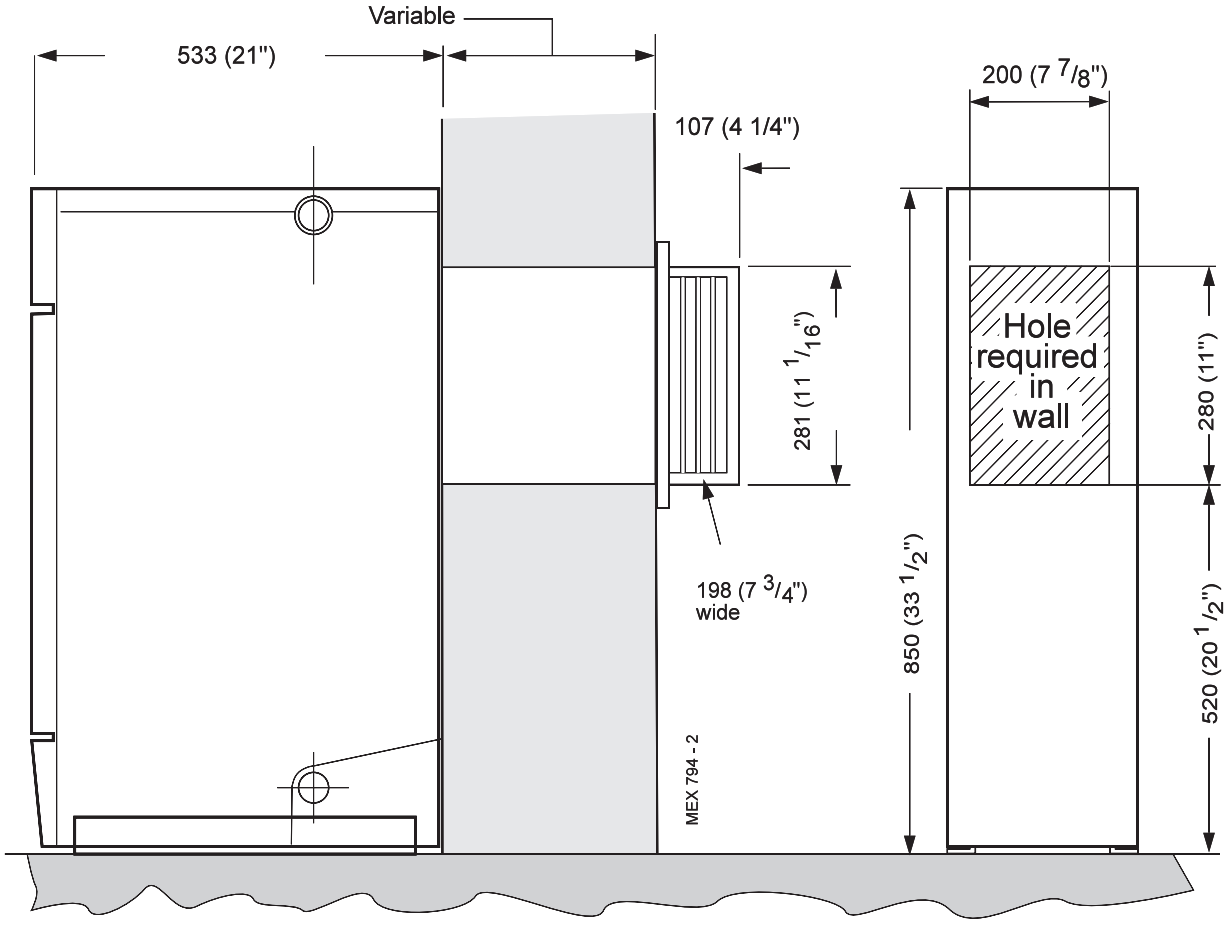

1. Cut the appropriate hole in the wall for insertion of the terminal assembly.

   Notes.

   a. *Make good the hole on the INSIDE of the building to the given dimensions BEFORE fitting the boiler, to facilitate sealing between the terminal and the wall when the boiler is in position.*

   b. *The terminal MUST NOT come into contact with a combustible material such as that used in non-standard construction of timber frame and plasterboard etc.*

2. Place the boiler in the selected position.

3. Make good the brickwork around the air duct inside.

12 FITTING THE FLUE ASSEMBLY

Flue Terminal assembly

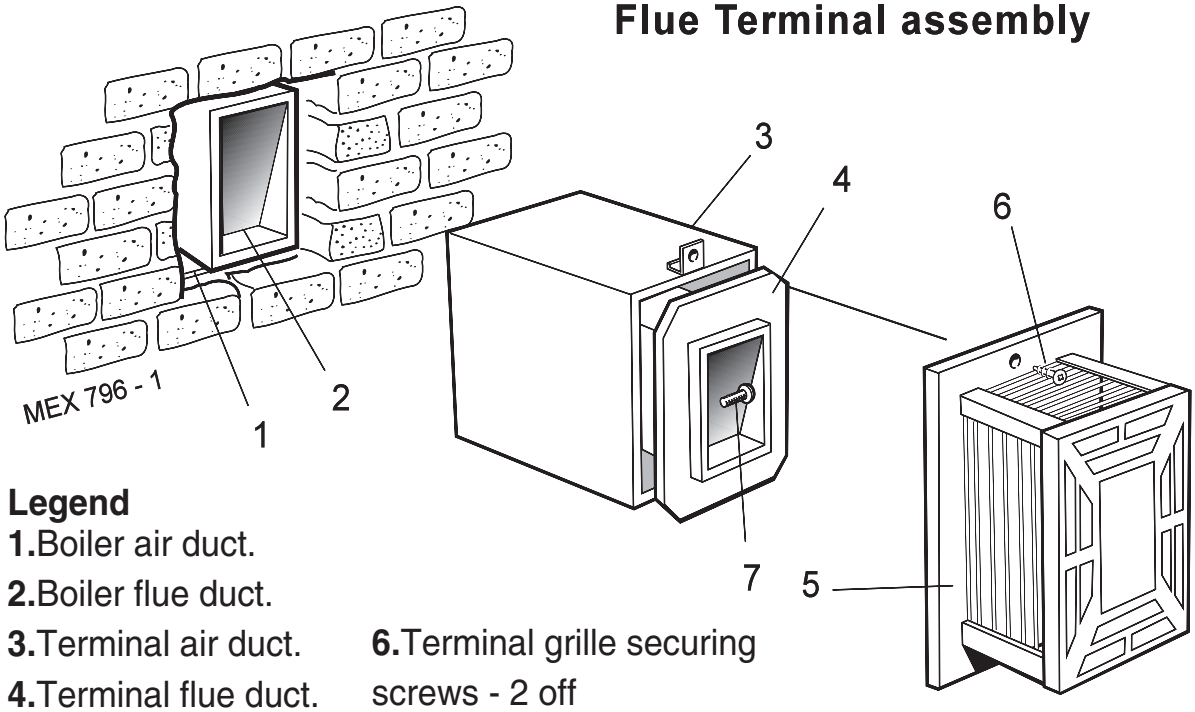

Legend

1.Boiler air duct.
2.Boiler flue duct.
3.Terminal air duct.
4.Terminal flue duct.
5.Terminal grille.
6.Terminal grille securing screws - 2 off
7.Terminal flue securingscrews - 4 off

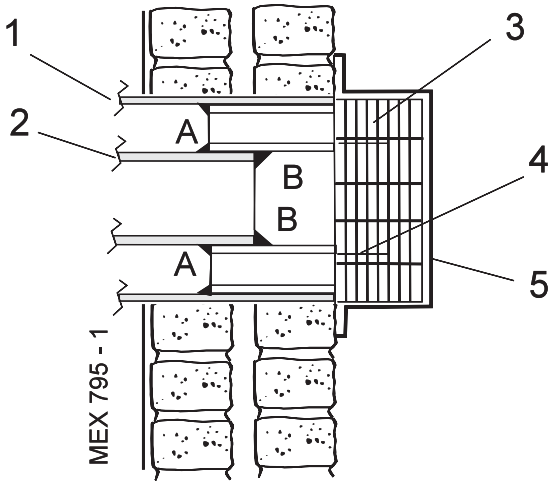

Flue terminal shown in position

1. Remove the 2 securing screws (6) and separate the terminal grille from the terminal assembly.
2. Remove the 4 securing screws (7) and separate the terminal flue duct from the terminal air duct.
3. From OUTSIDE of the building, pass the terminal air duct through the wall opening and slide it into the boiler air duct, locating it as shown.
4. Push the terminal air duct fully in until the fixing brackets contact the wall face.
5. Ensure that the duct is level and make good between the wall and duct, from OUTSIDE of the building.
6. From OUTSIDE of the building, seal the air duct join (A) with the mastic provided.
7. From OUTSIDE of the building, pass the terminal flue duct through the wall opening and slide it into the boiler flue duct. Locate it as shown and fix it in position with the 4 screws previously removed.
8. From OUTSIDE of the building seal the flue duct join (B) with the mastic provided.
9. Fasten the terminal grille to the duct assembly.

13 GAS CONNECTION

1. A MINIMUM working gas pressure of 20 mbar (8 in.w.g.) MUST be available at the boiler inlet, with the boiler operating.
2. Extend a gas supply pipe NOT LESS THAN 15mm (1/2") OD to the boiler and connect to the gas cock situated at the bottom LH side of the boiler. Attachment to the gas supply may be either left or right hand.
3. Test the gas installation for soundness and purge in accordance with BS.6891: 1988. Refer to Frame 24.

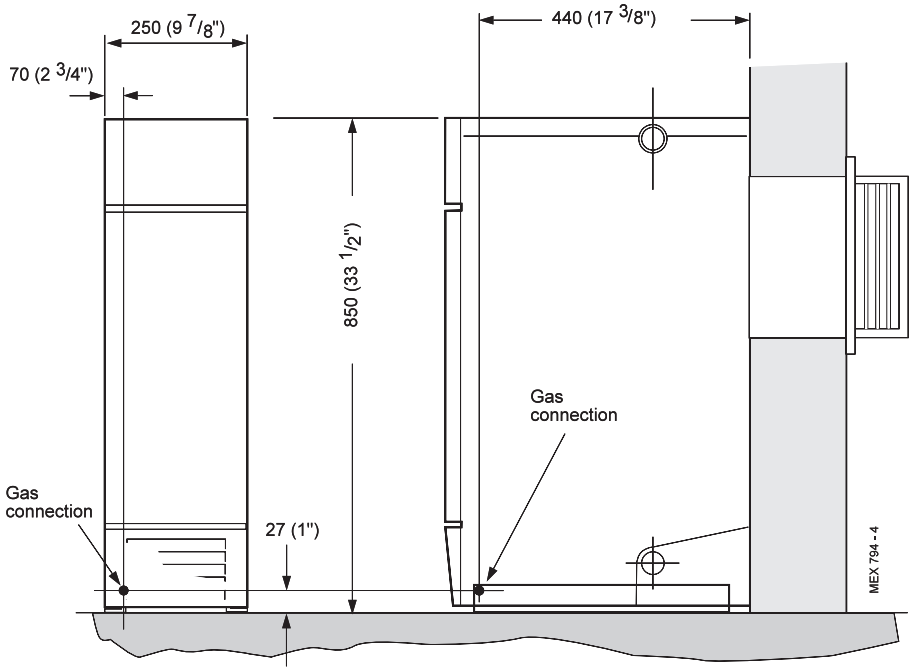

14 WATER CONNECTIONS

Notes.

a. Isolating valves must be fitted as close to the pump as possible.

b. The boiler is not suitable for use with a direct hot water cylinder.

c. Gravity connections MUST be at least 28 mm (1").

d. The front top and bottom plugged connections MUST NOT BE USED.

e. 2 spare blanking off plugs are provided in the Hardware Pack for use as necessary in the rear flow or return water connections.

1. Connect the system flow and return pipework to the boiler as appropriate. Refer to Frames 3 and 4 for guidance on system design.
2. Ensure that all valves are open. Fill and vent the system and check for water soundness.

15 ELECTRICAL CONNECTIONS

WARNING.

The appliance MUST be efficiently earthed.

A mains supply of 230 V ~ 50 Hz is required.

The fuse rating should be 3A.

All external controls and wiring MUST be suitable for mains voltage.

Wiring should be in 3-core PVC insulated cable NOT LESS than 0.75 mm^2 (24 x 0.2 mm) to BS.6500, Table 16.

Wiring external to the boiler MUST be in accordance with current I.E.E. (BS 7671) Wiring Regulations and local regulations. For Ireland reference should be made to the current ETCI rules for electrical installations.

Connection must be made in a way that allows complete isolation of the electrical supply - such as a double pole switch, having a 3mm (1/8") contact separation in both poles, or a plug and socket serving only the boiler and system controls.

The means of isolation must be accessible to the user after installation.

This connection should be readily accessible and be made adjacent to the boiler (except in the case of bathroom installations for domestic boilers where the point of connection to the mains MUST be outside of the bathroom).

16 INTERNAL WIRING

Flow and pictorial wiring diagrams are shown in Frames 17 and 18.

1. Remove the securing screw and lift off the control box cover.
2. Route the electrical leads into the box and wire into the terminal strip, as shown.

Notes.

a. Secure each lead with one of the cable clamps.

b. The mains lead connection MUST be made so that, should the lead slip from its anchorage, the current conductors become taut before the earthing conductor.

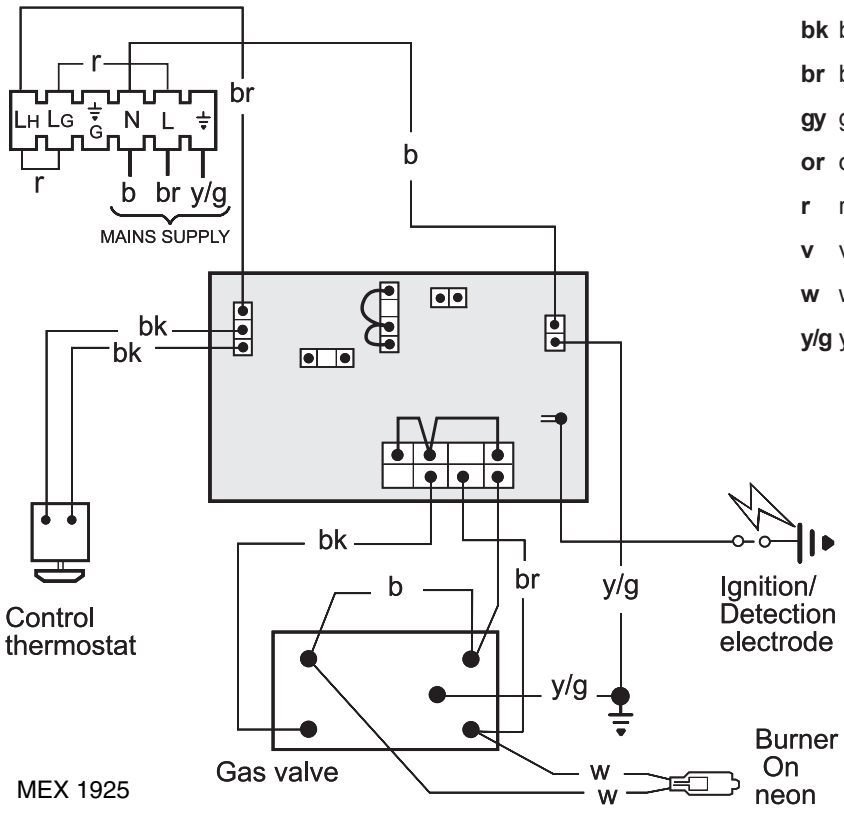

17 EXTERNAL CONTROLS

External wiring must be in accordance with the current I.E.E. (BS 7671) Wiring Regulations. For Ireland reference should be made to the current ETCI rules for electrical installations.

The wiring diagrams illustrated in Frames 19-21 cover the systems most likely to be fitted to this appliance.

For wiring external controls to the **Mexico Slimline RS445** boiler reference should be made to the system wiring diagrams supplied by the relevant manufacturer, in conjunction with the flow wiring diagram below and also Frame 18.

Difficulty in wiring should not arise, providing the following directions are observed:

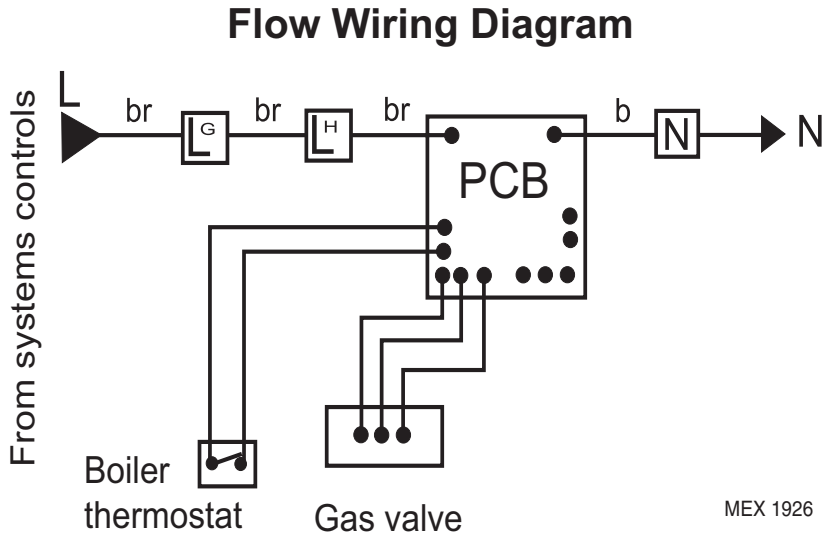

1. Controls that switch the system ON and OFF, e.g. a time switch, MUST be wired, in series, in the live mains lead to the boiler.
2. Controls that override an ON/OFF control, e.g. a frost thermostat, MUST be wired into the mains lead, in parallel, with the control(s) to be overridden. Refer to Frame 22.
3. If a proprietary system is used, follow the instructions supplied by the manufacturer.

Note. *If there are no external controls the circulating pump MUST be wired into the control box.*

18 PICTORIAL WIRING

LEGEND

b blue
bk black
br brown
gy grey
or orange
r red
v violet
w white
y/g yellow/green

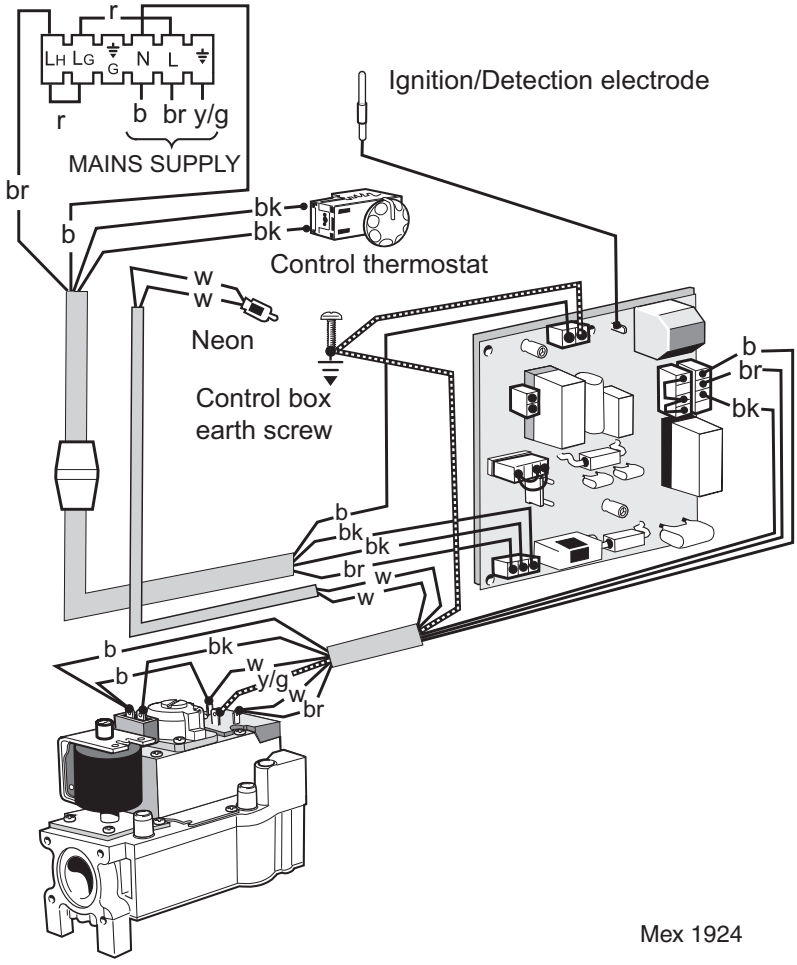

19 MID POSITION VALVE

Pumped Only

Notes.

1. *Some earth wires are omitted for clarity. Ensure proper earth continuity when wiring.*
2. *Numbering of terminals on thermostats is specific to the manufacturer indicated.*
3. *This is a fully controlled system - set the boiler thermostat to maximum.*
4. *'Switchmaster Midi' is similar in operation but the wiring differs slightly; see manufacturer's literature.*

	Room Thermostat Terminal			Mid Position valve details	Cylinder Thermostat Terminal		
	1	3	2	HONEYWELL Y PLAN V4073A 1039	1	2	c
TLX 2259 lub 2284	3	1	4	PEGLER 'Unishare' DT 1701 etc.	1	2	3
	1	2	4	LANDIS & GYR 'LGM' SK3 - LT2701	2	3	1
	1	3	-	A. C. L. 679. H. 340.30.UO	1 bk	2 y	3 r
RTE RTM/RTC	1 3	2 1	4 N	DRAYTON Flowshare 2	2	3	1
	1	3	4	SOPAC Centra Share ZV20 - EB MID	1	2	c
	2	1	4	DANFOSS DMV - 3M	n. c.	n. o.	com.
				SWITCHMASTER see note 4			

MEX 6037

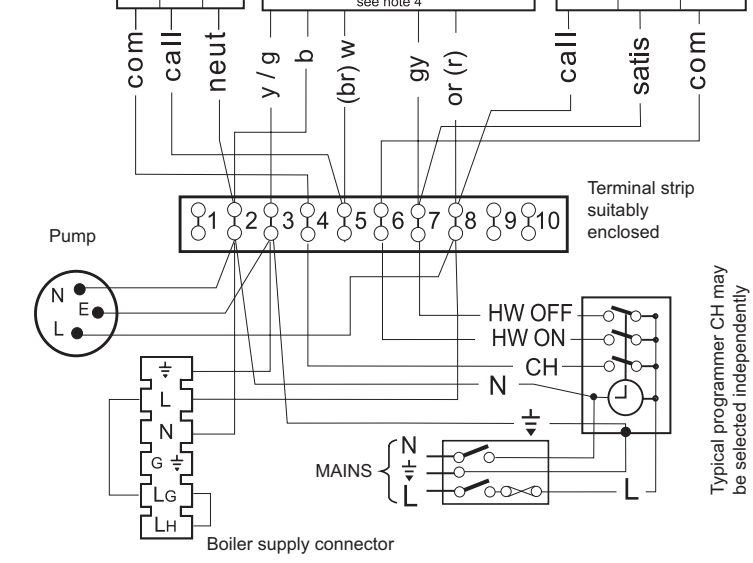

LEGEND

b blue
bk black
br brown
gy grey
or orange
r red
v violet
w white
y/g yellow/green

20 TWO SPRING CLOSED VALVES

Pumped Only

Notes.

1. *Some earth wires are omitted for clarity. Ensure proper earth continuity when wiring.*
2. *Numbering of terminals on thermostats is specific to the manufacturer.*
3. *This is a fully controlled system - set the boiler thermostat to maximum.*
4. *'Switchmaster Autozone' has grey and orange auxiliary switch leads but the GREY (NOT the ORANGE) wire must be connected to the incoming live supply.*

LEGEND

b blue
bk black
br brown
gy grey
or orange
r red
v violet
w white
y/g yellow/green

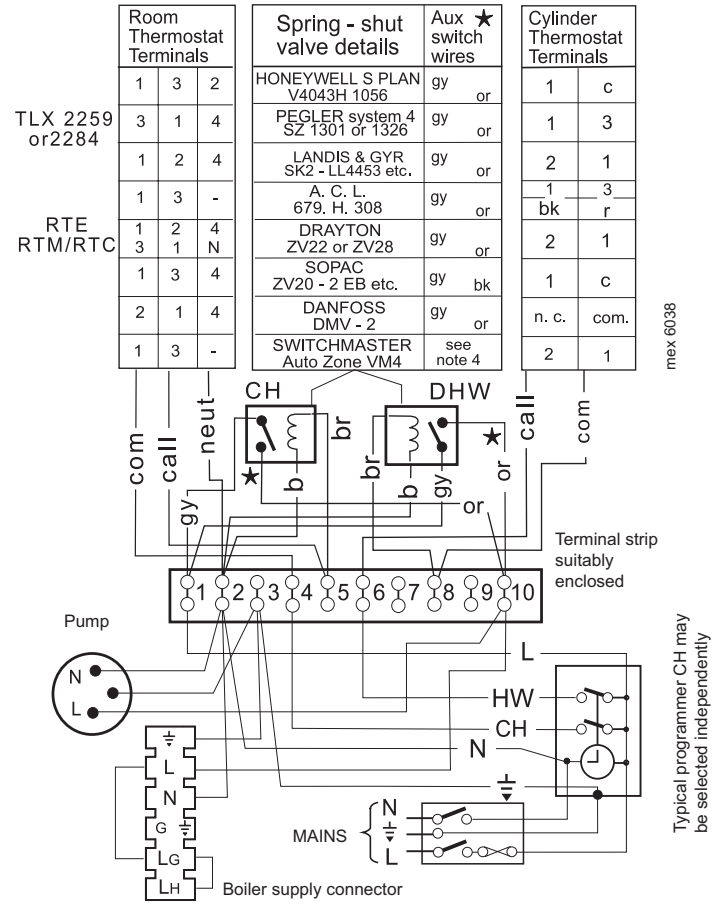

21 HONEYWELL 'C' PLAN

Gravity HW & Pumped CH

Notes.

1. *Some earth wires are omitted for clarity. Ensure proper earth continuity when wiring.*
2. *Numbering of terminals on thermostats is specific to the manufacturer.*

LEGEND

b blue
bk black
br brown
gy grey
or orange
r red
v violet
w white
y/g yellow/green

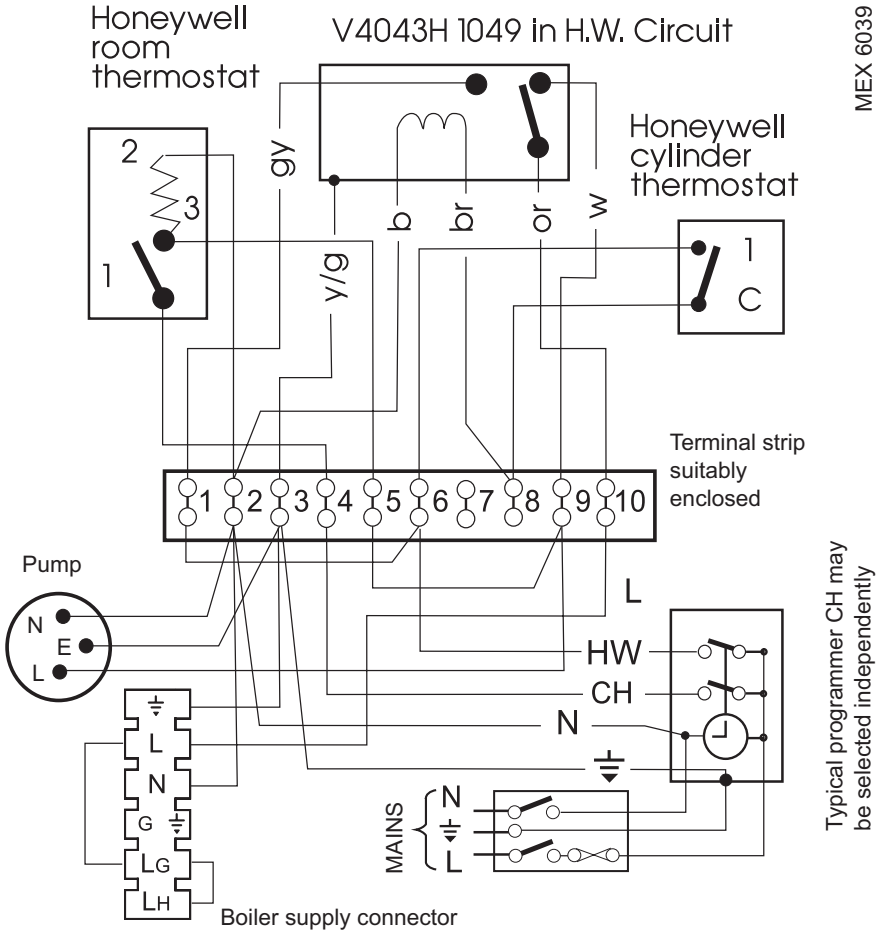

22 FROST PROTECTION

Central heating systems fitted wholly inside the house do not normally require frost protection as the house acts as a 'storage heater' and can normally be left at least 24 hrs. without frost damage. However, if parts of the pipework run outside the house or if the boiler will be left off for more than a day or so then a frost 'stat should be wired into the system.

This is usually done at the programmer, in which case the programme selector switches are set to OFF and all other controls MUST be left in the running position.

The frost 'stat should be sited in a cold place but where it can sense heat from the system.

Wiring should be as shown, with minimal disturbance to other wiring of the programmer.

Designation of the terminals will vary, but the programmer and thermostat manufacturer's leaflets will give full details.

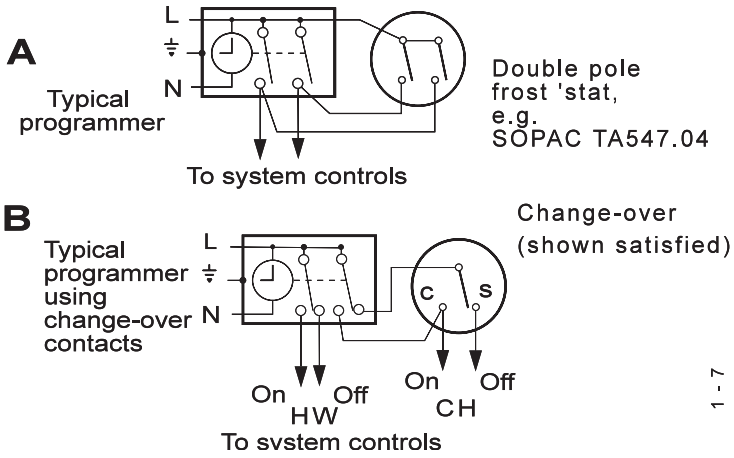

Diagram A shows a double pole frost thermostat, which should suffice for all systems which do not use the OFF terminals of the programmer.

Diagram B shows a 'change-over' frost thermostat, which will cover most systems which do use CH OFF. If, however, on such a system the HW pipework is in an isolated part of the house, a second frost thermostat may be used to protect it.

If in doubt, ask your installer for advice.

23 FITTING THE CASING

1. Offer up the LH side panel and secure the panel to the baseplate and heat exchanger.
2. Repeat step 1 to refit the RH side panel.
3. Place the top panel on top of the side panels.
4. Secure the top panel to the side panels with the screws at the front.

IMPORTANT.

Wiring within the boiler casing must be neatly routed and MUST NOT be allowed to touch the burner front plate, or the cleanout cover and the collector hood.

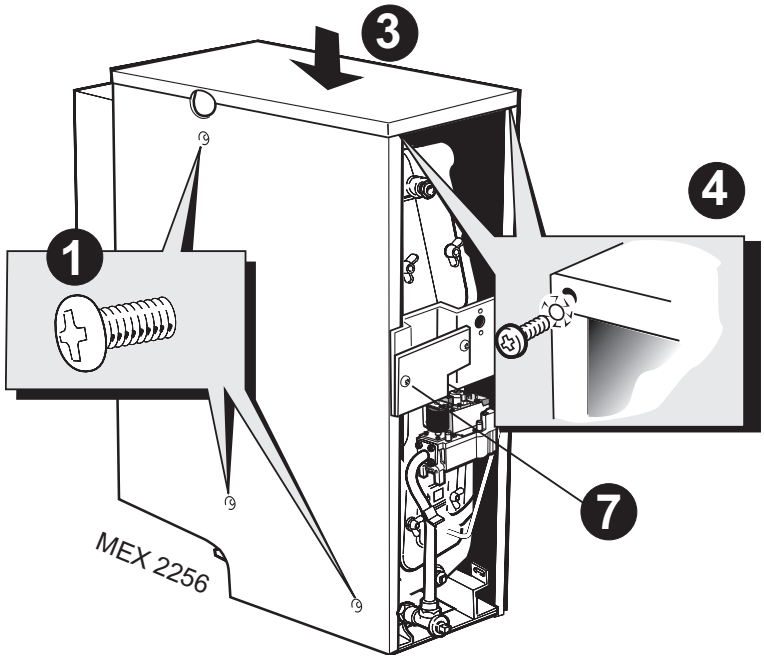

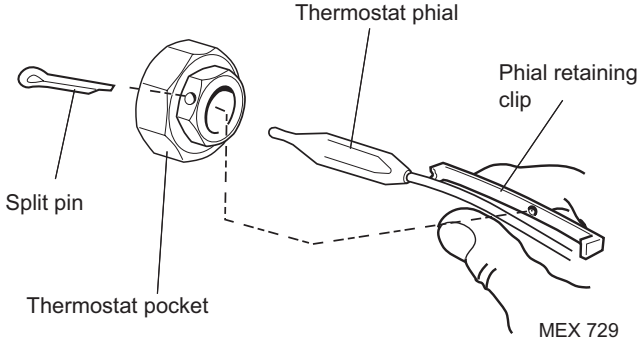

5. Replace the control box cover and refit the control panel, using the screws previously removed.
6. Insert the thermostat phial into the thermostat pocket. Take care not to kink the thermostat capillary as it is unwound, and secure it with the split pin as shown.
7. Secure the PCB box to the casing side panels.
8. Reconnect the in-line connector and refit the Burner On neon.

24 COMMISSIONING AND TESTING

The Benchmark Log Book or equivalent self certification should be completed and signed to demonstrate compliance with Building Regulations.

A. ELECTRICAL INSTALLATION

1. Checks to ensure electrical safety should be carried out by a competent person.
2. ALWAYS carry out preliminary electrical system checks, i.e. earth continuity, polarity, resistance to earth and short circuit using a suitable test meter.

B. GAS INSTALLATION

1. The whole of the gas installation, including the meter, MUST be inspected and tested for soundness, and purged in accordance with the recommendations of BS. 6891. In IE refer to I.S.813:2002.
2. Purging air from the gas installation may be expedited by loosening the union on the gas service cock on the boiler and purging until gas is detected.
3. Retighten the union and check for gas soundness.

C. WATER CIRCULATING SYSTEM

1. The whole of the system should be thoroughly flushed out with cold water WITHOUT the pump in position. Ensure that all valves are open.
2. With the pump fitted the system should be filled and air locks cleared. Check for water soundness.

WARNING. Whilst effecting the required gas soundness test and purging air from the gas installation, open all windows and doors, extinguish naked lights and **DO NOT SMOKE.**

25 INITIAL LIGHTING

LEGEND

A Gas control valve
B Burner pressure test point
C Main burner pressure adjuster
D Inlet pressure test point
E Gas service cock
F Sightglass
G Main Burner On neon
H Boiler thermostat knob
J Overheat thermostat reset button (optional)

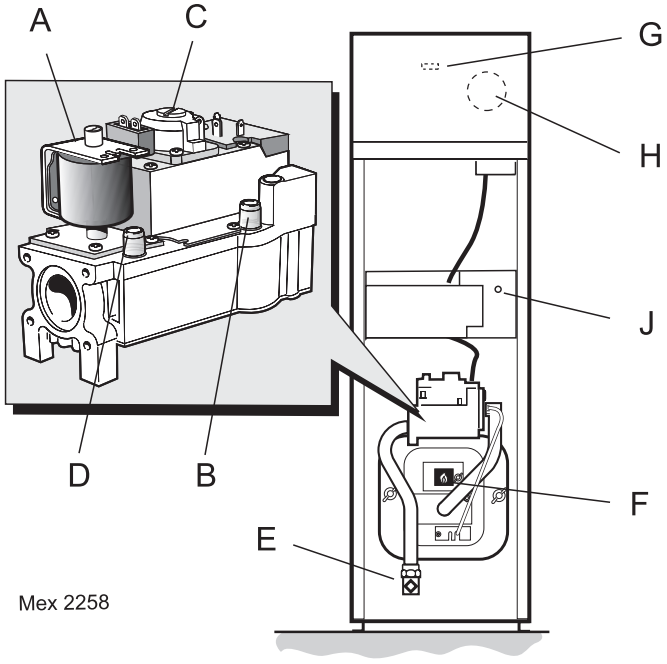

Mex 2258

TO LIGHT THE BOILER

1. Check that all the drain cocks are closed and any valves in the flow and return are open.
2. Check that the gas service cock (E) is OPEN and the boiler mains on/off switch is OFF.
3. Slacken the screw in the burner pressure test point (B) and connect a gas pressure gauge via a flexible tube.
4. Switch the electricity supply ON and check that all external controls are calling for heat.
5. Set the boiler thermostat knob (G) to position 6. The pilot solenoid valve should open and the intermittent spark commence, continuing until the pilot is established. The main burner will then cross-light smoothly. If this sequence does not occur, refer to the Fault Finding section.
6. Test for gas soundness around ALL boiler gas components using leak detection fluid.
7. Operate the boiler for 10 minutes to stabilise the burner temperature.
8. The boiler is preset at the factory. If the burner setting requires adjustment remove the sealing cap and turn the adjusting screw clockwise to increase/anticlockwise to decrease the pressure until the required burner pressure is achieved. Refer to Table 2, page 2. Refit the sealing cap.
9. Set the boiler mains on/off switch to OFF.
10. Remove the pressure gauge and tube. Retighten the sealing screw in the pressure test point.
11. Turn ON and check for gas soundness at the pressure test point.
12. Refit the grille and lower front panel, and secure with the fixing screws.

26 GENERAL CHECKS

Make the following checks for correct operation:

1. Turn the boiler thermostat OFF and ON to check that the main burner is extinguished and relit in response.

2. Set the boiler thermostat knob to position 6 and operate the mains on/off switch. Check that the main burner lights and extinguishes in response.

3. Check that the programmer, if fitted, and all other system controls function correctly.

Operate each control separately and check that the main burner or circulating pump (as the case may be) responds.

4. Water Circulation System

a. With the system HOT, examine all water connections for soundness.

b. With the system still hot, turn off the gas, water and electricity supplies to the boiler and drain down, in order to complete the flushing process.

c. Refill and vent the system, clear all air locks and again check for water soundness.

d. Balance the system.

5. Finally, set the controls to the user's requirements, refit the lower panel and close the controls door.

Notes.

a. *If an optional programmer kit is fitted refer to the separate Programmer Kit Installation Instructions and User's Instructions.*

b. *The temperatures quoted below are approximate and vary between installations.*

Thermostat Knob Setting	Flow Temperature °C	°F
1	54	130
2	60	140
3	66	150
4	71	160
5	77	170
6	82	180

27 HANDING OVER

After completing the installation and commissioning of the system the installer should hand over to the householder by the following actions:

1. Hand the User's Instructions to the householder and explain his or her responsibilities under the current Gas Safety (Installation and Use) Regulations or rules in force.

2. Draw attention to the lighting instruction label affixed to the inside of the controls door.

3. Explain and demonstrate the lighting and shutting down procedures.

4. The operation of the boiler and the use and adjustment of ALL system controls should be fully explained to the householder, to ensure the greatest possible fuel economy consistent with household requirements of both heating and hot water consumption.

Advise the User of the precautions necessary to prevent damage to the system and to the building, in the event of the system remaining inoperative during frosty conditions.

5. Explain the function and the use of the boiler thermostat and external controls.

6. Explain and demonstrate the function of time and temperature controls, radiator valves etc., for the economic use of the system.

7. If an optional Programmer Kit is fitted then draw attention to the Programmer User's Instructions and hand them to the householder.

8. After installation, commissioning and customer hand-over please complete the benchmark appliance log book and leave this with the customer. For IE, it is necessary to complete a "Declaration of Conformity" to indicate compliance to I.S. 813:2002.

9. Stress the importance of regular servicing by a CORGI registered installer and that a comprehensive service should be carried out AT LEAST ONCE A YEAR. In IE servicing work must be carried out by a Competent Person.

28 SCHEDULE

To ensure the continued safe and efficient operation of the appliance, it is recommended that it is checked at regular intervals and serviced as necessary. The frequency of servicing will depend upon the installation condition and usage but should be carried out at least annually .

It is the law that any service work must be carried out by a CORGI registered installer. In IE servicing work must be carried out by a Competent Person.

a. Light the boiler and carry out a pre-service check, noting any operational faults.

b. Clean the main burner.

c. Clean the heat exchanger.

d. Clean the main injectors.

e. Check that the flue terminal is unobstructed and that the flue system, including the flue cleanout cover, is sealed correctly.

f. If the appliance has been installed in a compartment, check that the ventilation areas are clear.

The servicing procedures are covered more fully in Frames 29 to 34 and MUST be carried out in sequence.

WARNING. Always turn OFF the gas supply at the gas service cock and switch OFF and DISCONNECT the electrical supply to the appliance *BEFORE SERVICING.*

IMPORTANT. After completing the servicing or exchange of components always test for gas soundness and carry out functional checks as appropriate.

29 BOILER CASING REMOVAL

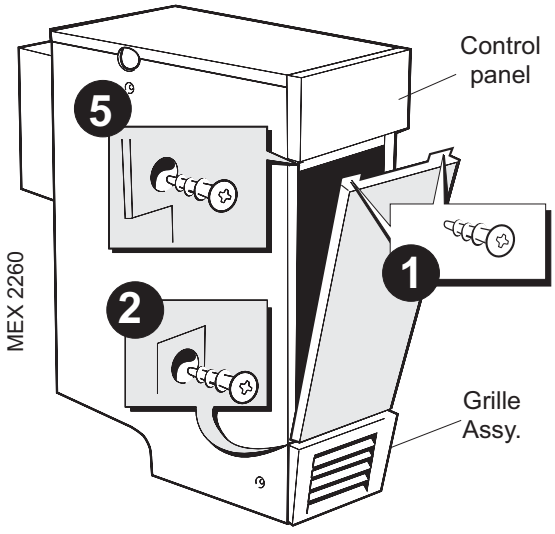

1. Undo the 2 screws and lift off the lower front panel.
2. Remove 2 screws and lift off the grille assembly.
3. Disconnect the in-line connector on the PCB lead.
4. Remove the Burner On neon cable from the back of the control panel.
5. Remove the 2 screws securing the control panel and disengage the panel by lowering and pulling it forward.

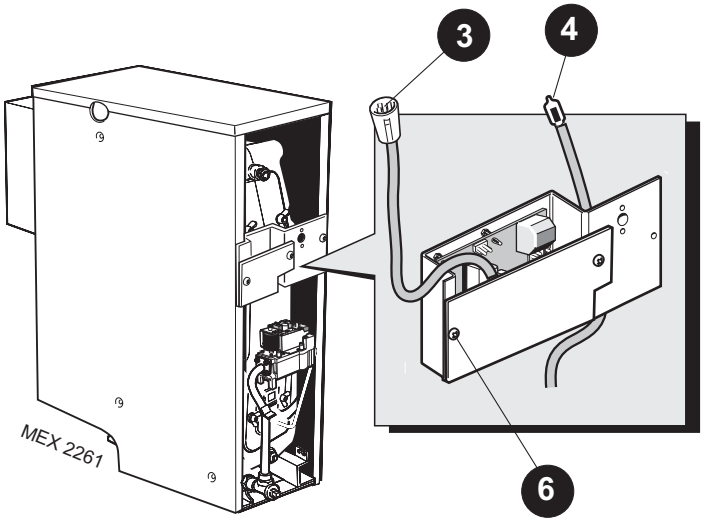

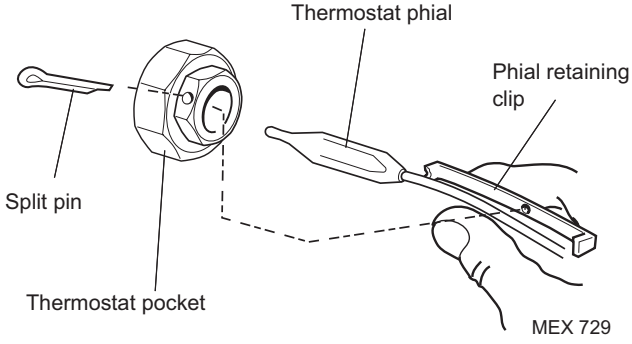

6. Undo the 2 screws securing the PCB box to the side panels and carefully rest it on the top of the gas valve.
7. Remove the thermostat phial from the pocket, as shown.
8. If the boiler is not fitted under a work top, access for flue cleaning will be improved by removing the top panel.

30 BURNER AND CONTROLS ASSEMBLY

1. Remove the 2 screws and lift off the front panel and remove the grille assembly from the casing. Refer to Frame 29.
2. Disconnect the electrical leads from the gas valve.
3. Disconnect the ignition lead from the PCB.

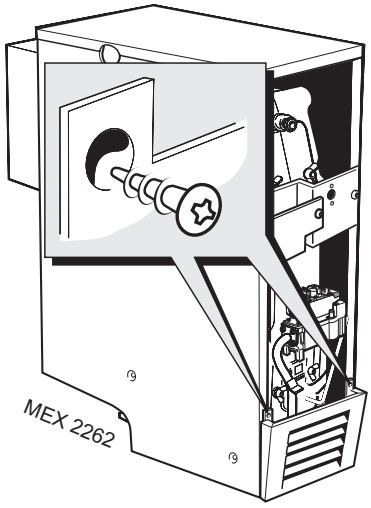

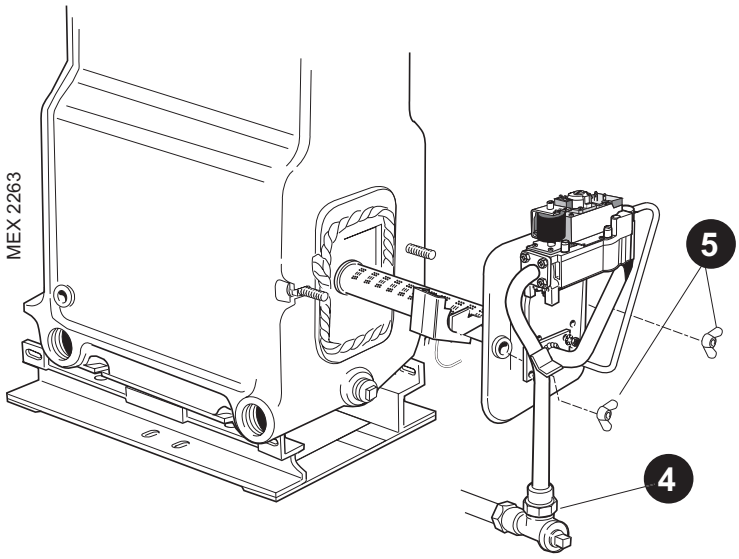

4. Undo the gas service cock union nut.
5. Remove the 2 wing nuts and withdraw the burner and controls assembly, complete, from the boiler.
6. When replacing a defective main burner bar it is most important that the baffles are fitted to the new burner.

31 CLEANING THE BURNER ASSEMBLY

1. Brush off any deposits that may have fallen onto the burner head, ensuring that the flame ports are unobstructed, and remove any debris that may have collected.

   Note. *Brushes with metallic bristles MUST NOT be used.*

2. Remove the main burner injector. Check, clean or replace, as required.
3. Refit the injector, using an approved jointing compound.
4. Inspect the pilot burner and ignition electrode; ensure they are clear and in good condition.

   Check that:

   a. The pilot burner is clean and unobstructed.

   b. The pilot shield is clean and unobstructed.

   c. The ignition electrode is clean and undamaged.

   d. The ignition lead is in good condition and securely connected.

   e. The spark gap is correct. Refer to Frame 37.

   f. The sightglass is clean and undamaged.

5. Clean or renew components as necessary.

32 CLEANING THE FLUEWAYS

1. Lift off lower front panel and remove the grille assembly. Refer to Frame 29.
2. Undo the gas cock union. Remove the burner assembly.
3. Undo the 2 wing nuts to remove the cleanout cover.
4. Lift out the flue baffle.
5. Remove all loose deposits from the heat exchanger, especially from between the fins, using a suitable brush.
   Remove all debris from the combustion chamber base
6. Check that the flue outlet duct is unobstructed.

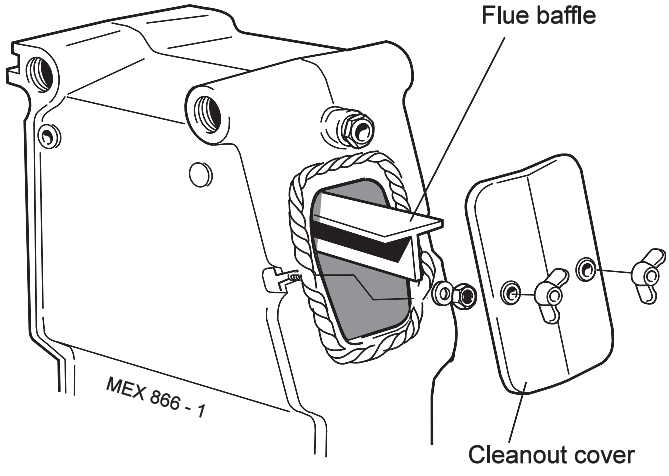

33 REASSEMBLY

Reassemble the boiler in the following order :

1. Refit the flue baffle into the boiler flueway, ensuring that it is correctly repositioned. Refer to Frame 10.
2. Refit the flue cleanout cover, renewing any damaged or deteriorating sealing gasket.
3. Refit the casing top panel.
4. Check the sightglass in the front plate - clean or renew as necessary.
5. Renew any damaged or deteriorating front plate gasket.
6. Refit the burner and controls assembly.
7. Refit the thermostat phial and phial retaining clip, ensuring that they are correctly located in the thermostat pocket and secured by the split pin. Refer to Frame 29.
8. Refit the PCB box to the side panels.
9. Refit the control panel.
10. Reconnect the Burner On neon cable to the back of the control panel
11. Refit the in-line connector on the PCB lead.
12. Remake the electrical connections to the gas valve.
13. Reconnect the gas service cock and electrical wiring.
14. Refit the grille assembly.

34 GAS PRESSURE ADJUSTMENT

1. **Pilot Pressure**
   Pilot adjustment is factory set to maximum and no adjustment is possible,

2. **Main Burner Pressure**
   After servicing, reference should be made to Table 2, page 2, which quotes details of the output with the burner pressure and heat input.

Any required adjustments should be made using the pressure adjustment screw. Refer to Frame 25, 'Initial Lighting'.

Refit the lower front panel in reverse order. Refer to Frame 29.

REPLACEMENT OF PARTS

35 GENERAL

When replacing any component:

1. Isolate the electricity supply.
2. Remove the lower front panel and grille assembly.
3. Turn off the gas supply at the boiler.

Note. *In order to assist fault finding, the control box PCB is fitted with 2 indicator lights which represent the following boiler conditions:*

Neon I3 Mains electricity ON.

Neon SG1 Flashes to indicate ignition operation (stops after detection.)

For replacement of programmer units refer to the separate Programmer Kit instructions.

The boiler MUST NOT be operated if the casing is not fitted.

36 SIGHTGLASS REPLACEMENT

1. Refer to Frame 35.
2. Unfasten the 2 wing nuts and washers. Remove the assembly from the front plate.
3. Fit the new sightglass and reassemble, as shown.
4. Retighten the 2 wing nuts to ensure an airtight seal. *Do NOT overtighten.*

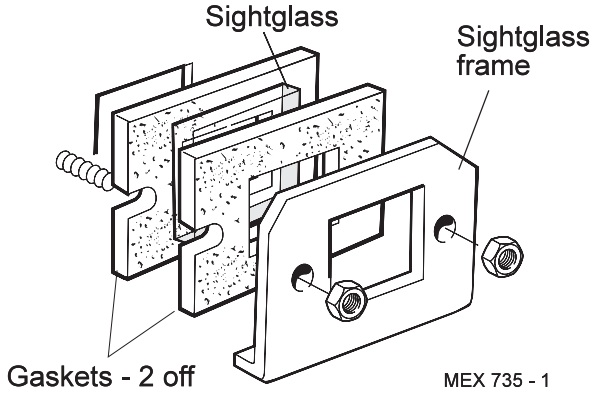

37 PILOT BURNER REPLACEMENT

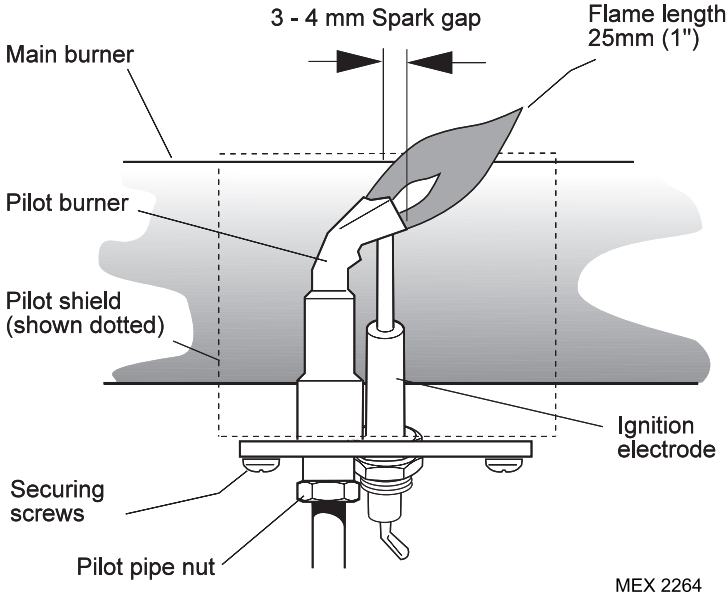

1. Refer to Frame 35.
2. Undo the 2 screws, lift off the front panel and remove the grille assembly. Refer to Frame 29.
3. Disconnect the electrical leads from the gas valve.
4. Disconnect the ignition lead from the PCB.
5. Undo the gas cock union. Remove the 2 wing nuts and withdraw the burner and controls assembly, complete, from the boiler.
6. Remove the ignition electrode. Refer to Frame 42.
7. Undo the pilot supply pipe connection and ease clear of the pilot burner. DO NOT LOSE the pilot injector, which is a push-fit in the pilot burner housing.
8. Remove the 2 securing screws and washers, and withdraw the pilot burner.
9. Fit the new pilot burner and reassemble in reverse order, ensuring that:
   - **a.** The injector is in position when refitting the pilot supply.
   - **b.** A gas-tight joint is made.
   - **c.** The spark gap is correct.
10. Reassemble in reverse order.

38 CONTROL THERMOSTAT REPLACEMENT

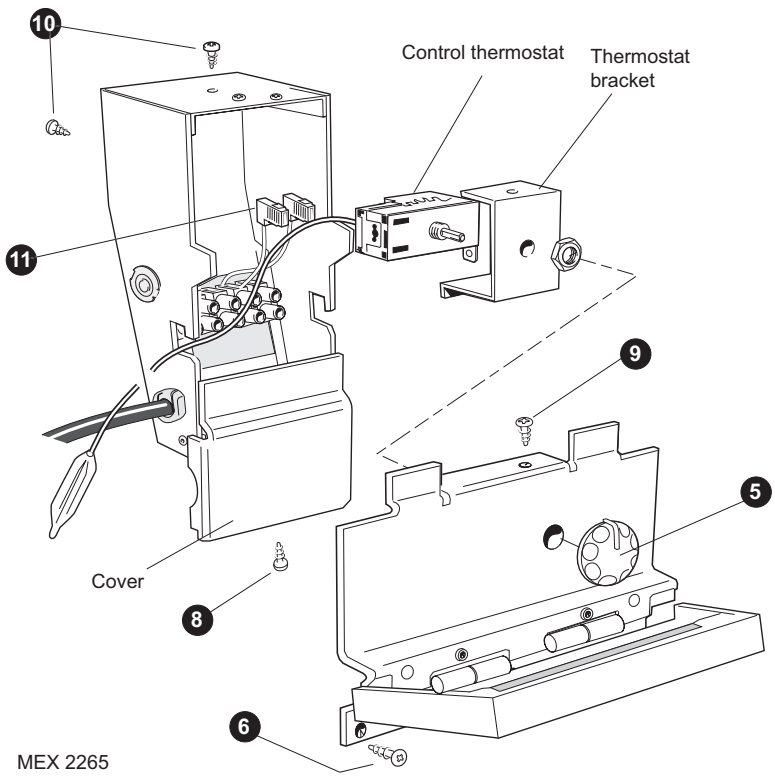

1. Refer to Frame 35.
2. Remove 2 screws and lift off the front lower panel. Refer to Frame 29.
3. Disconnect the in-line connector on the PCB lead.
4. Remove the Burner On neon cable from the back of the control panel.
5. Pull off the thermostat knob.
6. Remove the 2 screws and pull down the control panel tabs clear of the top panel.
7. Remove the thermostat phial from the pocket. Refer to Frame 29.
8. Remove the bottom screw and remove the cover.
9. Remove the top screw and ease the control box off the control panel.
10. Remove the 2 screws to release the thermostat bracket.
11. Disconnect the electrical leads.
12. Unscrew the thermostat nut to withdraw the thermostat.
13. Fit the new thermostat and reassemble in reverse order.

39 CONTROL PANEL REPLACEMENT

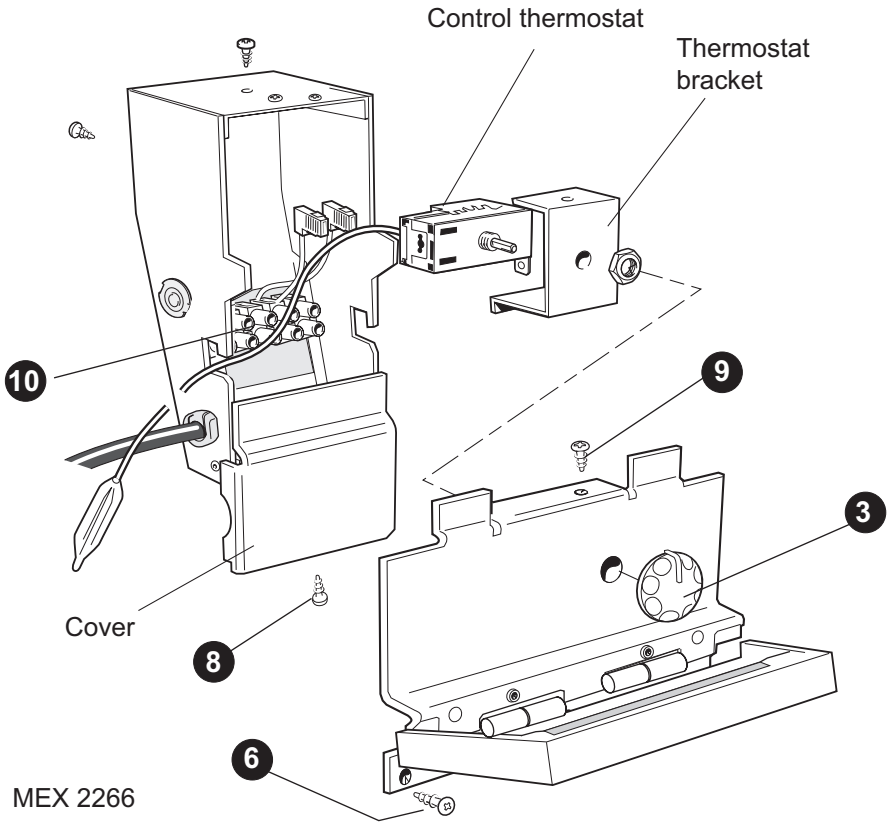

1. Refer to Frame 35.
2. Remove the 2 screws and lift off the lower front panel. Refer to Frame 29.
3. Pull off the thermostat knob.
4. Disconnect the in-line connector on the PCB lead.
5. Remove the Burner On neon cable from the back of the control panel.
6. Unscrew the 2 screws and pull down the control panel so that the 2 tabs clear the top panel.
7. Remove the thermostat phial from the pocket. Refer to Frame 29.
8. Remove the bottom screw and remove the cover from the control box.
9. Remove the top screw and ease the control box off the control panel.
10. Disconnect the mains electrical supply from the terminal strip and release from its clamp.
11. On the new control box gain access to the control thermostat as described above.
12. Assemble new control box and panel and fit to the casing in reverse order.

40 OVERHEAT THERMOSTAT REPLACEMENT

1. Refer to Frame 35.
2. Remove the 2 screws and lift off the lower front panel. Refer to Frame 29.
3. Disconnect the in-line connector on the PCB lead.
4. Remove the Burner On neon cable from the back of the control panel.
5. Remove the 2 screws and pull down the control panel tabs to clear the top panel.
6. Remove the split pin at the thermostat pocket and withdraw the phials from the pocket.
7. Remove the thermostat retaining nut and withdraw the thermostat from the PCB box.
8. Transfer the electrical leads from the old thermostat to the replacement (polarity is not important).
9. Fit the new thermostat, ensuring that the alignment peg on the thermostat sits in the small hole adjacent to the main fixing hole.
10. Reassemble in reverse order.
11. Replace the lower front panel and secure with the 2 fixing screws.
12. Check the operation of the boiler.

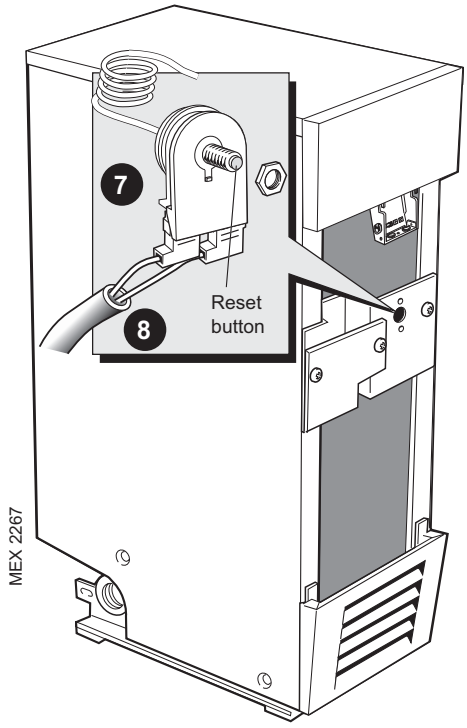

41 IGNITION LEAD REPLACEMENT

1. Refer to Frame 35.
2. Remove the 2 screws, lift off the front panel and remove the grille assembly. Refer to Frame 29.
3. Disconnect the electrical leads from the gas valve.
4. Disconnect the ignition lead from the PCB.

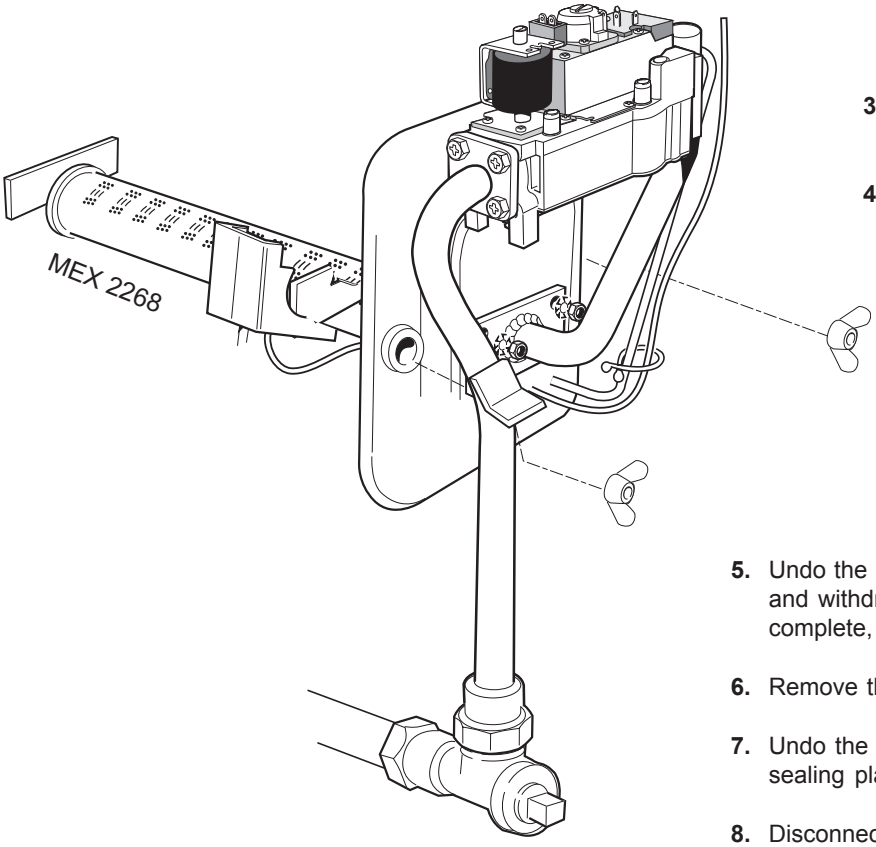

5. Undo the gas cock union. Remove the 2 wing nuts and withdraw the burner and controls assembly, complete, from the boiler.
6. Remove the purse clip.
7. Undo the 2 securing nuts and washers. Remove the sealing plate and gasket.
8. Disconnect the ignition lead from the base of the electrode and withdraw the lead.
9. Fit the new lead and reassemble in reverse order.

42 IGNITION ELECTRODE REPLACEMENT

1. Refer to Frame 35.
2. Remove the 2 screws, lift off the lower front panel then remove the grille assembly. Refer to Frame 29.
3. Disconnect the electrical leads from the gas valve.

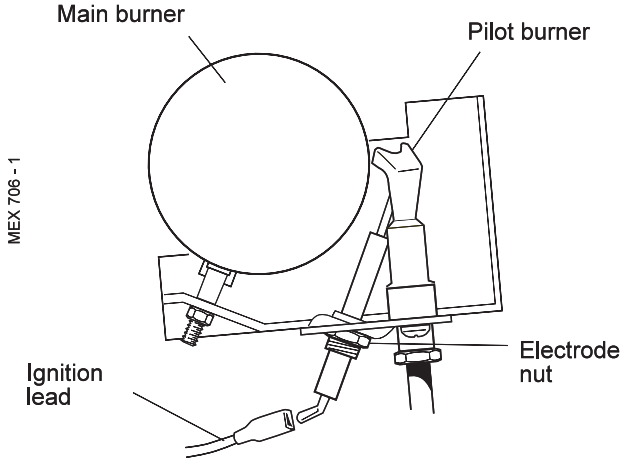

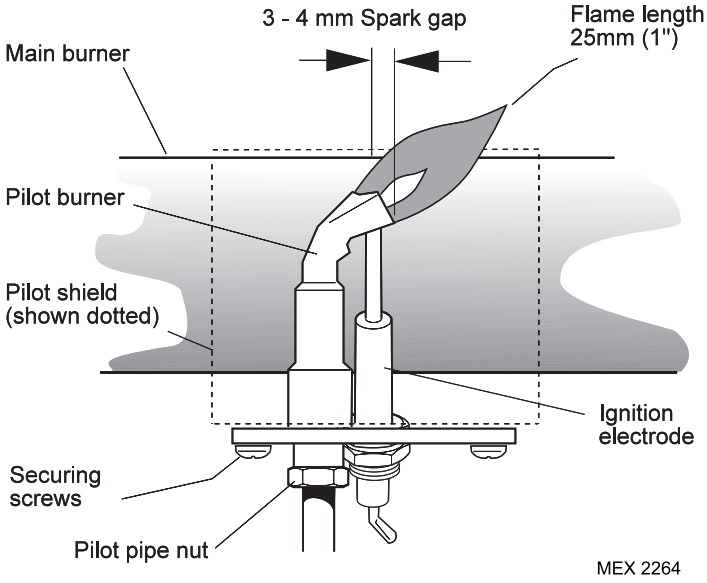

4. Disconnect the ignition lead from the PCB.
5. Undo the gas cock union. Remove the 2 wing nuts and withdraw the burner and controls assembly, complete, from the boiler.
6. Remove the electrode retaining nut and withdraw the electrode.
7. Fit the new electrode.
8. Reassemble in reverse order.

43 MAIN BURNER REPLACEMENT

1. Refer to Frame 35.
2. Remove the 2 screws, lift off the lower front panel then remove the grille assembly. Refer to Frame 29.
3. Disconnect the electrical leads from the gas valve.
4. Disconnect the ignition lead from the PCB.
5. Undo the gas cock union. Remove the 2 wing nuts and withdraw the burner and controls assembly, complete, from the boiler.
6. Undo the nut securing the pilot bracket to the main burner and remove the pilot bracket.

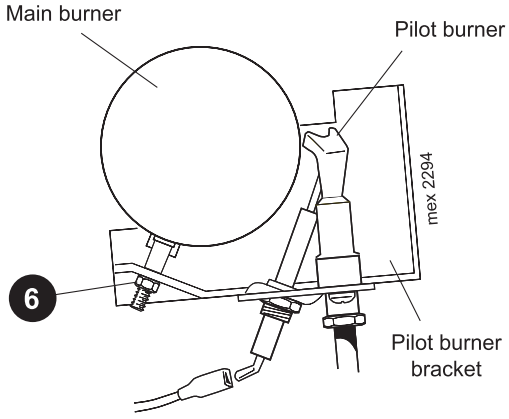

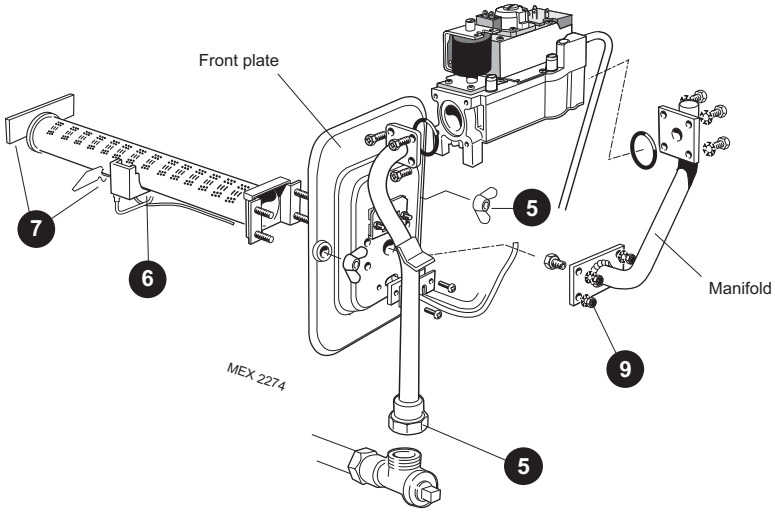

7. Remove the nut securing the burner baffle to the burner.
8. Remove the 2 screws securing the pilot burner and pull the assembly clear of the main burner.
9. Remove the 4 nuts and washers securing the main burner to the front plate and manifold. Withdraw the burner.
10. Fit the new burner and assemble in reverse order, taking care not to damage the main burner injector, which is screwed into the burner manifold.

    Note. *Ensure the burner baffle is fitted to the new burner.*

44 MAIN BURNER INJECTOR REPLACEMENT

1. Refer to Frame 35.
2. Remove the 2 screws, lift off the lower front panel then remove the grille assembly. Refer to Frame 29.
3. Disconnect the electrical leads from the gas valve.
4. Disconnect the ignition lead from the PCB.
5. Undo the gas cock union. Remove the 2 wing nuts and withdraw the burner and controls assembly, complete, from the boiler.
6. Undo the pilot supply connection.
7. Undo the manifold securing nuts and remove the manifold from the front plate.
8. Unscrew the burner injector from the manifold.
9. Fit the new injector, using an approved jointing compound, and reassemble in reverse order.

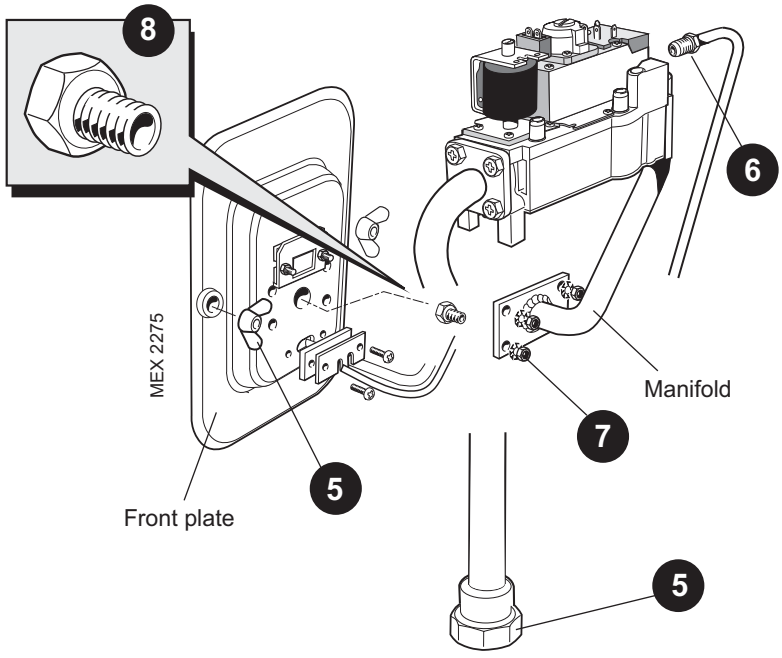

45 GAS VALVE REPLACEMENT

1. Refer to Frame 35.
2. Remove the 2 screws, lift off the lower front panel then remove the grille assembly. Refer to Frame 29.
3. Disconnect the electrical leads from the gas valve.
4. Disconnect the ignition lead from the PCB.
5. Undo the gas cock union. Remove the 2 wing nuts and withdraw the burner and controls assembly, complete, from the boiler.
6. Undo the pilot at the gas valve.
7. Unfasten the 4 screws securing the gas inlet pipe to the LH side of the gas valve.
8. Unfasten the 4 screws securing the gas manifold. The 2 sealing 'O' rings should be discarded and new 'O' rings fitted.
9. Fit the new gas valve, ensuring that:
   - **a.** The valve is fitted the correct way round - an arrow engraved on the valve indicates the direction of flow.
   - **b.** The sealing 'O' rings supplied with the valve are correctly fitted at the inlet and outlet flanges.

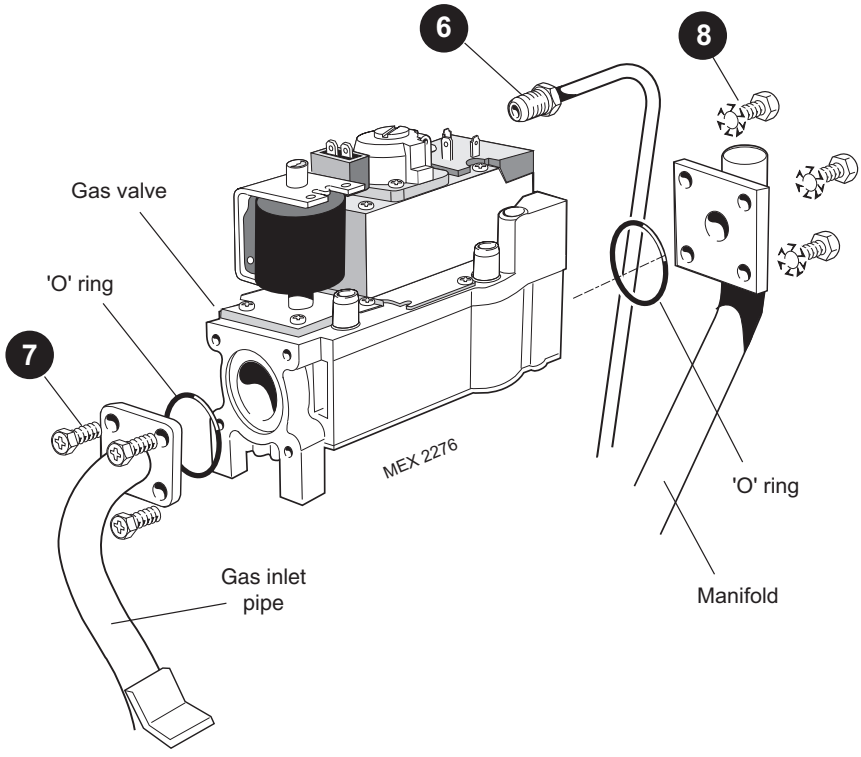

46 PRINTED CIRCUIT BOARD (PCB) REPLACEMENT

1. Refer to Frame 37.
2. Remove the 2 screws and lift off the lower front panel. Refer to Frame 30.
3. Undo the PCB cover fixing screws and remove the cover.
4. Remove the HT lead from the PCB
5. Remove the 6 push-in connectors from the PCB.
6. Compress the barbs on the PCB stand-offs to release the PCB from the box
7. Fit the new PCB and reassemble in reverse order.
8. Refit the boiler casing.
9. Check the operation of the boiler.

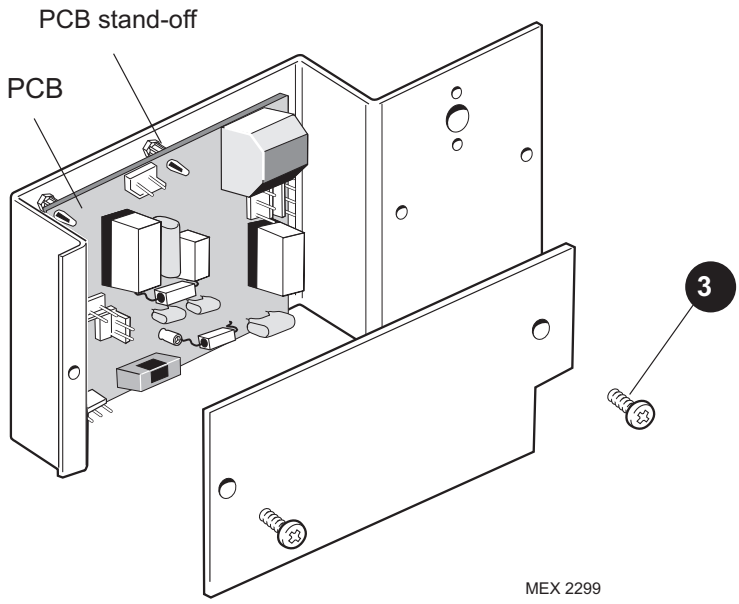

SHORT LIST OF PARTS

The following are parts commonly required as replacement components, due to damage or expendability. Their failure or absence is likely to affect safety or performance of this appliance.

The list is extracted from the British Gas List of Parts, which contains all available spare parts.

The full list is held by British Gas, **Caradon Ideal Limited** distributors and merchants.

When ordering spares please quote:

1. Boiler model
2. Appliance G.C. number
3. Description
4. Quantity
5. Product no.

When replacing any parts on this appliance use only spare parts that you can be assured conform to the safety and performance specification that we require. Do not use reconditioned or copy parts that have not been clearly authorised by Ideal Boilers.

Key No.	G.C. Part No.	Description	Qty.	Product No.
17	319 494	Sightglass assembly	1	079 334
20	398 252	Main burner	1	012 532
21	398 051	Main burner injector	1	002 608
22		Pilot burner injector:	1	004 982
23		Pilot burner with injector Key No. 22	1	172 010
24		Gas valve assy.	1	170 664
26	388 396	Ignition electrode	1	003 038
27	E01 412	HT lead 750mm long	1	057 599
30		PCB sub assy.	1	170 665
49		Flue baffle	1	172 011
66		Thermostat	1	151 903
67	308 557	Thermostat knob	1	111 904

47 SHORT PARTS

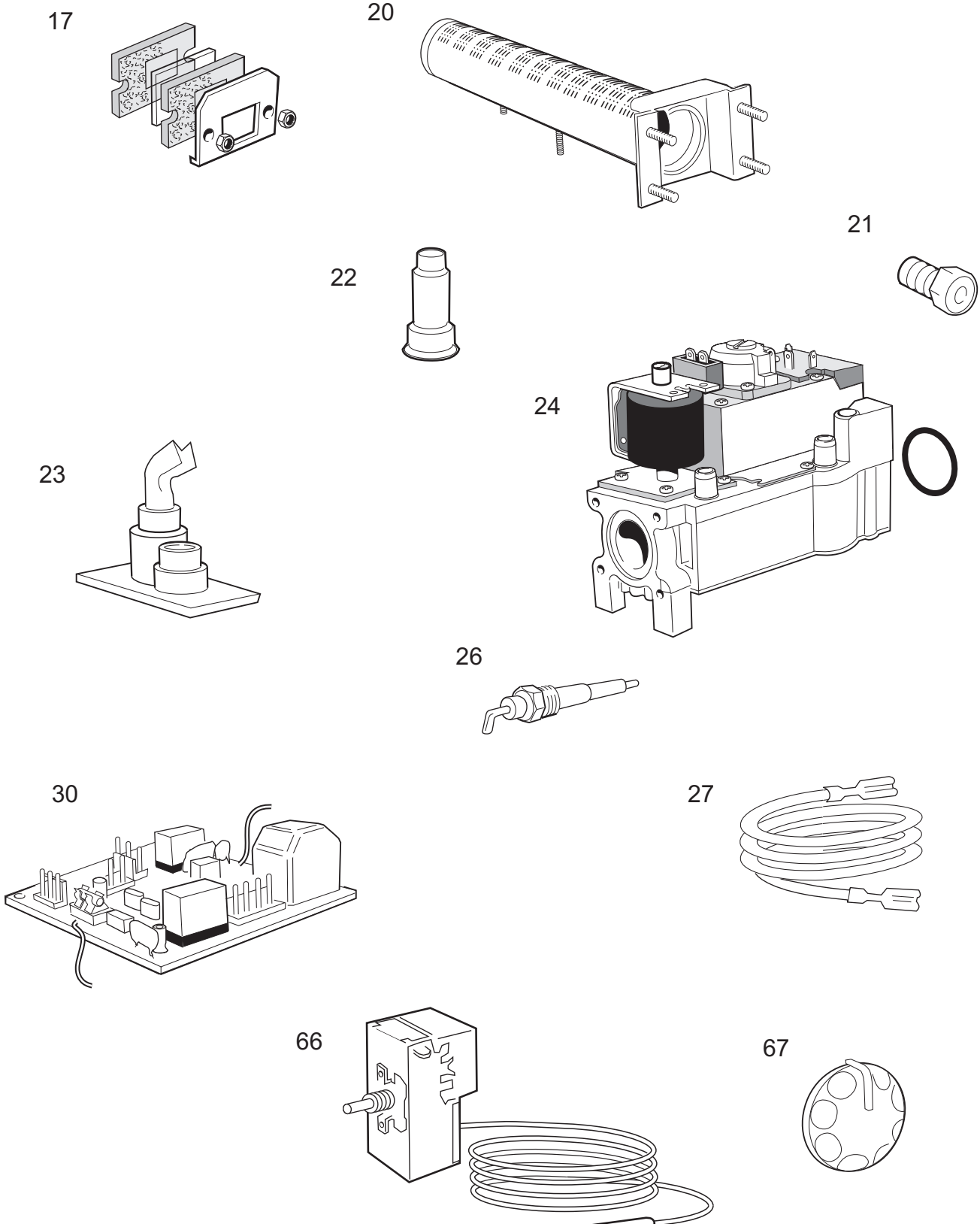

48 BOILER CASING ASSEMBLY

Legend

62. Casing complete.

63. Controls panel complete.

73. LH side panel.

74. RH side panel.

75. Lower front panel.

76. Top panel.

77. Grille assembly

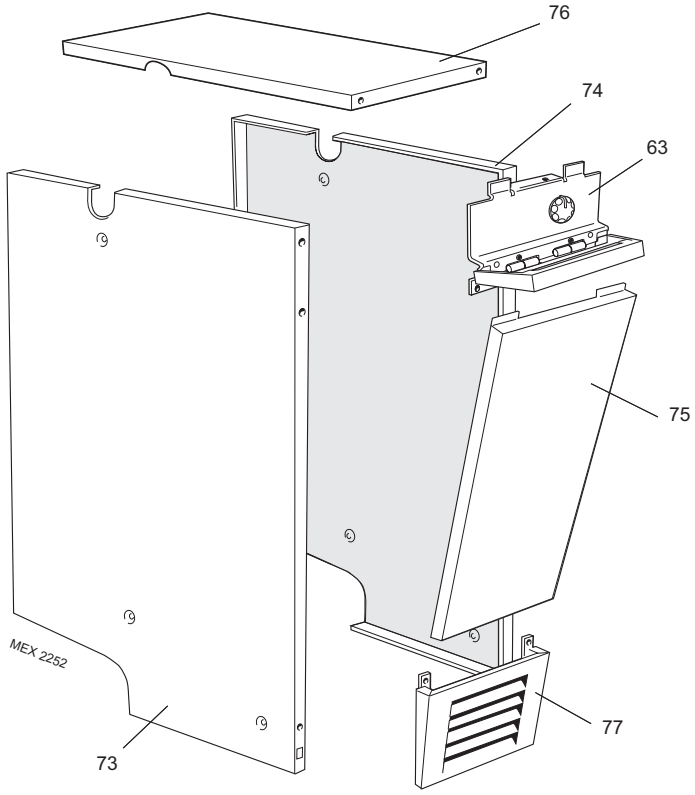

49 CONTROL BOX ASSEMBLY - Exploded View

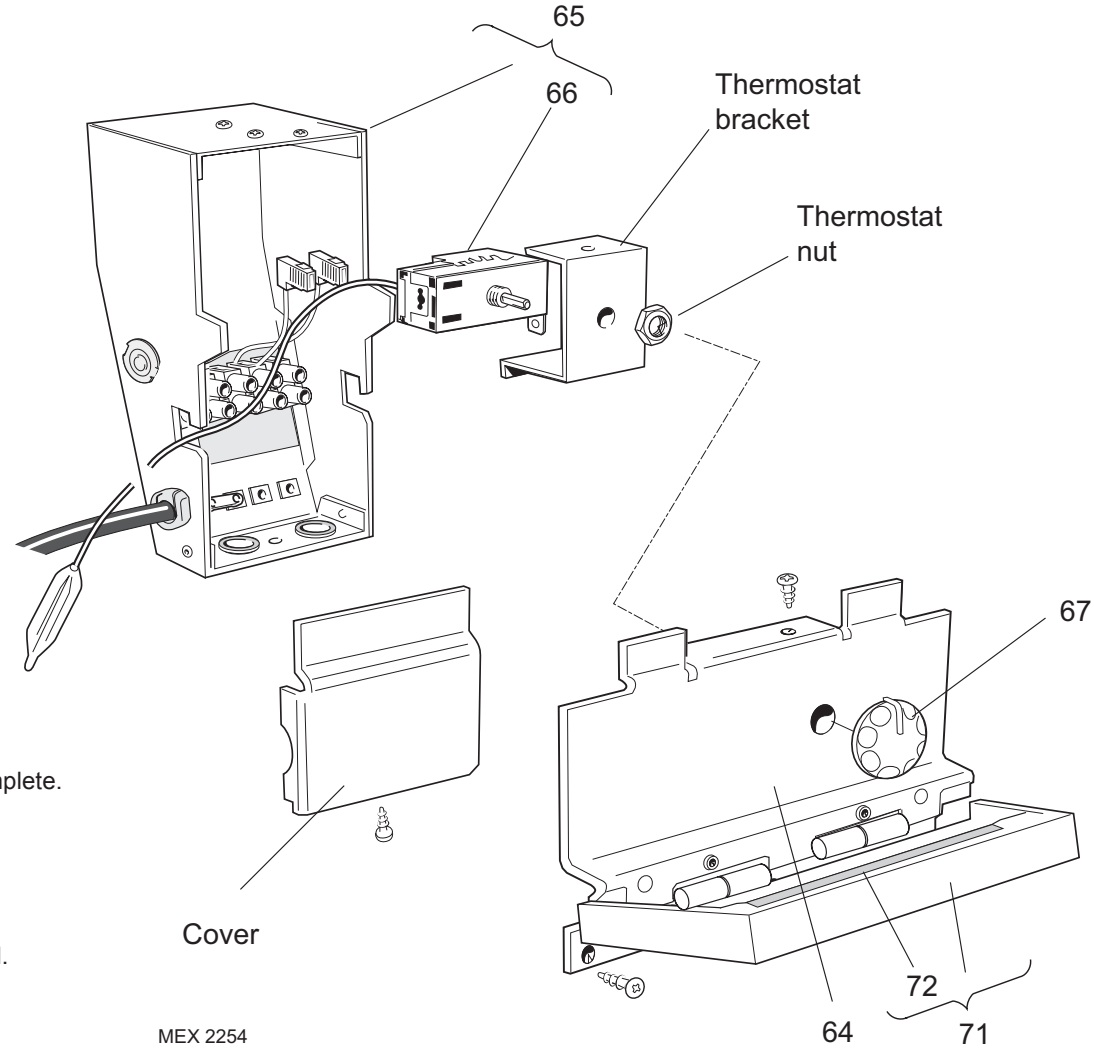

Legend

63. Control panel complete.

65. Control box assy.

66. Thermostat.

67. Thermostat knob

71. Control front panel.

72. Magnetic strip.

50 BURNER AND CONTROLS ASSEMBLY - Exploded View

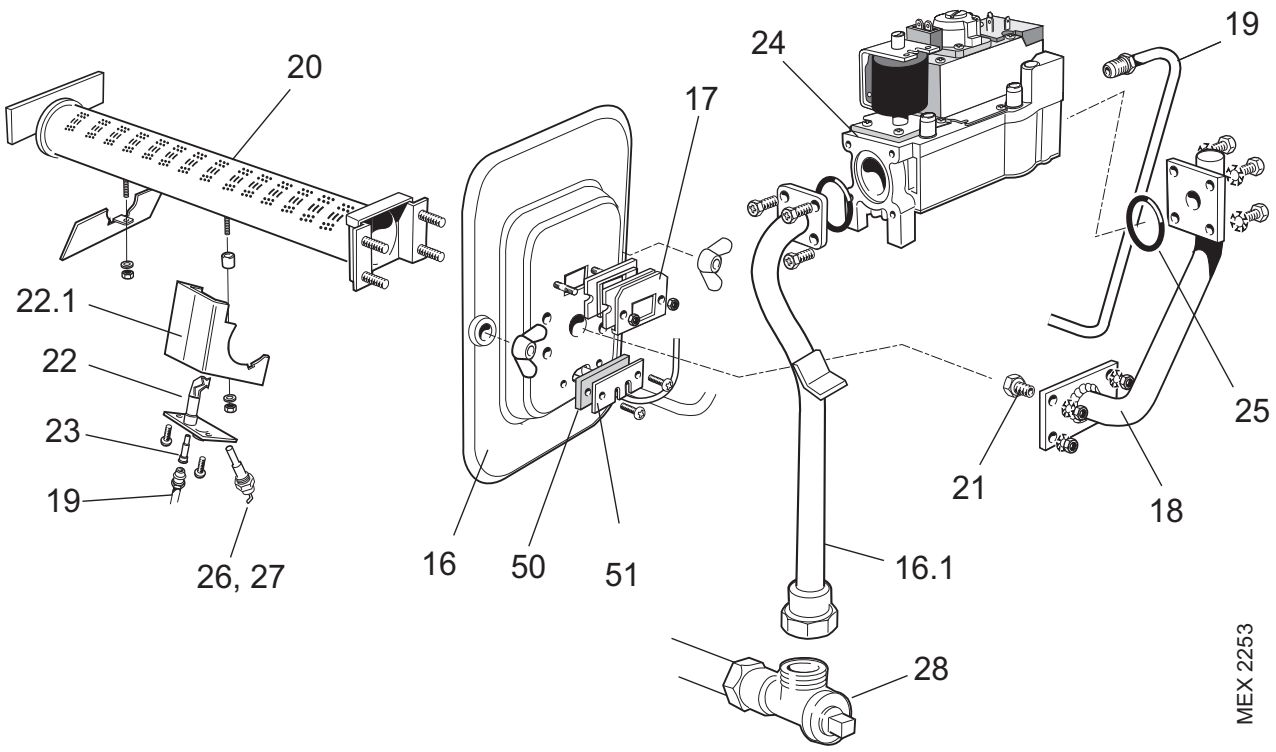

Legend

16. Front plate assembly.
17. Sightglass
18. Burner manifold
19. Pilot pipe
20. Main burner.
21. Main burner injector.
22. Pilot burner.
22.1. Pilot burner bracket
24. Gas valve.
25. 'O' ring.
26. Ignition electrode.
27. Ignition (HT) lead.
28. Gas cock.
50. Pilot sealing gasket.
51. Pilot sealing plate.

51 PCB BOX - Exploded View

Legend

29. PCB chassis assy
30. PCB sub assy.
34. PCB support
37. PCB cover

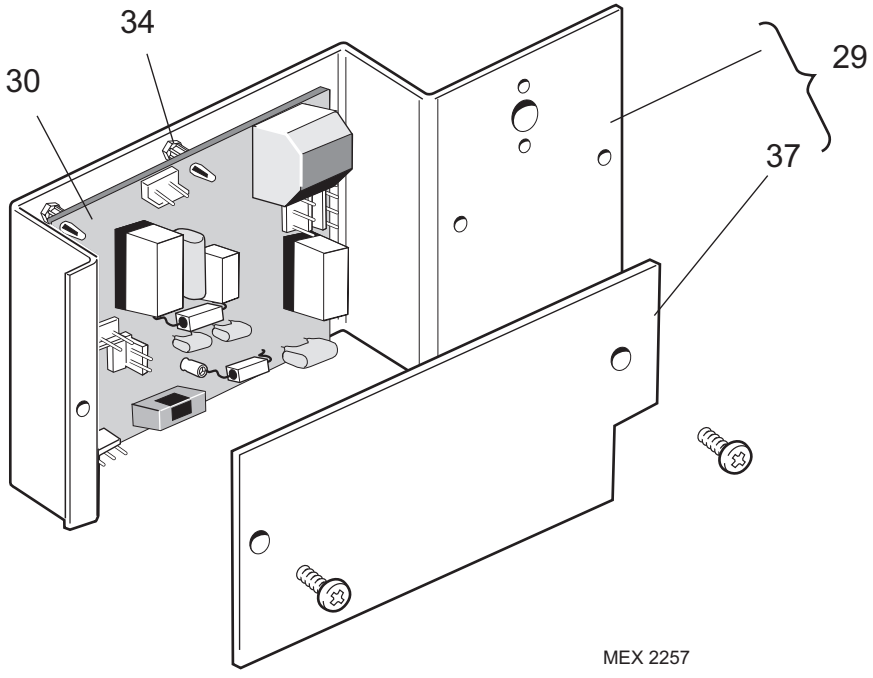

FAULT FINDING

Before attempting any electrical fault finding ALWAYS carry out preliminary electrical system checks, i.e. earth continuity, polarity and resistance to earth using a suitable meter.

Detailed instructions on the cleaning and adjustment or replacement of faulty components are contained in the 'Servicing' section of this publication.

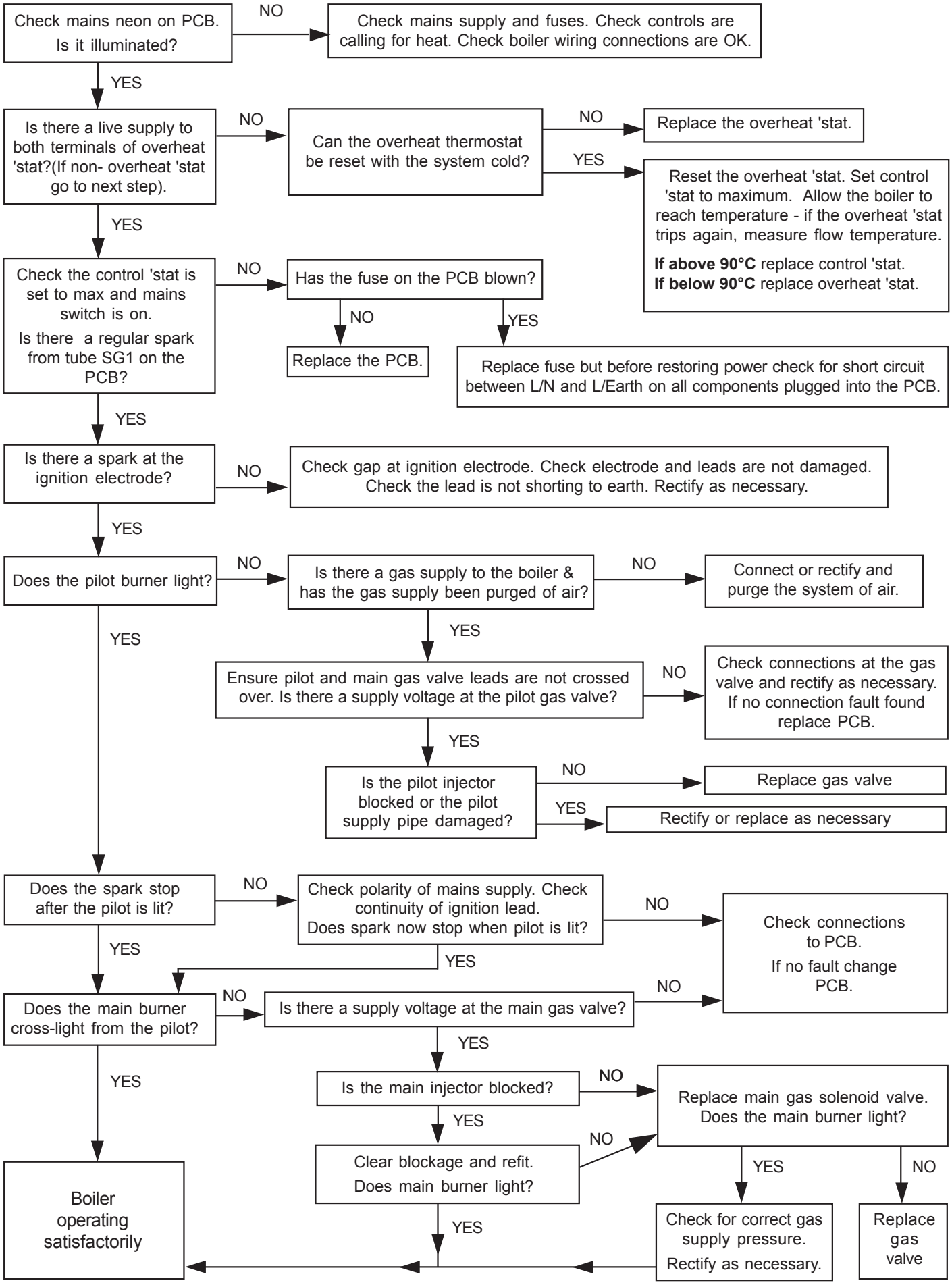

benchmark™

The code of practice for the installation, commissioning & servicing of central heating systems

THIS SYMBOL IS YOUR ASSURANCE OF QUALITY

These appliances are designed for use with Natural Gas only. They have been tested and conform with the provisions of BS. 6332 and BS. 5258.

Technical Training

The Ideal Boilers Technical Training Centre offers a series of first class training courses for domestic, commercial and industrial heating installers, engineers and system specifiers.
For details of courses please ring: 01482 498432

CERTIFIED PRODUCT
Manufactured under a BS EN ISO 9001: 2000 Quality System accepted by BSI

Ideal Boilers, P.O. Box 103, National Ave, Kingston upon Hull, HU5 4JN. Telephone: 01482 492 251 Fax: 01482 448 858. Registration No. London 322 137.

Caradon Ideal Limited pursues a policy of continuing improvement in the design and performance of its products. The right is therefore reserved to vary specification without notice.

Caradon
Ideal Limited

Ideal Installer/Technical Helpline: 01482 498663
www.idealboilers.com