THE IDEAL INSTALLATION & SERVICING MANUAL

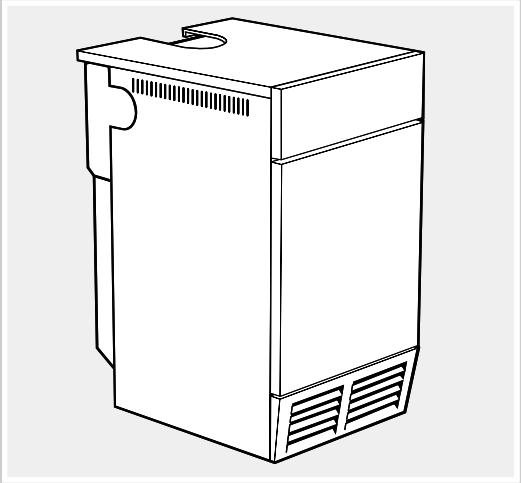

mexico

the floor standing boiler

Floor standing,
gas fired, fanned flue,
boiler

Mexico Super
40 FF - 80 FF

Ideal BOILERS

Installers guide to domestic central heating boilers

Mexico:

The Floor Standing Gas Boiler

The Ideal Mexico is a range of cast iron floor standing gas central heating boilers. Balanced, conventional or fanned flue versions are available. A complete range of both natural gas and propane models. The range offers Super models and, for when space is tight, there are Slimline models available.

Mexico: Britain's biggest selling floor standing boiler

The ideal replacement boiler...

Easy to install, easy to operate and easy to service. The Ideal Mexico really is the ultimate replacement floor standing range - you can depend on it.

Proven reliability...

Proven cast iron heat exchanger engineered and refined to be the most dependable floor standing boiler ensuring totally calm operation and quiet running, whatever the system demands.

Complete range...

34 models, including 4 Slimline models at only 250mm wide, 8 propane Super models and 7 Fanned models. Option kit availability includes an easy to use programmer kit available on all models, an overheat thermostat kit for all models and a pump kit that can be housed within the casing, available for all models except the Super CF 3/140 & CF 3/140P and all fanned models.

Full system suitability...

All models are suitable for connection to pumped open vent central heating systems, pumped central heating combined with pumped or gravity indirect domestic hot water supply systems. They can also be used on sealed water systems when used in conjunction with the optional Overheat Thermostat Kit.

Free Guarantee: 1st Year Ideal Care

The home owner is entitled to 12 months free Ideal Care, which includes both parts and labour, to restore the boiler to full function. Please encourage the home owner to complete and return the registration form in their Householder's pack within 30 days of installation.

Optional Extra Year Cover with Ideal Care

You may wish to offer your own annual service plan or you may wish to advise the home owner to complete their application form for the appropriate level of extended Ideal Care - Silver, Gold or Platinum. Full details are available in the Ideal Care brochure.

CAUTION. To avoid the possibility of injury during the installation, servicing or cleaning of this appliance, care should be taken when handling edges of sheet steel components.

GENERAL

Table 1 - General Data

Boiler Size			40 FF	50 FF	60 FF	70 FF	80 FF
Gas Supply Connection		in. BSP	Rc 1/2 (1/2)				
Number of Boiler Sections			2	3	3	3	3
Flow and Return Connections			Rc 1 (1" BSP)				
MAXIMUM Static Water Head		m (ft.)	30.5 (100) (3 bar)				
MINIMUM Static Water Head		m (ft.)	1.0 (3.3)				
Electrical Supply (Power Consumption)			230 V ~50 Hz (100 W)				
Fuse Rating			External: 3 A Internal: 1A to BS4265				
Water Content		litre (gal.)	5.0 (1.1)	7.4 (1.6)			
Dry Weight		kg. (lb.)	68 (150)	90 (198)			
Boiler Size	Height	mm (in.)	850 (33.5)				
	Width	mm (in.)	440 (17.4)				
	Depth	mm (in.)	533 (21.0)				
Gas Type			Natural 2 H				
Gas Supply Pressure			20 mb				
Flue duct diameter		mm (in.)	100 (4.0)				
Flue duct length (max)		m (ft)	3 (9.8)				

Table 2 - Performance Data

Boiler Size			40 FF	50 FF	60 FF	70 FF	80 FF
Boiler Input							
	MINIMUM	kW (Btu/h)	11.1 (37 700)	14.7 (50 300)	18.4 (62 900)	22.1 (75 500)	25.8 (88 100)
	Gas Consumption	l/s (ft.³/h)	0.29 (36.4)	0.38 (48.5)	0.48 (60.6)	0.57 (72.7)	0.67 (84.8)
	MID	kW (Btu/h)	12.9 (43 900)	16.5 (56 500)	20.2 (69 000)	23.9 (81 600)	27.6 (94 100)
	Gas Consumption	l/s (ft.³/h)	0.33 (42.3)	0.43 (54.4)	0.52 (66.5)	0.62 (78.6)	0.71 (90.7)
	MAXIMUM	kW (Btu/h)	14.7 (50 000)	18.3 (62 500)	22.0 (75 000)	25.6 (87 500)	29.3 (100 000)
	Gas Consumption	l/s (ft.³/h)	0.38 (48.2)	0.47 (60.2)	0.57 (72.3)	0.66 (84.3)	0.76 (96.3)
Boiler Output to Water							
	MINIMUM	kW (Btu/h)	8.8 (30 000)	11.7 (40 000)	14.7 (50 000)	17.6 (60 000)	20.5 (70 000)
	MID	kW (Btu/h)	10.3 (35 000)	13.2 (45 000)	16.1 (55 000)	19.1 (65 000)	22.0 (75 000)
	MAXIMUM	kW (Btu/h)	11.7 (40 000)	14.7 (50 000)	17.6 (60 000)	20.5 (70 000)	23.4 (80 000)
Burner Setting Pressure (hot)							
	MINIMUM	mbar (in w.g.)	5.8 (2.3)	7.4 (3.0)	8.5 (3.4)	8.0 (3.2)	10.7 (4.3)
	MID	mbar (in w.g.)	7.8 (3.1)	9.4 (3.8)	10.5 (4.2)	9.3 (3.7)	12.2 (4.9)
	MAXIMUM	mbar (in w.g.)	10.4 (4.2)	11.6 (4.7)	12.6 (5.1)	10.9 (4.4)	14.0 (5.6)
Seasonal Efficiency (SEDBUK)*			[76.8]%	[76.3]%	[77.1]%	[77.3]%	[79.0]%

***** The value is used in the UK Government's Standard Assessment Procedure (SAP) for energy rating of dwellings.
The test data from which it has been calculated have been certified by BG plc 0087.

Note.
Gas consumption is calculated using a calorific value of 38.7 MJ/m³ (1038 Btu/ft³) gross or 34.9 MJ/m³ (935 Btu/ft³) nett. To obtain the gas consumption at a different calorific value:-

a. *For l/s - divide the gross heat input (kW) by the gross C.V. of the gas (MJ/m³)*

b. *For ft³/h - divide the gross heat input (Btu/h) by the gross C.V. of the gas (Btu/ft³)*

c. *The appliance is preset at the factory to the highest nominal rating.*

Key to symbols

GB = United Kingdom **IE** = Ireland (Countries of destination)

PMS = Maximum operating pressure of water

C_{12} = A room sealed appliance designed for connection via ducts to a horizontal terminal, which admits fresh air to the burner and discharges the products of combustion to the outside through orifices which, in this case, are concentric. The fan is down stream of the combustion chamber.

I_{2H} = An appliance designed for use on 2nd Family gas, Group H only.

CONTENTS

Air Supply 7

Boiler Assembly - Exploded view 9

Boiler Clearances 6

Burner Assembly - Exploded view 43

Electrical Connections 24

Electrical Diagram 24

Electrical Supply 8

Extension Ducts - Fitting 21

Fault Finding 38

Flue Fitting 12-21

Flue Installation 7

Gas Safety Regulations 5

Gas Supply 7

Initial Lighting 28

Installation 9

Mandatory Requirements 5

Pump 23

Servicing 30

Short List of Parts 39

System Diagrams (Electrical) 26

Terminal Guards 7

Water Connections ..... 5 & 22

Water Systems 23

Water Treatment 8

Mexico Super FF

Mexico Super	40 FF	G.C. No. 41 349 78
Mexico Super	50 FF	G.C. No. 41 349 79
Mexico Super	60 FF	G.C. No. 41 349 80
Mexico Super	70 FF	G.C. No. 41 349 81
Mexico Super	80 FF	G.C. No. 41 349 82

Natural Gas only Appliance type: C_{12}

Certified - P.I. No. 87 AU 83

Destination Countries: GB & IE.

INTRODUCTION

Mexico Super FF above range is of floor standing, fanned flue gas boilers. They are range-rated to provide central heating outputs of 8.8 kW (30,000 Btu/h) to 23.4 kW (80,000 Btu/h).

The boiler has a cast iron heat exchanger and is supplied fully assembled, complete with a white enamelled mild steel casing.

A door at the top of the casing front panel hinges down, revealing the boiler thermostat control (and programmer, if fitted).

The boilers are suitable, as standard, for connection to open-vented systems ONLY - an overheat thermostat kit is available to allow the boiler to be used on sealed water systems.

The systems may be:

- pumped or gravity circulating indirect DHW only
- pumped central heating only
- pumped central heating combined with either a pumped or gravity circulating indirect DHW circuit.

OPTIONAL EXTRA KITS

Extension Duct Kit	Pack D.
Programmer Kit	Fits neatly within the casing. Separate fitting instructions are included with this kit.
Overheat Thermostat Kit	is available to allow the boiler to be used on sealed water systems.
Flue Elbow Kits	90 degree pack 45 degree pack

NOTE TO THE INSTALLER: LEAVE THESE INSTRUCTIONS ADJACENT TO THE GAS METER. ALSO COMPLETE THE BENCHMARK LOG BOOK AND GIVE THIS TO THE CUSTOMER.

benchmark™

GAS SAFETY

Gas Safety (Installation and Use) Regulations, 1994, Amendments 1996 or the rules in force.

It is law that *all* gas appliances are installed by a CORGI registered installer (identified by ❀) in accordance with the above regulations. Failure to install appliances correctly could lead to prosecution. It is in your own interest, and that of safety, to ensure the law is complied with.

The installation of the boiler MUST also be in accordance with the latest I.E.E (BS 7671) Wiring Regulations, local building regulations, bylaws of the local water authority, the Building Regulations and Building Standards (Scotland) and any relevant requirements of the local authority.

Detailed recommendations are contained in the following British Standard Codes of Practice:

BS. 6891	Low pressure installation pipes.
BS. 6798	Installation of gas fired hot water boilers of rated input not exceeding 60 kW.
BS. 5449:1	Forced circulation hot water systems (small bore and microbore domestic central heating systems).
BS. 5546	Installation of gas hot water supplies for domestic purposes (2nd Family Gases).
BS. 5440: 1	Flues for gas appliances of rated input not exceeding 60 kW.
BS. 5440: 2	Ventilation for gas appliances of rated input not exceeding 60 kW.
BS 7593	Treatment of water in Domestic Hot Water Central Heating Systems.

Health and Safety Document No. 635.

The Electricity at Work Regulations, 1989.

Manufacturer's notes must NOT be taken in any way as overriding statutory obligations.

IMPORTANT. These appliances are certificated by the British Standards Institution for safety and performance. It is important, therefore, that no external control devices, e.g. flue dampers, economisers etc., are directly connected to these appliances unless covered by these Installation and Servicing Instructions or otherwise recommended by **Caradon Plumbing Limited** in writing. If in doubt please enquire.

Any direct connection of a control device not approved by **Caradon Plumbing Limited** could invalidate the BSI Certification and the normal appliance warranty. It could also infringe the Gas Safety Regulations and the above regulations or other statutory requirements.

LOCATION OF BOILER

The boiler must be installed on a flat and level floor, capable of adequately supporting the weight of the boiler and any ancillary equipment.

The boiler may be fitted on a combustible floor.

Insulation is not necessary, unless required by the local authority.

The boiler must not be fitted outside.

Timber Framed Buildings
If the boiler is to be fitted in a timber framed building it should be fitted in accordance with the Institute of Gas Engineers document IGE/UP/7 : 1998.

1 BOILER WATER CONNECTIONS

1. This appliance is NOT suitable for use in a direct hot water system.
2. If the boiler is to be used on a sealed system, an **Overheat Thermostat Kit** is available and must be installed in accordance with the instructions supplied with the kit.

Boiler	Dimension A
40 FF	152mm (6")
50 FF / 60 FF	226mm (8 7/8")
70 FF / 80 FF	226mm (8 7/8")

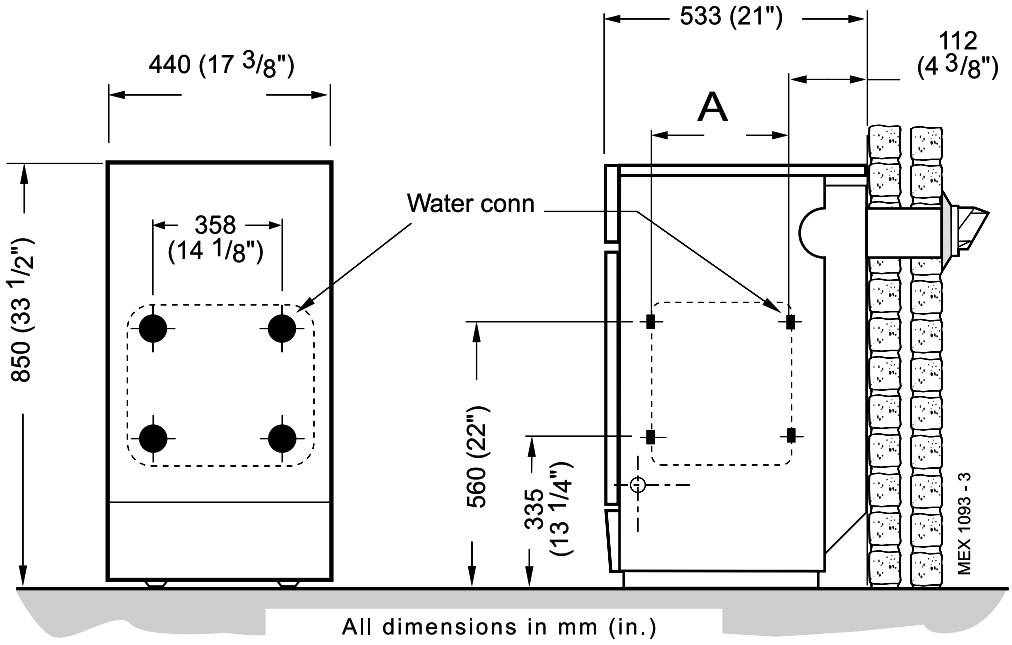

Bathrooms
The boiler may be installed in any room or internal space, although particular attention is drawn to the requirements of the current I.E.E. (BS 7671) Wiring Regulations and, in Scotland, the electrical provisions of the building regulations applicable in Scotland with respect to the installation of the boiler in a room or internal space containing a bath or shower.

Where a room-sealed appliance is installed in a room containing a bath or shower then the appliance and any electrical switch or appliance control utilising mains electricity should be so situated that it cannot be touched by a person using the bath or shower.

Where installation will be in an unusual location, special procedures may be necessary and BS.6798 gives detailed guidance on this aspect.

Compartment Installations

A compartment used to enclose the boiler MUST be designed and constructed specially for this purpose.
An existing cupboard or compartment may be used, providing it is modified for the purpose.

In both cases details of essential features of cupboards/ compartment design, including airing cupboard installation, are to conform to the following:

- BS. 6798.
- The position selected for installation MUST allow adequate space for servicing in front of the boiler and for air circulation around the boiler.

  Side clearance is only necessary for installation. The amount of side clearance will depend upon the type of connection used.
- This position MUST also permit the provision of a satisfactory flue termination.
- For the minimum clearances required for safety, and subsequent service, see Frame 2.

2 FLOOR MOUNTING AND BOILER CLEARANCES

Flammable materials must not be placed in close proximity to the appliance. Materials giving off flammable vapours must not be stored in the same room as the appliance.

Floor mounting
1. The floor must be flat, level and of suitable load bearing capacity.
2. The back of the boiler may be fitted up to the wall.

Boiler clearances
The minimum overall dimensions of the space in which the boiler is to operate and to facilitate servicing are as shown in the Table.

Additional space will be required for installation, depending upon site conditions.

IMPORTANT.

In order to facilitate gas connection, a clearance of at least 100 mm (4") must be available at either the left hand side or the right hand side DURING installation. Refer to Frame 30.

In addition a MINIMUM clearance of 533 mm (21") MUST be available at the front of the boiler, for servicing.

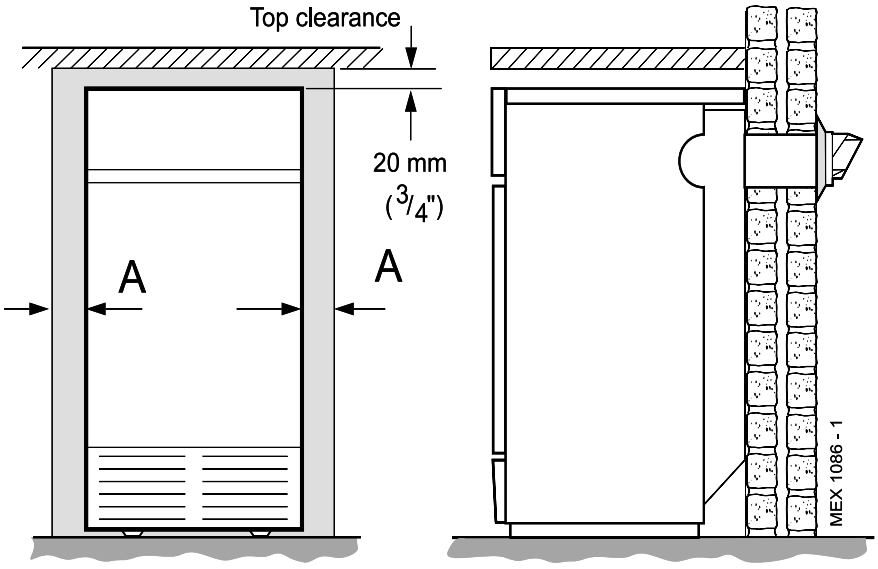

Front view Side view

Boiler Model	Flue Length	Overall Space dimension				Minimum Side Clearance 'A'	
		Depth	Height	Width Rear Flue	Width Side/Top	Rear Flue	Side/Top Flue
40 FF, 50 FF, 60 FF, 70 FF 80 FF	114 to 600 mm (4 1/2"-23 5/8")	533 mm (21")	870 mm (34 1/4")	460 mm (18 1/8")	510 mm (20 1/8")	10 mm (3/8")	35 mm (1 3/8")
40 FF, 50 FF, 60 FF, 70 FF 80 FF	600 to 3000mm (23 5/8"-118")	533 mm (21")	870 mm (34 1/4")	510 mm (20 1/8")	510 mm (20 1/8")	35 mm (1 3/8")	35 mm (1 3/8")

GAS SUPPLY

The local gas supplier should be consulted, at the installation planning stage, in order to establish the availability of an adequate supply of gas. An existing service pipe must NOT be used without prior consultation with the local gas supplier.

The boiler is to be installed only on a gas supply with a governed meter.

A gas meter can only be connected by the local gas supplier or by a local regional contractor.

Check that the appliance is suitable for the proposed gas supply. An existing meter should be checked, preferably by the gas supplier, to ensure that the meter is adequate to deal with the rate of gas supply required. A **minimum** gas pressure of 20 mbar MUST be available at the boiler inlet, with the boiler operating.

Installation pipes MUST be fitted in accordance with BS. 6891. Pipework from the meter to the boiler MUST be of an adequate size.

The complete installation MUST be tested for gas soundness and purged as described in the above code.

FLUE INSTALLATION

Some pluming may occur at the termination so terminal positions where this could cause a nuisance should be avoided.

The flue must be installed in accordance with the recommendations of BS. 5440:1.

The following notes are intended for general guidance:-

1. The boiler MUST be installed so that the terminal is exposed to external air.
2. It is important that the position of the terminal allows the free passage of air across it at all times.
3. Minimum acceptable spacing from the terminal to obstructions and ventilation openings are specified in Table 3.
4. Where the lowest part of the terminal is fitted less than 2m (6'6") above a balcony, above ground or above a flat roof to which people have access then the terminal MUST be protected by a purpose designed guard. The minimum spacing in Table 3, Nos. 2,3, 4, 5 and 6 would be 75mm in order to allow a terminal guard to be fitted.

   Terminals guards are available from boiler suppliers - ask for Tower Flue Guard, Model K1. In case of difficulty seek advice from:

   Tower Flue Components Ltd.,
   Vale Rise, Tonbridge, Kent TN9 1TB (Model K1)
   Telephone No. 01732 351 555

   Ensure that the guard is fitted centrally.
5. Where the terminal is fitted within 1000mm (39 1/2") of a plastic or painted gutter or 500mm (19 1/2") of painted eaves then an aluminium shield at least 1000mm (39 1/2") long should be fitted to the underside of the gutter or painted surface.
6. The air inlet/products outlet duct and the terminal of the boiler MUST NOT be closer than 25mm (1") to combustible material. Detailed recommendations on the protection of combustible material are given in BS.5440: 1990.
7. Where it is essential that the terminal wall plate is fitted, i.e. wall thicknesses over 600mm (23 1/2") or with an inaccurately cut hole, the minimum spacing in Table 3 Nos. 2,3, 4, 5 and 6 would be 60mm (2 1/2") in order to allow the terminal wall plate to be fitted.

IMPORTANT.
It is absolutely ESSENTIAL to ensure, in practice, that products of combustion discharging from the terminal cannot re-enter the building or any other adjacent building through ventilators, windows, doors, other sources of natural air infiltration or forced ventilation/air conditioning. If this should occur, the appliance MUST be turned OFF, labelled 'unsafe' and corrective action taken.

Table 3 - Balanced flue terminal position

Terminal Position	Minimum Spacing
1. Directly below or alongside an opening window, air vent or other ventilation opening	300 mm (12")
2. Below guttering, drain pipes or soil pipes	25 mm (1")
3. Below eaves	25 mm (1")
4. Below balconies or a car port roof	25 mm (1")
5. From vertical drain pipes or soil pipes	25 mm (1")
6. From internal or external corners	25 mm (1")
7. Above adjacent ground, roof or balcony level	300 mm (12")
8. From a surface facing the terminal	600 mm (24")
9. From a terminal facing a terminal	1200 mm (48")
10. From an opening in a car port (e.g. door or window) into dwelling	1200 mm (48")
11. Vertically from a terminal on the same wall	1500 mm (60")
12. Horizontally from a terminal on the wall	300 mm (12")

TERMINAL

The terminal assembly can be adapted to accommodate various wall thicknesses. Refer to Frames 7 and 27.

AIR SUPPLY

Detailed recommendations for air supply are given in BS.5440:2. The following notes are for general guidance:

1. It is NOT necessary to have a purpose provided air vent in the room or internal space in which the boiler is installed.
2. If the boiler is to be installed in a cupboard or compartment, permanent air vents are required (for cooling purposes) in the cupboard/compartment, at both high and low levels. The air vents must either communicate with room/internal space, or be direct to outside air. The minimum effective areas of the permanent air vents, required in the cupboard/ compartment, are specified as follows and are related to maximum rated heat input.
3. Both air vents MUST communicate with the same room or internal space or MUST be on the same wall to outside air.
4. In siting the air vents care must be taken to avoid the freezing of pipework.

Table 4 - High and low vent areas

Boiler	Air from room/internal space cm² (in.²)		Air direct from outside cm² (in.²)	
	High level	Low level	High level	Low level
40 FF	143 (23)	143 (23)	72 (12)	72 (12)
50 FF	173 (27)	173 (27)	87 (14)	87 (14)
60 FF	208 (33)	208 (33)	104 (17)	104 (17)
70 FF	245 (38)	245 (38)	123 (19)	123 (19)
80 FF	282 (44)	282 (44)	141 (22)	141 (22)

WATER CIRCULATION SYSTEM

The boiler must NOT be used for direct hot water supply or for sealed systems. The boiler is suitable for connection to pumped open vent central heating systems, pumped central heating combined with pumped or gravity indirect domestic hot water supply systems.

The boiler is NOT suitable for gravity heating systems. The hydraulic resistances of the boilers at *maximum output* with 11 °C (20 °F) temperature differentials are shown in the graph below.

The central heating system should be in accordance with BS. 6798 and, in addition, for smallbore and microbore systems, BS. 5449:1.

The domestic hot water system, if applicable, should be in accordance with the relevant recommendations of BS. 5546.

Copper tubing to BS. 2871:1 is recommended for water carrying pipework.

The hot water storage cylinder MUST be of the indirect type and should preferably be manufactured of copper.

Single feed, indirect cylinders are not recommended and MUST NOT be used on sealed systems.

The hot water cylinder and ancillary pipework not forming part of the useful heating surface should be lagged to prevent heat loss and any possible freezing - particularly where pipes run through roof spaces and ventilated underfloor spaces.

IMPORTANT.

The boiler must be vented. If venting cannot be done via a flow connection a separate vent MUST be fitted by the installer.

Draining taps MUST be located in accessible positions, which permit the draining of the whole system - including the boiler and hot water storage vessel. They should be at least 1/2" BSP nominal size and be in accordance with BS. 2879.

If required, a drain tap (not supplied) may be fitted to an unused bottom (1" BSP) tapping on the front of the boiler.

Water Flow Rate and Pressure Loss

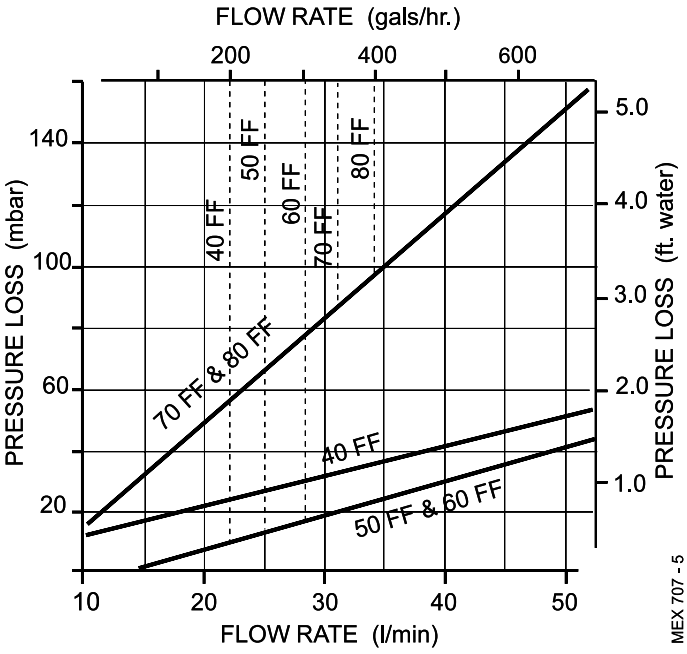

Dotted lines indicate flow rates equivalent to a temperature rise of 11 °C (20 °F)

WATER TREATMENT

The Mexico Super FF incorporates a cast iron heat exchanger. As part of the installation the central heating system should be thoroughly flushed with appropriate water treatment in order to comply with BS7593:1992

Caradon Plumbing Limited recommend the use of Fernox or Betz Dearborn water treatment products which must be used in accordance with the manufacturers instructions. For further information contact :-

Fernox Manufacturing. Co. Ltd., Tandem House, Marlowe Way, Croydon, Surrey CRO 4XS, tel 0870 5601 5000

or

Betz Dearborn Ltd., Widnes, Cheshire, tel. 0151 424 5351

IMPORTANT.
ANY OTHER TREATMENT FOR THIS PRODUCT WILL RENDER THE GUARANTEE OF CARADON PLUMBING LIMITED **INVALID.**

Notes.

1. If an inhibitor is used, and in hard water areas where treatment to prevent lime deposits is necessary, it is most important that the water treatment MUST be maintained at the correct concentrations recommended by the treatment manufacturer.

2. Artificially softened water must not be used in the system, under any circumstances.

THERMOSTATIC RADIATOR VALVES

Caradon Plumbing Limited recommend that heating systems utilising full thermostatic radiator valve control of temperature in individual rooms should also be fitted with a room thermostat controlling the temperature in a space served by radiators not fitted with such a valve, as stated in BS. 5449.

When thermostatic radiator valves are used, the space heating temperature control over a living / dining area or hallway having a heating requirement of at least 10% of the boiler heat output should be achieved using a room thermostat, whilst other rooms are individually controlled by thermostatic radiator valves. However, if the system employs thermostatic radiator valves on all radiators or two port valves without end switches then a bypass must be fitted in order to ensure a flow of water should all the valves be in the closed position.

ELECTRICAL SUPPLY

WARNING. The appliance MUST be efficiently earthed.

Wiring external to the appliance MUST be in accordance with the current I.E.E. (BS 7671) Wiring Regulations and any local regulations which apply.

The boiler is supplied for 230 V ~ 50 Hz single phase. The fuse rating is 3A.

Connection must be made in a way that allows complete isolation of the electrical supply - such as a double pole switch, having a 3mm (1/8") contact separation in both poles, or a plug and socket serving only the boiler and system controls.

The means of isolation must be accessible to the user after installation.

For bathroom installations the point of connection to the mains must be situated outside the bathroom.

3 BOILER ASSEMBLY - Exploded View

Mexico Super FF with casing removed.

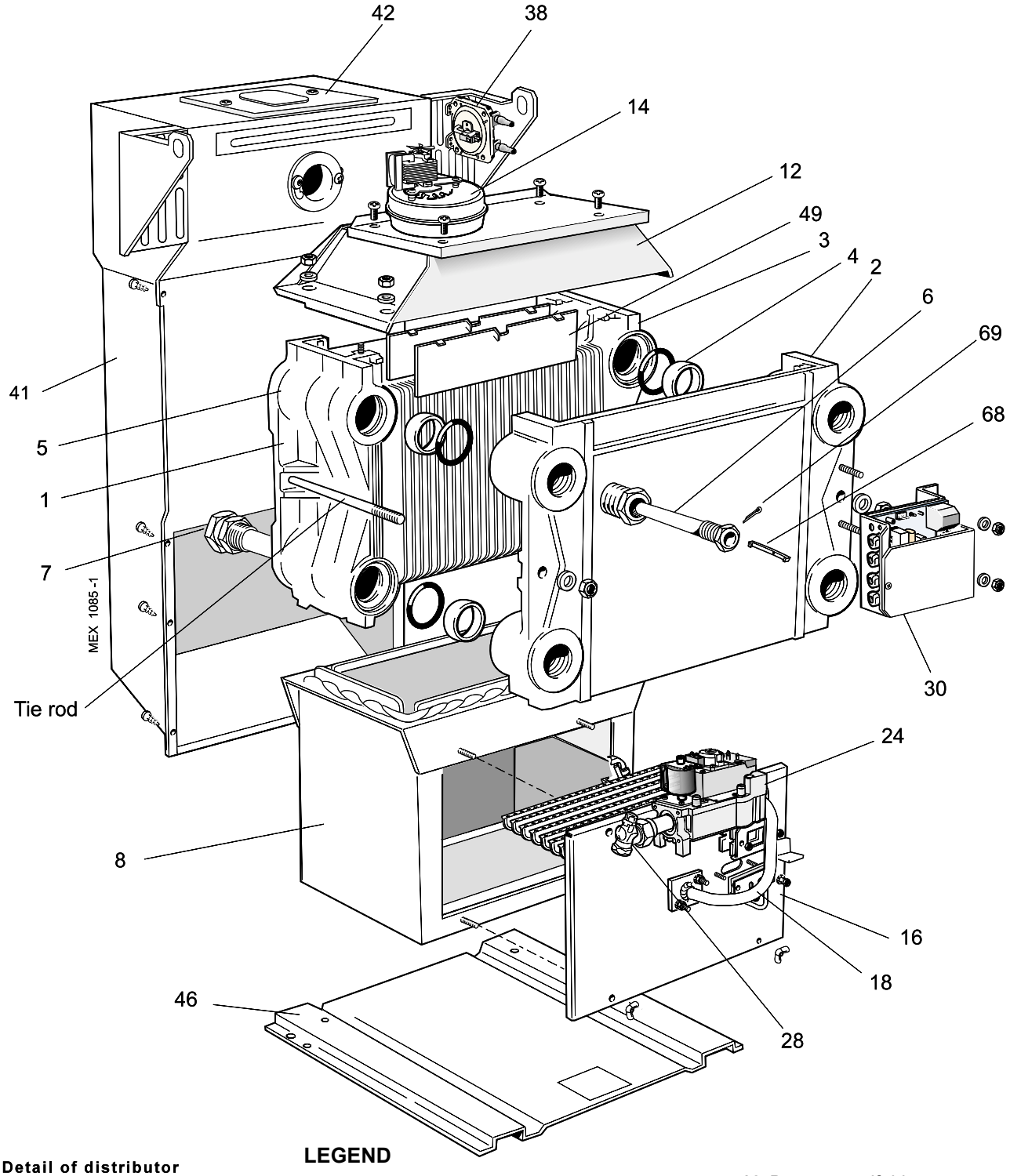

Detail of distributor tube alignment

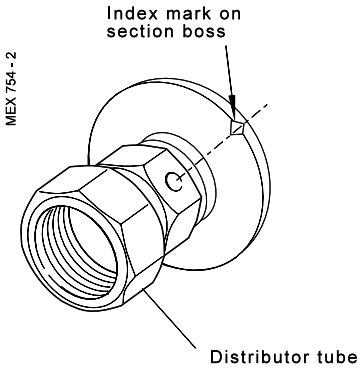

LEGEND

1. Heat exchanger assembly.
2. Front section.
3. Centre section.
4. Section alignment rings and 'O' rings.
5. Back section.
6. Thermostat pocket.
7. Distributor tube.
8. Combustion chamber.
12. Collector hood.
14. Fan assembly.
16. Front plate assy.
18. Burner manifold.
28. Gas cock.
30. PCB assembly.
38. Pressure switch.
41. Turret assembly.
42. Turret access cover assy.
46. Boiler base plate.
47. Baseplate heat shield.
49. Flue baffle.
68. Thermostat phial retaining clip
69. Phial split pin.

4 UNPACKING

The boiler is supplied fully assembled in Pack A, together with a standard flue assembly for lengths up to 600mm (23 1/2") rear or side flue outlet in Pack B.

Unpack and check the contents.

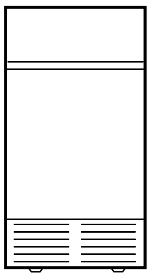

complete boiler assembly

PACK A CONTENTS

- complete boiler assembly
- User's Instructions
- these Installation and Servicing Instructions
- the Hardware Pack (listed separately below)
- Template

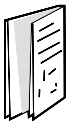

FLUE PACK. Pack B Contents

- Duct cutting support, 2 off (cardboard)
- Terminal wall plate, 1 off.
- Terminal grille assy., 1 off.
- Polyurethane foam seal 400 lg., 1 off.
- No. 8 x 8 lg. Pozi pan hd. screws, 3 off.

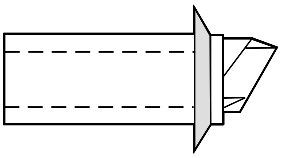

Flue terminal

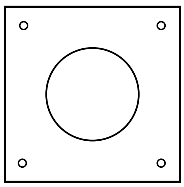

Terminal wall plate

BOILER HARDWARE PACK

- 1" BSP plugs - 5 off
- 1" x 1/2" BSP reducing bush - 1 off

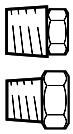

- Distributor tube

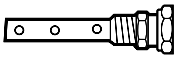

- Thermostat pocket -1 off
- Thermostat clip (RS 3/50, RS 3/60, RS 3/70 & RS 3/80 only) - 1 off
- Thermostat retaining pin - 1 off
- Output setting label -1 off

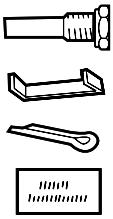

FLUE HARDWARE PACK

- Flue extension tube (rear)
- Flue extension tube (side)
- Flue extension tube (top)
- Elbow
- Sealing ring
- M5 wing nuts - 3 off
- Side outlet plate

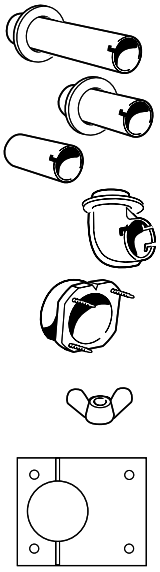

Side outlet plate

5 BOILER CASING REMOVAL

To install the boiler the casing MUST be removed.

1. Undo the 2 screws and lift off the lower front panel.
2. Remove 2 screws and lift off the grille assembly.
3. Disconnect the in-line electrical connector between the control box and the PCB box.
4. Remove the thermostat phial from the pocket as shown in Frame 6.
5. Remove the 2 screws securing the control panel and pull down to release the tabs from under the top panel.
6. Remove the 2 screws securing the top panel to the side.

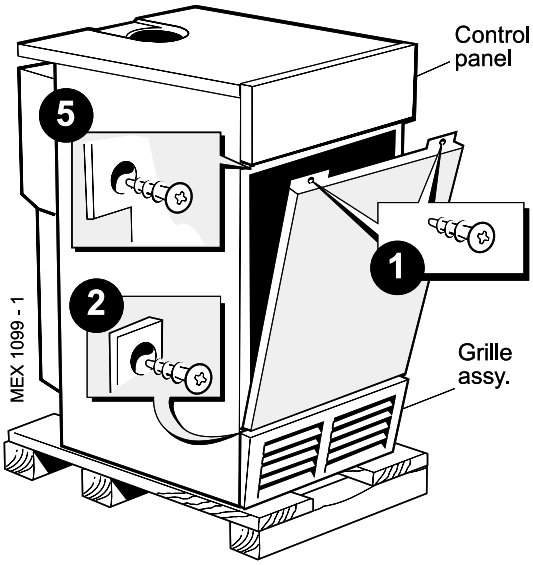

6 BOILER CASING REMOVAL - continued

7. Draw the top panel forward and lift it off the boiler.

8. Remove the 2 screws securing the LH side panel to the turret front panel and baseplate.

9. Pull the panel forward, disengaging from the collector hood tab, lifting it clear of the locating peg and remove.

10. Repeat steps 8 and 9 to remove the RH panel.

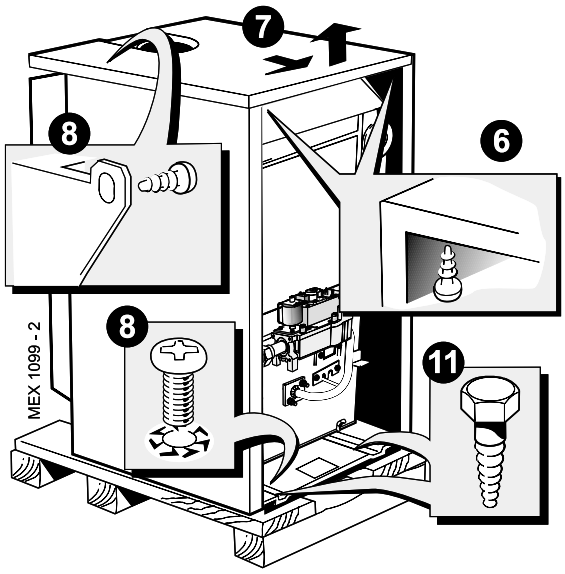

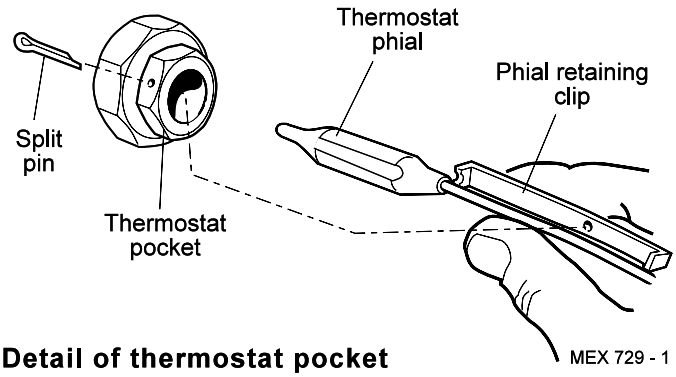

Detail of thermostat pocket

11. The boiler is held to the packaging base by 4 M6 hex head screws. Remove the front screws, slacken the rear screws and remove the boiler from the packaging base.

7 DETERMINING THE FLUE LENGTH

It is MOST IMPORTANT that the boiler is installed in a vertical position.

WARNING.
For top outlet installation the flue terminal MUST always be in the horizontal position.

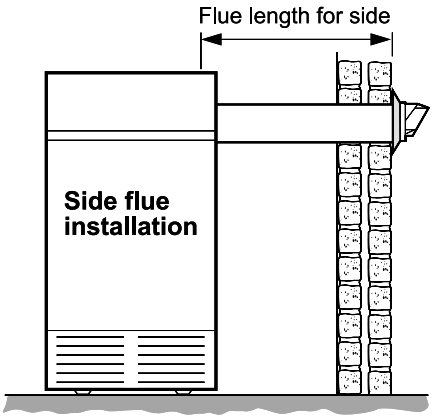

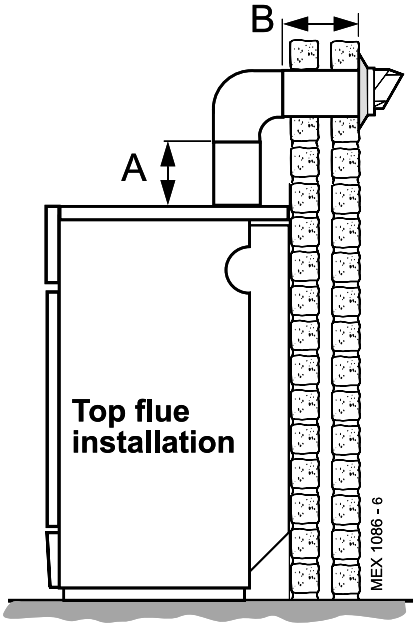

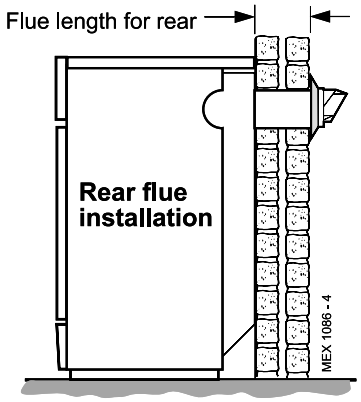

Top outlet flue length

= A + B + Elbow allowance

90° Elbow = 1m

45° Elbow = 0.7m

FLUE KITS

Pack B: supplied as standard.

Pack D: optional extension kit for side flue or rear flue outlet. Refer to 'Flue Extension Ducts'

1. A maximum of 3 extension ducts (plus the standard flue duct) may be used together.
2. Flue extensions of greater than 1m (39") should be supported with the bracket provided.

Flue length mm	Pack Requirement	Product No.
Up to 600	B, 1 off	152 227
600 to 1550	B, 1 off + D, 1 off	152227+152132
1550 to 2500	B, 1 off + D, 2 off	152 227+ 152132, 2 off
2500 to 3000	B, 1 off + D, 3 off	152 227+ 152132, 3 off

8 PREPARING THE BOILER

Table 7 - Fully Pumped Systems

Connections - as viewed at front		Thermostat Position
Back Section		Front Section
Flow	Return	Top
LH	LH	LH
LH	RH	LH
RH	RH	RH
RH	LH	RH

Table 8 - Gravity Domestic Hot Water and Pumped Central Heating

Connections - as viewed at front				Thermostat Position
Back Section				Front Section
CH		DHW		
Flow	Return	Flow	Return	Top
LH	LH	RH	RH	LH
LH	RH	RH	LH	LH
RH	RH	LH	LH	RH
RH	LH	LH	RH	RH

Notes.

- *Before placing the boiler in the selected position any gas and water connections at the rear of the boiler should be prepared, due to the possible lack of access.*
- *The pump may be fitted to the FLOW or the RETURN.*

1. Screw the distributor tube (supplied with a 1" BSP x 28mm copper adaptor) into the selected heating return tapping, using an appropriate jointing material.

   IMPORTANT. It is **IMPERATIVE** that the index mark on the distributor tube bush is in alignment with the mark on the section boss, as shown in Frame 3.

   DO NOT disturb it when connecting subsequent pipework.

   Fully pumped systems using more than 1 pump, serving separate zones, must have a common return connection to the distributor tube.

2. Select the desired pumped flow tapping.

3. Screw the supplied boiler thermostat pocket into the appropriate front section tapping, using an approved jointing material. Refer to Tables 7 and 8.

4. Connect pipe fittings to the rear tappings and plug any unused tappings.

Note. *If using iron elbows fit a short straight connector into the boiler tapping first, to clear the casing.*

9 REAR FLUE ASSEMBLY - Exploded view

1. The boiler turret assembly is factory built for rear flue installation.
2. Remove the turret access cover.
3. Fit the long flue extension tube (with ring) to the flue connector, rotate in the bayonet slot and secure with the M4 screws.

LEGEND

1. Terminal.
2. Weather seal.
3. Flue assembly.
4. Boiler sealing ring.
5. Flue extension tube (long, with ring).
6. Sealing plate.
7. Flue connector.
8. Turret access cover.

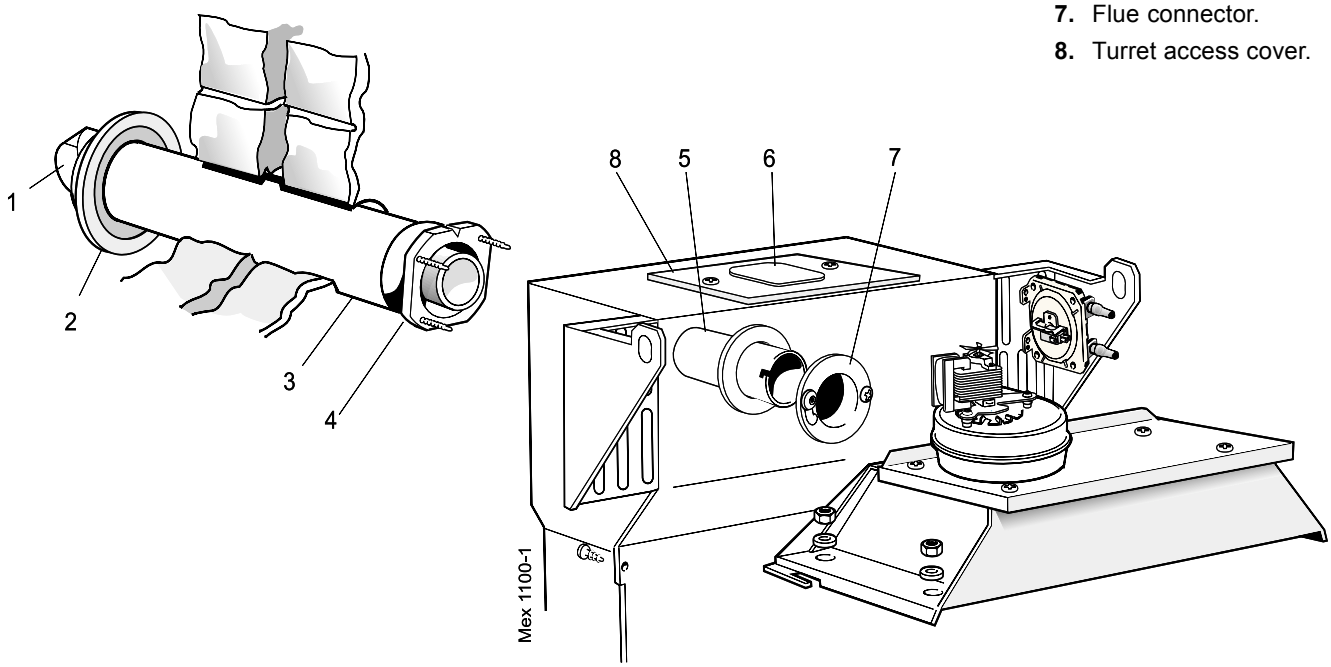

REAR FLUE OUTLET

10 PREPARING THE WALL

1. Tape the template into the selected position.
2. Mark onto the wall the position of the flue duct hole.

IMPORTANT. Ensure that, during the cutting operation, masonry falling outside of the building does not cause damage or personal injury.

3. Cut the flue hole, preferably with a 125mm (5") core boring tool, ensuring that the hole is square to the wall. If the hole has been quite accurately cut with a drill then making good the wall faces is not essential as seals are provided at both ends of the flue. However, both wall faces immediately around the cut hole should be flat; make good if necessary. For less accurate holes make good to approximately 125mm (5") diameter at the 2 wall faces.
4. Remove the template from the wall.

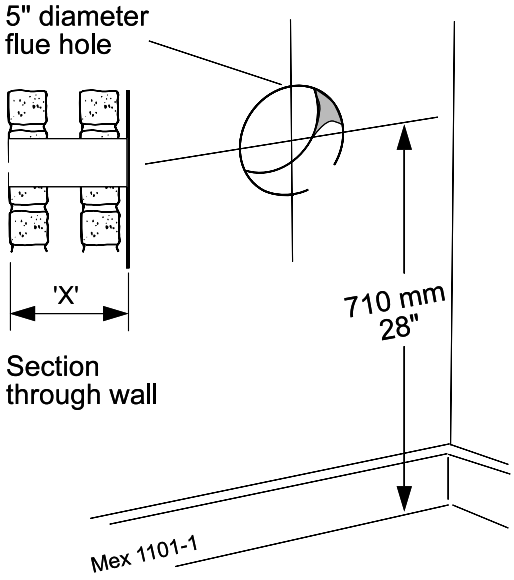

Note.
If the terminal is to be sited within 25-40mm of a corner or vertical pipe (refer to Table 3) then the hole MUST be accurately cut and the rubber weather seal trimmed around the groove provided. The terminal wall plate need not be fitted.

11 CUTTING THE FLUE - wall thicknesses of 114 to 600mm

1. Measure and note the wall thickness X.
2. Mark the wall thickness onto the flue.
3. To ensure the tube is cut square, mark the flue all the way round.
4. Cut to length X, using the cardboard ring for support.
5. Remove cardboard ring and remove any burrs.

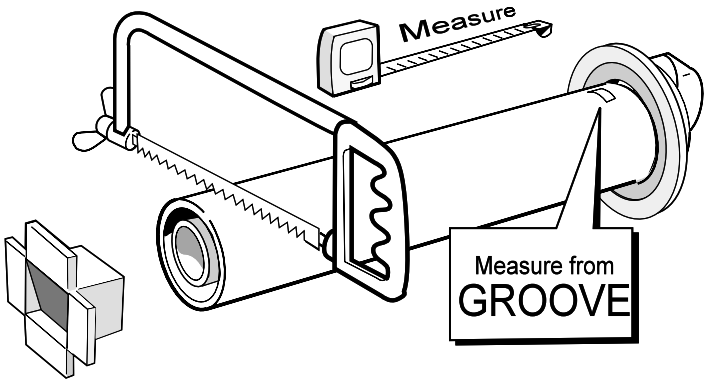

12 FITTING THE BOILER SEALING RING TO THE FLUE

1. Fit the boiler sealing ring inside the outer flue duct. Ensure the boiler sealing ring is fully engaged.

   Ensure the notch aligns with the groove on the outer flue duct. This ensures correct alignment of the flue terminal.
2. Drill 3 holes 3.2mm (1/8") dia. through the outer flue duct and boiler sealing ring. **Do NOT drill the inner flue duct.**
3. Insert the self-tapping screws, provided, in order to fix the boiler sealing ring in position.
4. If the boiler is located with the rear against the wall, stick the self-adhesive foam strip, provided in the hardware pack, onto the flue immediately behind the boiler sealing ring, otherwise refer to Frame 13.

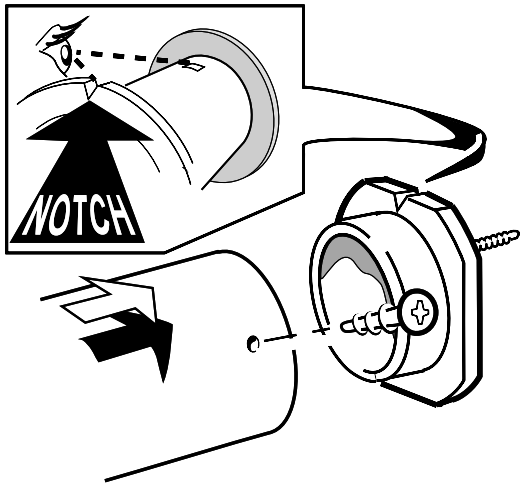

13 FITTING THE FOAM SEAL

1. To determine the position for the foam seal measure the wall thickness and mark it onto the flue, measuring from the groove near the terminal.
2. Wrap the self-adhesive foam strip round the flue, ensuring that the foam is on the terminal side of the line. This seals the gap between the flue and the wall.

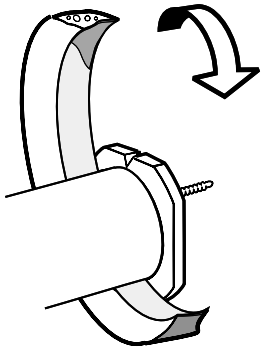

14 FITTING THE FLUE ASSEMBLY

A. Inside fitting.
If the flue assembly cannot be fitted from the outside, proceed as follows:

1. Insert the flue assembly through the hole far enough to allow the rubber seal to unfold completely and form an adequate seal on the outside wall.
2. Ensure the notch is at the top. This will aid the location of the studs into the boiler back panel.
3. Proceed to Frame 15, item B.

B. Outside fitting.
Proceed to Frame 15, item A.

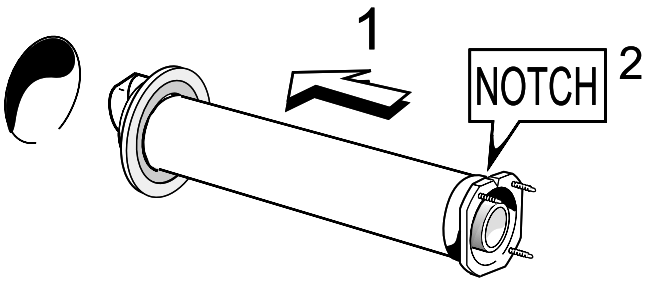

Mex 1102-1

15 LOCATING THE BOILER

A. If the flue assembly can be fitted from the outside, proceed as follows:

1. Move the boiler into position ensuring that the flue outlet is in line with the wall opening.
2. Insert the flue assembly ensuring that the flue slides into the flue extension and the 3 sealing ring studs locate into the boiler.

B. If the flue assembly has been fitted from the inside proceed as follows:

1. Move the boiler into position ensuring that the flue slides into the flue extension tube and the 3 sealing ring studs locate into the boiler back panel.

16 CONNECTING THE FLUE TO THE BOILER

1. Secure the flue to the boiler using the three M5 wing nuts provided.

Note.
The sealing plate studs will locate in the back panel one way only. This will ensure that the terminal is correctly aligned.

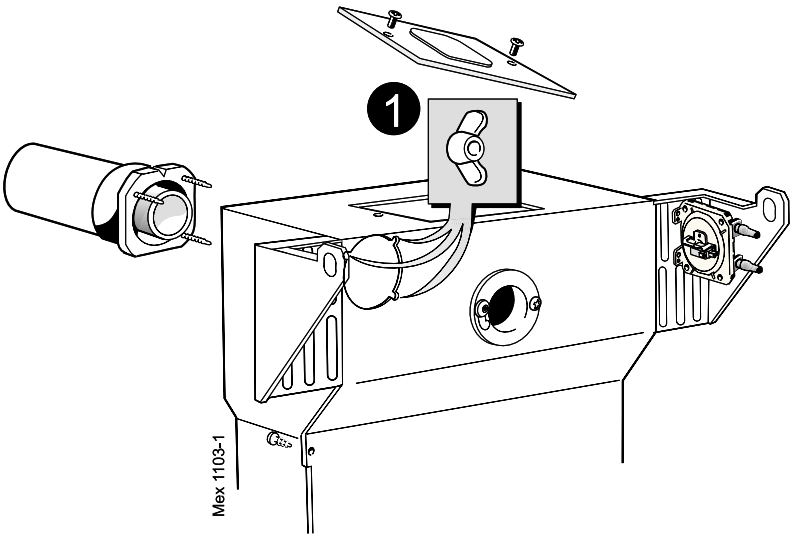

Mex 1103-1

17 SIDE FLUE ASSEMBLY - Exploded view

For wall thickness 114mm to 600mm

1. The boiler turret assembly is factory built for rear flue installation.
2. Remove the turret access cover.
3. Remove the sealing plate from the appropriate side to be used and refit in the rear outlet.
4. An optional flue duct extension kit is required for lengths (distance from the outside wall to the relevant side of the boiler casing) greater than 600mm (23 1/2") Refer to Frame 7.
5. When cutting the ducts always use the cardboard support provided.

LEGEND

1. Terminal.
2. Weather seal.
3. Flue assembly.
4. Boiler sealing ring.
5. Flue extension tube (medium with ring).
6. Elbow.
7. Side outlet plate.
8. Flue connector.
9. Sealing plate.
10. Turret access cover.

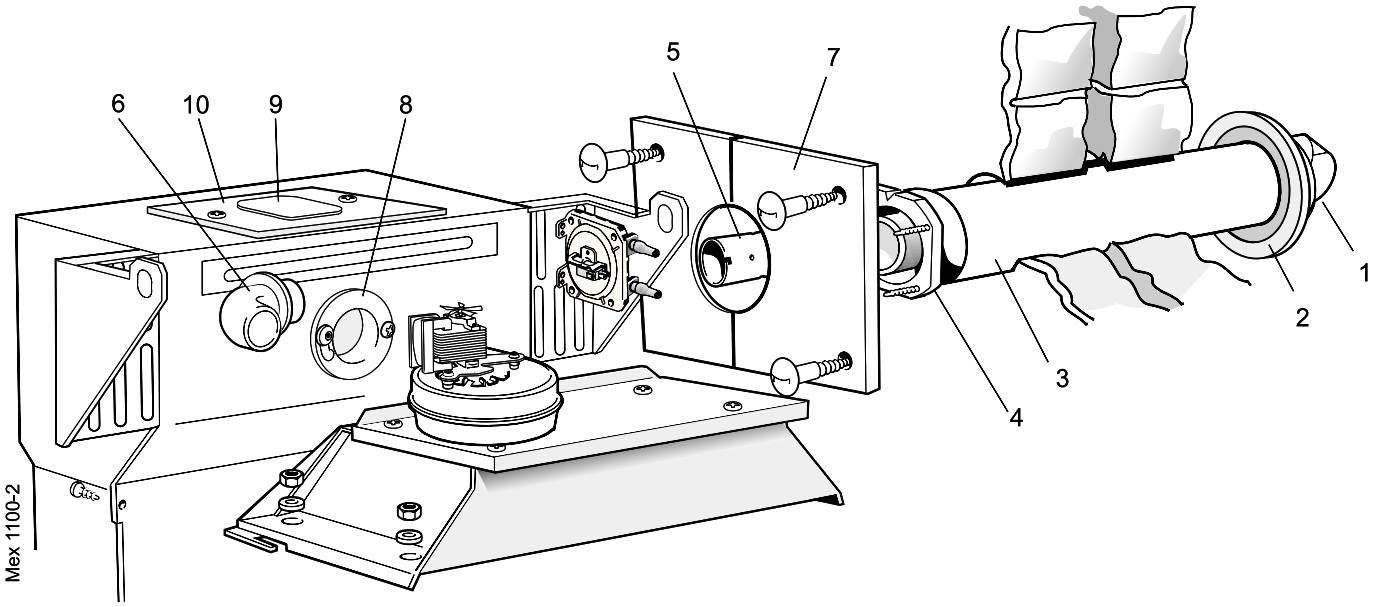

18 PREPARING THE WALL

1. Tape the template into the selected position.
2. Mark onto the wall the position of the flue duct hole.

IMPORTANT. Ensure that, during the cutting operation, masonry falling outside of the building does not cause damage or personal injury.

3. Cut the flue hole, preferably with a 125mm (5") core boring tool, ensuring that the hole is square to the wall. If the hole has been quite accurately cut with a drill then making good the wall faces is not essential as seals are provided at both ends of the flue. However, both wall faces immediately around the cut hole should be flat; make good if necessary. For less accurate holes make good to approximately 125mm (5") diameter at the 2 wall faces.

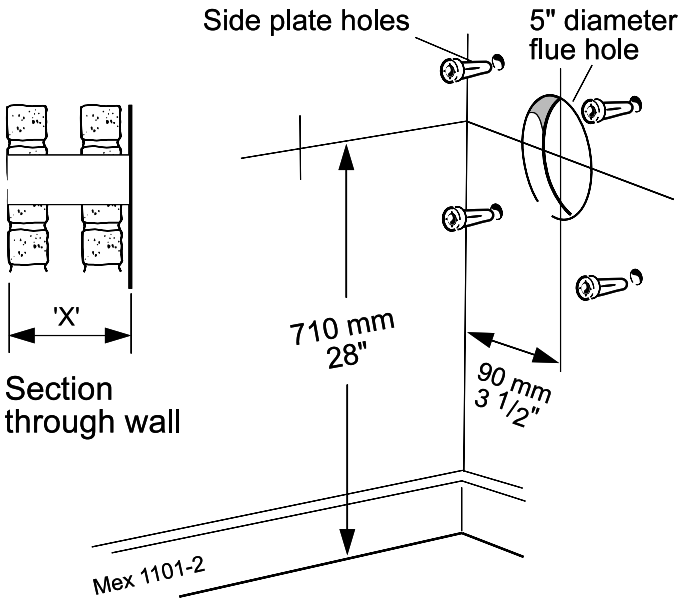

Note. *If the terminal is to be sited within 25-40mm of a corner or vertical pipe (refer to Table 3) then the hole MUST be accurately cut and the rubber weather seal trimmed around the groove provided. The terminal wall plate need not be fitted.*

19 CUTTING THE FLUE - wall thicknesses of 114 to 600mm

1. Measure and note the wall thickness X.
2. Mark the wall thickness onto the flue.
3. To ensure the tube is cut square, mark the flue all the way round.
4. Cut to length X, using the cardboard ring for support.
5. Remove cardboard ring and remove any burrs.

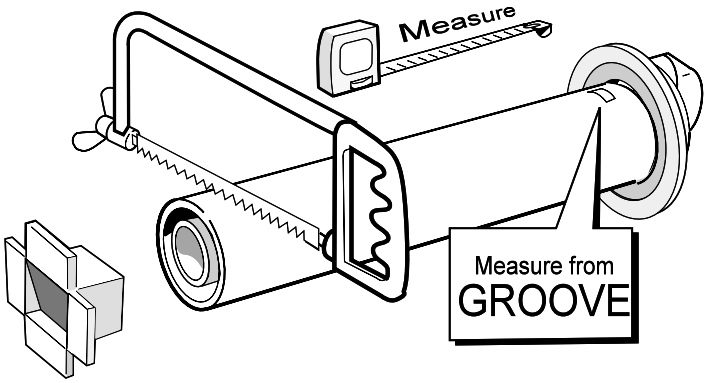

20 FITTING BOILER SEALING RING TO THE FLUE

1. Fit the boiler sealing ring inside the outer flue duct. Ensure the boiler sealing ring is fully engaged. Ensure the notch aligns with the groove on the outer flue duct. This ensures correct alignment of the flue terminal.
2. Drill 3 holes 3.2mm (1/8") dia. through the outer flue duct and boiler sealing ring. *Do not drill the inner flue duct*.
3. Insert the self tapping screws, provided, in order to fix the boiler sealing ring in position.

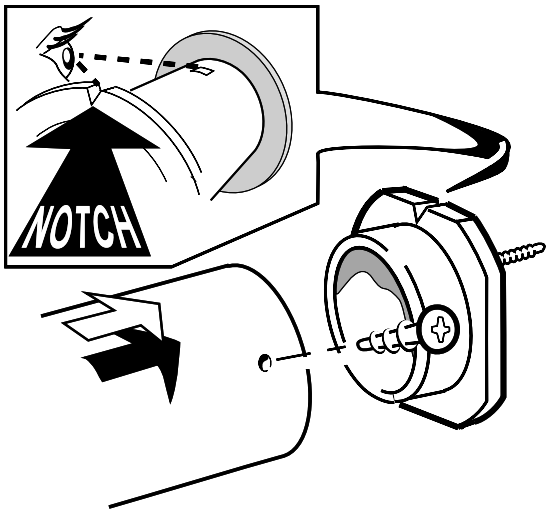

21 FITTING THE FOAM SEAL

1. To determine the position for the foam seal measure the wall thickness and mark it onto the flue, measuring from the groove near the terminal.
2. Wrap the self-adhesive foam strip round the flue, ensuring that the foam is on the terminal side of the line. This seals the gap between the flue and the wall.

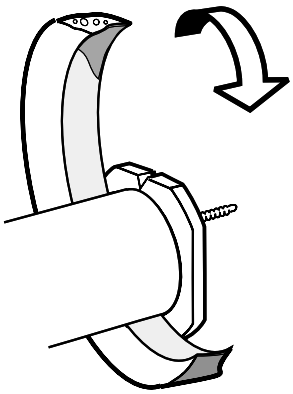

22 FITTING THE FLUE ASSEMBLY

A. Inside fitting.
If the flue assembly cannot be fitted from the outside, proceed as follows:

1. Insert the flue assembly through the hole far enough to allow the rubber seal to unfold completely and form an adequate seal on the outside wall.
2. Ensure the notch is at the top. This will aid the location of the studs into the boiler back panel.
3. Proceed to Frame 25, item B.

B. Outside fitting.
Proceed to Frame 25, item A.

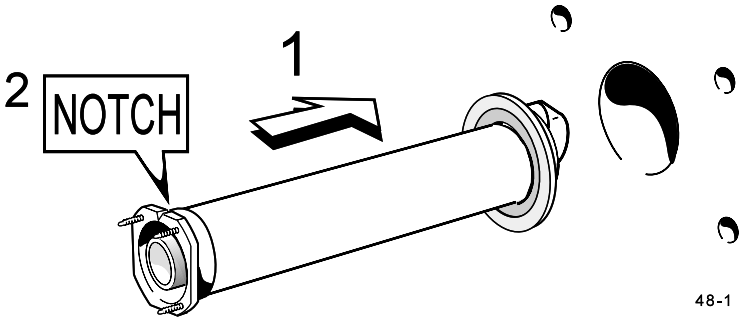

23 FITTING THE SIDE OUTLET PLATES

Note. *If the boiler is fitted closer than 25mm to the side wall the side outlet plate must be fitted now.*

1. Split the side outlet plate into 2 down the split line.
2. Fit the 2 halves of the side outlet plate to the wall, ensuring they are behind the boiler sealing ring.

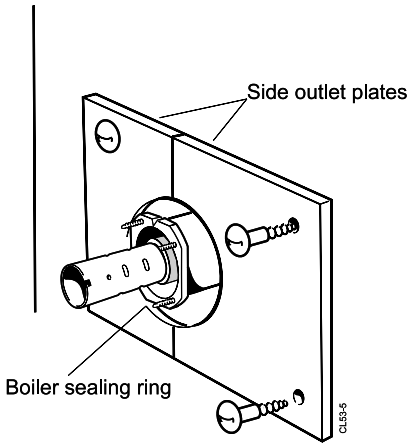

24 LOCATING THE BOILER

A. If the flue assembly can be fitted from the outside, proceed as follows:

1. Move the boiler into position ensuring that the flue outlet is in line with the wall opening.
2. Insert the flue assembly ensuring that the flue slides into the flue extension and the 3 sealing ring studs locate into the boiler.

B. If the flue assembly has been fitted from the inside proceed as follows:

1. Move the boiler into position ensuring that the flue slides into the flue extension tube and the 3 sealing ring studs locate into the boiler back panel.

25 CONNECTING THE FLUE TO THE BOILER

1. Secure the flue to the boiler, using the three M5 wing nuts provided.
2. Fit the medium length extension tube (with ring) to the flue elbow, rotate in the bayonet slot and secure with the M4 screw.
3. Engage the extension tube into the flue outlet, connect the elbow to the fan outlet and secure with the M4 screw.

Note.
The sealing plate studs will locate in the back panel one way only. This will ensure that the terminal is correctly aligned.

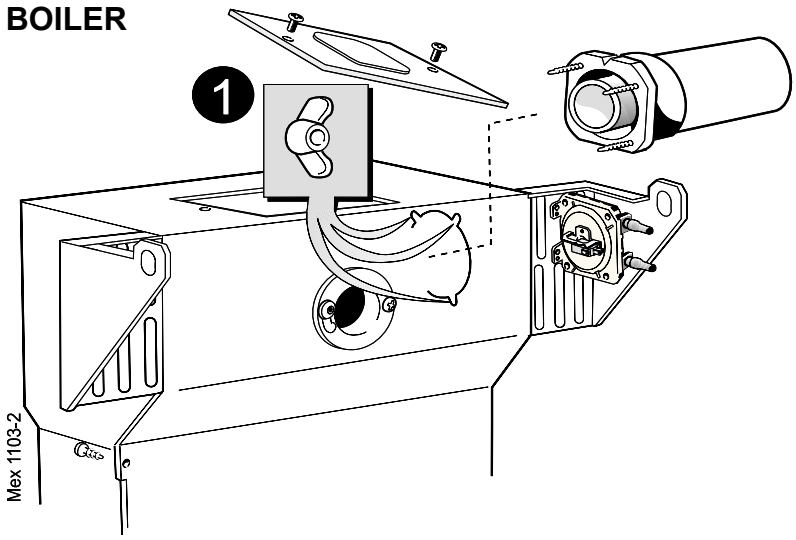

26 TOP FLUE OUTLET ASSEMBLY - Exploded view

Note.
For the number of extension ducts required see Frame 36.

1. The boiler turret assembly is factory built for rear flue installation.
2. Remove the turret access cover.
3. Remove the sealing plate from the turret access cover and refit in the rear outlet.
4. Fit the outlet flue elbow pointing upwards, rotate in the bayonet slot and secure with the M4 screw.
5. Fit the short extension tube (with no ring) to the flue elbow, rotate in the bayonet slot and secure with the M4 screw.
6. An optional flue duct extension kit is required for lengths (distance from the outside wall to the relevant side of the boiler casing) greater than 600mm (23 1/2") Refer to Frame 7.
7. When cutting the ducts always use the cardboard support provided.

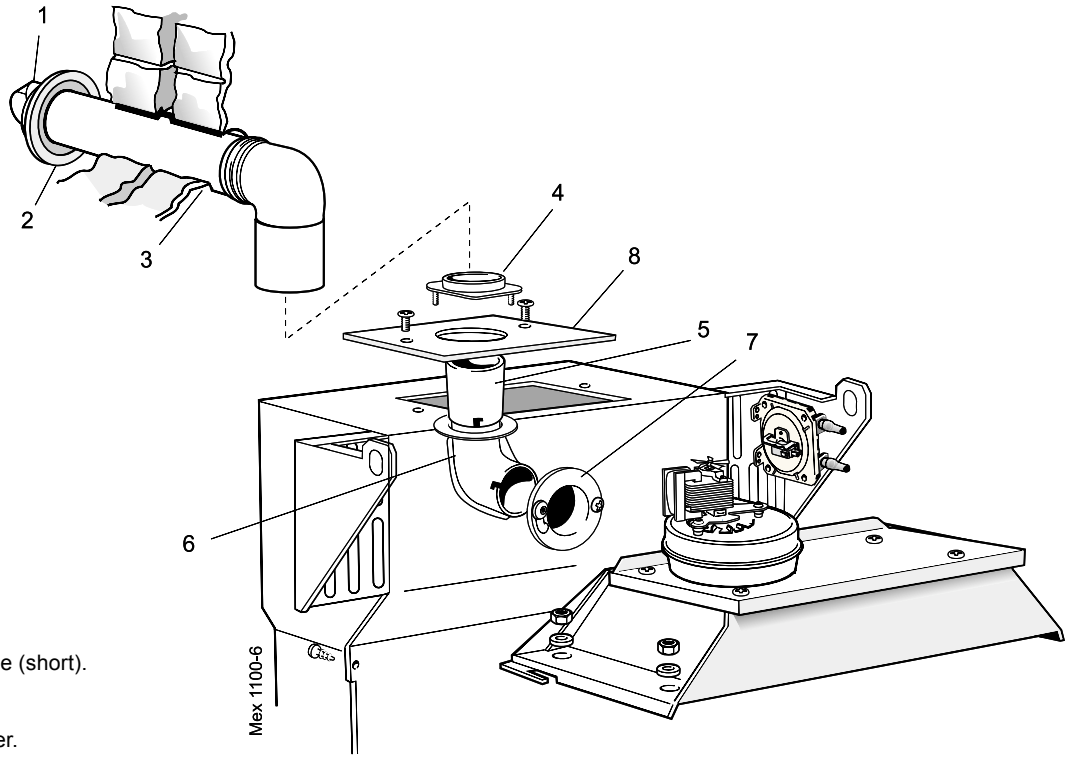

LEGEND
1. Terminal.
2. Weather seal.
3. Flue assembly.
4. Boiler sealing ring.
5. Flue extension tube (short).
6. Elbow.
7. Flue connector.
8. Turret access cover.

27 PREPARING THE WALL

1. Mark onto the wall the position of the flue duct hole.

IMPORTANT. Ensure that, during the cutting operation, masonry falling outside of the building does not cause damage or personal injury.

2. Cut the flue hole, preferably with a 125mm (5") core boring tool, ensuring that the hole is square to the wall. If the hole has been quite accurately cut with a drill then making good the wall faces is not essential as seals are provided at both ends of the flue. However, both wall faces immediately around the cut hole should be flat; make good if necessary. For less accurate holes make good to approximately 125mm (5") diameter at the two wall faces.

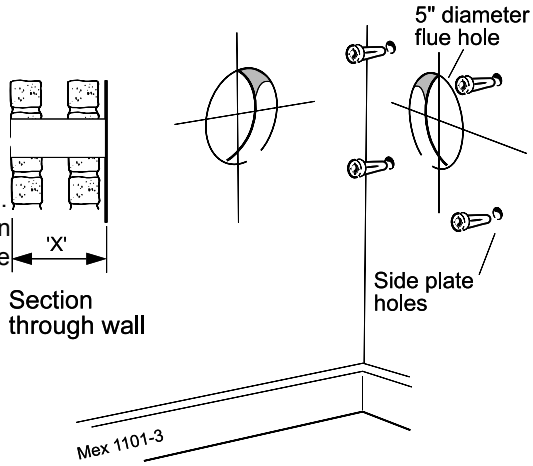

Note. *If the terminal is to be sited within 25-40mm of a corner or vertical pipe (refer to Table 3) then the hole MUST be accurately cut and the rubber weather seal trimmed around the groove provided. The terminal wall plate need not be fitted.*

28 CUTTING THE FLUE - wall thicknesses of 114 to 600mm

1. Measure and note the wall thickness X.
2. Mark the wall thickness onto the flue.
3. To ensure the tube is cut square, mark the flue all the way round.
4. Cut to length X, using the cardboard ring for support.
5. Remove cardboard ring and remove any burrs.

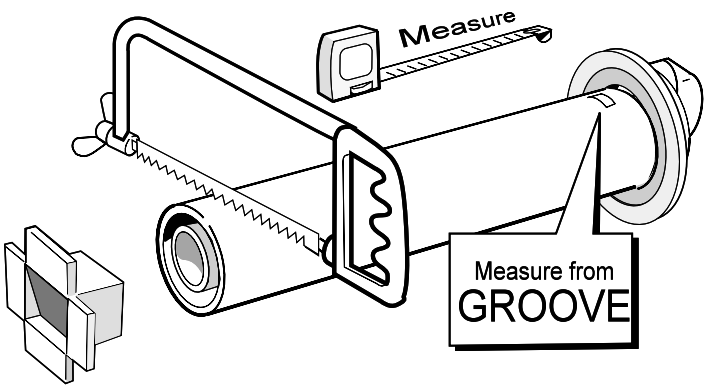

29 FITTING BOILER SEALING RING TO THE FLUE

1. Fit the boiler sealing ring inside the appropriate length (A) of outer flue duct (refer to Frame 7). Ensure the boiler sealing ring is fully engaged.
2. Drill 3 holes 3.2mm (1/8") dia. through the outer flue duct and boiler sealing ring. *Do not drill the inner flue duct*.
3. Insert the self tapping screws, provided, in order to fix the boiler sealing ring in position.
4. Fit the turret access cover to the sealing ring.

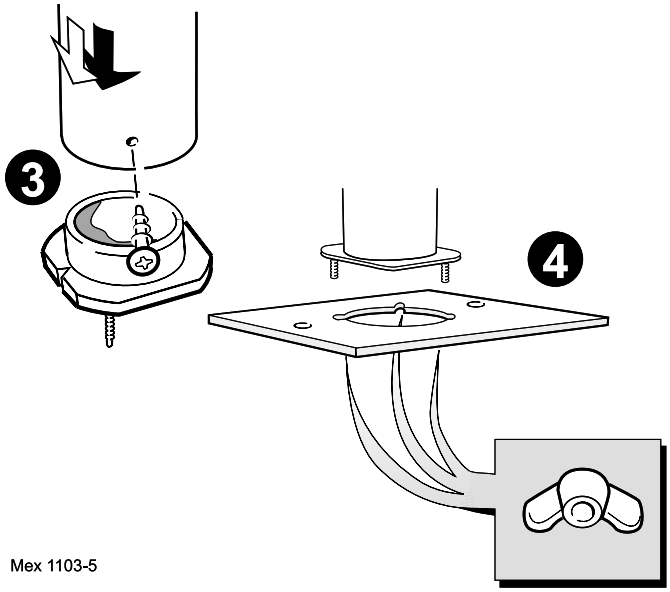

30 FITTING THE FOAM SEAL

1. To determine the position for the foam seal measure the wall thickness and mark it onto the flue, measuring from the groove near the terminal.
2. Wrap the self-adhesive foam strip round the flue, ensuring that the foam is on the terminal side of the line. This seals the gap between the flue and the wall.

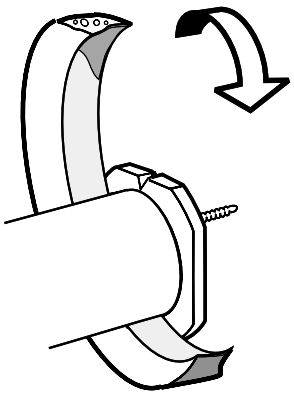

TOP FLUE OUTLET

31 FITTING THE FLUE ASSEMBLY

Inside fitting.

1. Insert the flue assembly through the hole far enough to allow the rubber seal to unfold completely and form an adequate seal on the outside wall.
2. Ensure the notch is at the top.

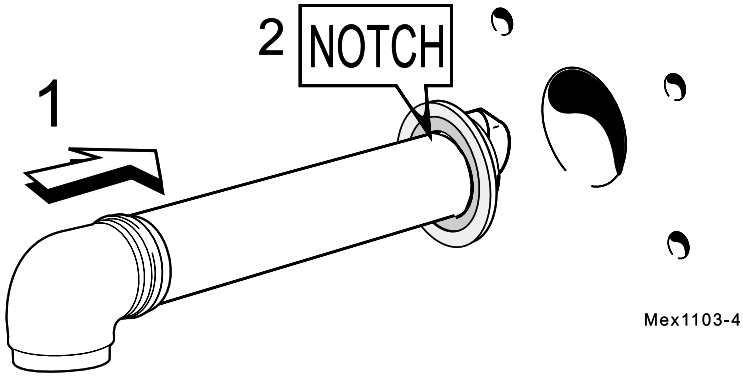

32 FITTING THE SIDE OUTLET PLATES

Note. *If the boiler is fitted closer than 25mm to the side wall the side outlet plate must be fitted now.*

1. Split the side outlet plate into 2 down the split line.
2. Fit the 2 halves of the side outlet plate to the wall, ensuring they are behind the boiler sealing ring.

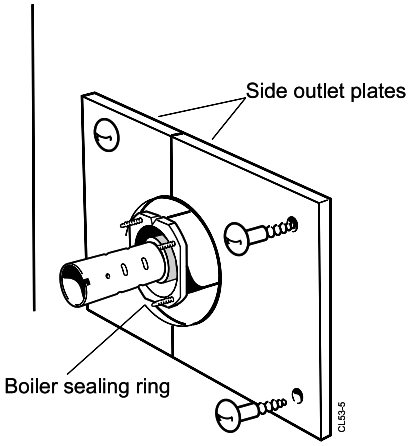

33 LOCATING THE BOILER

Position the boiler beneath the flue assembly.

34 CONNECTING THE FLUE TO THE BOILER

1. Connect the flue terminal to the boiler, using the length (A) of flue duct previously cut and ensuring that the inner flue locates into the short extension tube.
2. Secure the flue to the boiler using the 2 M4 x 16mm screws previously removed.

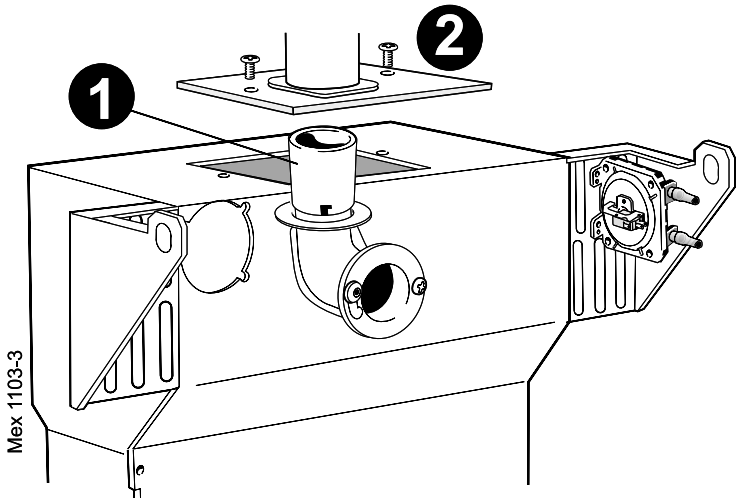

35 FLUE EXTENSION DUCTS

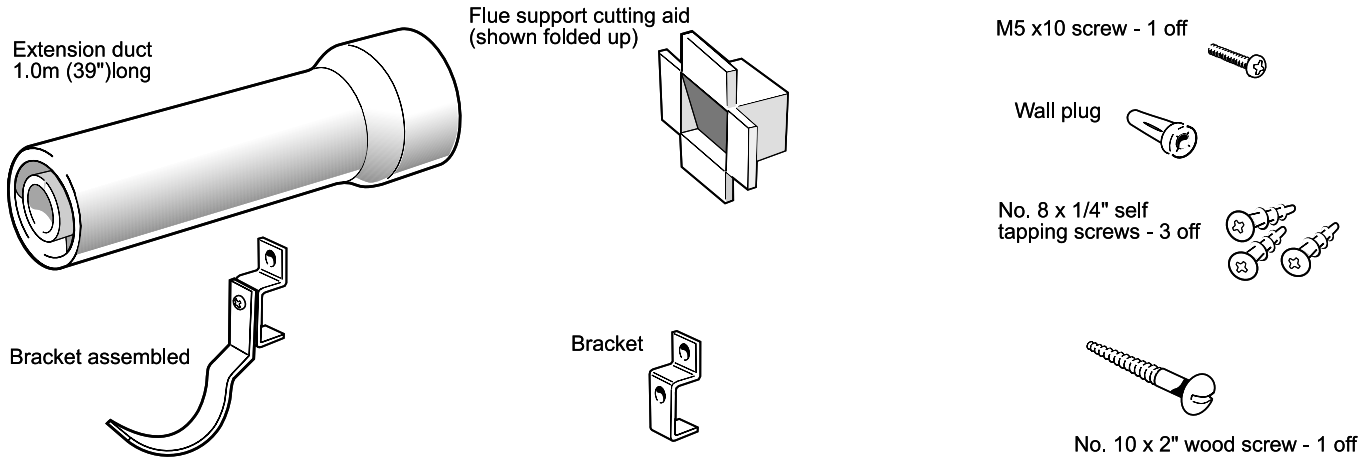

36 FLUE EXTENSION DUCTS - continued

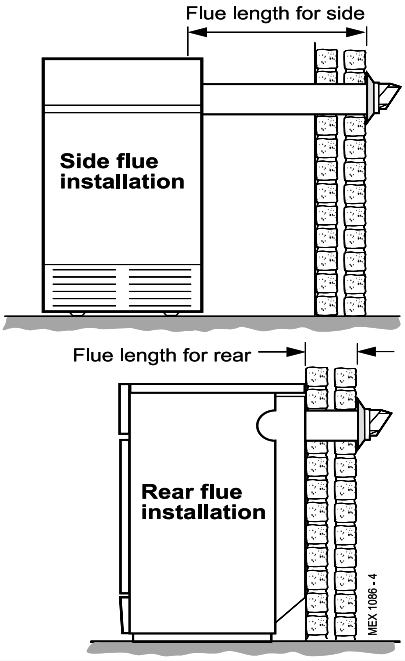

Top outlet flue length = A + B + Elbow allowance

90° Elbow = 1m

45° Elbow = 0.7m

FLUE KITS

Pack B: supplied as standard.

Pack D: optional extension kit for side, top or rear flue outlet. Refer to Frame 35.

1. A maximum of 3 extension ducts (plus the standard flue duct) may be used together.
2. Flue extensions of greater than 1m (39") should be supported with the bracket provided.

Flue length mm	Pack Requirement	Product No.
Up to 600	B, 1 off	152 227
600 to 1550	B, 1 off + D, 1 off	152227+152132
1550 to 2500	B, 1 off + D, 2 off	152 227+ 152132, 2 off
2500 to 3000	B, 1 off + D, 3 off	152 227+ 152132, 3 off

37 FITTING THE KIT

1. Remove the cardboard support aid from the flue and place safely to one side.
2. Fit the inner flue extension duct onto the inner flue duct.
3. Fit the outer flue extension duct onto the outer air duct.
4. Drill 3 - 3.2mm (1/8") dia. holes through the outer air duct. ***Do not drill the inner flue duct.***
5. Insert the self tapping screws provided to fix the air duct in position.
6. Repeat steps 1-5 if a second flue extension is required.

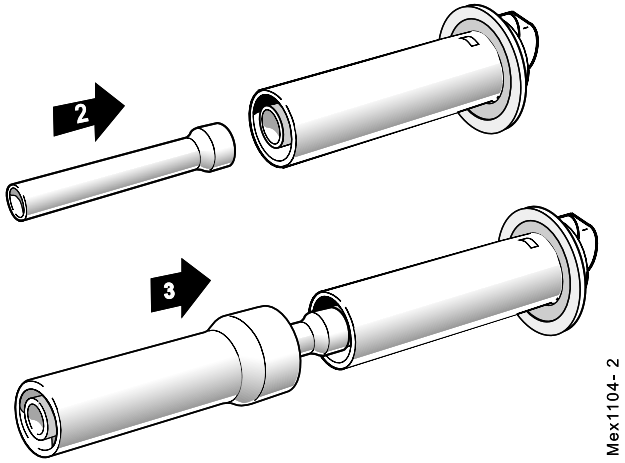

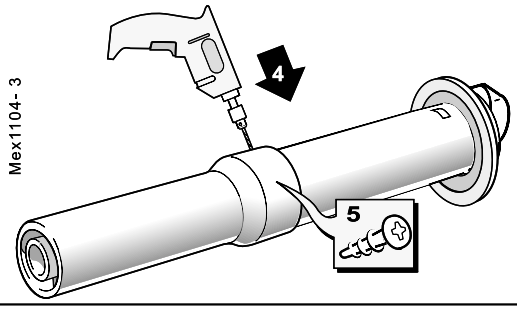

38 TERMINAL WALL PLATE

This plate allows neat concealment and full compression of the rubber seal. Its use is not essential if the flue hole and flue ducts have been accurately cut and the outside wall face is flat.

1. Position the terminal wall plate over the terminal.
2. Mark and drill 4 fixing holes with an 7mm (9/32") masonry drill.
3. Insert the 4 plastic plugs provided.
4. Secure the plate with 4 of the No.10 x 2" screws provided.

Note. *If the terminal is less than 2m (6' 6") above ground level, an approved terminal guard should be fitted. Refer to the Contents List on Page 4.*

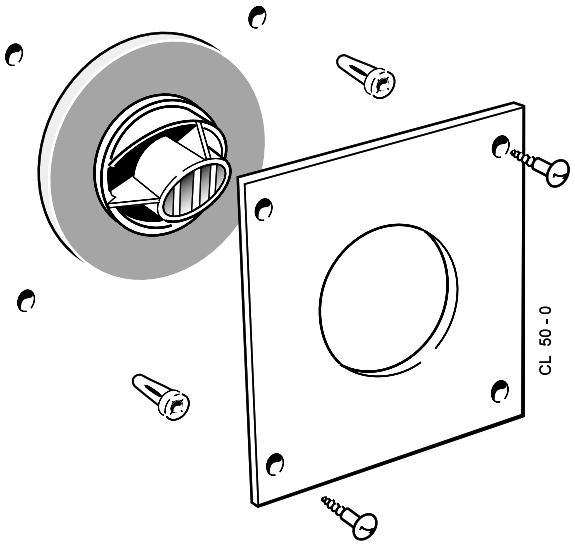

39 GAS CONNECTION

1. A MINIMUM working gas pressure of 20 mbar (8 in.w.g.) MUST be available at the boiler inlet, with the boiler operating.
2. Extend a gas supply pipe NOT LESS THAN 15mm (1/2") OD to the boiler and connect to the gas cock situated at the front LH side of the boiler.
3. Test the gas installation for soundness and purge in accordance with BS.6891: 1988. Refer to Frame 52.

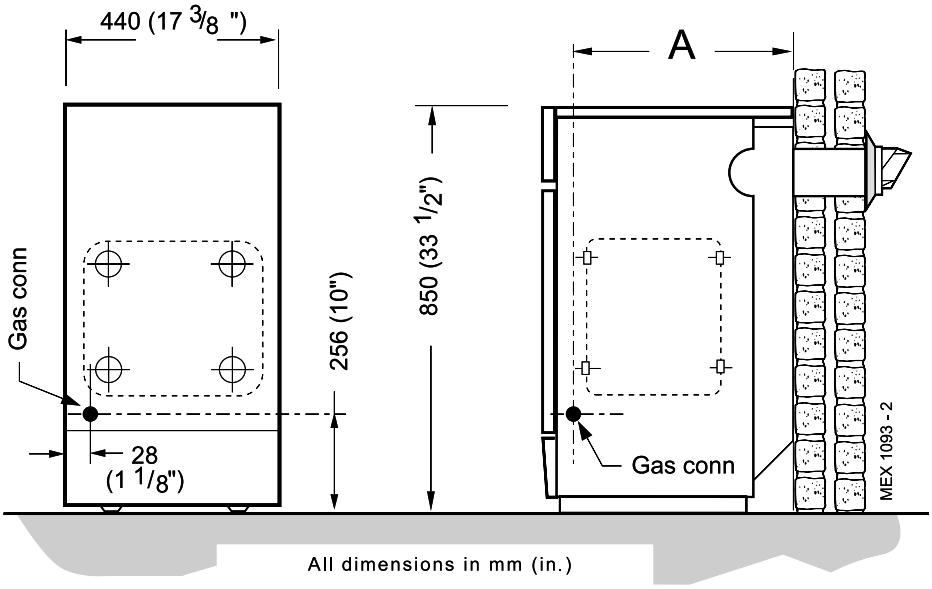

Boiler	Dimension A
40 FF	327 (12 7/8")
50 FF - 80 FF	400 (15 3/4")

40 WATER CONNECTIONS

1. Connect the system flow and return pipework to the boiler as appropriate. Refer to Frames 41 and 42 for guidance on system design.

   Note. *When the required output exceeds 14.4 kW (49 000 Btu/h) then 28mm (1") pumped flow and return pipes should be used, both to and from the boiler.*

   Gravity connections MUST be at least 28mm (1").

2. Ensure that all valves are open. Fill and vent the system and check for water soundness.

Notes.

a. *Isolating valves must be fitted as close to the pump as possible.*

b. *The boiler is not suitable for a sealed system unless the overheat thermostat kit is installed.*

c. *The boiler is not suitable for use with a direct hot water cylinder.*

41 MINIMUM REQUIREMENTS Fully pumped systems

1. Open vent and cold feed connections must be made to the boiler flow and return tappings according to the options shown in Frame 8.
2. The boiler is assumed to be the highest point of the circulating system.
3. The circulating pump is positioned on the FLOW and the vertical distance, between the pump and feed/ expansion tank, must comply with the pump manufacturer's minimum requirements, to avoid cavitation. Should these conditions not apply, either lower the pump position or raise the feed/ expansion tank above the minimum requirements of **Caradon Plumbing Ltd.**
4. The water velocity through the boiler flow / return pipes is assumed to be below 1 m/s (3 ft./s), whilst the pump flow rate is set to provide a temperature difference of 11°C (20 °F) across the boiler flow / return, at design input.
5. This information is intended as a GUIDE ONLY and cannot take into account instantaneous changes in head caused by the operation of motorised valves, pumps etc.

   Due allowance MUST be made if surging is liable to occur.

   If in any doubt, contact **Caradon Plumbing Ltd.**

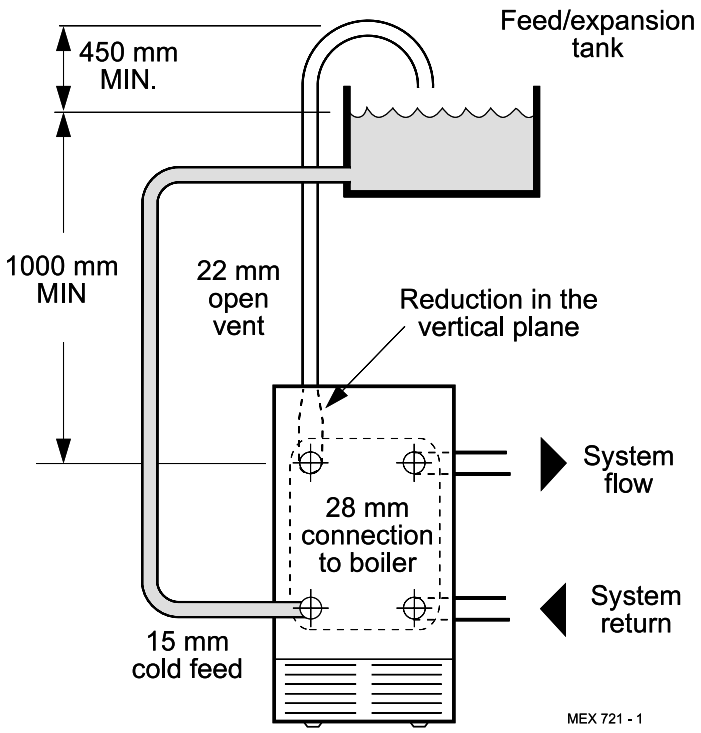

42 GRAVITY HOT WATER & PUMPED CENTRAL HEATING

1. Separate flow and return connections are used for each service. All possible configurations are given in Frame 8 and *ONLY those shown should be used.*
2. The schematic pipework graph is based on the assumption that NO MORE than 8 elbows are used in the gravity loop, including entry to the boiler.
3. For each extra elbow in excess of 8 (R) MUST be reduced by 300 mm (12") or (H) increased by 100 mm (4")
4. Whatever value is selected for (R), the value of (H) MUST be at least that indicated by the graph.

   (R) = *the horizontal distance between the centre line of the cylinder and the boiler tappings used - measured along the pipe run.*

   (H) = *the vertical distance between the top of the boiler and the base of the cylinder.*

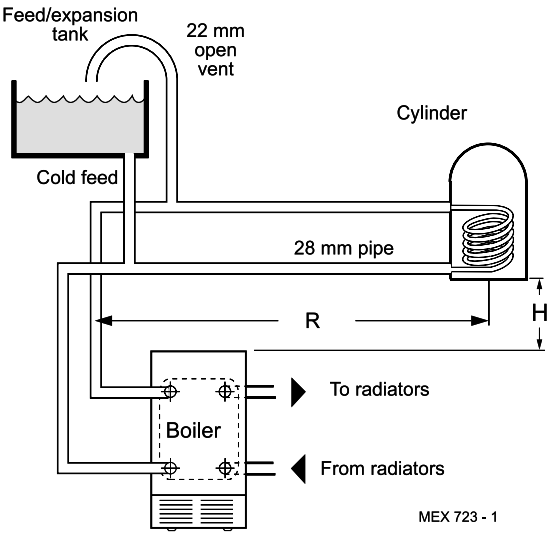

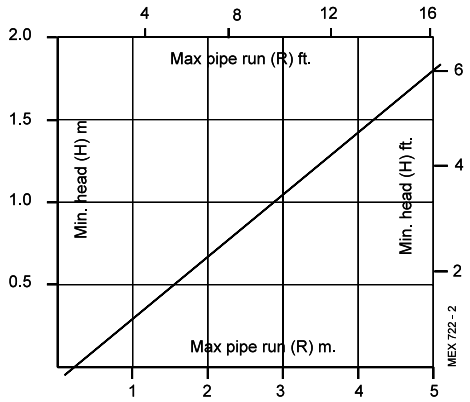

Notes.

a. *Flow and return pipes should rise vertically on leaving the boiler.*

b. *Horizontal pipes should be ABOVE ceiling level and as short as possible.*

c. *A MINIMUM inclination of 25 mm per 3 m run (1" per 10') is required to avoid air locks.*

If the above conditions cannot be met pumped primaries should be used.

43 ELECTRICAL CONNECTIONS

WARNING
The appliance MUST be efficiently earthed.

A mains supply of 230 V ~ 50 Hz is required.

The fuse rating should be 3A.

All external controls and wiring MUST be suitable for mains voltage.

Wiring should be in 3-core PVC insulated cable NOT LESS than 0.75 mm^2 (24 x 0.2 mm) to BS.6500, Table 16.

Wiring external to the boiler MUST be in accordance with current I.E.E. (BS.7671) Wiring Regulations and local regulations.

Connection must be made in a way that allows complete isolation of the electrical supply - such as a double pole switch, having a 3mm (1/8") contact separation in both poles, or a plug and socket serving only the boiler and system controls.

The means of isolation must be accessible to the user after installation.

This connection should be readily accessible and be made adjacent to the boiler (except in the case of bathroom installations for domestic boilers where the point of connection to the mains MUST be outside of the bathroom.)

44 INTERNAL WIRING

Flow and pictorial wiring diagrams are shown in Frames 45 and 46. A schematic wiring diagram is included in the Lighting Instruction label.

1. Remove the securing screw and lift off the control box cover.
2. Route the electrical leads into the box and wire into the terminal strip, as shown.

Notes.
a. *Secure each lead with one of the cable clamps.*

b. *The mains lead connection MUST be made so that, should the lead slip from its anchorage, the current conductors become taut before the earthing conductor.*

LEGEND

w	white	**p**	purple
r	red	**b**	blue
bk	black	**gy**	grey
br	brown	**y/g**	yellow/green

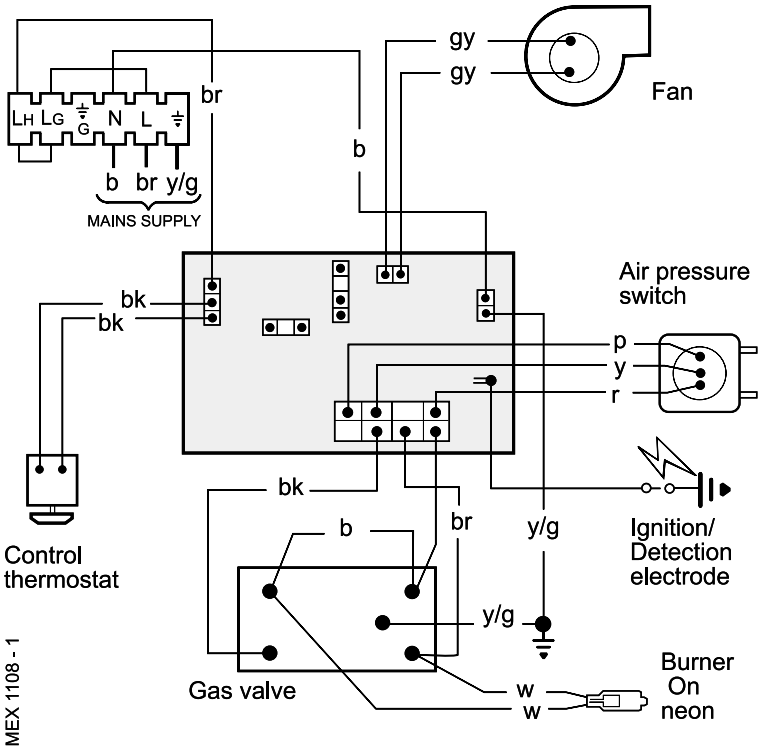

45 EXTERNAL CONTROLS

External wiring must be in accordance with the current I.E.E. (BS 7671) Wiring Regulations.
The wiring diagrams illustrated in Frames 47-49 cover the systems most likely to be fitted to this appliance.
For wiring external controls to the **Mexico Super FF** boiler reference should be made to the system wiring diagrams supplied by the relevant manufacturer, in conjunction with the flow wiring diagram below and also Frame 46.
Difficulty in wiring should not arise, providing the following directions are observed:

1. Controls that switch the system ON and OFF, e.g. a time switch, MUST be wired, in series, in the live mains lead to the boiler.
2. Controls that override an on/off control, e.g. a frost thermostat, MUST be wired into the mains lead, in parallel, with the control(s) to be overridden. Refer to Frame 50.
3. If a proprietary system is used, follow the instructions supplied by the manufacturer.

Note. *If there are no external controls the circulating pump MUST be wired into the control box.*

Flow wiring diagram (FF Models)

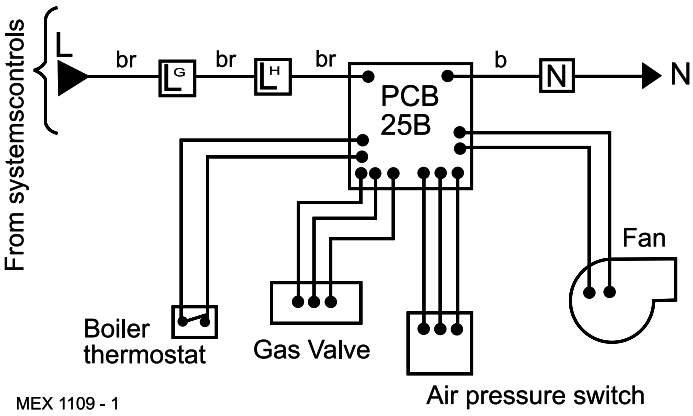

46 PICTORIAL WIRING

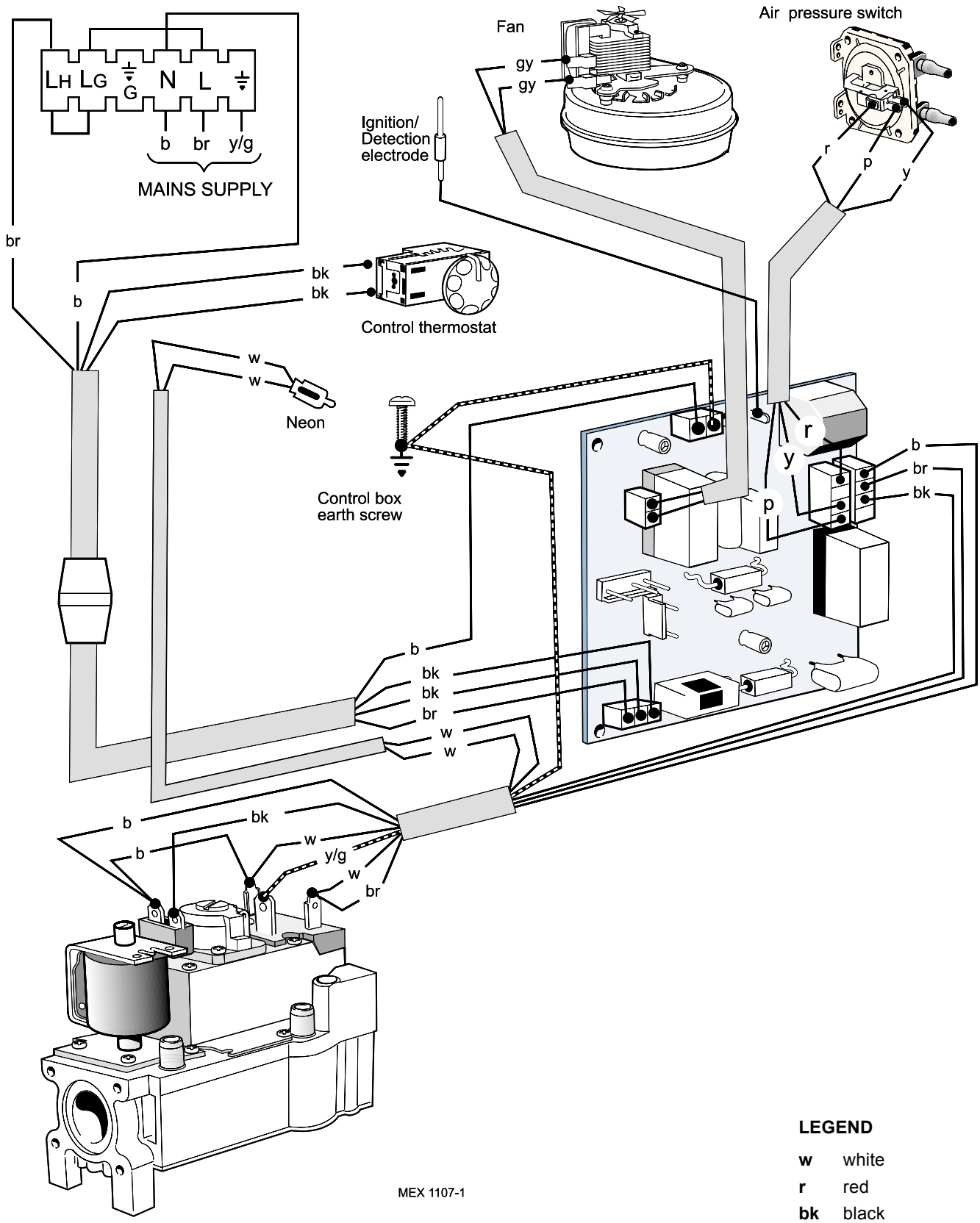

LEGEND

w	white
r	red
bk	black
br	brown
p	purple
b	blue
gy	grey
y/g	yellow/green

47 MID POSITION VALVE

Pumped only

Notes.

1. *Some earth wires are omitted for clarity. Ensure proper earth continuity when wiring.*
2. *Numbering of terminals on thermostats is specific to the manufacturer indicated.*
3. *This is a fully controlled system - set the boiler thermostat to maximum.*
4. *'Switchmaster Midi' is similar in operation but the wiring differs slightly; see manufacturer's literature.*

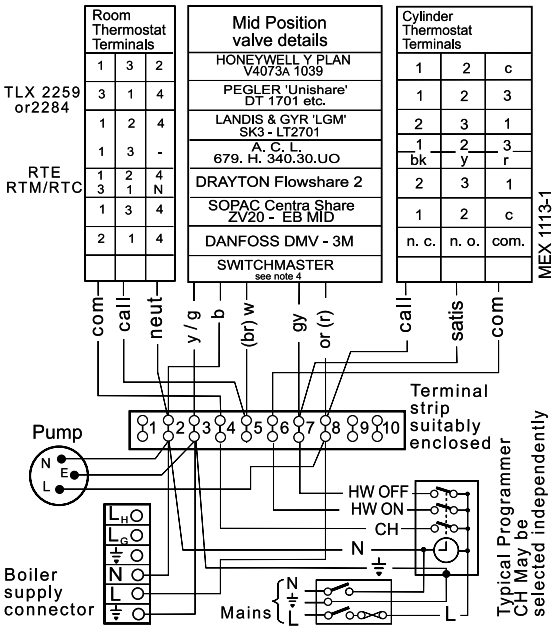

LEGEND

b	blue	**br**	brown	**w**	white
bk	black	**r**	red	**gy**	grey
		or	orange	**y/g**	yellow/green

48 TWO SPRING CLOSED VALVES

Pumped only

Notes.

1. *Some earth wires are omitted for clarity. Ensure proper earth continuity when wiring.*
2. *Numbering of terminals on thermostats is specific to the manufacturer.*
3. *This is a fully controlled system - set the boiler thermostat to maximum.*
4. *'Switchmaster Autozone' has grey and orange auxiliary switch leads but the ORANGE (NOT the grey) wire must be connected to the incoming live supply.*

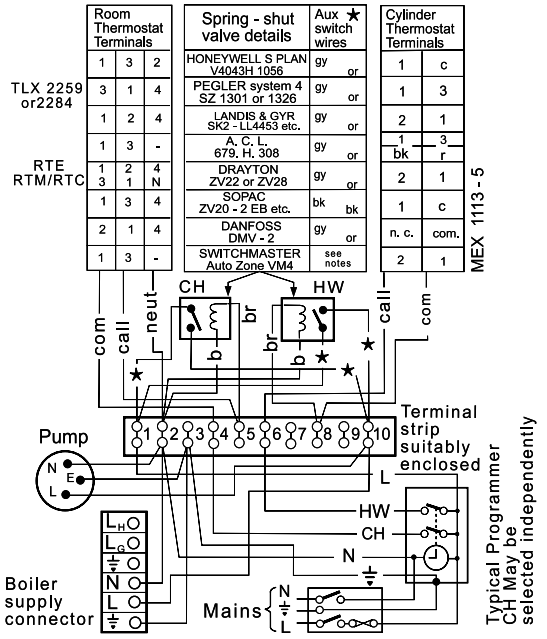

LEGEND

b	blue	**br**	brown	**or**	orange
bk	black	**r**	red	**y/g**	yellow/green
		w	white	**gy**	grey

49 HONEYWELL 'C' PLAN

Gravity HW & Pumped CH

Notes.

1. *Some earth wires are omitted for clarity. Ensure proper earth continuity when wiring*
2. *Numbering of terminals on thermostats is specific to the manufacturer.*

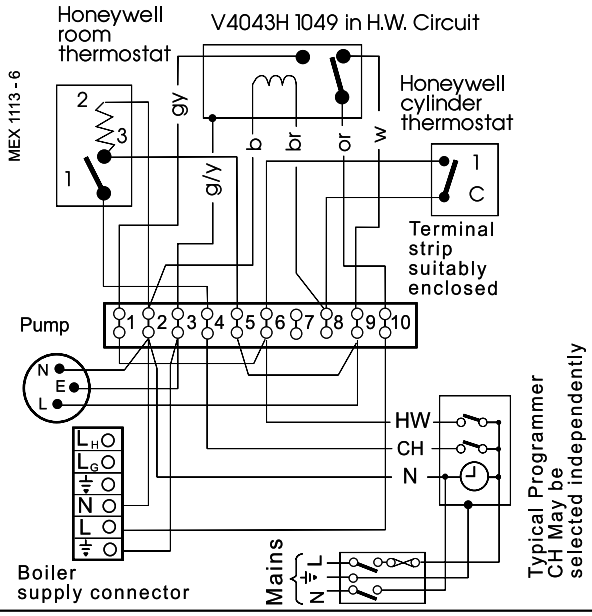

LEGEND

w	white	**bk**	black	**b**	blue
r	red	**br**	brown	**gy**	grey
		or	orange	**y/g**	yellow/green

50 FROST PROTECTION

Central heating systems fitted wholly inside the house do not normally require frost protection as the house acts as a 'storage heater' and can normally be left at least 24 hrs. without frost damage. However, if parts of the pipework run outside the house or if the boiler will be left off for more than a day or so then a frost 'stat should be wired into the system.

This is usually done at the programmer, in which case the programme selector switches are set to OFF and all other controls MUST be left in the running position.

The frost 'stat should be sited in a cold place but where it can sense heat from the system.

Wiring should be as shown, with minimal disturbance to other wiring of the programmer.

Designation of the terminals will vary, but the programmer and thermostat manufacturer's leaflets will give full details.

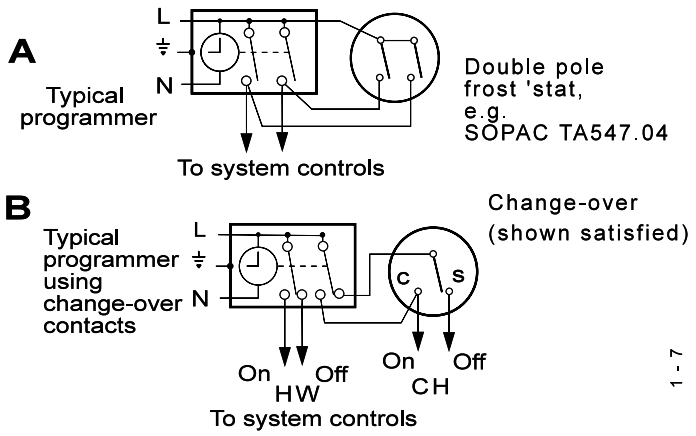

Diagram A shows a double pole frost thermostat, which should suffice for all systems which do not use the OFF terminals of the programmer.

Diagram B shows a 'change-over' frost thermostat, which will cover most systems which do use CH OFF. If, however, on such a system the HW pipework is in an isolated part of the house, a second frost thermostat may be used to protect it.

If in doubt, ask your installer for advice.

51 FITTING THE CASING

1. Offer up the RH side panel, locating it with the peg in the baseplate, and push the panel back engaging it into the collector hood tab.
2. Secure the panel to the baseplate and turret front panel.
3. Repeat steps 1 and 2 to refit the LH side panel.
4. Place the top panel and push back.
5. Secure the top panel to the side panels.

IMPORTANT. Wiring within the boiler casing must be neatly secured with the cable straps provided and MUST NOT be allowed to touch the fan cooling impellor, the burner front plate, or the cleanout cover and the collector hood.

6. Replace the control box cover and refit the control panel using the screws previously removed.

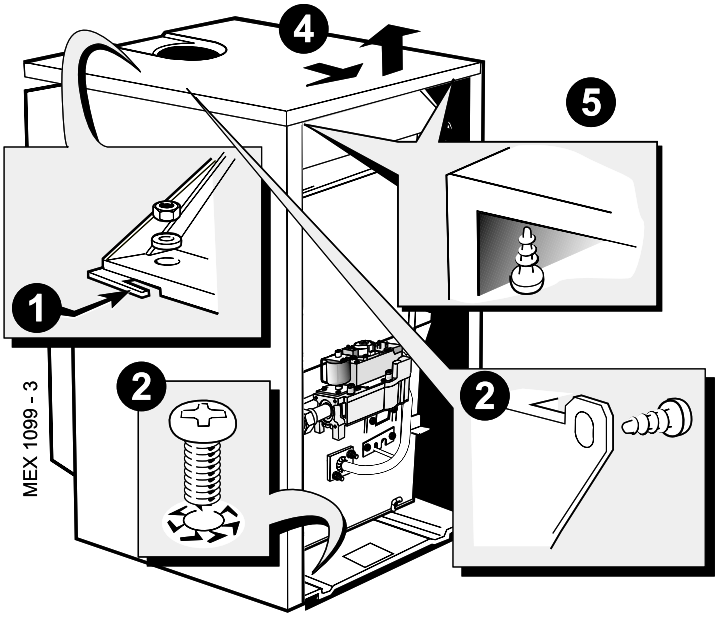

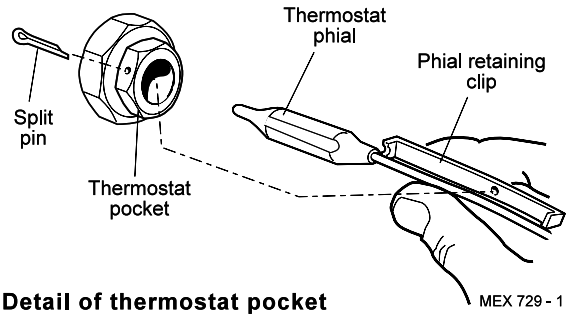

Detail of thermostat pocket

7. Insert the thermostat phial and phial retaining clip into the thermostat pocket. Take care not to kink the thermostat capillary as it is unwound and secure it with the split pin as shown.
8. Refit the in-line electrical connector between the control box and the PCB box.
9. Refit the grille assembly

52 COMMISSIONING AND TESTING

A. ELECTRICAL INSTALLATION

1. Checks to ensure electrical safety should be carried out by a competent person.

2. ALWAYS carry out preliminary electrical system checks, i.e. earth continuity, polarity, resistance to earth and short circuit using a suitable test meter.

B. GAS INSTALLATION

1. The whole of the gas installation, including the meter, MUST be inspected and tested for soundness, and purged in accordance with the recommendations of BS. 6891.
2. Purging air from the gas installation may be expedited by loosening the union on the gas service cock on the boiler and purging until gas is detected.
3. Retighten the union and check for gas soundness.

WARNING.
Whilst effecting the required gas soundness test and purging air from the gas installation, open all windows and doors, extinguish naked lights and **DO NOT SMOKE.**

53 INITIAL LIGHTING

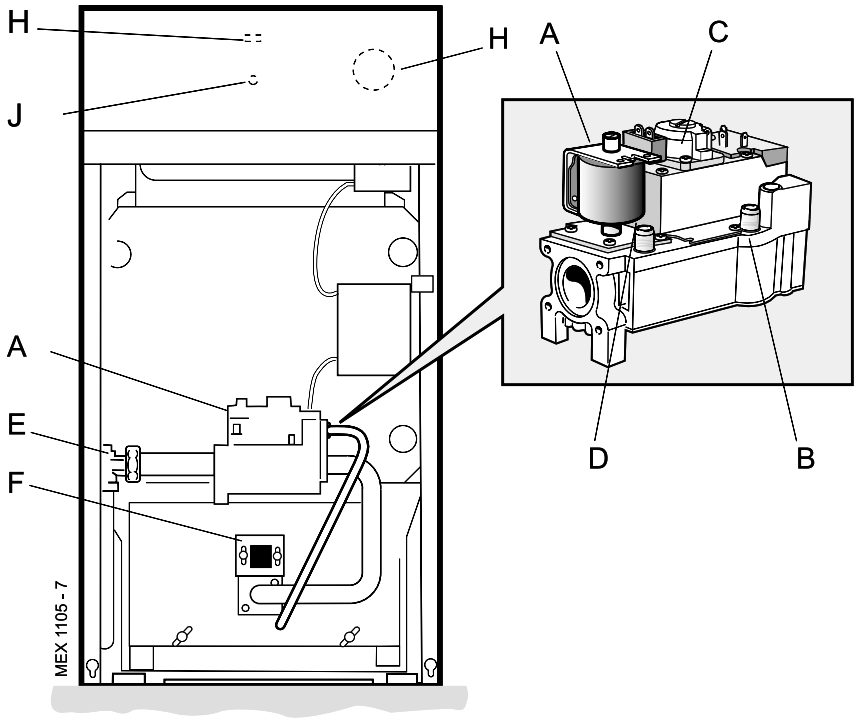

LEGEND
- **A.** Gas control valve.
- **B.** Burner pressure test point.
- **C.** Main burner pressure adjuster.
- **D.** Inlet pressure test point.
- **E.** Gas service cock.
- **F.** Sightglass.
- **G.** Boiler thermostat knob.
- **H.** Main burner 'On' neon.
- **J.** Overheat thermostat reset button (optional).

TO LIGHT THE BOILER

1. Check that all the drain cocks are closed and any valves in the flow and return are open.

2. Check that the gas service cock (E) is OPEN and the boiler mains on/off switch is OFF.

3. If the boiler output is to be set to minimum or mid, affix the appropriate indicator label supplied in the hardware pack to the data plate.

4. Slacken the screw in the burner pressure test point (B) and connect a gas pressure gauge via a flexible tube.

5. Switch the electricity supply ON and check that all external controls are calling for heat.

6. Set the boiler thermostat knob (G) to position 6. The fan will start. After the fan has run for a few seconds the pilot solenoid valve should open and the intermittent spark commence, continuing until the pilot is established. The main burner will then cross-light smoothly. If this sequence does not occur, refer to the Fault Finding section.

7. Test for gas soundness around ALL boiler gas components using leak detection fluid.

8. Operate the boiler for 10 minutes to stabilise the burner temperature.

9. The boiler is preset at the factory to its highest nominal rating but can be range rated to suit the system design requirements. Refer to Table 2 (page 3). Remove the sealing cap and turn the adjusting screw clockwise to increase/anticlockwise to decrease the pressure until the required burner pressure is achieved.
   Refit the sealing cap.

10. Set the boiler mains on/off switch to OFF.

11. Remove the pressure gauge and tube. Retighten the sealing screw in the pressure test point.

12. Turn ON and check for gas soundness at the pressure test point.

13. Refit the lower front panel and secure with the 2 fixing screws.

54 GENERAL CHECKS

Make the following checks for correct operation:

1. Turn the boiler thermostat OFF and ON to check that the main burner is extinguished and relit in response.
2. Set the boiler thermostat knob to position 6 and operate the mains on/off switch. Check that the main burner lights and extinguishes in response.
3. Check that the programmer, if fitted, and all other system controls function correctly.

   Operate each control separately and check that the main burner or circulating pump (as the case may be) responds.
4. **Water circulation System**
   - **a.** With the system HOT, examine all water connections for soundness.
   - **b.** With the system still hot, turn off the gas, water and electricity supplies to the boiler and drain down, in order to complete the flushing process.
   - **c.** Refill and vent the system, clear all air locks and again check for water soundness.
   - **d.** Balance the system.
5. Finally, set the controls to the user's requirements, refit the lower front panel securing with the 2 fixing screws and close the controls door.

Thermostat Knob Setting	Flow Temperature °C	°F
2	60	140
3	66	150
4	71	160
5	77	170
6	82	180

Notes.

- *If an optional programmer kit is fitted refer to the separate Programmer Kit Installation Instructions and Programmer Kit User's Instructions.*
- *The temperatures quoted are approximate and vary between installations.*

WARNING. **The boiler must not be operated with the casing removed.**

55 HANDING OVER

After completing the installation and commissioning of the system the installer should hand over to the householder by the following actions:

1. Hand the User's Instructions to the householder and explain his or her responsibilities under the Gas Safety (Installation and Use) Regulations 1994, Amendments 1996 or rules in force.
2. Draw attention to the lighting instruction label affixed to the inside of the controls door.
3. Explain and demonstrate the lighting and shutting down procedures.
4. The operation of the boiler and the use and adjustment of ALL system controls should be fully explained to the householder, to ensure the greatest possible fuel economy consistent with household requirements of both heating and hot water consumption.

   Advise the User of the precautions necessary to prevent damage to the system and to the building in the event of the system remaining inoperative during frosty conditions.
5. Explain the function and the use of the boiler thermostat and external controls.
6. Explain and demonstrate the function of time and temperature controls, radiator valves etc., for the economic use of the system.
7. If an optional Programmer Kit is fitted then draw attention to the Programmer Kit User's Instructions and hand them to the householder.
8. **After installation, commissioning, and customer hand-over instructions please complete the benchmark appliance log book and leave this with the customer.**
9. Stress the importance of regular servicing by a CORGI registered installer and that a comprehensive service should be carried out AT LEAST ONCE A YEAR.

56 SCHEDULE

WARNING.
BEFORE SERVICING always turn OFF the gas supply at the gas service cock and switch OFF and DISCONNECT the electrical supply to the appliance.

To ensure the continued safe and efficient operation of the appliance it is recommended that it is checked at regular intervals and serviced as necessary. The frequency of servicing will depend upon the installation condition and usage but should be carried out at least annually .

It is the law that any service work must be carried out by a CORGI registered installer.

a. Light the boiler and carry out a pre-service check, noting any operational faults.

b. Operate the boiler for at least 20 minutes. Check the gas consumption.

c. Connect a suitable gas analyser to the sampling point on the flue collector. Refer to Frame 60.

For correct operation the CO/CO_2 content of the flue gas should not be greater than 0.004 ratio. If this is the case and the gas input is within 95% of the nominal then no further action need be taken. If not the case, proceed to step (d)

d. Clean the main burner.

e. Clean the heat exchanger.

f. Clean the main injectors.

g. Check that the flue terminal is unobstructed and that the flue system is sealed correctly.

h. If the appliance has been installed in a compartment, check that the ventilation areas are clear.

The servicing procedures are covered more fully in Frames 58 to 62 and MUST be carried out in sequence.

Note. *In order to carry out either servicing or replacement of components, the boiler casing must removed. Refer to Frame 57.*

IMPORTANT. After completing the servicing or exchange of components always test for gas soundness and carry out functional checks as appropriate.
When the work is complete the casing MUST be correctly refitted and secured.

The boiler must NOT be operated if the casing is not fitted.

57 BOILER CASING REMOVAL

1. Remove the 2 screws and lift off the lower front panel.

2. Remove the 2 screws and lift off the grille assembly.

3. Disconnect the electrical leads from the gas valve.

4. Disconnect the inline connector on the PCB box lead.

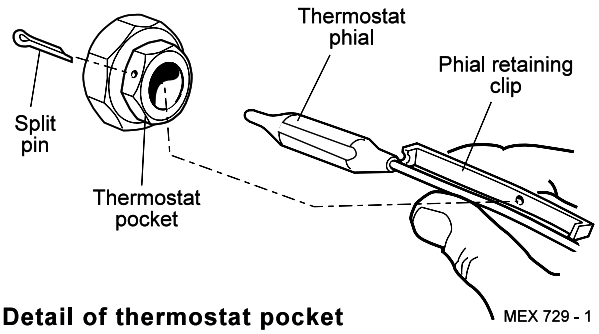

Detail of thermostat pocket

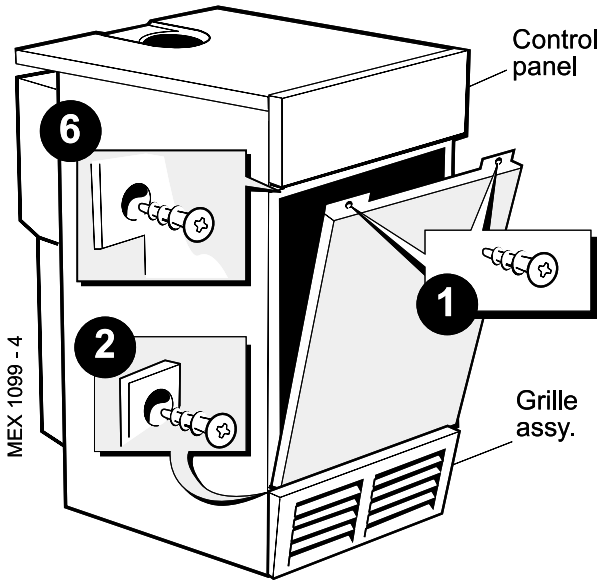

5. Remove the thermostat phial from the pocket as shown.

6. Remove the 2 screws securing the control panel and pull down to release the tabs from under the top panel.

7. If the boiler is not fitted under a work top, access for flue cleaning will be improved by removing the top panel.

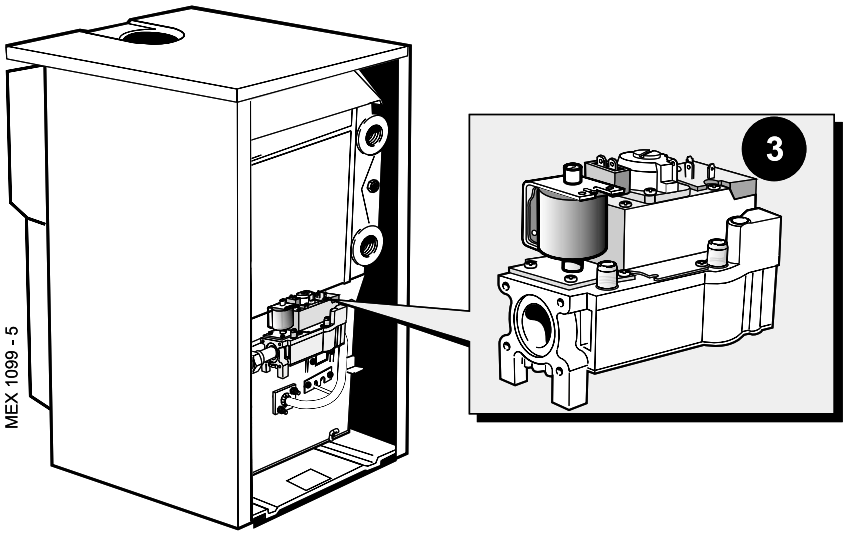

58 BURNER AND CONTROLS ASSEMBLY REMOVAL

1. Remove the 2 screws and lift off the lower front panel. Refer to Frame 57.
2. Remove the grille assembly. Undo the gas cock union.
3. Disconnect the ignition lead from the PCB.
4. Remove the 4 wing nuts and withdraw the burner and controls assembly, complete, from the boiler.
5. Place on a convenient working surface.

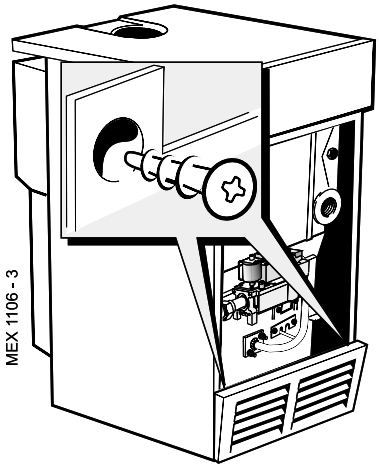

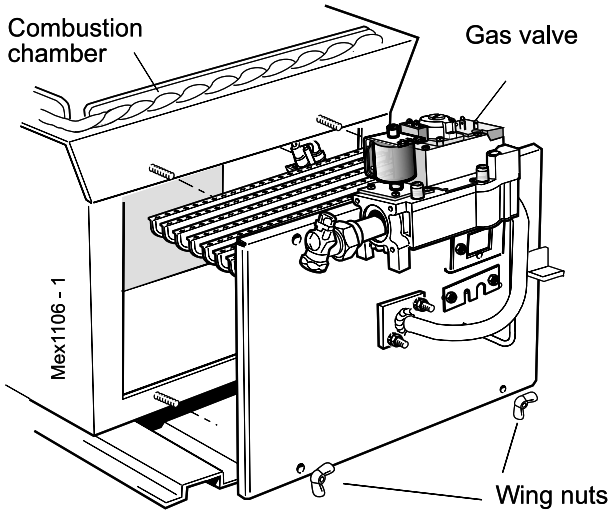

59 CLEANING THE BURNER/PILOT ASSEMBLY

1. Brush off any deposits that may have fallen onto the burner head (ensuring that the flame ports are unobstructed) and remove any debris that may have collected.

   Note. *Brushes with metallic bristles MUST NOT be used.*
2. Remove the main burner injector. Check, clean or replace, as required.
3. Refit the injector, using an approved jointing compound.
4. Inspect the pilot burner and ignition/detection electrode; ensure they are clear and in good condition.

   Check that:
   - **a.** The pilot burner is clean and unobstructed.
   - **b.** The ignition/detection electrode is clean and undamaged.
   - **c.** The ignition/detection lead is in good condition and securely connected.
   - **d.** The spark gap is correct. Refer to Frame 69.
   - **e.** The position of the ignition/detection electrode relative to the pilot burner is correct. Refer to Frame 69.
5. Clean or renew components as necessary.

60 CLEANING THE FAN/FLUE WAYS

1. Remove the silicon rubber tube from the fan sensing point.
2. Disconnect the fan leads.
3. Remove the M4 screw securing the flue connector to the fan.
4. Slacken the M4 screw securing the flue connector to the turret front panel.
5. Disconnect the silicon rubber tube from the top of the collector hood.
6. Remove the 4 M4 screws on the top of the collector hood and by sliding it forwards remove collector hood/fan assembly.
7. Check that the fan impellor runs freely. Remove any debris from the impellor with a soft brush.
8. Remove the flue baffles.
9. Remove all loose deposits from the heat exchanger, particularly between the fins, using a suitable brush.
10. Re-assemble in reverse order. Lubricate fan 'O' ring with silicon grease. Ensure the fan leads and 2 sensing tubes are reconnected.

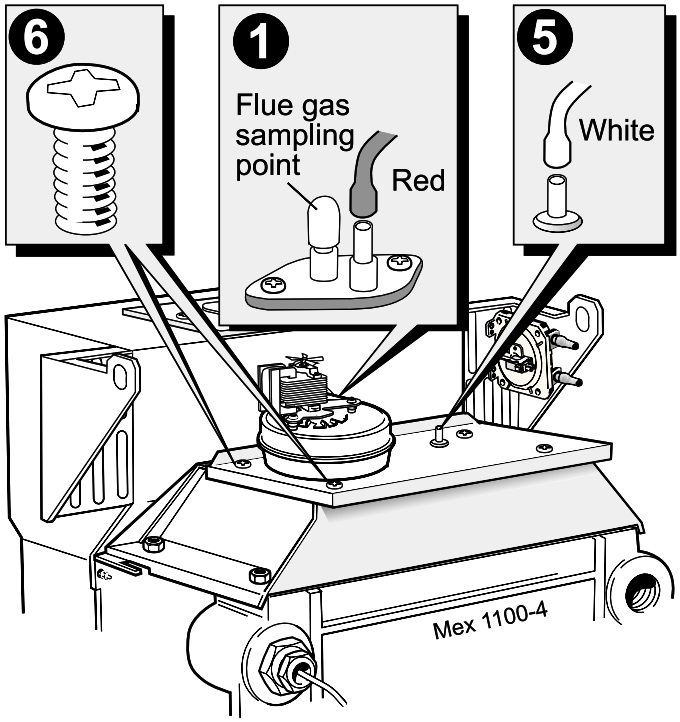

61 RE-ASSEMBLY

Re-assemble the boiler in the following order.

1. Refit the flue baffles.
2. Inspect the collector hood rope gasket and replace, if necessary, ensuring that the self adhesive rope is fitted centrally on to the lip of the collector hood / fan assembly. The boiler efficiency will be adversely affected if incorrectly fitted. Refit the collector hood cover with the 4 screws. Tighten the screws. Ensure that the sealing gasket is compressed. Refit the pressure pipe.
3. Refit the positive pressure tubes on the top of the fan housing. Reconnect the electrical leads.
4. Refit the burner assembly.
5. Reconnect the gas supply and the electrical wiring. Refer to Frames 39 & 43.
7. Check for gas soundness. Check the gas service cock and pressure test point.
8. Refit the boiler casing (Refer to Frame 51).
9. Refit the lower front panel and secure with the 2 fixing screws.

62 GAS PRESSURE ADJUSTMENT

1. **Pilot Pressure**

   Pilot adjustment is factory set to maximum and no adjustment is possible.

2. **Main Burner Pressure**

   After servicing, reference should be made to Table 1, which quotes details of the rated output with the related burner pressure and heat input. Any required adjustments should be made using the pressure adjustment screw. Refer to Frame 53, 'Initial Lighting.

   Refit the lower front panel and secure with the 2 fixing screws.

REPLACEMENT OF PARTS

63 GENERAL

When replacing any component:

1. Isolate the electricity supply.
2. Turn OFF the gas supply.
3. Remove the lower front panel and grille assembly.

Note. *In order to assist fault finding, the control box printed circuit board is fitted with 2 indicator lights which represent the following boiler conditions:*

Neon I3. Mains electricity ON.

Neon SG1. Flashes to indicate ignition operation (stops after detection).

The boiler MUST NOT be operated if the casing is not fitted.

64 SIGHTGLASS REPLACEMENT

1. Unfasten the 2 M5 hexagon nuts and washers. Remove the assembly from the front plate.
2. Fit the new sightglass and re-assemble, as shown.
3. Retighten the 2 M5 hexagon nuts to ensure an airtight seal. *Do NOT overtighten.*

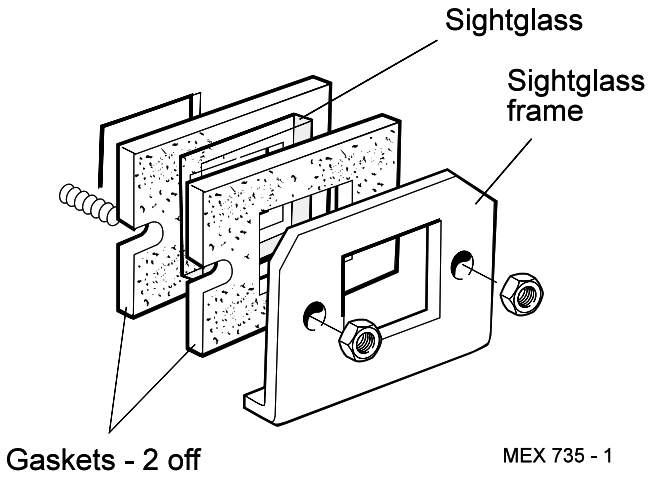

65 PILOT BURNER REPLACEMENT

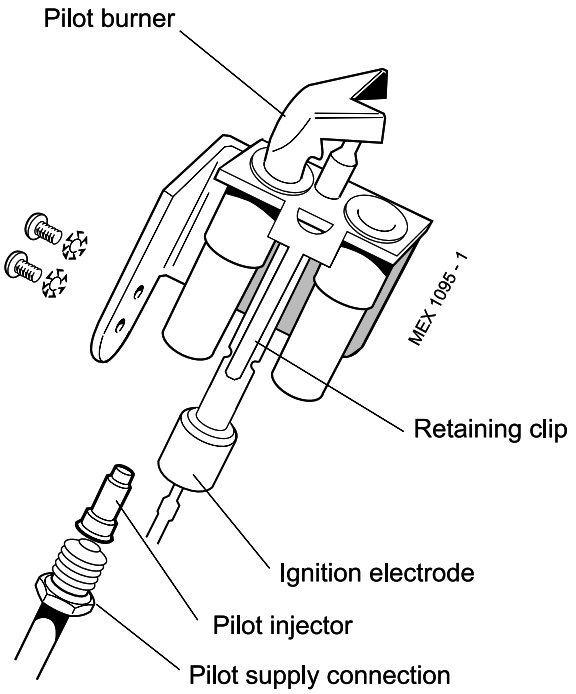

1. Remove the 2 screws and lift off the lower front panel then remove the grille assembly. Refer to Frames 57.
   Undo the gas cock union. Remove the 4 wing nuts and withdraw the burner and controls assembly, complete, from the boiler.
2. Disconnect the ignition lead from the PCB.
3. Prise the retaining clip out of the groove in the electrode, using a small screwdriver, and withdraw the electrode - refer to Frame 69.
4. Undo the pilot supply pipe connection and ease clear of the pilot burner. DO NOT lose the pilot injector, which is a push-fit in the pilot burner housing.
5. Remove the 2 securing screws and washers, and withdraw the pilot burner.
6. Fit the new pilot burner and re-assemble in reverse order, ensuring that:
   - **a.** The injector is in position when refitting the pilot supply.
   - **b.** A gas-tight joint is made.
   - **c.** The spark gap is correct. Refer to Frame 69.

66 CONTROL THERMOSTAT REPLACEMENT

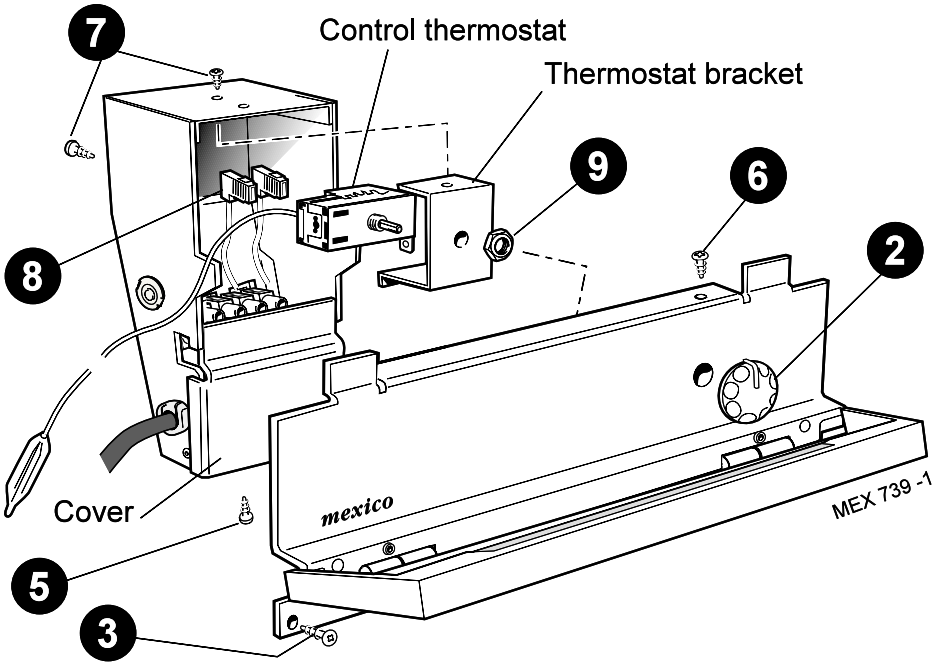

1. Remove the 2 screws and lift off the lower front panel. Refer to Frame 57.
2. Pull off the thermostat knob.
3. Remove the 2 screws and pull down the control panel tabs clear of the top panel.
4. Remove the thermostat phial from the pocket. Refer to Frame 57.
5. Remove the bottom screw and remove the cover.
6. Remove the top screw and ease the control box off the control panel.
7. Remove the 2 screws to release the thermostat bracket.
8. Disconnect the electrical leads.
9. Unscrew the thermostat nut to withdraw the thermostat.
10. Fit the new thermostat and re-assemble in reverse order.

67 CONTROLS PANEL REPLACEMENT

1. Remove the 2 screws and lift off the lower front panel. Refer Frame 57.
2. Pull off the thermostat knob.
3. Disconnect the inline electrical connector between the control box and PCB box.
4. Unscrew the 2 screws and pull down the control panel so that the 2 tabs clear the top panel.
5. Remove the thermostat phial from the pocket. Refer to Frame 57.
6. Remove the bottom screw and remove the cover from the control box.
7. Remove the top screw and ease the control box off the control panel.
8. Disconnect the mains electrical supply from the terminal strip and release from its clamp.
9. Assemble new control box and panel and fit to the casing in reverse order.
10. Insert control thermostat phial into pocket and secure with the split pin.
11. Refit the inline electrical connector between the control box and the PCB box.
12. Remove control box cover and make electrical supply connections to the terminal strip. Refer to Frame 46.
13. Replace the lower front panel and secure with the 2 fixing screws.
14. Check the operation of the boiler.

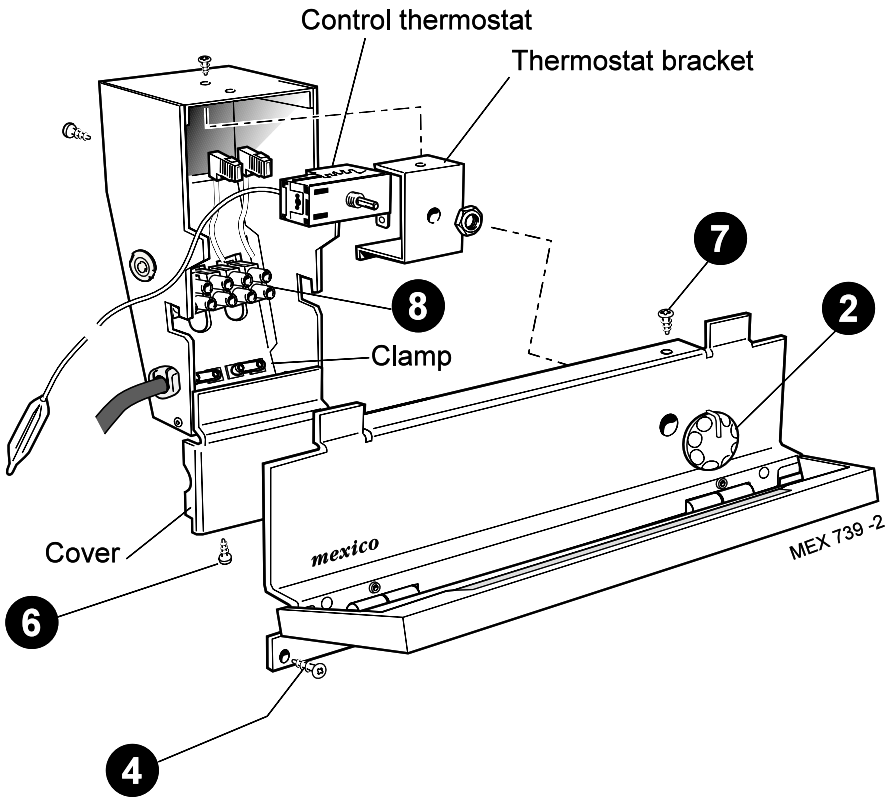

68 OVERHEAT THERMOSTAT REPLACEMENT (if fitted)

1. Remove the 2 screws and lift off the lower front panel. Refer to Frame 57.
2. Slacken the screw at the thermostat pocket and withdraw the phial from the pocket.
3. Remove the thermostat retaining nut and withdraw the thermostat from the control panel.
4. Transfer the electrical leads from the old thermostat to the replacement (polarity is not important).
5. Fit the new thermostat ensuring that the alignment peg on the thermostat sits in the small hole adjacent to the main fixing hole and reassemble in reverse order.
6. Replace the lower front panel and secure with the 2 fixing screws.
7. Check the operation of the boiler.

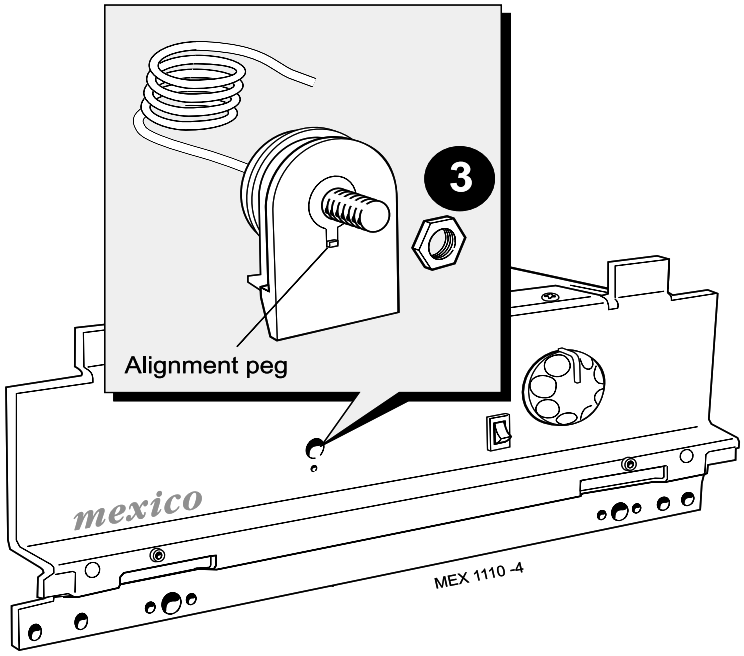

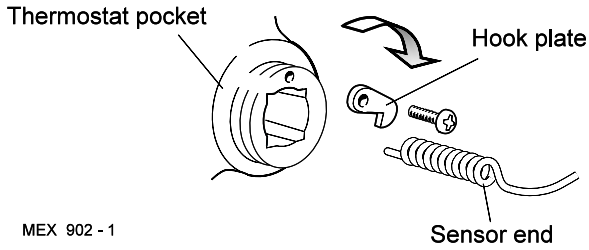

69 IGNITION ELECTRODE AND LEAD REPLACEMENT

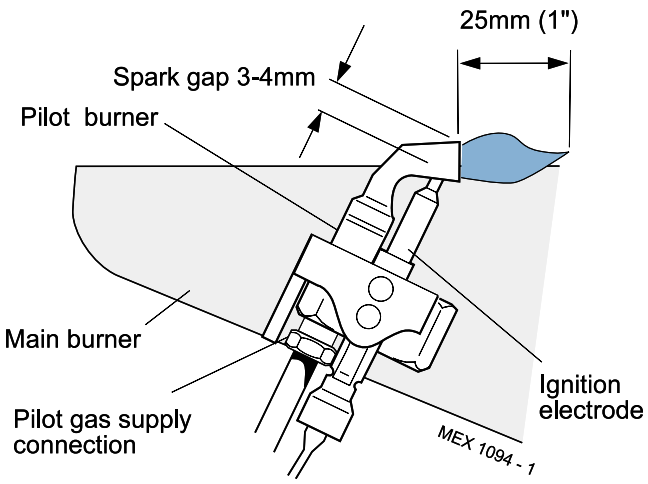

Detail of pilot flame length and spark gap

1. Remove the 2 screws and lift off the lower front panel then remove the grille assembly - refer to Frame 57. Undo the gas cock union. Remove the 4 wing nuts and withdraw the burner and controls assembly, complete, from the boiler.
2. Disconnect the ignition lead from the PCB.
3. Prise the retaining clip out of the groove in the electrode, using a small screwdriver, and withdraw the electrode.
4. Push in the new electrode until the retaining clip locates in the groove and re-assemble in reverse order.

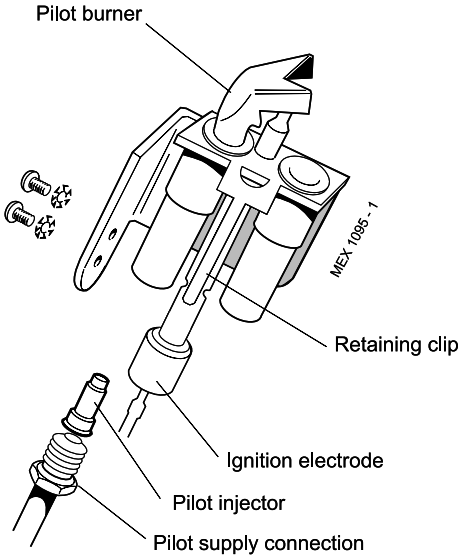

70 MAIN BURNER REPLACEMENT

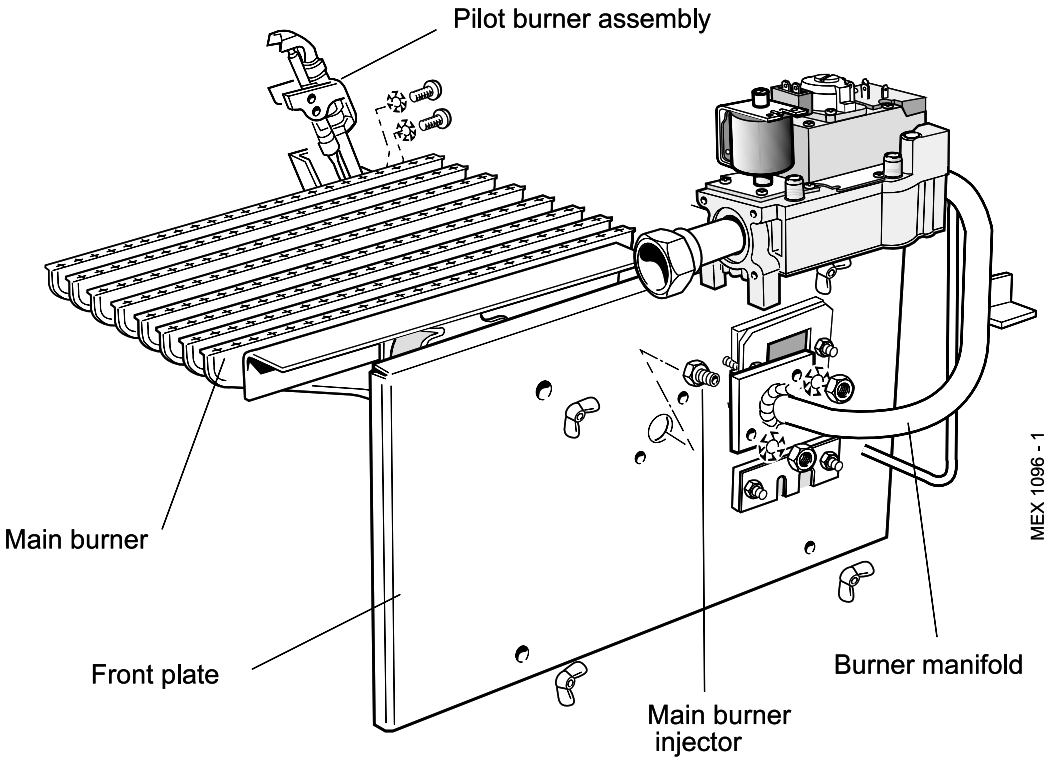

1. Remove the 2 screws and lift off the lower front panel then remove the grille assembly. Refer to Frame 57.
   Undo the gas cock union. Remove the 4 wing nuts and withdraw the burner and controls assembly, complete, from the boiler.
2. Disconnect the ignition lead from the PCB.
3. Remove the 2 screws securing the pilot burner and pull the assembly clear of the main burner.
4. Remove the 2 nuts and washers securing the burner to the front plate and manifold. Withdraw the burner.
5. Fit the new burner and re-assemble in reverse order, taking care not to damage the main burner injector which is screwed into the burner manifold.

71 MAIN BURNER INJECTOR REPLACEMENT

1. Remove the 2 screws and lift off the lower front panel then remove the grille assembly. Refer to Frame 57.
   Undo the gas cock union. Remove the 4 wing nuts and withdraw the burner and controls assembly, complete, from the boiler.
2. Disconnect the ignition lead from the PCB.
3. Undo the pilot supply connection.
4. Undo the manifold securing nuts and remove the manifold from the front plate.
5. Unscrew the burner injector from the manifold.
6. Fit the new injector, using an approved jointing compound, and re-assemble in reverse order.

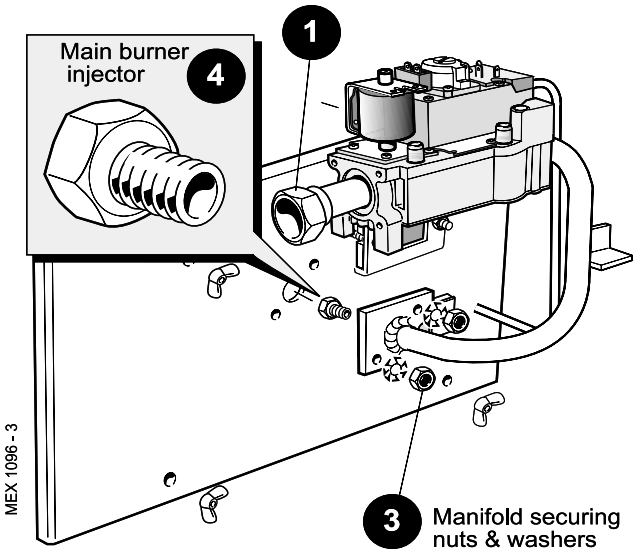

72 GAS VALVE REPLACEMENT

1. Remove the 2 screws and lift off the lower front panel then remove the grille assembly - refer to Frame 57.
   Undo the gas cock union. Remove the 4 wing nuts and withdraw the burner and controls assembly, complete, from the boiler.
2. Disconnect the ignition lead from the PCB.
3. Undo the pilot supply connection.
4. Unscrew the gas inlet pipe from the valve.
5. Remove the 4 securing screws and withdraw the valve from the burner manifold.
6. Fit the new gas valve, ensuring that:
   a. The valve is fitted the correct way round - an arrow engraved on the valve indicates the direction of flow.
   b. The sealing 'O' ring supplied with the valve is correctly fitted at the outlet flange.
   c. An approved jointing compound is used when reconnecting the gas inlet pipe.

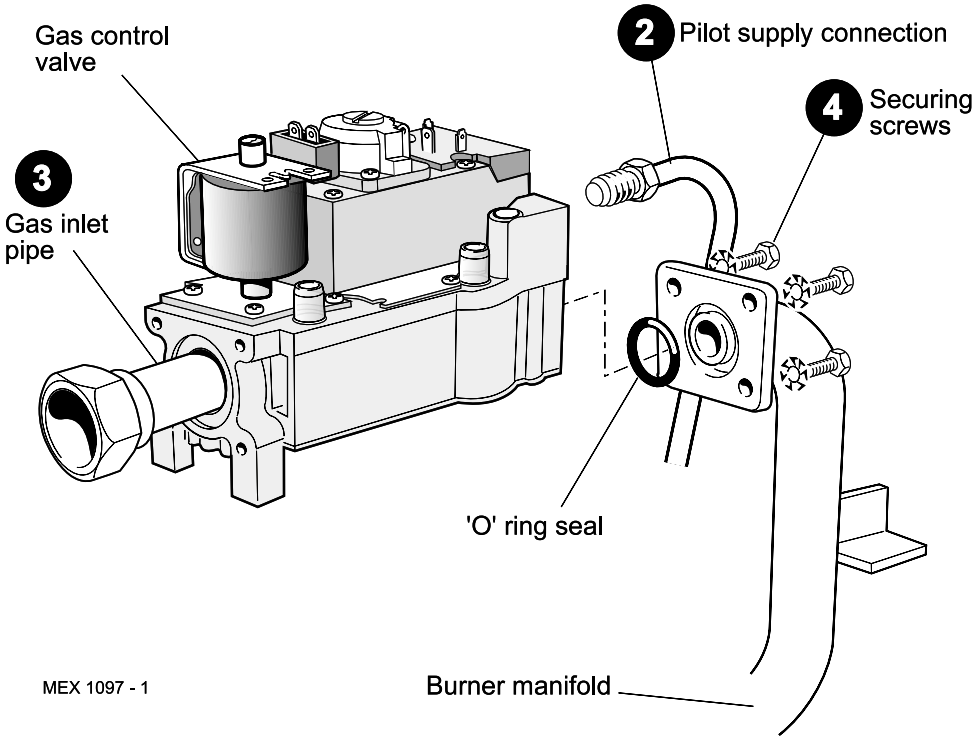

73 FAN REPLACEMENT

1. Remove the lower front panel, control panel and top panel -refer to Frame 57.
2. Remove the silicon rubber tube from the fan sensing point.
3. Disconnect the fan leads.
4. Remove the M4 screw securing the flue connector to the fan.
5. Slacken the 2 M4 screws securing the flue connector to the turret front panel.
6. Disconnect the silicon rubber tube from the top of the collector hood.
7. Remove the 4 M4 screws on the top of the collector hood and by sliding it forwards remove collector hood / fan assembly.
8. Remove the three M4 screws retaining the fan to the collector hood.
9. Re-assemble in reverse order. Lubricate the fan 'O' ring with silicon grease. Ensure the fan leads and 2 sensing tubes are reconnected.
10. Refit the boiler casing.
11. Check the boiler operation.

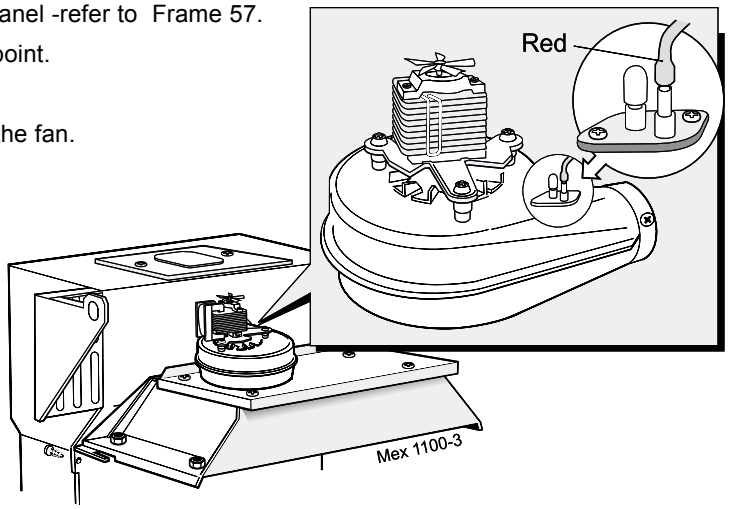

74 AIR PRESSURE SWITCH (APS) REPLACEMENT

1. Remove the lower front panel, control panel and the top panel -refer to Frame 57.
2. Remove the APS fixing screw.
3. Remove both sensing tubes from the APS.
4. Remove the 3 electrical connections from the APS.
5. Connect the new APS in reverse order.
6. Refit the APS with the fixing screw.
7. Refit the boiler casing.
8. Check the boiler operation.

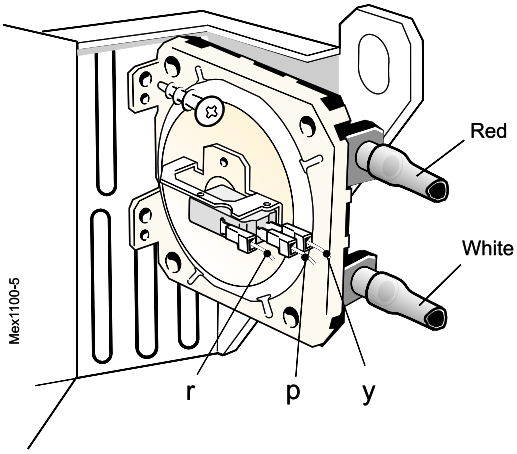

75 PRINTED CIRCUIT BOARD (PCB) REPLACEMENT

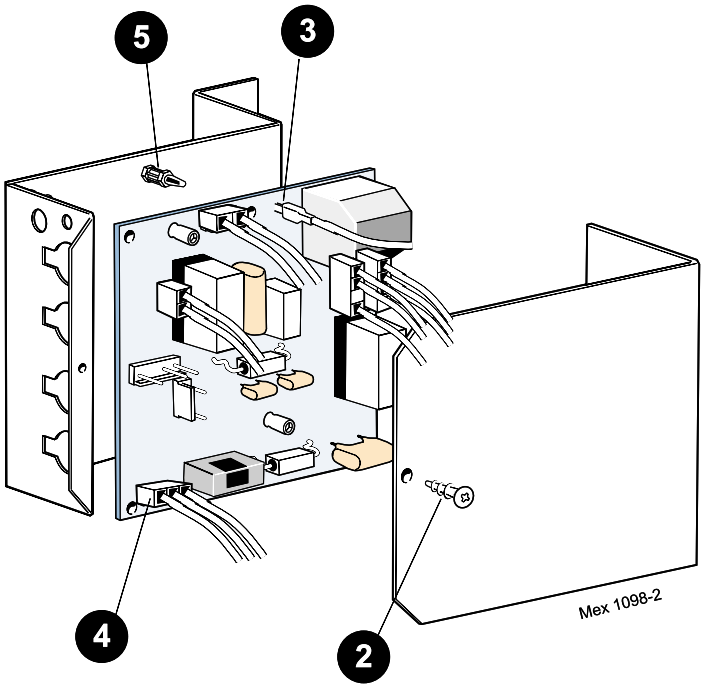

1. Remove the 2 screws and lift off the lower front panel - refer to Frame 57.
2. Undo the PCB cover fixing screw and remove the cover.
3. Remove the HT lead from the PCB.
4. Remove the 6 push-in connectors from the PCB.
5. Compress the barbs on the PCB stand-offs to release the PCB from the box
6. Fit the new PCB and re-assemble in reverse order.
7. Refit the boiler casing.
8. Check the operation of the boiler.

FAULT FINDING

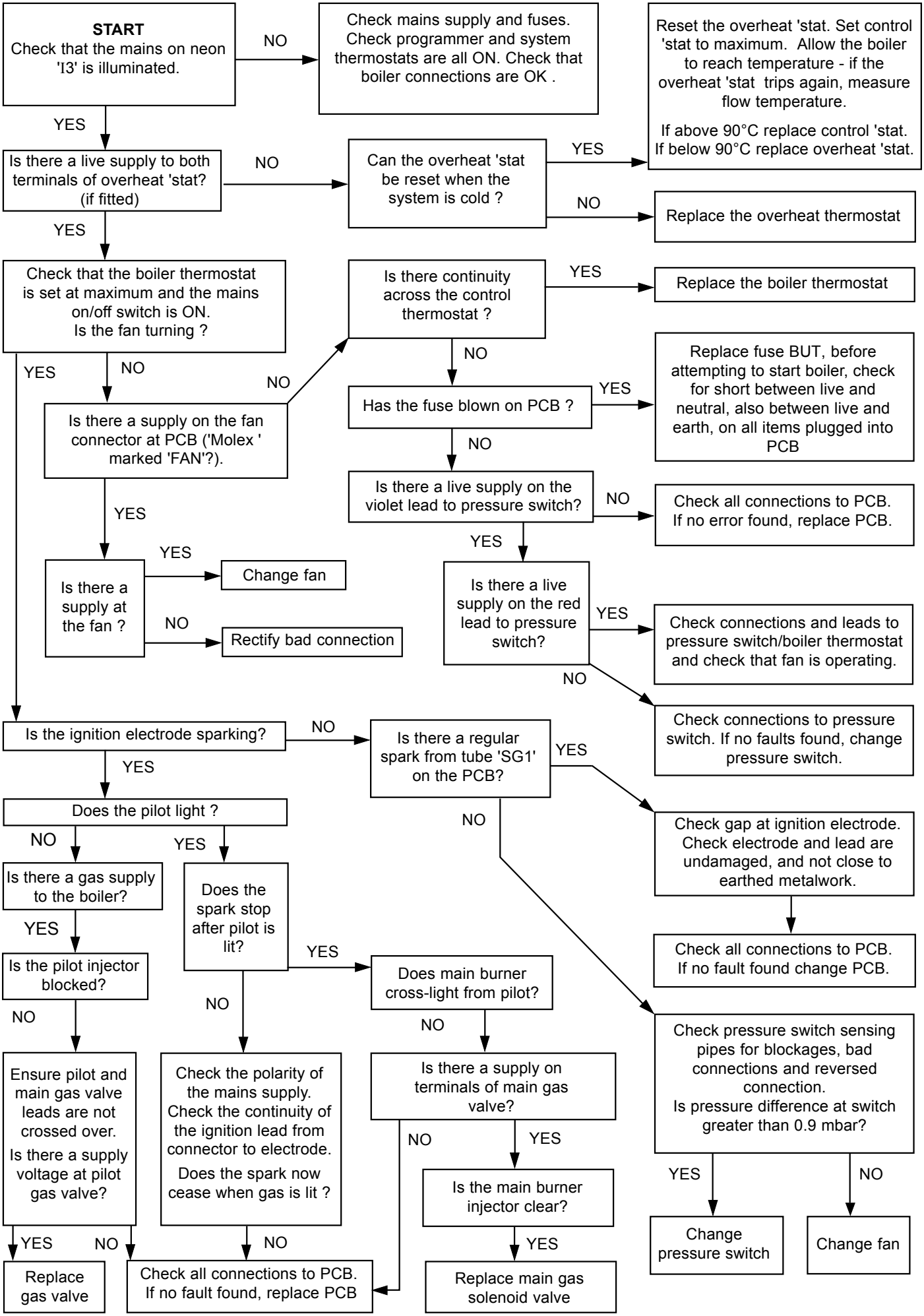

SHORT LIST OF PARTS

The following are parts commonly required as replacement components, due to damage or expendability. Their failure or absence is likely to affect safety or performance of this appliance.

The list is extracted from the British Gas List of Parts, which contains all available spare parts.

The full list is held by British Gas, **Caradon Plumbing Limited** distributors and merchants.

When ordering spares please quote:

1. Boiler model
2. Appliance G.C. number
3. Description
4. Quantity
5. Product no.

Key No.	G.C. Part No.	Description		Qty.	Product No.
14		Fan assembly:	40-50-60-70-80 FF	1	079888
17	319 494	Sightglass assembly		1	079 334
20		Main burner:			
	385 876	AEROMATIC No. AC 19/123 266;	40 FF	1	113 187
	385 877	AEROMATIC No. AC 19/123 267;	50 FF & 60 FF	1	113 188
	382 957	AEROMATIC No. AC 19/123 244;	70 FF & 80 FF	1	013 857
21		Main injector:			
	398 051	BRAY Cat. 10 - size 1200;	40 FF	1	004 190
	398 055	BRAY Cat. 10 - size 1400;	50 FF	1	003 361
	398 059	BRAY Cat. 10 - size 1700;	60 FF	1	004 305
	398 064	BRAY Cat. 10 - size 2200;	70 FF	1	004 049
	398 065	BRAY Cat. 10 - size 2300;	80 FF	1	004 760
22	E01-505	Pilot burner / injector / fittings:			
		HONEYWELL Q 385 A 2036;		1	075 291
23	381 656	Pilot injector: HONEYWELL 4500 4108 001		1	003 825
24		Gas valve assembly:			
		VR 4601AA 1010 and 'O'ring	40-50-60-70-80 FF	1	170 663
26	386 575	Ignition electrode: HONEYWELL 45900413-004		1	151 079
27		HT lead: 900 mm	40-50-60-70-80 FF	1	058826
30		PCB sub assembly		1	170 665
38		Pressure switch: HONEYWELL C6065F1316B		1	152427
49		Flue baffle kit	40 FF	2	079890
			50 FF, 60 FF	4	079891
			70 FF, 80 FF	4	079890
66		Thermostat - RANCO K36 - P1354		1	151 903
67	308 557	Thermostat knob		1	111 904

76 SHORT PARTS

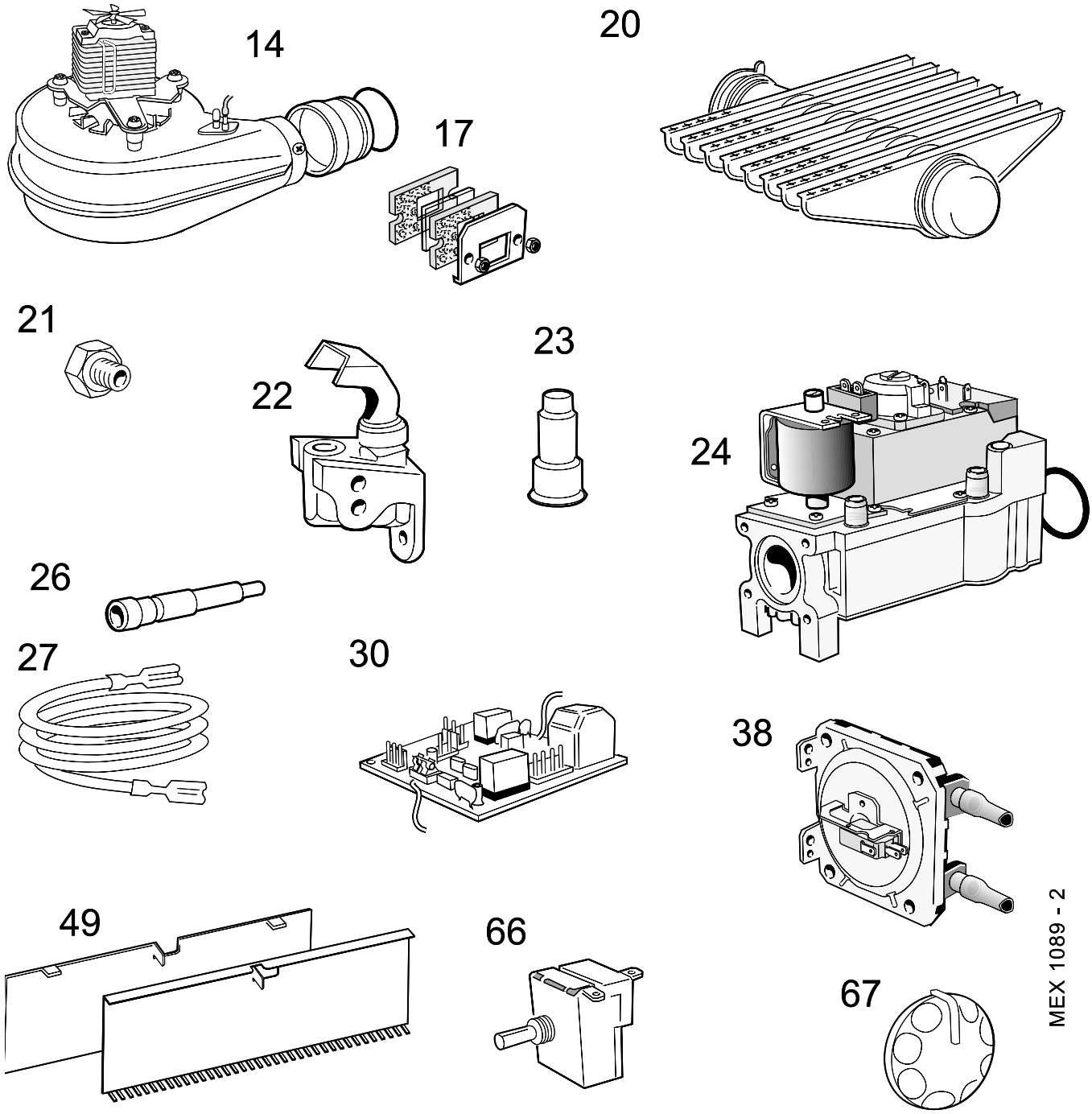

77 BOILER CONTROL PANEL - Exploded View

Legend.

63. Control panel complete assy.
65. Control box assy.
66. Control thermostat.
67. Control thermostat knob.
71. Control front panel (door).
72. Magnetic strip.

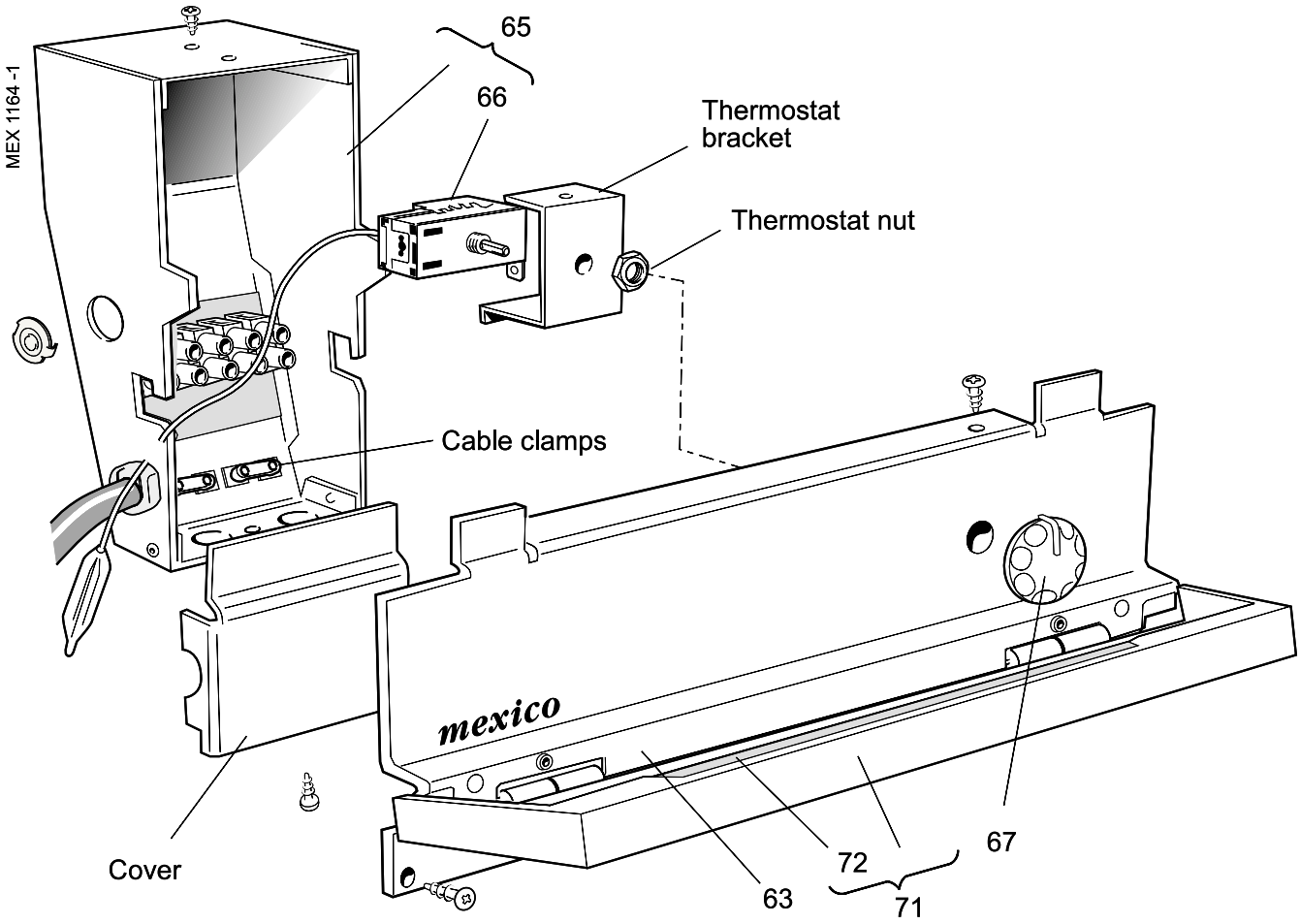

78 PCB BOX - Exploded View

Legend.

29. PCB Chassis assembly.

30. PCB sub-assembly.

34. PCB support

37. PCB cover.

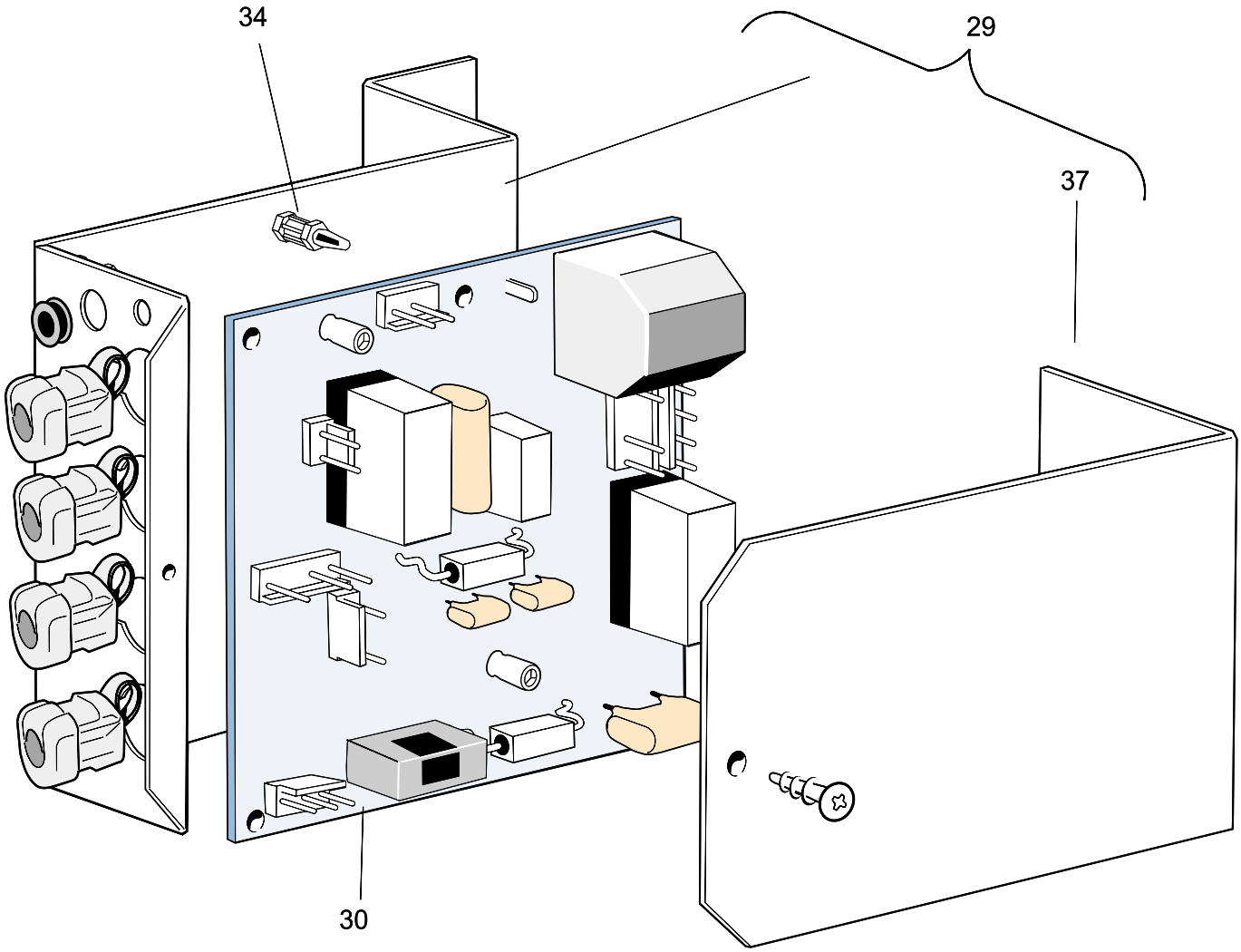

Mex 1098-1

79 BURNER AND CONTROLS ASSEMBLY - Exploded View

Legend.

16. Front plate assy.
17. Sightglass assy.
18. Burner manifold.
19. Pilot pipe.
20. Main burner.
21. Main injector.
22. Pilot burner.
24. Gas valve.
25. 'O' ring.
26. Ignition electrode.
27. Ignition lead.
28. Gas cock.
50. Sealing gasket.
51. Sealing plate.

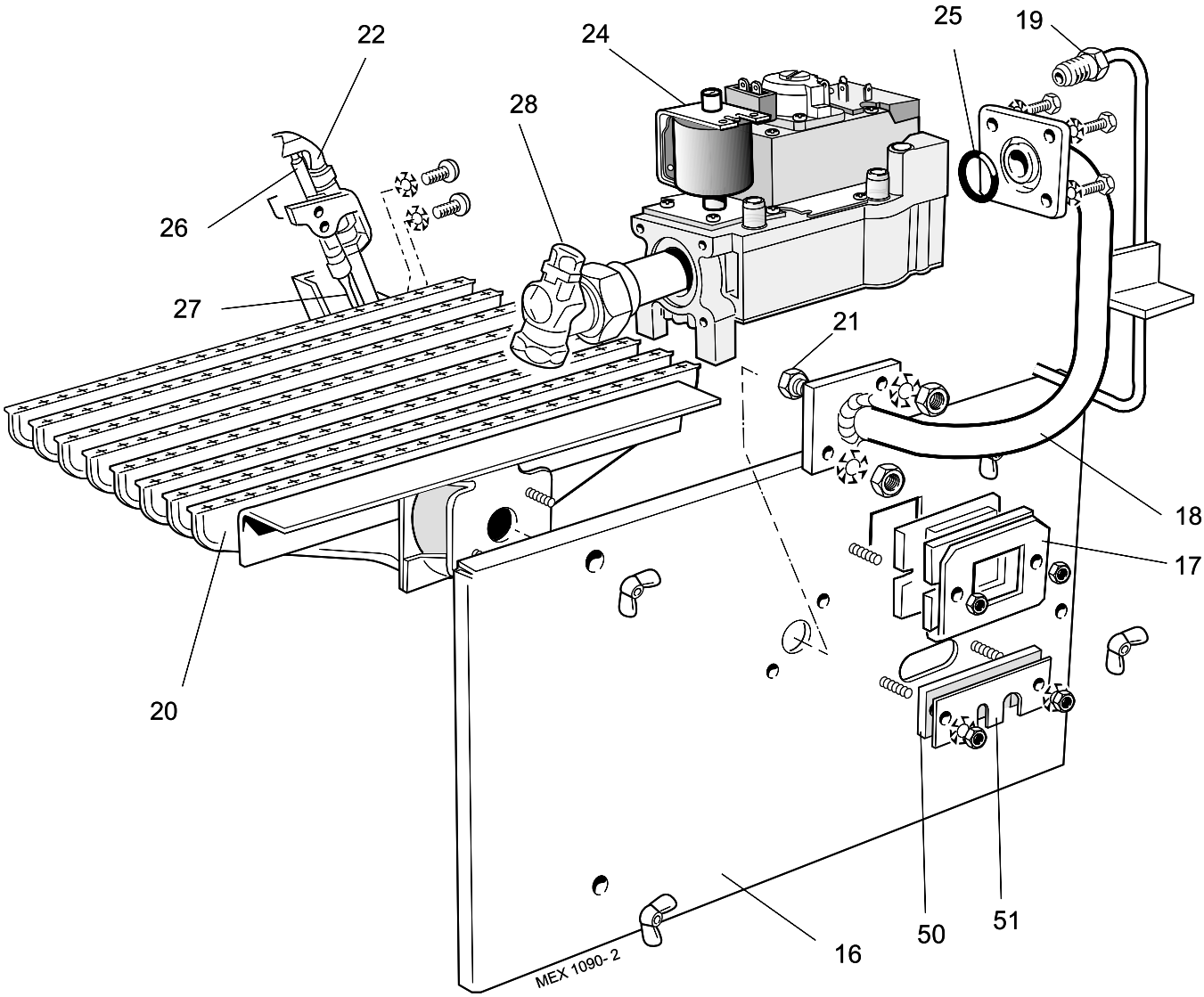

80 BOILER CASING ASSEMBLY

Legend.

46. Baseplate.
62. Casing complete.
63. Controls panel complete.
71. Controls front panel (door)
73. Side panel - LH
74. Side panel - RH
75. Lower front panel.
76. Top panel.
77. Grille assy.

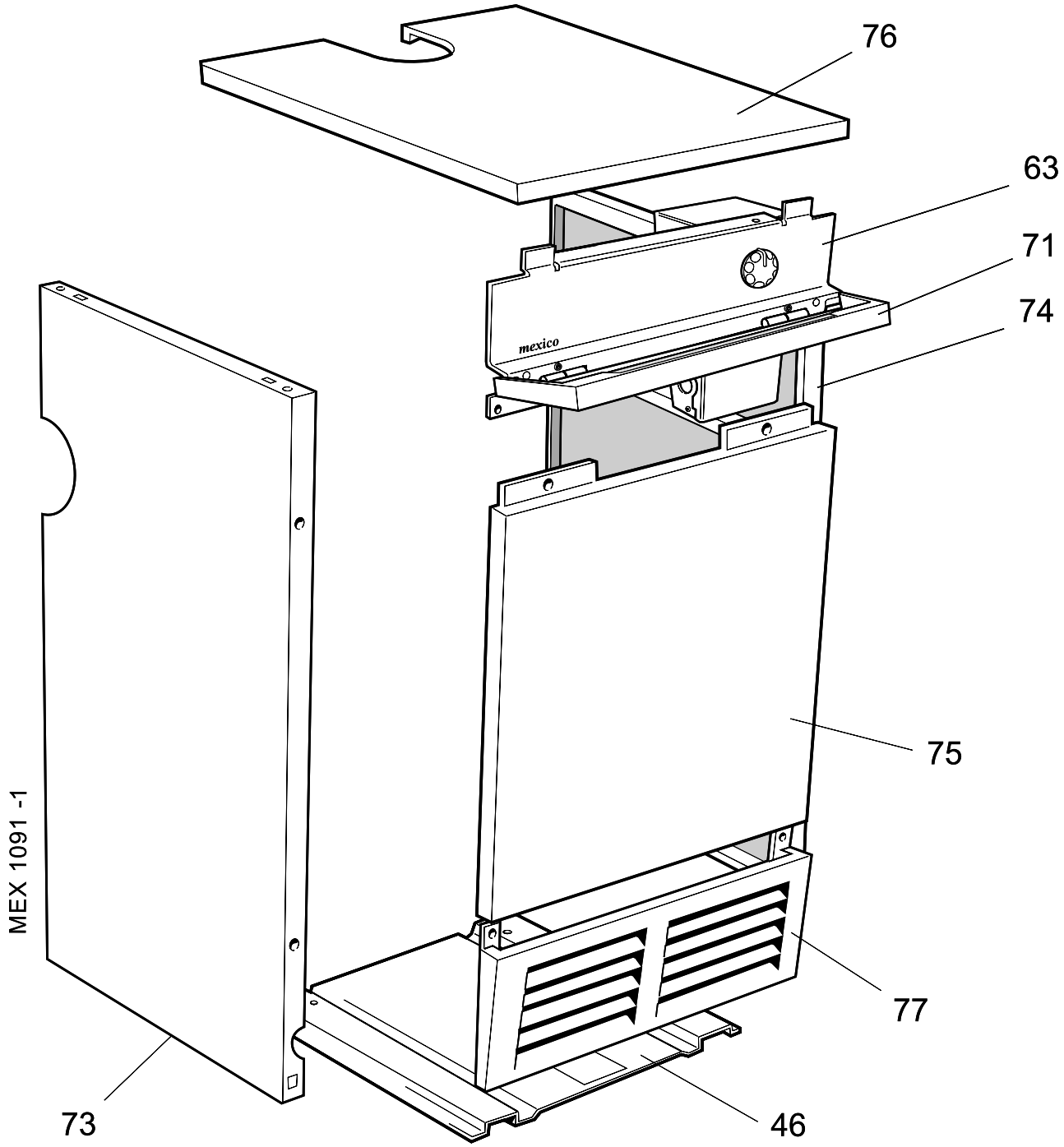

THIS SYMBOL IS YOUR ASSURANCE OF QUALITY

These appliances are designed for use with Natural Gas only. They have been tested and conform with the provisions of BS. 6332 and BS. 5258.

The code of practice for the installation, commissioning & servicing of central heating systems

CERTIFIED PRODUCT
Manufactured under a BS EN ISO 9001: 1994 Quality System accepted by BSI

Technical Training

The Caradon Plumbing Technical Training Centre offers a series of first class training courses for domestic, commercial and industrial heating installers, engineers and system specifiers. For details of courses please ring:
..... 01270 413624

Caradon Plumbing Ltd. pursues a policy of continuing improvement in the design and performance of its products. The right is therefore reserved to vary specification without notice.

January 2000 UIN 153 419 A03

Caradon Plumbing Ltd., P.O. Box 103, National Ave, Kingston upon Hull, HU5 4JN. Telephone: 01482 492 251 Fax: 01482 448 858. Registration No. London 322 137. Registered Office: National Avenue, Kingston upon Hull, HU5 4JN. *A subsidiary of Caradon p.l.c*

Ideal Installer/Technical Helpline: 01482 498663

YOUR FEEDBACK

and your chance to win a free boiler

At Ideal we've been leaders in the design and engineering of robust and reliable boilers for over 90 years. We want to continue as leaders by listening to your suggestions for how to improve our boilers and our service. We will be giving away a free boiler for the five best ideas every year (to be selected by our Technical Director). Please complete this form, using extra sheets if required, and post it or fax it to us on 01482 498699.

Boiler details

Model / Size *(e.g. Classic RS 230, Mexico CF 3/60 etc. Details on control panel door)*

Date of Installation

Installer details

Name

Address

Post Code

Telephone (*Please include STD code*)

How I would improve this boiler:

My general comments for Ideal:

Caradon
Plumbing Solutions

Ideal Installer/Technical Helpline: 01482 498663

Further information

If you would like information about Ideal Boilers please complete this sheet and fax it to us on 01482 498699 or post it to Caradon Plumbing Limited, PO Box 103, National Avenue, Kingston upon Hull, HU5 4JN.

Installer details

Name

Address

Post Code

Telephone (*Please include STD code*)

General information required

- ☐ *Please send me details of Ideal Training Courses.*
- ☐ *Please arrange for a technical representative to contact me.*
- ☐ *Please arrange for me to join an Ideal factory tour.*

Range guides required

- ☐ *The Ideal Guide: a specifier's and installer's introduction to the Ideal domestic boiler range.*
- ☐ *The Ideal Householders Guide: to assist the installer when presenting to his/her customers.*

Technical manuals required

- ☐ *The Ideal C class combi boiler*
- ☐ *The Ideal Classic wall hung boiler*
- ☐ *The Ideal Classic System wall hung boiler*
- ☐ *The Ideal Classic LX Deluxe wall hung boiler*
- ☐ *The Ideal Mexico floor standing boiler*
- ☐ *The Ideal Minimiser heat-saving boiler*
- ☐ *The Ideal Response combi boiler*
- ☐ *The Ideal Response SE super efficiency combi boiler*
- ☐ *The Ideal Systemiser SE super efficiency system boiler*
- ☐ *The Ideal Concord high output boiler*
- ☐ *The Ideal Buccaneer oil fired boiler*

Caradon
Plumbing Solutions

Caradon Plumbing Ltd, PO Box 103, National Avenue, Kingston upon Hull, HU5 4JN. Telephone: 01482 492251 Fax: 01482 448858.

Ideal Installer/Technical Helpline: 01482 498663

U.I.N. 153419 A0