THE IDEAL INSTALLATION & SERVICING MANUAL

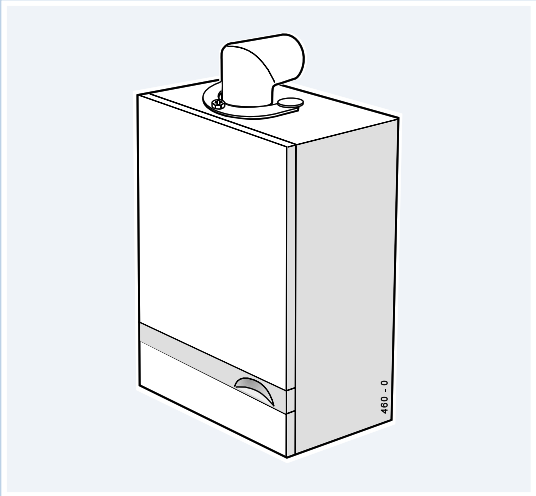

response

the combi boiler

Wall mounted, gas fired, fanned flue combination boiler

Response FF80

Ideal BOILERS

Installers guide to domestic central heating boilers

Response: The combi boiler

The Ideal Response is a wall mounted, fanned flue combination boiler which serves a home's central heating system and delivers instant hot water on demand. It has been designed to be 'friendly' to the user, installer and service engineer.

Response: The fit anywhere combi

Simple fanned 'go anywhere' flue

The Response's flue turret simply rotates through 360° to allow horizontal outlet in any direction. Options include horizontal flue length extensions or simple vertical flue kits - and the flue is self-sealing, eliminating the need for outside assembly - an important benefit in high-rise applications.

Downward or upward connections...

Water and gas connections have been designed to be as simple and fast as possible. The Ideal Response comes complete with a rugged mounting frame which can accommodate downward or upward routed gas, water and electrical connections before the boiler is fitted.

...and it fits inside a cupboard

Its compact size - up to half that of other combis - makes the Response ideal for any kitchen. It can be installed inside a standard size kitchen wall unit without insulation and with minimal ventilation or it can be mounted to sit flush with the front face of adjacent kitchen units.

Response: The combi you can rely on

The Response has been designed and developed with reliability as the number one priority. But even the finest engineered product may develop a fault at some stage in its lifetime. To support the Response we've created the Ideal Care Guarantee which sets out our target to repair any fault next day.

Free Guarantee: 1st Year Ideal Care

The home owner is entitled to 12 months free Ideal Care, which includes both parts and labour, to restore the boiler to full function. Please encourage the home owner to complete and return the registration form in their Householder's pack within 30 days of installation.

Optional Extra Year Cover with Ideal Care

You may wish to offer your own annual service plan or you may wish to advise the home owner to complete their application form for the appropriate level of extended Ideal Care - Silver, Gold or Platinum. Full details are available in the Ideal Care brochure.

Table 1 - General Data

Boiler			Response FF80
Gas supply type & connection			2H-G20-20mbar, Rc1/2
Inlet connection	Domestic Hot Water		15mm copper
Outlet connection	Domestic Hot Water		15mm copper
Flow connection & Return connection	Central heating		22 mm copper
Flue terminal diameter		mm (in.)	100 (4)
Max. working pressure (sealed systems)		bar (lb/in²)	2.65 (38.5)
Max. DHW water inlet pressure		bar (lb/in²)	10.0 (145.0)
Min. DHW water inlet pressure		bar (lb/in²)	0.5 (7)
Electrical supply & loading			230 V ~ 50 Hz, 160W max
External fuse rating			3A
Internal fuse rating			PCB 38 F1: T2A / PCB 38 F2: H2A / PCB 37 F1: H2A
Water content	Central Heating	litre (gal.)	2.3 (0.50)
	Domestic Hot Water	litre (gal.)	0.48 (0.11)
Dry Weight		kg (lb.)	50 (110)
Boiler size	Height	mm (in.)	640 (25 3/16)
	Width	mm (in.)	436 (17 1/8)
	Depth	mm (in.)	278 (10 15/16)

Table 2 - Performance Data - CENTRAL HEATING

		Response FF80	
		Max	Min
Burner pressure (HOT)	mbar (in.w.g.)	8.3 (3.4)	3.7 (1.5)
Input based on nett CV	kW (Btu/h)	19.8 (67 500)	12.6 (43 000)
Input based on gross CV	kW (Btu/h)	22 (75 000)	13.9 (47 500)
Output	kW (Btu/h)	17.6 (60 000)	11.7 (40 000)
Gas consumption (Hot)	l/s (ft³/h)	0.568 (220)	0.359 (139)

Table 3 - Performance Data - DOMESTIC HOT WATER

		Response FF80 (Maximum)
Burner pressure (HOT)	mbar (in.w.g.)	14.8 (5.9)
Input based on nett CV	kW (Btu/h)	26.4 (90 000)
Input based on gross CV	kW (Btu/h)	29.3 (100 000)
Output	kW (Btu/h)	23.4 (80 000)
Gas consumption (Hot)	l/s (ft³/h)	0.757 (293)
Flow 35 °C. temp. rise	l/m (gpm)	9.6 (2.1)
Domestic hot water specific rate	l/m (gpm)	11.2 (2.4)

Note. *Gas consumption is calculated using a calorific value of 38.7 MJ/m³ (1038 Btu/ft³) gross or 34.9 MJ/m³ (935 Btu/ft³) nett*

To obtain the gas consumption at a different calorific value:-

a. ***FOR L/S*** *- divide the gross heat input (kW) by the gross C.V. of the gas (MJ/m³)*

b. ***FOR FT³/H*** *- divide the gross heat input (Btu/h) by the gross C.V. of the gas (Btu/ft³)*

Key to symbols

IE = Ireland (Countries of
GB = United Kingdom destination)

PMS = Maximum operating pressure of water

C13 = A room sealed appliance designed for connection via ducts to a horizontal terminal, which admits fresh air to the burner and discharges the products of combustion to the outside through orifices which, in this case, are concentric. The fan is up stream of the combustion chamber.

I_{2H} = An appliance designed for use on 2nd Family gas, Group H only.

CAUTION. To avoid the possibility of injury during the installation, servicing or cleaning of this appliance care should be taken when handling edges of sheet steel components.

Response FF80	**Natural gas only**	**G.C. Appliance No. 47 415 09**
B.G. Certified	P.I. No. 87AR183	Destination Countries: GB, IE.

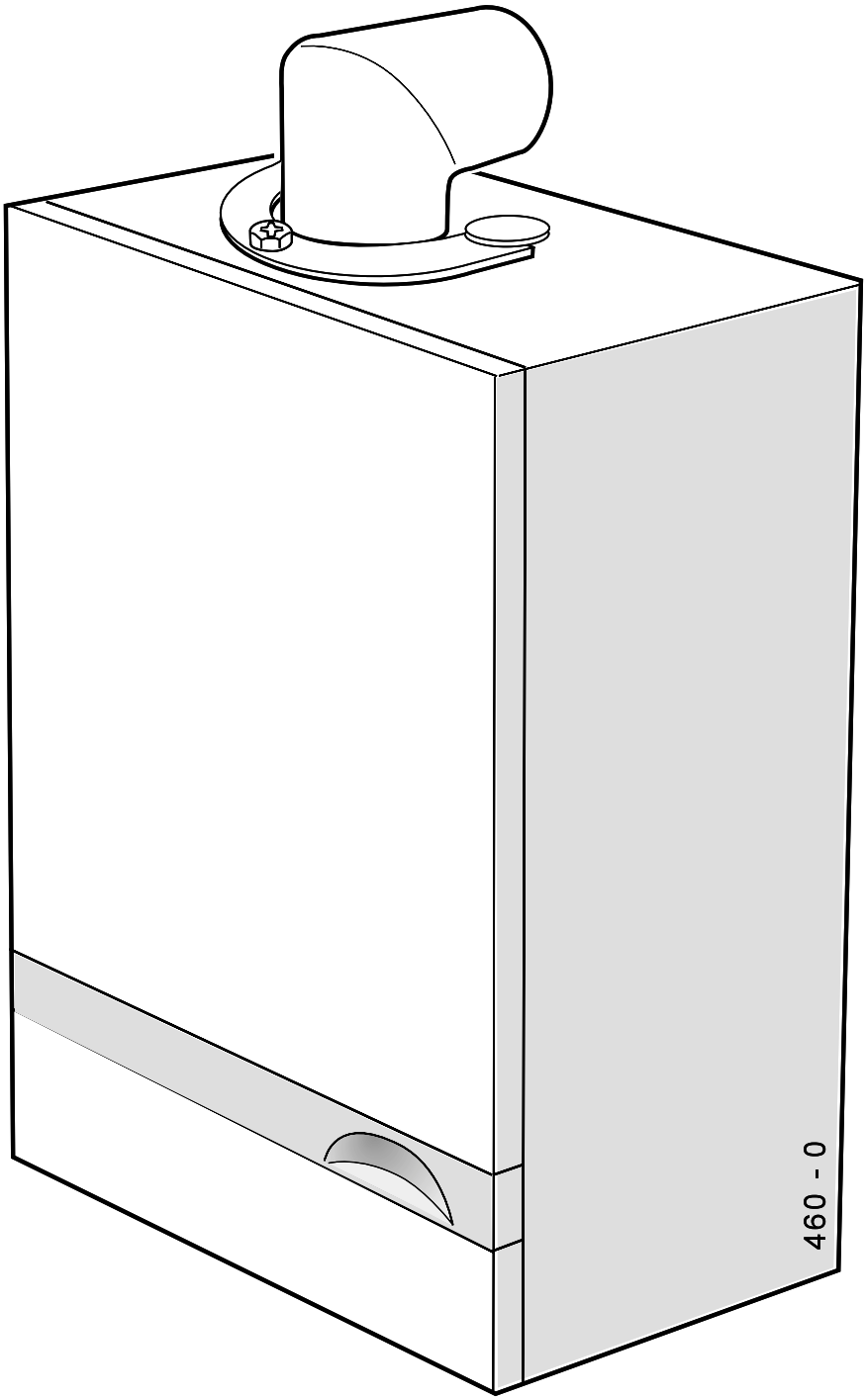

NOTE TO THE INSTALLER: LEAVE THESE INSTRUCTIONS ADJACENT TO THE GAS METER

CONTENTS

Air Supply 6

Boiler Dimensions/Clearances 5

Boiler Exploded Diagram 11

Commissioning and Testing 29

Electrical Connections 27

Electrical Diagrams 28

Electrical Supply Reqirements 8

Extension Ducts - Fitting 24

Fault Finding 47

Flow Wiring Diagram 28

Flue Fitting
- **Rear outlet** 14
- **Side outlet** 19

Flue Installation Reqirements 7

Gas Safety (Installation & Use) Regulations, 1994 6

Gas Supply Reqirements 7

Health & Safety Document No 635 6

Initial Lighting 30

Installation 12

Mandatory Requirements 6

Sealed System Requirements 8

Servicing 32

Short List of Parts 58

Terminal Guards 7

Thermostatic Radiator valves 8

Water and Systems 7

Water Connections 5

Wiring Diagrams 28

INTRODUCTION

Response FF80 are wall mounted, low water content, balanced flue combination gas boilers of type C_{13} intended for use with gas group $I2_{H.}$

Central heating (CH) output modulates between 11.7 kW (40,000 Btu/h) minimum and 17.6 kW (60,000 Btu/h) maximum.

Instantaneous domestic hot water (DHW) output is also fully modulating, with a maximum of 23.4kW (80,000 Btu/h).

The boiler is suitable for connection to fully pumped, pressurised sealed water systems ONLY.

A system bypass is only required when TRV's are fitted to **all** radiators (see Frame 5).

Boilers are supplied fully assembled and, being a 'tube-within-tube' design, require no diverter valve or domestic hot water calorifier.

A circulating pump, pressure gauge, safety valve and expansion vessels for both central heating (CH) and domestic hot water (DHW) are provided.

The CH flow temperature is controlled by an electronic thermostat. In DHW mode the boiler modulates to sustain a nominal adjustable water flow temperature of 60 °C.

The boiler casing is of white painted mild steel with a drop-down controls access door.

The boiler temperature control is located behind the controls access door.

The heat exchanger is made of copper and cast iron.

The system pipework must include drain cocks in appropriate places. Pipework may be taken downwards or upwards behind the boiler (using the stand-off channels).

OPTIONAL EXTRA KITS

Programmer Kit - fits neatly within the casing. Separate fitting instructions are included with the kit. **Note.** *If using an alternative programmer read Frame 42 first.*

Extension Ducts - up to 3m (120")

90° Elbow kit (Max. of 2 / installation).

Roof Flue Kit - for vertical flue connection

Vertex flue kit.

OPERATION

With no call for CH the boiler fires only when DHW is drawn off. When there is a call for CH, the heating system is supplied at the selected temperature until DHW is drawn off. The full output of the boiler is then directed by the automatic switching off of the circulation pump to heat the inner coils and supply a maximum draw-off of :

Response FF80 9.6 l/min(2.1 gpm) at 35 degree rise.

The nominal DHW temperature is 60 °C, but water drawn off when the boiler has been on for central heating may be hotter than this, for a short period of time.

1 BOILER WATER CIRCUIT DIAGRAMS

Domestic Hot Water Circuit

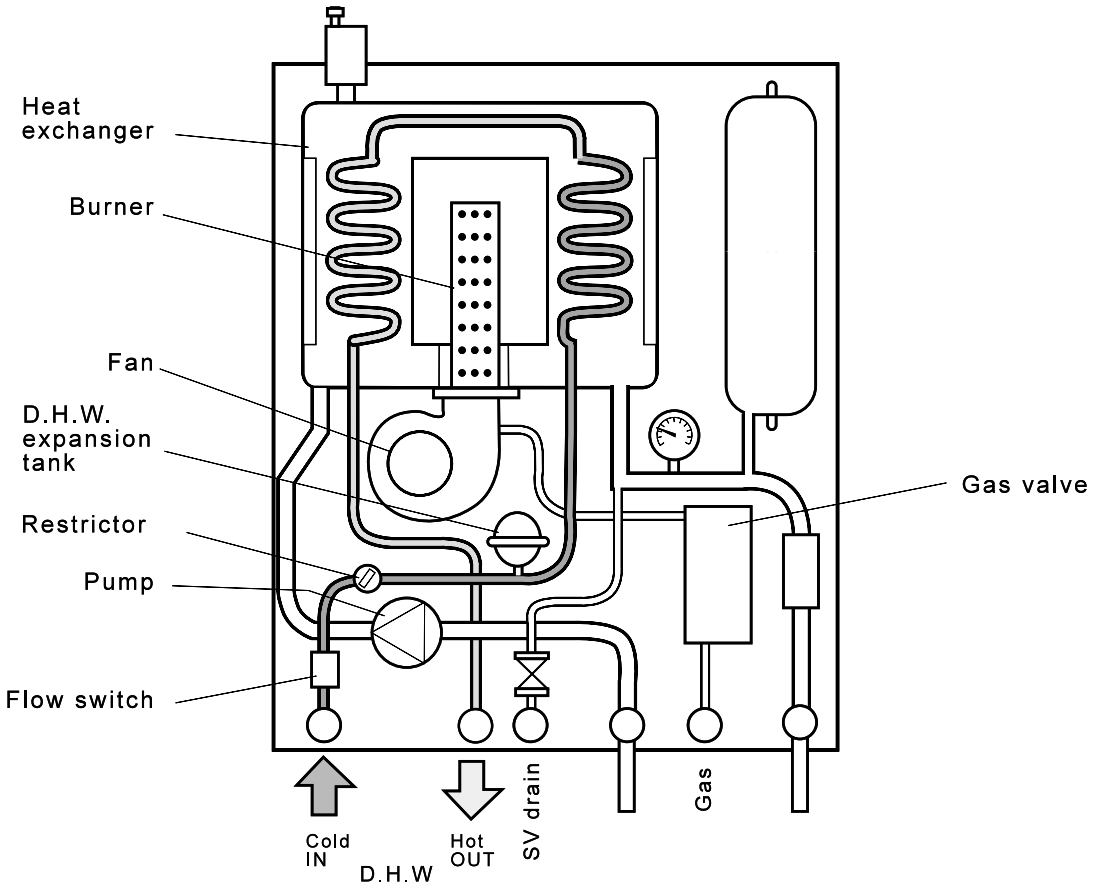

Central Heating Ciruit

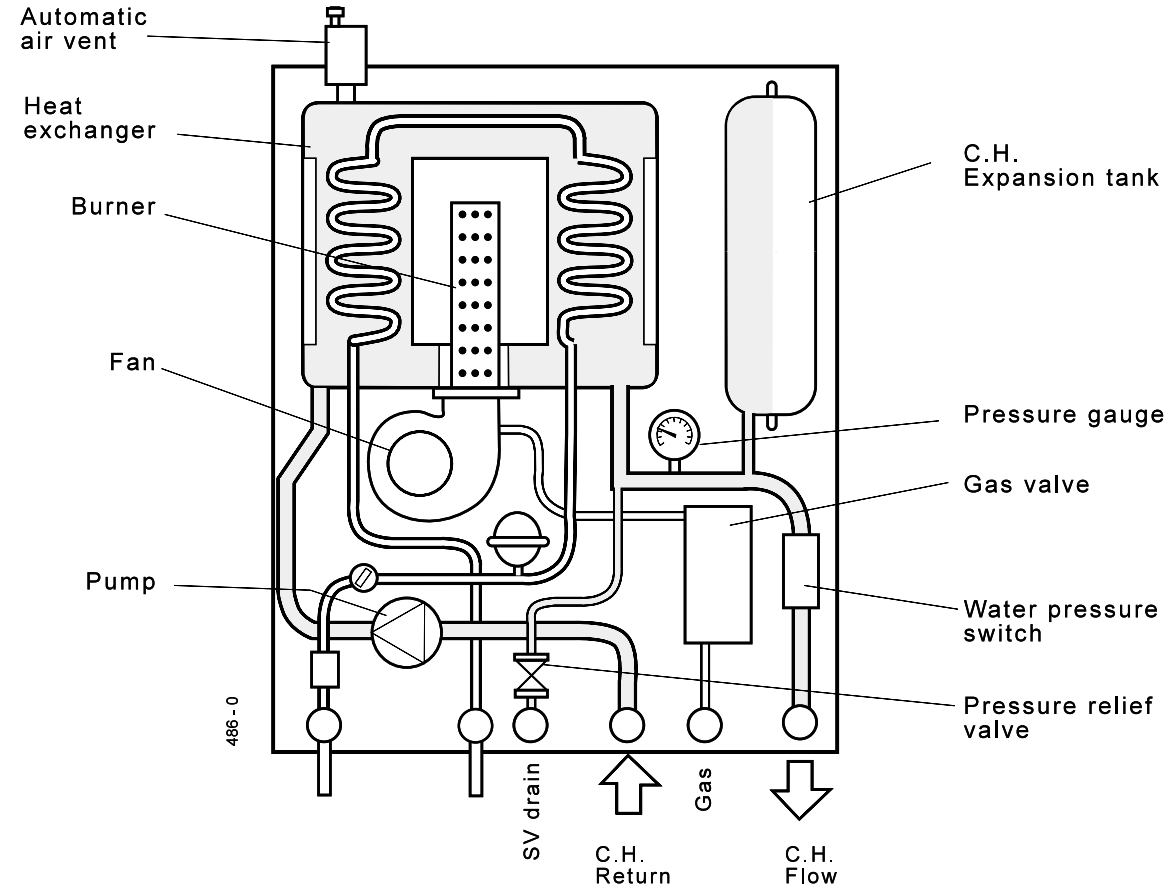

2 BOILER DIMENSIONS, SERVICES & CLEARANCES *all dimensions in mm (in.)*

Boiler connections are made on the mounting frame. Refer to Frame 17.

Note. *For the **FF80** central heating circuit 22mm (3/4") pipes may be used.*

The following minimum clearances must be maintained for operation and servicing. Additional space will be required for installation, depending upon site conditions.

Side and Rear Flue

a. Provided that the flue hole is cut accurately, e.g. with a core drill, the flue can be installed from inside the building where wall thicknesses do not exceed 600mm (24"). Where the space into which the boiler is going to be installed is less than the length of flue required the flue must be fitted from the outside.

Installation from inside ONLY

b. If a core boring tool is to be used inside the building the space in which the boiler is to be installed must be at least wide enough to accommodate the tool.

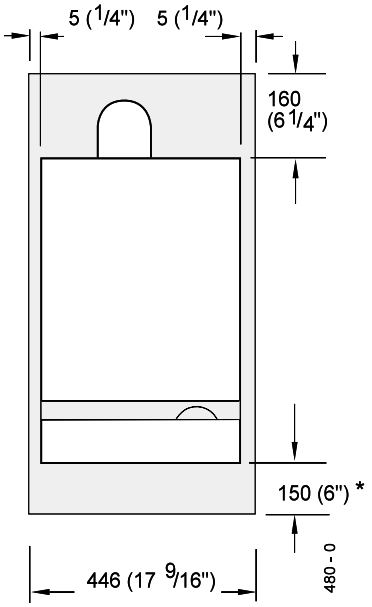

Front clearance

The minimum front clearance when built in to a cupboard is 5mm (1/4") from the cupboard door but 450mm (17 3/4") overall clearance is still required, with the cupboard door open, to allow for servicing. See Table 4.

CLEARANCES		
Per side	5 mm	
Top	160 mm	(depth of elbow and lift
Front	450 mm	clear of spigot space,
Bottom	150 mm	internal wall ring plate)

*** Bottom clearance**

Bottom clearance after installation can be reduced to 10mm in an adequately ventilated enclosed cupboard. However, 150 mm must be available for servicing.

Top Water Connections

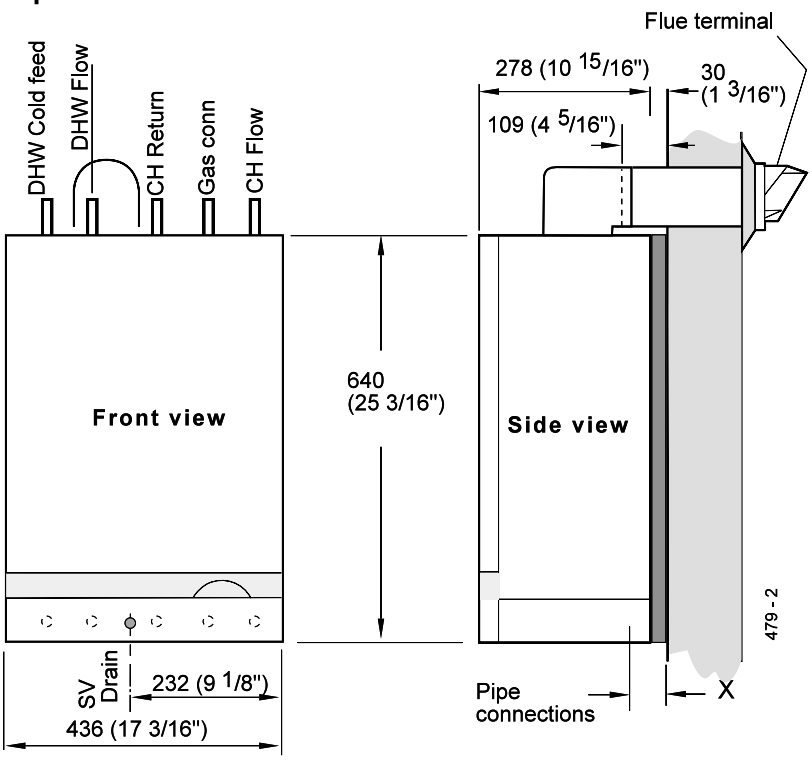

Bottom Water Connections

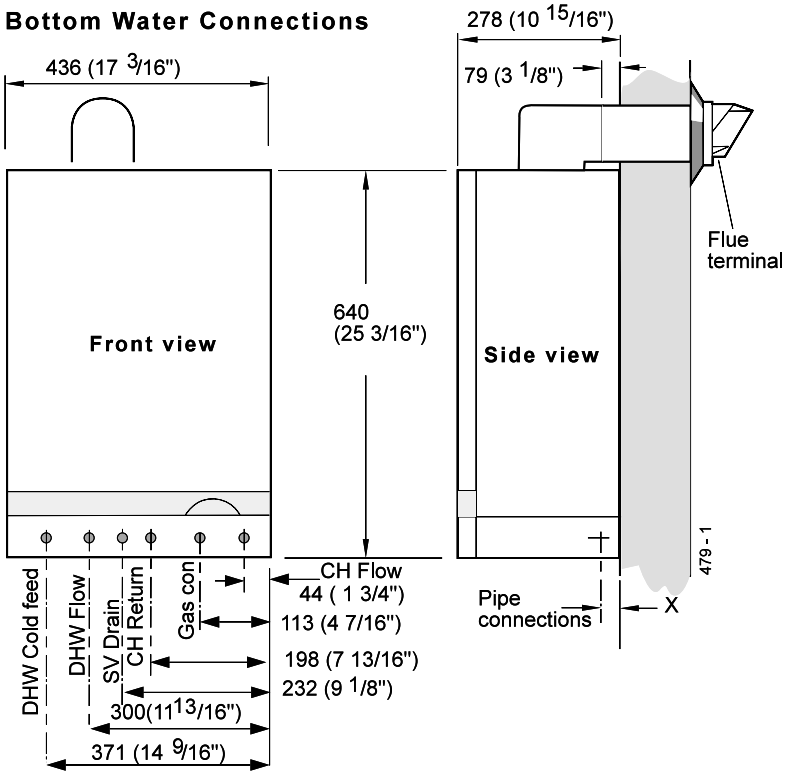

Distance X is 20mm for DHW pipes & safety valve outlet.

Distance X is 23.5mm for CH pipes & gas inlet.

GAS SAFETY (INSTALLATION AND USE) REGULATIONS, 1994

It is law that **all** gas appliances are installed and serviced by a CORGI registered installer (identified by ❀) in accordance with the above regulations. Failure to install appliances correctly could lead to prosecution. It is in your own interest, and that of safety, to ensure the law is complied with.

The installation of the boiler MUST also be in accordance with the latest I.E.E (BS.7671) Wiring Regulations, local building regulations, bye-laws of the local water authority, the building regulations and the Building Standards (Scotland) and any relevant requirements of the local authority.

Detailed recommendations are contained in the following British Standard Codes of Practice:

BS. 5440:1	Flues (for gas appliances of rated input not exceeding 60 kW).
BS. 5440:2	Ventilation (for gas appliances of rated input not exceeding 60 kW).
BS. 5449	Forced circulation hot water systems.
BS. 5546	Installation of gas hot water supplies for domestic purposes (2nd Family Gases)
BS 6700	Design, installation testing and maintenance of services supplying hot water for domestic use.
BS. 6798	Installation of gas fired hot water boilers of rated input not exceeding 60 kW.
BS. 6891	Low pressure installation pipes.

Health & Safety Document No. 635.

The Electricity at Work Regulations, 1989.

The manufacturer's notes must NOT be taken, in any way, as overriding statutory obligations.

IMPORTANT. These appliances are CE certificated for safety and performance. It is, therefore, important that no external control devices, e.g. flue dampers, economisers etc., are directly connected to these appliances unless covered by these Installation and Servicing Instructions or as otherwise recommended by **Caradon Ideal Limited** in writing. If in doubt please enquire.

Any direct connection of a control device not approved by **Caradon Ideal Ltd.** could invalidate the certification and the normal appliance warranty. It could also infringe the Gas Safety Regulations and the above regulations.

LOCATION OF BOILER AND FLUE OUTLET

The boiler must be installed on a flat and vertical wall, capable of adequately supporting the weight of the boiler and any ancillary equipment.

The boiler may be fitted on a combustible wall and insulation between the wall and the boiler is not necessary, unless required by the local authority.

The boiler must not be fitted outside.

Timber Framed Buildings

If the boiler is to be fitted in a timber framed building it should be fitted in accordance with the British Gas publication 'Guide for Gas Installations in Timber Frame Housing', reference DM2.

Bathroom Installations

The boiler may be installed in any room or internal space, although particular attention is drawn to the requirements of the current I.E.E. (BS.7671) Wiring Regulations and, in Scotland, the electrical provisions of the building regulations applicable in Scotland with respect to the installation of the boiler in a room or internal space containing a bath or shower.

Where a room sealed appliance is installed in a room containing a bath or shower then the appliance and any electrical switch or appliance control utilising mains electricity should be so situated that it cannot be touched by a person using the bath or shower.

Note. *It is not permissible to install a mains socket in a bathroom.*

Where installation will be in an unusual location, special procedures may be necessary and BS 6798 gives detailed guidance on this aspect.

Compartment Installations

A compartment or cupboard, including airing cupboards, must conform to the following:

- BS. 6798.
- For the minimum clearances required for safety and subsequent service see the wall mounting template and Frame 2. In addition, sufficient space will be required to allow lifting access to the wall mounting plate.
- Ventilation of the compartment ,e.g. permanent high and low level air vents, must be provided in accord with the current issue of BS 5440, Part 2. See Table 4 and 'Air Supply' below.

Table 4 - Minimum air vent free area for compartments / cupboards (high and low levels)

Boiler	Air from room or internal space - cm^2 ($in.^2$)	Air direct from outside - cm^2 ($in.^2$)
FF80	265 (41)	135 (21)

AIR SUPPLY

Detailed recommendations for air supply are given in BS.5440:2. The following notes are for general guidance:

1. If the boiler is to be installed in a cupboard or compartment, permanent air vents are required (for cooling purposes) in the cupboard/compartment at both high and low levels. The air vents must either communicate with room/internal space or be direct to outside air. The minimum effective areas of the permanent air vents required in the cupboard/ compartment are specified in Table 4 and are related to maximum rated heat input.
2. Both air vents MUST communicate with the same room or internal space or MUST be on the same wall to outside air.
3. In siting the air vents, care must be taken to avoid the freezing of pipework.
4. If the boiler is NOT installed in a cupboard or compartment no air vent is necessary.

GAS SUPPLY

The local gas supplier should be consulted, at the installation planning stage, in order to establish the availability of an adequate supply of gas. An existing service pipe must NOT be used without prior consultation with the local gas supplier.

A gas meter can only be connected by the local gas supplier or by a registered CORGI engineer.

Check that the appliance is suitable for the proposed gas supply. A working gas pressure of 20 mbar MUST be available at the boiler inlet.

Installation pipes MUST be fitted in accordance with BS. 6891. Pipework from the meter to FF80 boilers MUST be of an adequate size, i.e. not less than 22mm O.D. copper or 3/4" BSP iron.

Do not use pipes of smaller size than the boiler inlet gas connection.

The complete installation MUST be tested for gas soundness and purged as described in the above code.

FLUE INSTALLATION

The flue must be installed in accordance with the recommendations of BS. 5440: Part 1.

The following notes are intended for general guidance:

1. The boiler MUST be installed so that the terminal is exposed to external air.
2. It is important that the position of the terminal allows the free passage of air across it at all times.
3. Minimum acceptable spacing from the terminal to obstructions and ventilation openings are specified in Table 5.

Note (Positions 2-6) *: Due to the terminal design, installation is possible with clearances less than those specified in BS 5440, Part 1.*

Table 5 - Balanced flue terminal position

Terminal Position	Minimum Spacing
1. Directly below or alongside an openable window, air vent or other ventilation opening	300 mm (12")
2. Below guttering, drain pipes or soil pipes	25 mm (1")
3. Below eaves	25 mm (1")
4. Below balconies or a car port roof	25 mm (1")
5. From vertical drain pipes or soil pipes	25 mm (1")
6. From internal or external corners	25 mm (1")
7. Above adjacent ground, roof or balcony level	300 mm (12")
8. From a surface facing the terminal	600 mm (24")
9. From a terminal facing a terminal	1200 mm (48")
10. From an opening in a car port (e.g. door or window) into dwelling	1200 mm (48")
11. Vertically from a terminal on the same wall	1500 mm (60")
12. Horizontally from a terminal on the wall	300 mm (12")

4. Where the lowest part of the terminal is fitted less than 2m (6'6") above a balcony, above ground or above a flat roof to which people have access then the terminal MUST be protected by a purpose designed guard. The minimum spacing in Table 3, Nos. 2, 3, 4, 5 and 6 would be 75mm, in order to allow a terminal guard to be fitted.

   Terminals guards are available from boiler suppliers - ask for Tower Flue Guard, Model K1 . In case of difficulty seek advice from:

   Tower Flue Components Ltd.,
   Vale Rise, Tonbridge, Kent TN9 1TB
   Telephone No. 01732 351 555

   Ensure that the guard is fitted centrally.
5. Where the terminal is fitted within 850mm (34") of a plastic or painted gutter or 450mm (18") of painted eaves then an aluminium shield at least 750mm (30") long should be fitted to the underside of the gutter or painted surface.
6. The air inlet/products outlet duct and the terminal of the boiler MUST NOT be closer than 25mm (1") to combustible material. Detailed recommendations on the protection of combustible material are given in BS. 5440: 1990.
7. Where it is essential that the terminal wall plate is fitted, i.e. wall thicknesses over 610mm (24") or with an inaccurately cut hole, the minimum spacing in Table 3, Nos. 2, 3, 4, 5 and 6 would be 60mm (2.4") in order to allow the terminal wall plate to be fitted.

IMPORTANT. It is absolutely ESSENTIAL to ensure, in practice, that products of combustion discharging from the terminal cannot re-enter the building or any other adjacent building through ventilators, windows, doors, other sources of natural air infiltration, or forced ventilation / air conditioning.

If this should occur the appliance MUST be turned OFF, labelled as 'unsafe' and corrective action taken.

FLUE LENGTHS

The flue assembly can be adapted to accommodate flue lengths up to 3 metres. Refer to Frame 10.

WATER CIRCULATION SYSTEM

The boilers are designed for connection to pressurised, fully pumped, sealed water central heating systems ONLY. The domestic hot water (DHW) calorifier is incorporated within the heat exchanger and only requires connection to the mains water supply.

IMPORTANT. Ensure that the mains water supply pressure is adequate to provide the required DHW flow rate. Refer to Table 1 on page 3.

The central heating system should be in accordance with BS. 6798 and, in addition, for smallbore and microbore systems BS. 5449.

The domestic hot water system should be in accordance with BS. 5546 and BS. 6700.

Copper tubing to BS 2871:1 is recommended for water carrying pipework and MUST be used for pipework carrying potable water.

Any soldered joints on potable water pipework MUST NOT be made with solder containing lead.

Ancillary pipework not forming part of the useful heating surface should be lagged to prevent heat loss and any possible freezing - particularly where pipes run through roof spaces or ventilated underfloor spaces.

Draining taps should be at least 1/2" BSP nominal size and be in accordance with BS 2879.

Maximum recommended system hydraulic losses are given in Table 7, within Frame 5.

WATER TREATMENT

Antifreeze fluid, corrosion and scale inhibitor fluids suitable for use with boilers having copper heat exchangers may be used in the central heating system.

For further information contact either:

Fernox Manufacturing Co. Ltd.
Britannic Works
Clavering
Essex
CB11 4QZ

Tel.01799 550811

or

Grace Service Chemicals
Grace Dearborn Ltd.,
Widnes
Cheshire

Tel. 0151 424 5351

THERMOSTATIC RADIATOR VALVES (TRV)

Caradon Ideal Ltd. recommend that heating systems utilising full thermostatic radiator valve control of temperature in individual rooms should also be fitted with a room thermostat controlling the temperature in a space served by radiators not fitted with such a valve as stated in BS. 5449.

When thermostatic radiator valves are used, the space heating temperature control over a living area having a heating requirement of at least 10% of the boiler heat output should be achieved using a room thermostat whilst other rooms are individually controlled by thermostatic radiator valves.

For further information refer to the 'Good Practice Guide 143' , a publication of the Energy Efficiency Office, available from the Building Research Establishment, Garston, Watford WD2 7JR. Tel: 01923 664258.

ELECTRICAL SUPPLY

Wiring external to the appliance MUST be in accordance with the current I.E.E. (BS.7671) Wiring Regulations and any local regulations which apply.

The point of connection to the mains should be readily accessible and adjacent to the boiler, except for bathroom installations where the point of connection to the mains MUST be situated outside of the bathroom.

Note. *Where a room sealed appliance is installed in a room containing a bath or shower then the appliance and any electrical switch or appliance control utilising mains electricity should be so situated that it cannot be touched by a person using the bath or shower.*

3 SEALED SYSTEM REQUIREMENTS - Central Heating

N.B. Ideal Response FF80 *combination boilers are suitable for fully pumped pressurised sealed systems only.*

REQUIREMENTS

1. General

Any method of filling, refilling, topping up or flushing sealed primary hot water circuits from the mains via a temporary hose connection is only allowed if it complies with Water Bye-law 14, which states:

" (1) No closed circuit shall be connected to a supply pipe.

(2) Paragraph (1) shall not apply to a temporary connection provided that:

a. The connection is made through a double check valve assembly or some other no less effective device which is permanently connected to that circuit;

and

b. The temporary connection is removed after use. "

The method described in this instruction complies with that Byelaw.

2. BS. Requirements

The installation must comply with the requirements of BS. 6891:1988 and BS. 5449.

3. Flow Temperature

The installation should be designed to work with flow temperatures of up to 90° C.

4. Working Pressure

All components of the system must be suitable for a working pressure of 3 bar (45 lb/in^2) and temperature of 110°C. Extra care should be taken in making all connections so that the risk of leakage is minimised.

The following components are incorporated within the appliance:

a. Circulating pump.

b. Safety valve; with a non-adjustable pre-set lift pressure of 3 bar (45lb/in^2).

c. Pressure gauge; covering a range of 0-6 bar.

d. 8-litre expansion vessel; with an initial charge pressure of 1 bar (15 lb/in^2).

e. Domestic hot water (DHW) mini expansion vessel.

For further details refer to BS.5449:1 and the British Gas Corporation publication 'Specifications for Domestic Central Heating and Hot Water'.

4 SEALED SYSTEM REQUIREMENTS - Central Heating - continued

5. Filling the system

Fill the system through a temporary hose connection from a draw-off tap supplied from a service pipe under mains pressure. Where the mains pressure is excessive a pressure reducing valve shall be used to facilitate filling.

The following fittings shall form a permanent part of the filling system:

A double non-return valve with at least 1 isolation valve, which is used as a temporary connection to fill the system from the mains, after which it should be disconnected and left with the installation.
Proceed with the following:

- Thoroughly flush out the whole of the system with cold water before fitting the boiler.
- Fill and vent the system until the pressure gauge registers 1.5 bar (22 lb/in^2). Examine for leaks.
- Release water from the system until a pressure of 1 bar (15 lb/in^2) is reached. To avoid getting debris on the valve seat, do **not use** the safety valve to do this.
- Light the boiler and heat the system to the maximum working temperature. Examine for leaks.
- Turn off the boiler and drain the system while still hot.
- Refill and vent the system.
- Re-pressurise the system to the desired charge pressure (see Table 6).

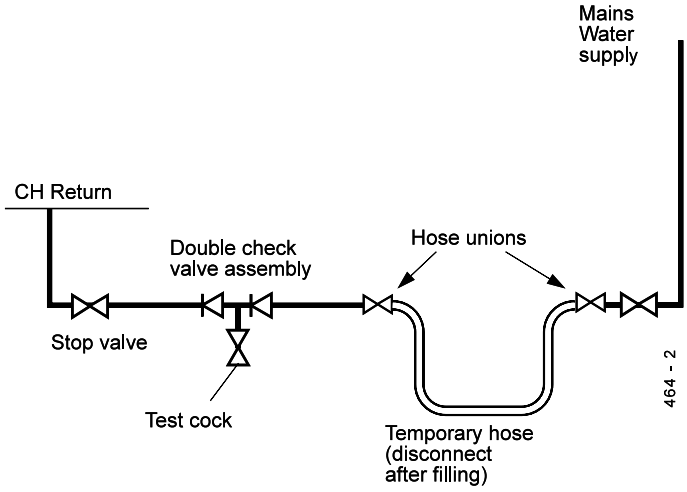

System filling and make-up

6. Size of expansion vessel

For the system water expansion to be contained by the 8-litre expansion vessel fitted to the boiler the cold system volume must not exceed:

119 litres when pressurised to 0.5 bar (cold)

107 litres when pressurised to 0.7 bar (cold)

91 litres when pressurised to 1.0 bar (cold)

If the pressure exceeds 2.65 bar when the boiler is up to temperature with all radiators in use then an additional expansion vessel MUST be installed on the return pipework.

For expansion volumes see Table 6.

Guidance on vessel sizing is given below and also in BS 7074:1 and BS 5449.

Table 6 - Vessel sizing / Expansion volumes

System charge pressure (bar)	0.5	0.7	1.0
Safety valve setting (bar)	3.0		
Vessel pre-charge pressure (bar)	0.5	0.7	1.0
System volume litres	**Volume of expansion vessel in addition to 8-litre unit fitted to boiler**		
75	None	None	None
100	None	None	0.8
125	0.4	1.3	3.0
150	2.1	3.1	5.1
175	3.8	4.1	7.3
200	5.4	6.8	9.5
225	7.1	8.7	11.7
250	8.8	10.5	13.9
275	10.6	12.4	16.1
300	12.2	14.2	18.4
Multiply this factor by system volume and deduct 8 litres to obtain size of additional vessel for other system volumes.	0.067	0.074	0.088

5 SEALED SYSTEM REQUIREMENTS - Central Heating - continued

7. Thermostatic radiator valves.

Caradon Ideal Limited support the recommendations made by leading manufacturers of domestic heating controls that heating systems utilising full thermostatic radiator valve control of temperature in individual rooms should also be fitted with a room thermostat controlling the temperature in a space served by radiators not fitted with such a valve. Such an arrangement will provide for a more efficient control of the environment and will also avoid the continuous running of the circulation pump during programmed heating ON periods, saving electrical energy.

It is therefore strongly recommended that, when thermostatic radiator valves are used, the space heating temperature control over a living/dining area or a hallway, having a heat requirement of at least 10% of the boiler output, is achieved using a room thermostat whilst other rooms are individually controlled by thermostatic radiator valves.

However, if thermostatic radiator valves are fitted to **all** radiators then a bypass MUST be fitted. This should consist of 22mm (3/4") pipe for the FF 80 positioned as far from the boiler as possible and incorporating a balancing valve *which cannot be adjusted by the householder.*

For adjustment refer to Frame 45

a. The total length of pipework **A, B, C & D** *MUST NOT* be less than 3m (10') and must not include any other valves.

b. The balancing valve MUST be at least one turn open.

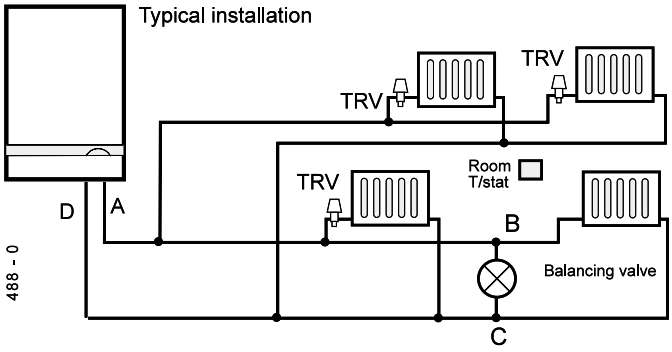

Table 7 - Water Flow Rate and Pressure Loss

Boiler		FF80
Max CH Output	kW (Btu/h)	17.6 (60 000)
Water flow rate	l/sec (gal/min)	0.382 (5.04)
Temperature differential	°C (°F)	11 (20)
Head available for system pump, pos.3	m.w.g. (ft.w.g.)	2.75 9.0

8. Hydraulic resistance

Having subtracted the hydraulic resistance of the boiler the head available to overcome system resistance at MAXIMUM CENTRAL HEATING OUTPUT, with an 11°C (20°F) temperature differential, is shown in Table 7.

9. Draining the system

Draining taps MUST be located in accessible positions to permit the draining of the whole central heating system, including the central heating side of the boiler. The taps should be at least 1/2" BSP nominal size and be in accordance with BS 2879. The boiler flow and return service valves (fitted to the piping frame) have drain plugs to drain the BOILER ONLY, in the event of the system drain tap being unable to do so.

6 DOMESTIC HOT WATER REQUIREMENTS

1. The domestic hot water service must be in accordance with BS 5546 and BS 6700.

2. For the minimum and maximum working pressures of the FF80 domestic hot water circuit refer to Table 1, page 3.

3. The cold water supply pipe should be flushed before fitting the boiler.

4. The boilers are suitable for connection to most types of washing machine and dishwashing appliances.

5. When connecting to suitable showers, i.e. those designed for modulating domestic hot water, ensure that:

a. The cold inlet to the boiler is fitted with an approved anti-vacuum or syphon non-return valve.

b. Hot and cold supplies are of equal pressure.

6. Hard water areas

In areas where the water is 'hard' it is recommended that a proprietary scale-reducing device is fitted into the boiler cold supply - within the requirements of the local water company.

7 BOILER ASSEMBLY - Exploded View

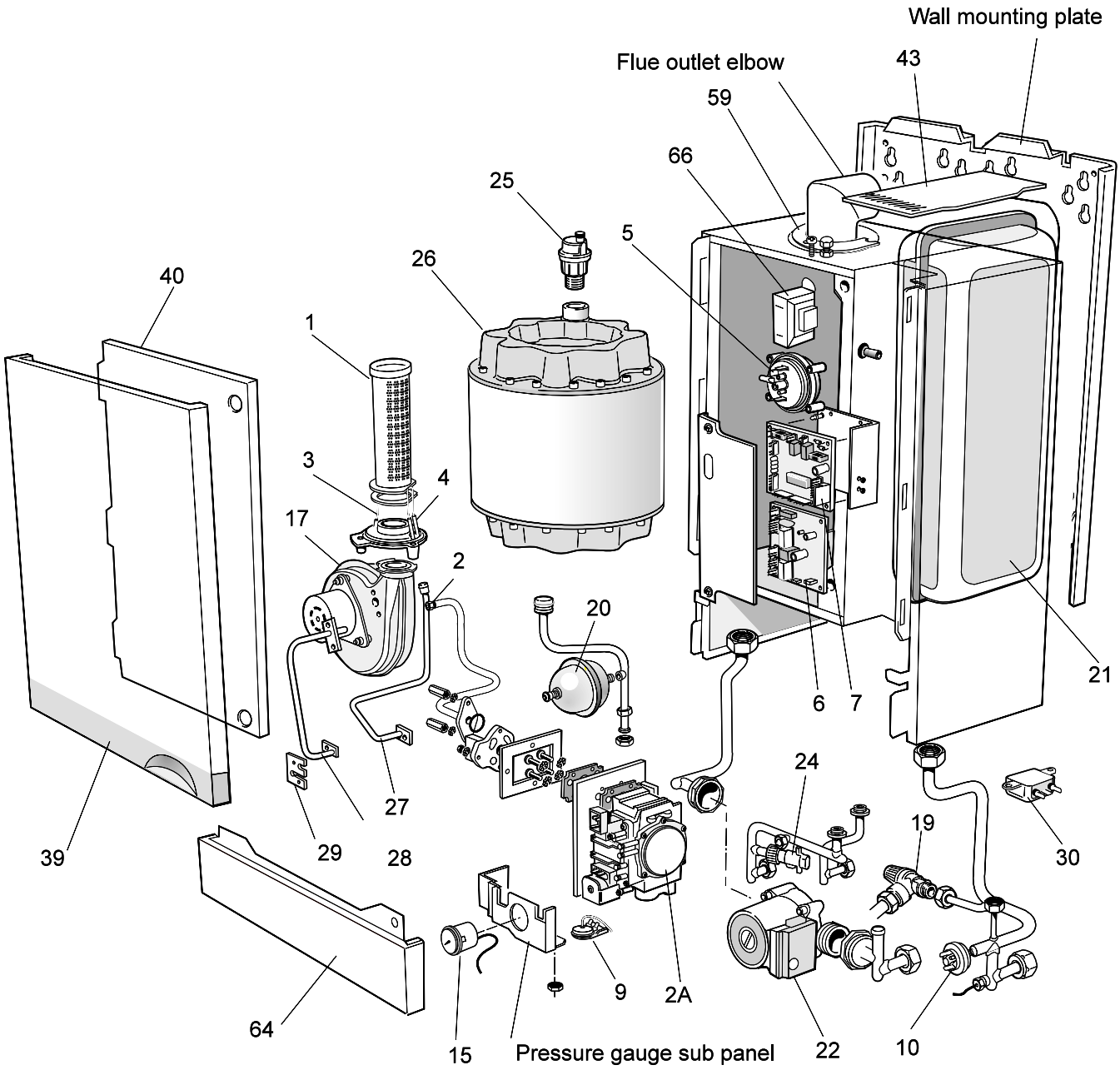

LEGEND

1. Main burner.

2. Main burner injector.

2A. Gas valve.

3. Flame sensing electrode.

4. Ignition electrode.

5. Air pressure switch.

6. PCB 37.

7. PCB 38.

9. Boiler overheat 'stat.

10. Water pressure switch.

15. Pressure gauge.

17. Fan assembly.

19. Safety valve.

20. DHW expansion vessel

21. CH expansion vessel

22. Pump.

24. DHW Flow switch.

25. Automatic air vent.

26. Heat exchanger.

27. Burner sensing pipe.

28. Fan sensing pipe.

29. Sensing pipe clamp.

30. EMC filter.

39. Boiler front panel.

40. Sealing panel

43. Tank cover assy.

59. Turret clamp.

64. Controls panel assy.

66. Transformer.

8 UNPACKING

The boiler is supplied fully assembled in one Pack A, together with a standard flue assembly for lengths up to 600mm, rear or side flue outlet, in Pack B.

Unpack and check the contents.

Pack A Contents

- The boiler
- These Installation & Servicing Instructions
- The User's Instructions
- Wall mounting template
- Wall mounting frame
- 1 pair stand-off channels (optional use)
- Flue turret
- Clamping and sealing ring
- Mains connector assy.
- Hardware Pack

Optional extras, if ordered, are available in separate boxes.

- Programmer Kit
- Roof Flue Kit
- Extension Duct Kit D
- 90⁰ Elbow Kit
- Powered Vertical flue Kit

Hardware Pack

- M6 x 10 Pp. Hd. screw - 4 off
- 1/2" x 15mm copper connector - 1 off
- No.14 x 2" slotted Rd. Hd. screw - 6 off
- No.10 x 2" slotted Rd. Hd. screw - 4 off
- Wall plug (brown) - 10 off
- Press. relief valve drain pipe - 1 off
- Pressure relief valve nut - 1 off
- 22mm pipe connector - 2 off
- 15mm pipe connector - 3 off
- 22mm x 15mm reducing coupling - 1 off
- DHW filter - 1 off
- 22mm compression nut - 2 off
- 15mm compression nut - 2 off
- 22mm olive - 2 off
- 15mm olive - 3 off

. . . . . .

- *22mm 'O' ring - 2 off (spare items for CH/*
- *15mm 'O' ring - 1 off DHW connectors)*

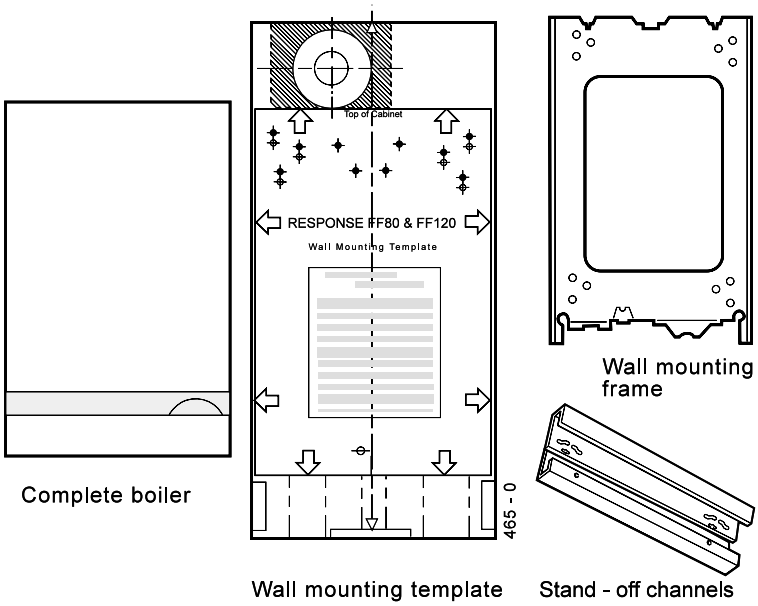

Pack B Contents

- Terminal grille assembly
- No.8 x 8mm self tapping screw - 3 off
- Flue support cutting aid - 1 off
- Terminal wall plate - 1 off

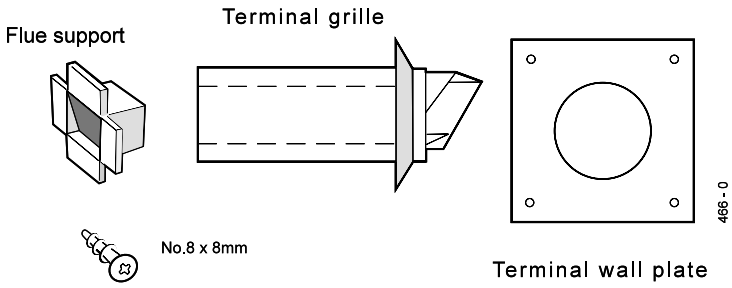

9 PACKAGING AND FRONT PANEL REMOVAL

1. Remove the lid.
2. The top tray contains:
   - Flue turret
   - Mounting frame
   - Hardware pack
   - Stand-off channels
   - Wall mounting template
   - Installation instructions

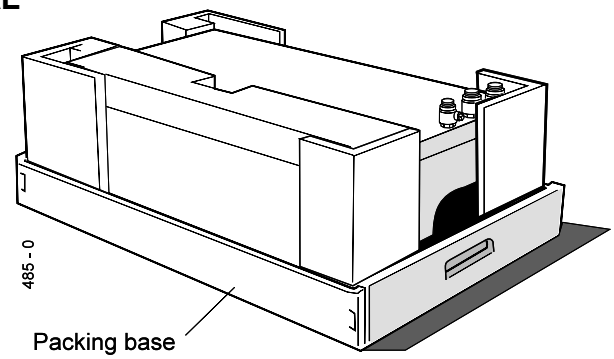

These contents can be removed, leaving the boiler in its protective package.

10 DETERMINING THE FLUE LENGTH AND FLUE PACKS REQUIRED

Use a maximum of two extension ducts only. When using 90° elbow kits, each elbow is equivalent to 1 metre flue length.

Calculate the total length of flue by the following:
Rear flue length = Dim. W + 79mm (3 1/8")

Rear flue length with stand-off channels = Dim. W + 109mm (4 3/8")

RHS flue length = Dim. R + 220mm (8 5/8")

LHS flue length = Dim. L + 96mm (3 3/4")

Note.
These figures include the length of flue entering the flue turret socket

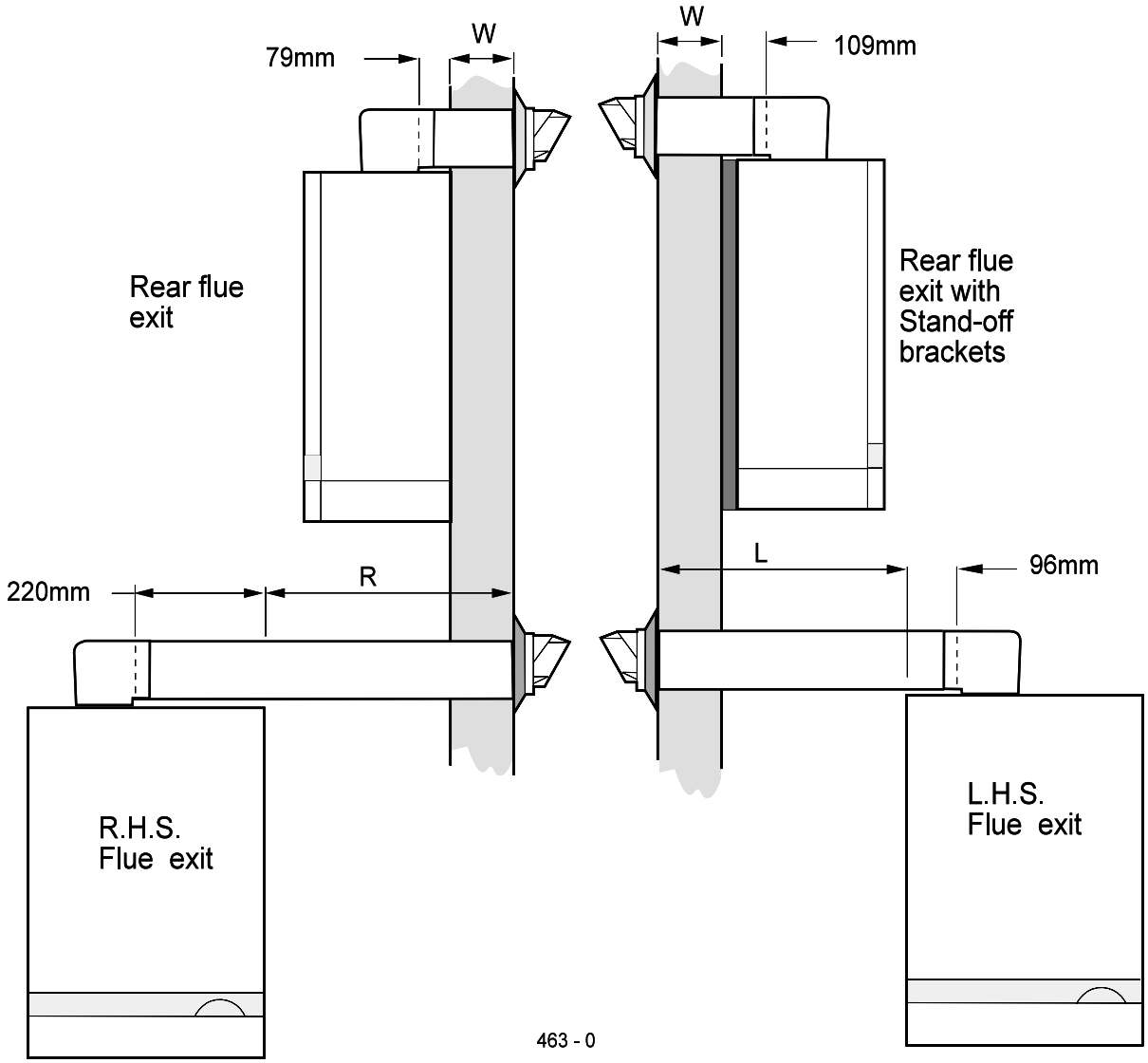

Flue Kit Requirements

Total Length of Flue	Extra Packs Required
* 600mm (23 5/8")	None
*1800mm (70 7/8")	One Pack D
3000mm (118 1/8")	Two Pack D

Pack B - supplied as standard.
Pack D - optional extra kit, to extend the flue.

*** N.B.**

*If the measured flue length is **only just above** these sizes, it may be necessary to shorten the standard flue before adding extension duct(s), in order to prevent interference between flue duct connectors and the boiler flue elbow.*

For side flue option PROCEED TO FRAME 20.

REAR FLUE OUTLET

11 REAR FLUE ASSEMBLY - Exploded View

LEGEND

1. Terminal.
2. Weather seal.
3. Duct assembly.
4. Sealing ring.
5. Clamping ring.
6. No.8 x 8 self tapping screw.
7. Flue turret.
8. M5 x 10 pozi Hex screw.
9. Turret clamp.

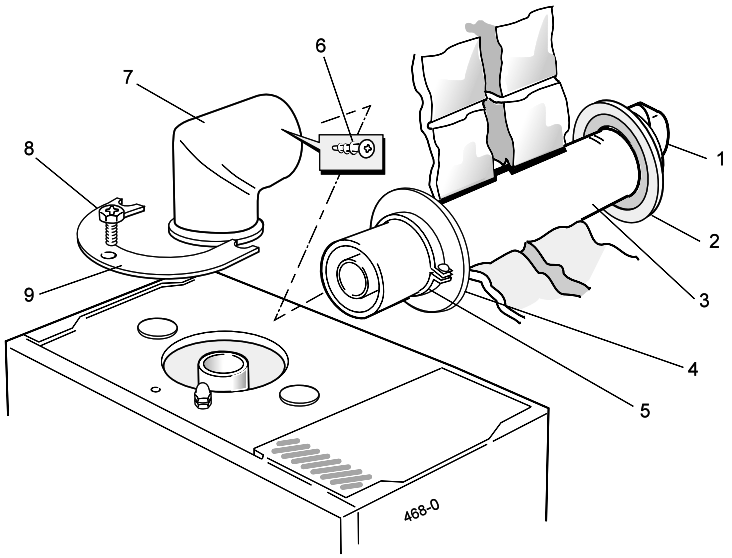

12 WALL MOUNTING TEMPLATE (Rear Flue)

IMPORTANT.

For direct mounting (wall mounting frame on wall) choose one black dot in each group.

If using the stand-off channels choose one dotted circle in each group. Care MUST be taken to ensure the correct holes are drilled.

1. Tape the template into the selected position.
2. Ensure squareness by hanging a plumbline as shown.
3. Mark onto the wall the following:
   - **a.** The 6 wall mounting plate screw positions.
   - **b.** The position of the flue duct.
     Mark the centre of the hole as well as the circumference.
4. Remove the template from the wall.

Note. *For boiler to be flush with 300mm deep units use stand-off channels*

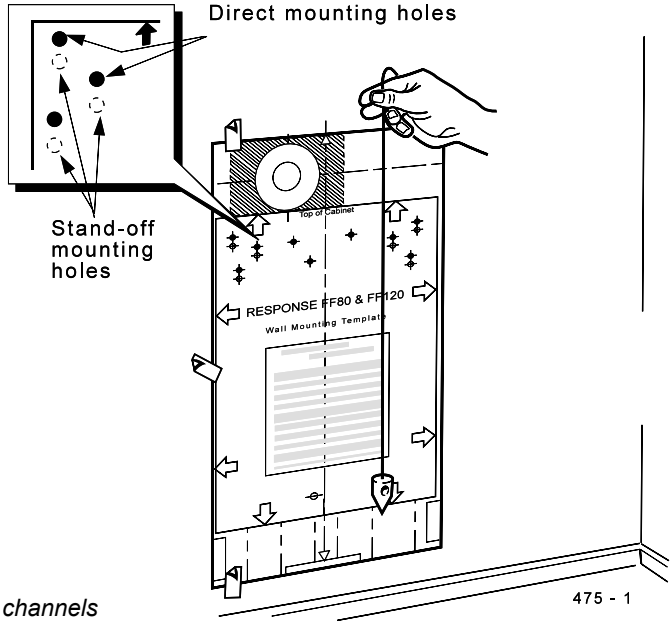

13 DRILLING THE WALL (Rear Flue)

IMPORTANT. Ensure that, during the cutting operation, masonry falling outside the building does not cause damage or personal injury.

1. Cut the flue hole (preferably with a 5" core boring tool), ensuring that the hole is square to the wall.
2. Measure and note the wall thickness 'W'.
3. Drill the 6 fixing holes with an 8mm (5/16") masonry drill.

Note. *If the terminal is to be sited within 25-40mm of a corner or vertical pipe (refer to Table 4) then the hole MUST be accurately cut and the rubber weather seal trimmed around the groove provided.*

(The terminal wall plate cannot be fitted close to a corner).

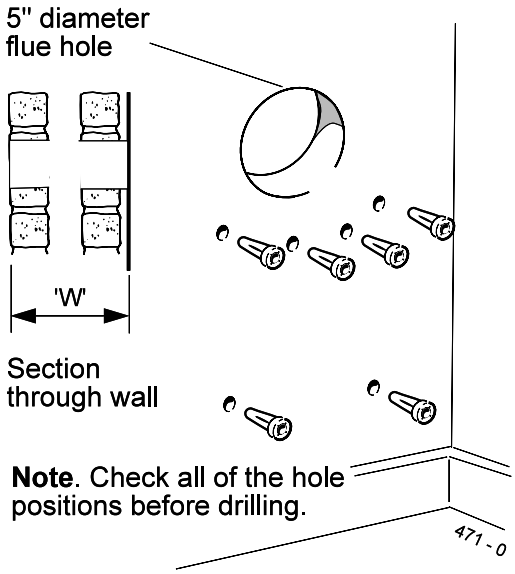

14 FITTING THE WALL MOUNTING FRAME

Refer to Frame 34 for service connections.

Fit the wall mounting frame either:

a. Directly to the wall

- Insert wall plugs.
- Put the screws into the wall plugs and leave 10mm proud
- Hang the frame onto the screws and tighten up.

or

b. Use stand-off channels
(To allow pipework to be taken upwards).

- Insert wall plugs.
- Put the screws into the wall plugs and leave 10mm proud.
- Fasten each channel to the frame with the 6mm screws provided.
- Hang the channels and frame onto the screws and tighten up.

Note. *If the clearances above and below the boiler are less than the length of the pipes it will be necessary to position the pipes behind the wall mounting plate BEFORE the plate is screwed to the wall.*

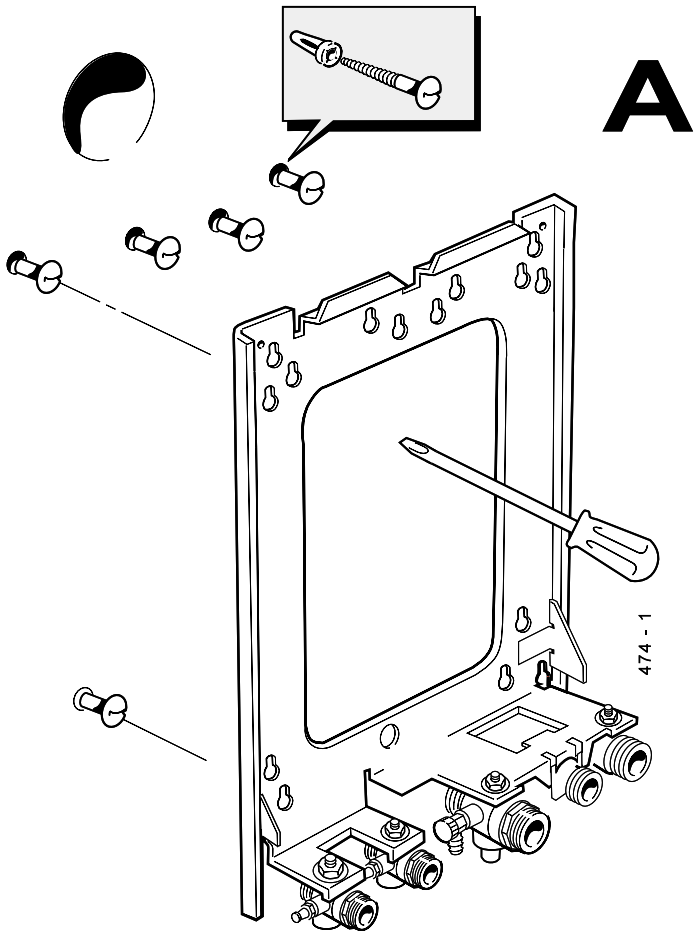

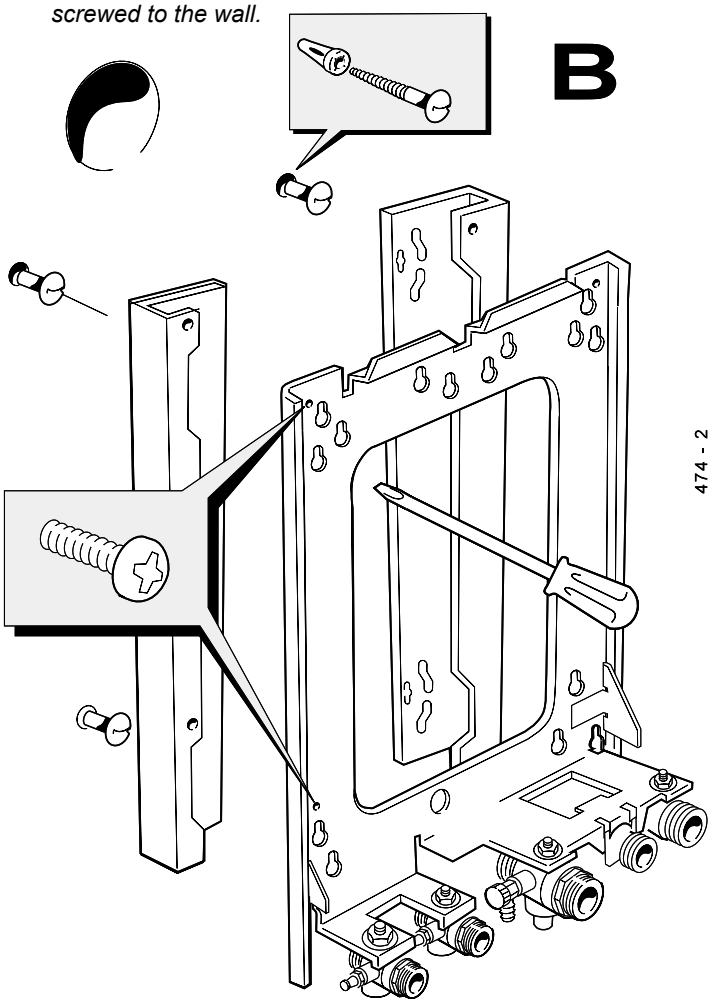

Showing the use of 'stand-off' channels, to enable upward pipework.

REAR FLUE OUTLET

REAR FLUE OUTLET

15 CUTTING THE FLUE - Wall thicknesses up to 600mm (23 5/8")

1. The flue cut length is calculated as detailed in Frame 10.
2. Measure from the groove and mark the tube.
3. To ensure the tube is cut square, mark the flue all the way round. using (e.g). a long straight strip of paper with its ends overlapped.
4. Cut to length, using the cardboard support aid.
5. Remove the cardboard support and any burrs.

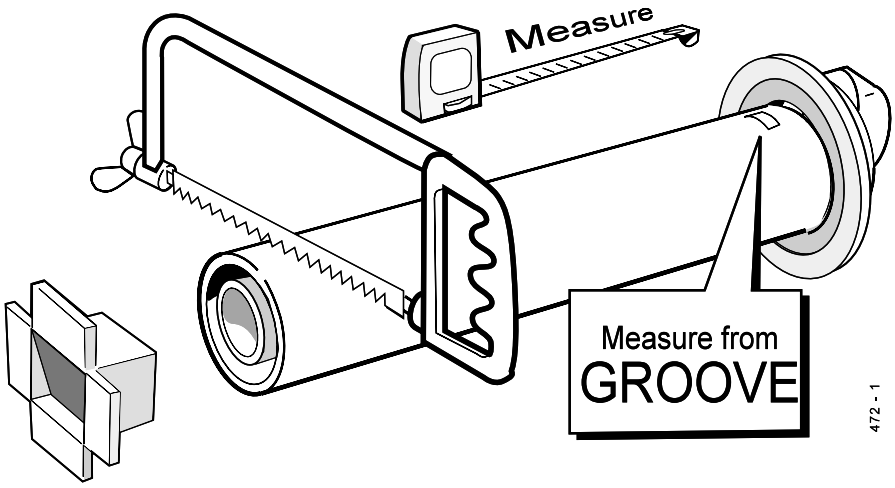

For flue lengths greater than 600mm (23 5/8") refer to Frames 30 to 32 - Flue Extension Ducts

16 FITTING THE FLUE

1. Attach the clamping/sealing rings to the flue (this prevents the assembly being pushed right through the hole and causing an accident).
2. Pass the cut flue through the prepared hole, ensuring that the groove is uppermost.
3. Pull the flue back to compress the rubber seal and fix in place with the clamping/sealing rings.

Note.
*To facilitate turret fixing or removal do **NOT** make good the wall.*

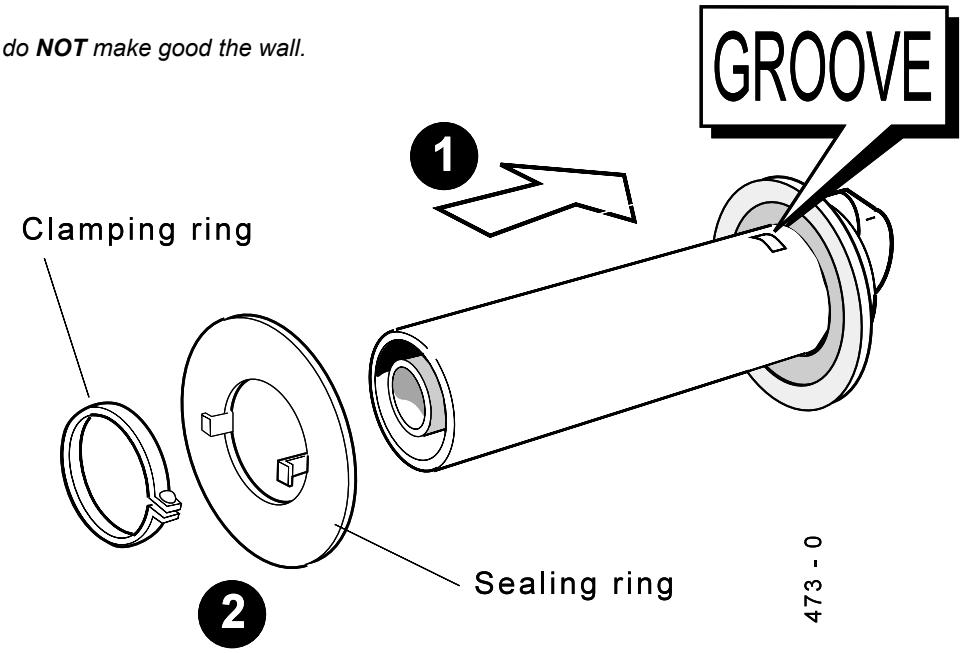

17 MOUNTING THE BOILER

1. The boiler may be prewired to the loose electrical connector and secured with the cable clamps. Refer to Frame 39.
2. Lift the boiler onto the wall mounting frame, locating it over the tabs at the top of the frame.
3. Lower the boiler into position.
4. Remove plastic plugs and check that 'O' rings are in position (spare 'O' rings in the hardware pack).
5. Fit the filter to the DHW inlet valve as shown.

IMPORTANT. *This must not be omitted.*

6. Engage and tighten the 5 pipe unions.
7. Fix the pressure relief valve drain pipe to the pressure relief valve, using the nut and olive supplied in the hardware pack.

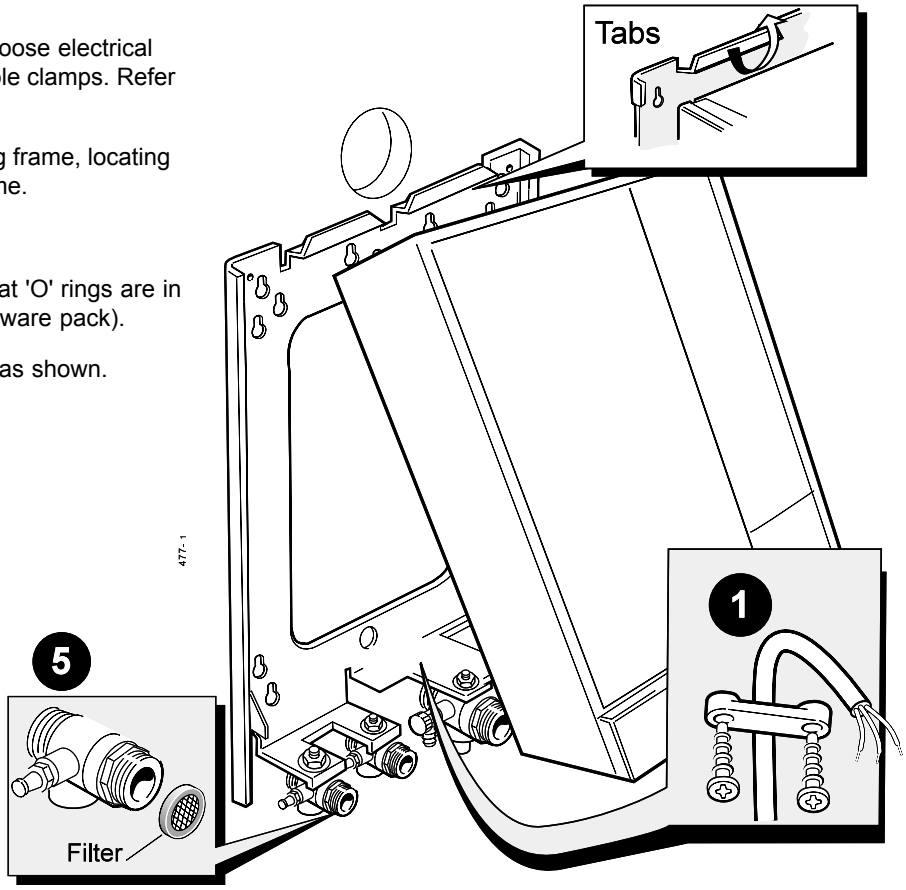

18 CONNECTING THE TURRET TO THE BOILER

1. Mate the turret to the flue.
2. Secure the flue turret on top of the boiler by inserting the open ends of the turret clamp under the 2 studs and fixing it in the middle with the single M5 x 10mm pozi-hex screw provided.
3. Drill a 3.2mm hole through the flue via the hole already present in the turret. Secure the turret to the flue, using the self tapping screw provided.
4. **Flues over 1 metre long.**

   Fix the flue support bracket to the wall, using the wall plug and wood screw.

   - For standard installations use the short wood screw.
   - If the 'stand-off' option is used secure the support bracket, using the spacer bracket and long wood screw.

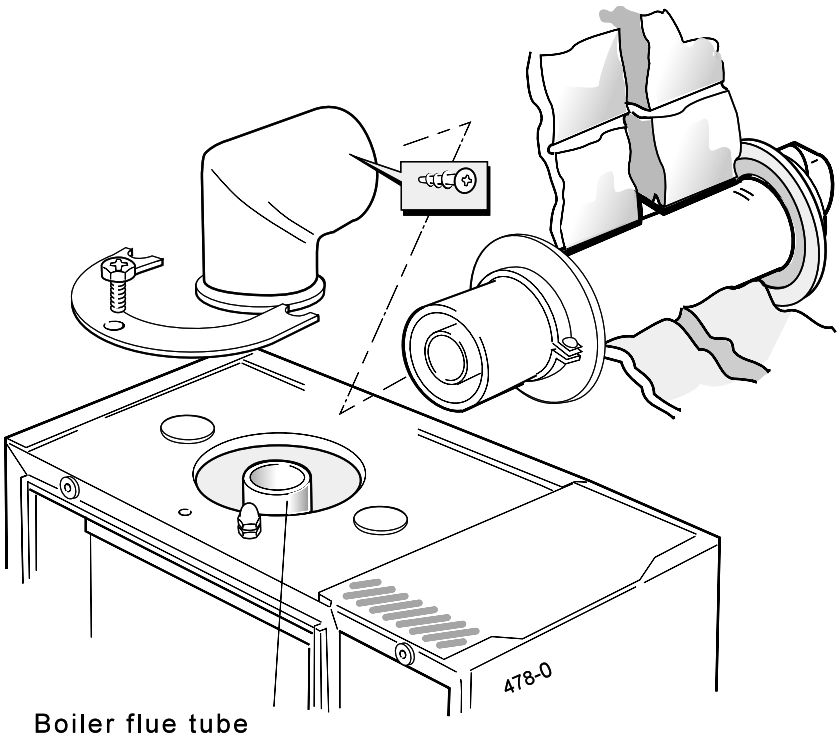

REAR FLUE OUTLET

REAR FLUE OUTLET

19 TERMINAL WALL PLATE

This plate allows neat concealment and full compression of the rubber seal. It should be used, where practicable::

a. When the wall is more than 24" thick (to support the flue weight and prevent movement).

or

b. When the hole has not broken through neatly.

or

c. When the wall face is rough and the rubber seal on its own would be ineffective.

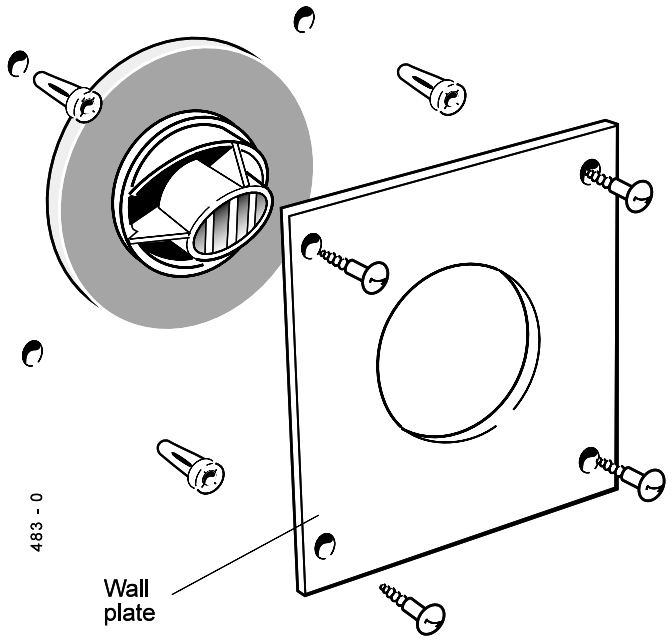

1. Position the terminal wall plate over the terminal.
2. Drill 4 fixing holes with a 7mm (1/4") masonry drill.
3. Insert the 4 plastic plugs provided in boiler h/ware pack.
4. Secure the plate with 4 of the No.10 x 2" screws provided in boiler h/ware pack.

Note. *If the terminal is less than 2m (6' 6") above ground level, an approved terminal guard should be fitted.*
Refer to 'Flue Installation', Page 7.

20 SIDE FLUE ASSEMBLY - Exploded View

1. An optional flue duct extension kit is required for wall thicknesses greater than:

   504mm (19 7/8") - LHS flue
   380mm (15") - RHS flue

   Refer to Frame 10.

2. When cutting the ducts always use the cardboard support cutting aid provided.

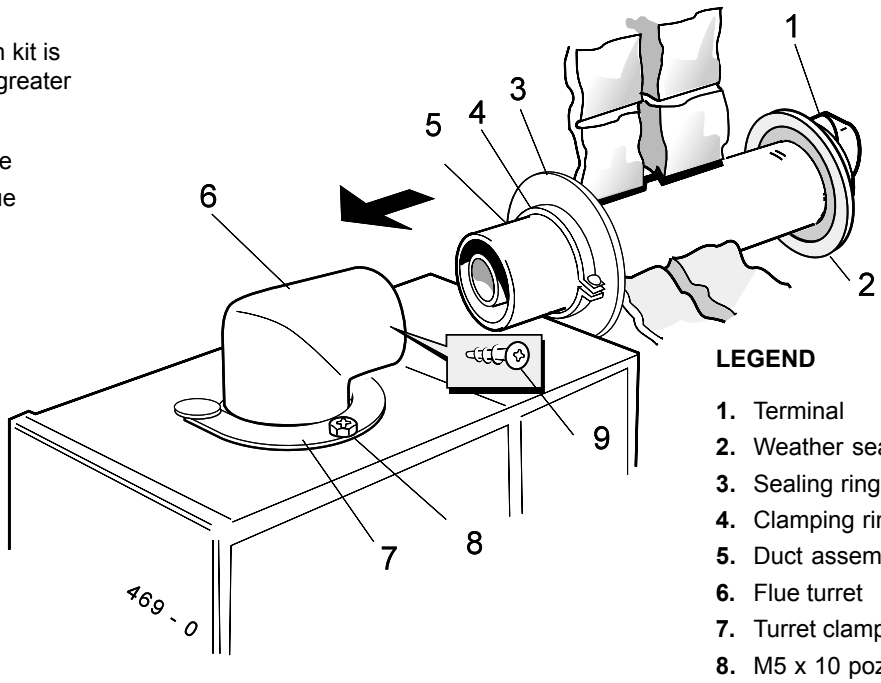

LEGEND

1. Terminal
2. Weather seal
3. Sealing ring
4. Clamping ring
5. Duct assembly
6. Flue turret
7. Turret clamp
8. M5 x 10 pozi-hex screw
9. No. 8 x 8 fixing screw

21 WALL MOUNTING TEMPLATE (Side Flue)

IMPORTANT.
For direct mounting (frame on wall) choose one black dot in each group.
If using the stand-off channels choose one circle in each group.
Use stand-off channels for the boiler to be flush with 300mm deep units.

Care MUST be taken to ensure the correct holes are drilled.

Note.

When marking off the flue allow for the stand-off channels if using them. Read the notes on the template.

1. Tape template into the selected position.
2. Ensure squareness by hanging a plumbline, as shown.
3. Mark onto the wall the following:
   a. The 6 wall mounting plate screw positions (choose one from each group).
   b. Extended the centre line as shown. Mark the flue duct centre from the corner (see diagram and template).

   Note. *Mark the centre of the hole as well as the circumference.*
4. Remove template from the wall.

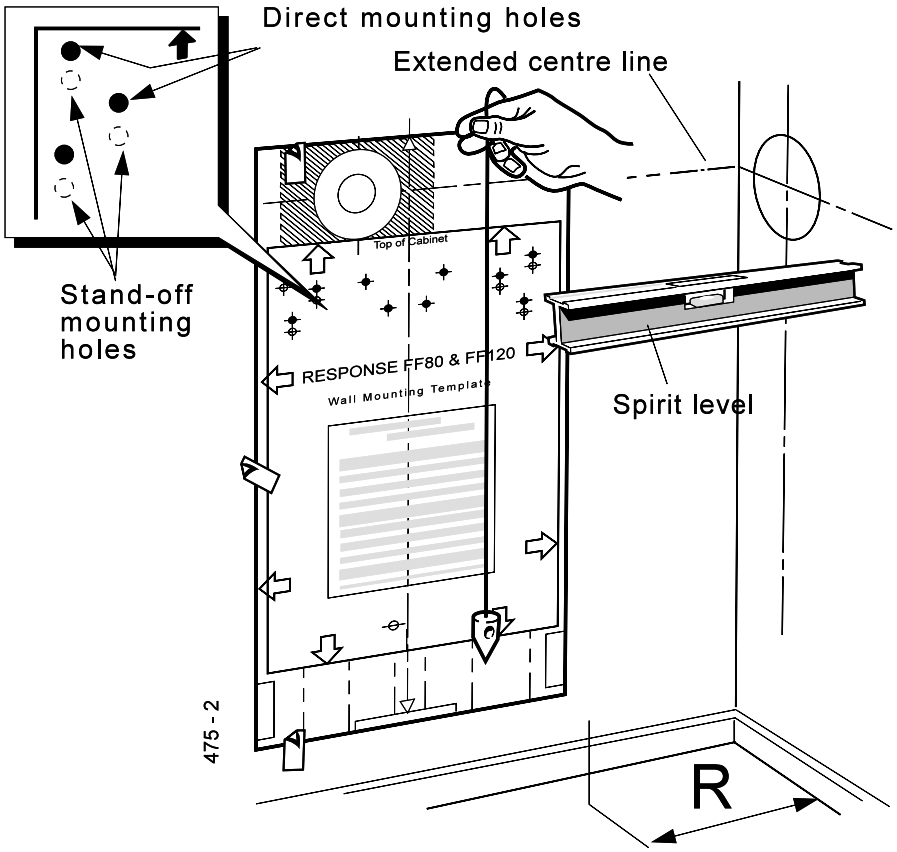

SIDE FLUE OUTLET

22 DRILLING THE WALL (Side Flue)

IMPORTANT. Ensure that, during the cutting operation, masonry falling outside the building does not cause damage or personal injury.

1. Cut the flue hole (preferably with a 5" core boring tool), ensuring that the hole is square to the wall.

   Both wall faces immediately around the cut hole should be flat.
2. Measure and note the wall thickness 'W'.
3. Drill 6 holes with an 8mm (5/16") masonry drill.

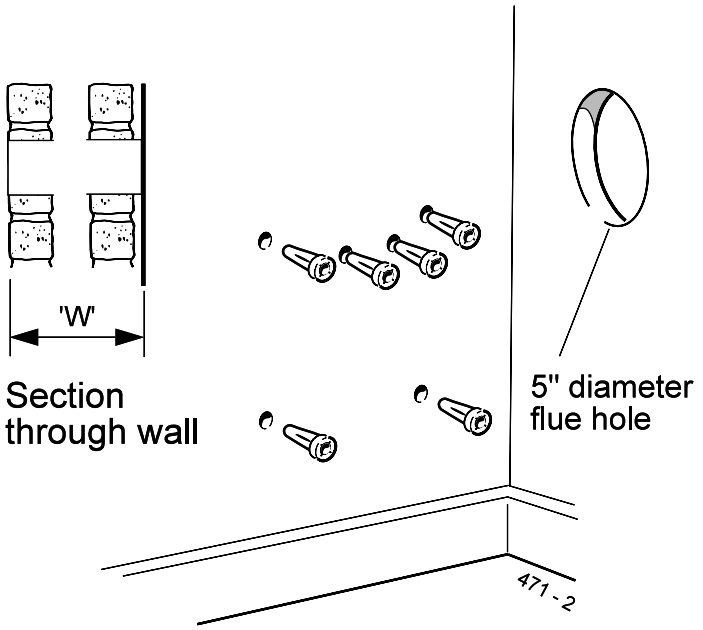

Note. *If the terminal is to be sited within 25-40mm of a corner or vertical pipe (refer to Table 3) then the hole MUST be accurately cut and the rubber weather seal trimmed around the groove provided. (The terminal wall plate need not be fitted.)*

23 FITTING THE WALL MOUNTING FRAME

Refer to Frame 34 for service connections.

Fit the wall mounting frame, either:

a. Directly to the wall

- Insert the wall plugs.
- Put the screws into the wall plugs and leave 10mm proud
- Hang the frame onto the screws and tighten up

or

Proceed to Frame 24.

Note. *If the clearances above and below the boiler are less than the length of the pipes it will be necessary to position the pipes behind the wall mounting plate BEFORE the plate is screwed to the wall.*

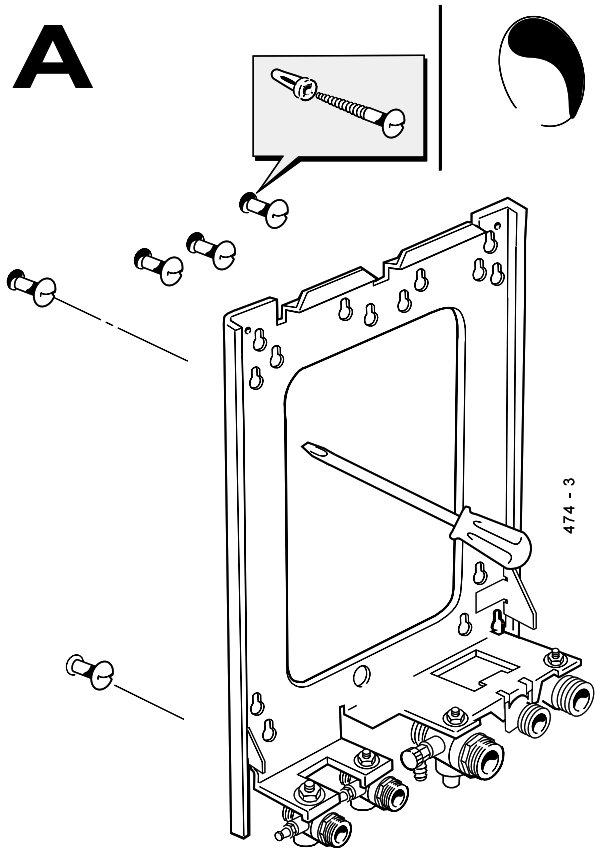

24 FITTING THE WALL MOUNTING FRAME - continued

or

b. Use stand-off channels
(To allow pipework to be taken upwards).

- Insert the wall plugs.
- Put the screws into the wall plugs and leave 10mm proud.
- Fasten each channel to the frame with the 6mm screws provided.
- Hang channels and frame onto the screws and tighten up.

Note. *If the clearances above and below the boiler are less than the length of the pipes it will be necessary to position the pipes behind the wall mounting plate BEFORE the plate is screwed to the wall.*

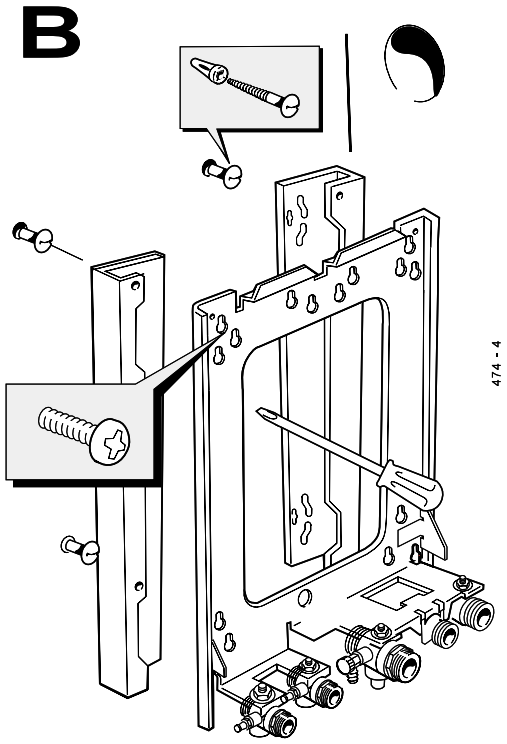

25 CUTTING THE FLUE TO LENGTH

Flues up to 600mm (23 5/8")

1. The flue cut length is calculated as detailed in Frame 10.
2. Measure from the groove and mark the tube.
3. To ensure the tube is cut square, mark the flue all the way round, using, e.g. a long straight strip of paper with its ends overlapped.
4. Cut to length, using the cardboard support aid.
5. Remove the cardboard support and any burrs.

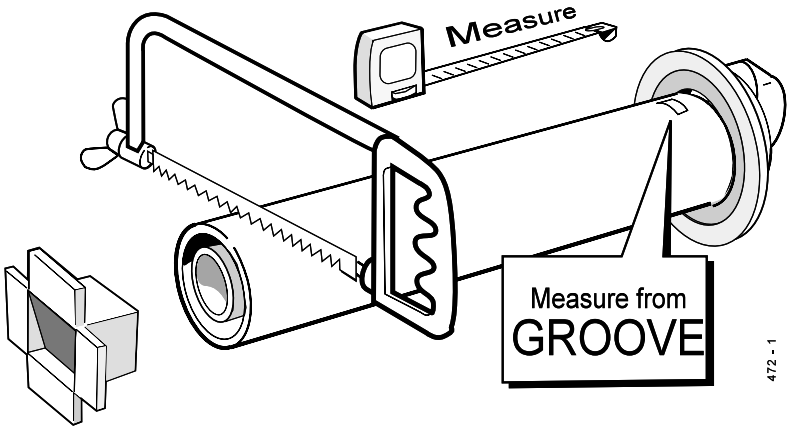

For flue lengths greater than 600mm refer to Frames 30 to 32 - Flue Extension Ducts

26 FITTING THE FLUE

1. Attach the clamping/sealing rings to the flue (this prevents the assembly being pushed right through the hole and causing an accident).
2. Pass the cut flue through the prepared hole, ensuring that the groove is uppermost.
3. Pull the flue back to compress the rubber seal and fix in place with the clamping/sealing rings.

Note.

*To facilitate turret fixing or removal do **NOT** make good the wall.*

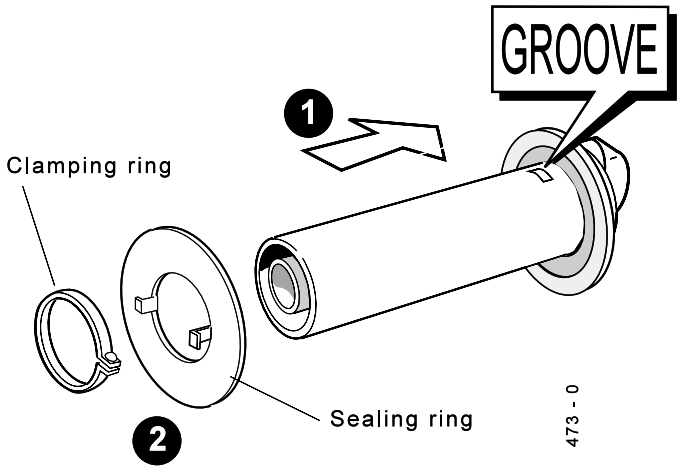

27 MOUNTING THE BOILER

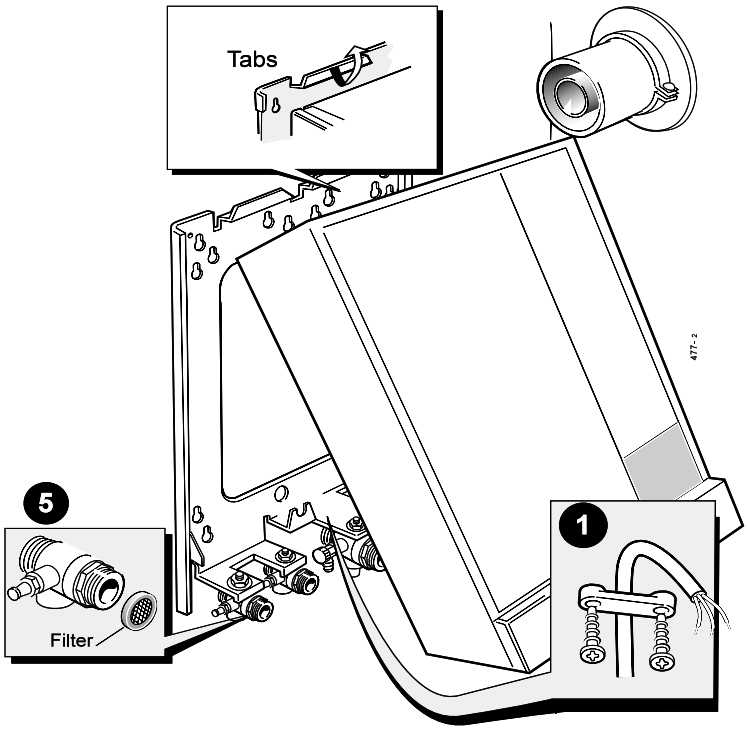

1. The boiler may be prewired to the loose electrical connector and secured with the cable clamps. Refer to Frame 39.
2. Lift the boiler onto the wall mounting frame, locating it over the tabs at the top of the frame.
3. Lower the boiler into position.
4. Remove plastic plugs and check that 'O' rings are in place (spare 'O' rings in the hardware pack).
5. Fit the filter to the DHW inlet valve as shown.

IMPORTANT. *This must not be omitted.*

6. Engage and tighten the 5 pipe unions.
7. Fix the pressure relief valve drain pipe to the pressure relief valve, using the nut and olive supplied in the hardware pack.

28 CONNECTING THE TURRET TO THE BOILER

1. Mate the turret to the flue.
2. Secure the flue turret on top of the boiler by inserting the open ends of the turret clamp under the 2 studs and fixing it in the middle with the single M5 x 10mm pozi-hex screw provided.

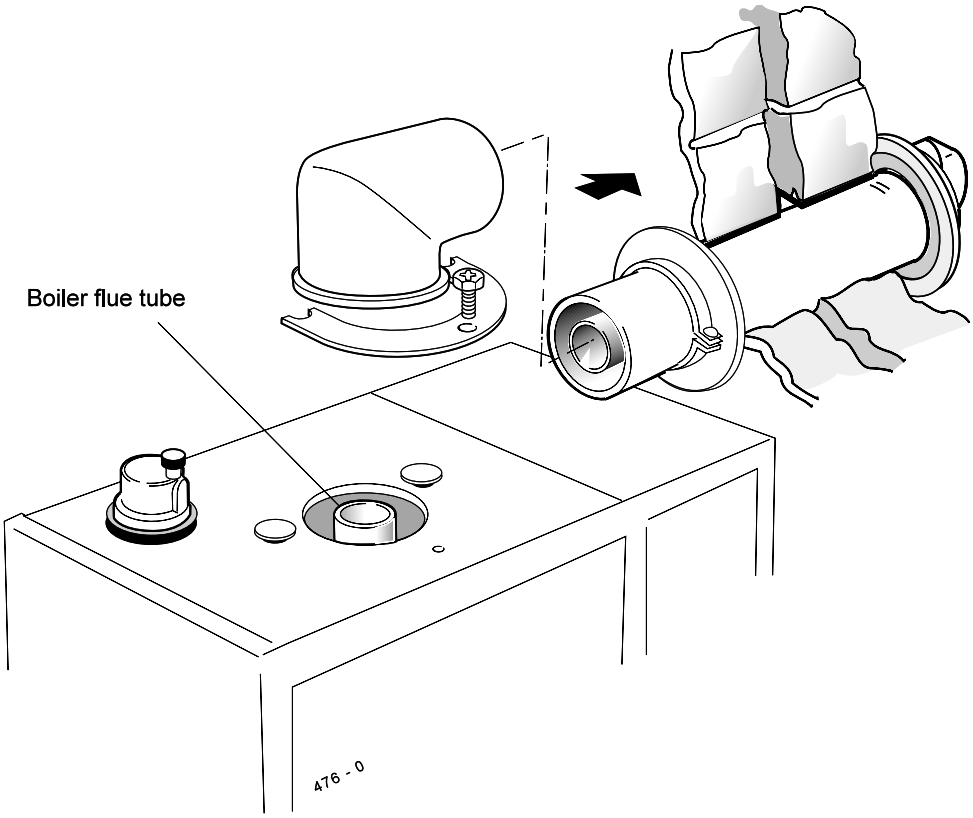

3. Drill a 3.2mm hole through the flue via the hole already present in the turret. Secure the turret to the flue, using the self tapping screw provided.
4. **Flues over 1 metre long.**

   Fix the flue support bracket to the wall, using the wall plug and wood screw.

   - For standard installations use the short wood screw.
   - If the 'stand-off' option is used secure the support bracket, using the spacer bracket and long wood screw.

29 TERMINAL WALL PLATE

This plate allows neat concealment and full compression of the rubber seal. It should be used (where practicable):

a. When the wall is more than 24" thick (to support the flue weight and prevent movement).

or

b. When the hole has not broken through neatly.

or

c. When the wall face is rough and the rubber seal on its own would be ineffective.

1. Position the terminal wall plate over the terminal.

2. Drill 4 fixing holes with a 7mm (1/4") masonry drill.

3. Insert the 4 plastic plugs provided in boiler h/ware pack.

4. Secure the plate with 4 of the No.10 x 2" screws provided in the boiler hardware pack.

Note. *If the terminal is less than 2m (6' 6") above ground level, an approved terminal guard should be fitted.*
Refer to 'Flue Installation', Page 7.

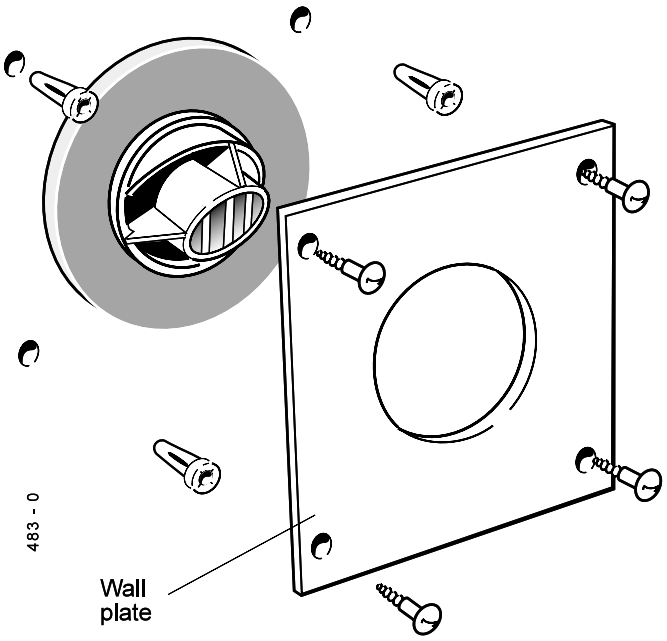

30 FLUE EXTENSION DUCT PACK D CONTENTS

Use a maximum of 2 extension ducts only.

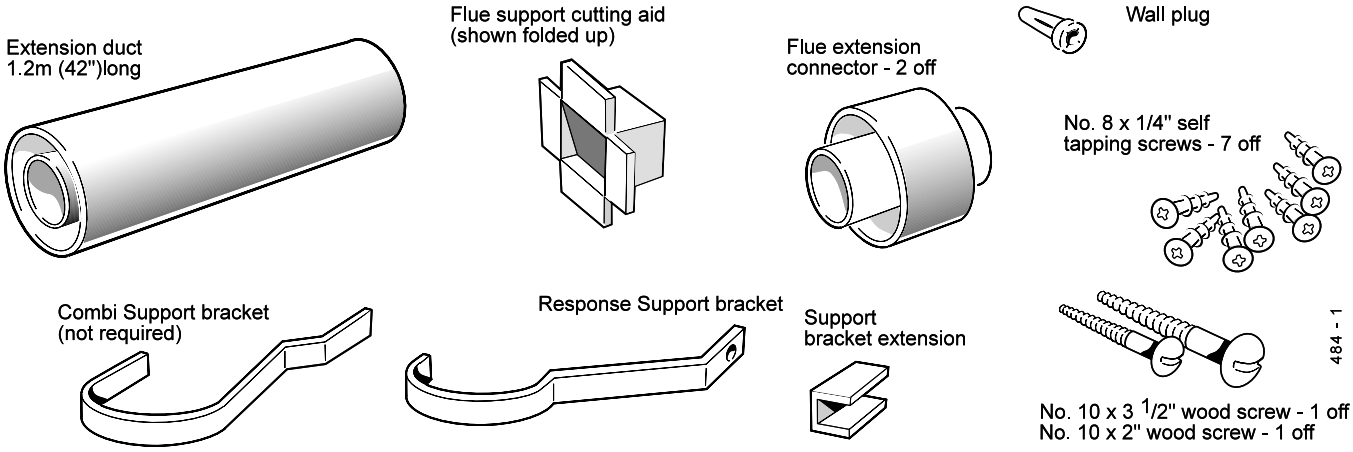

31 ASSEMBLING THE EXTENDED FLUE

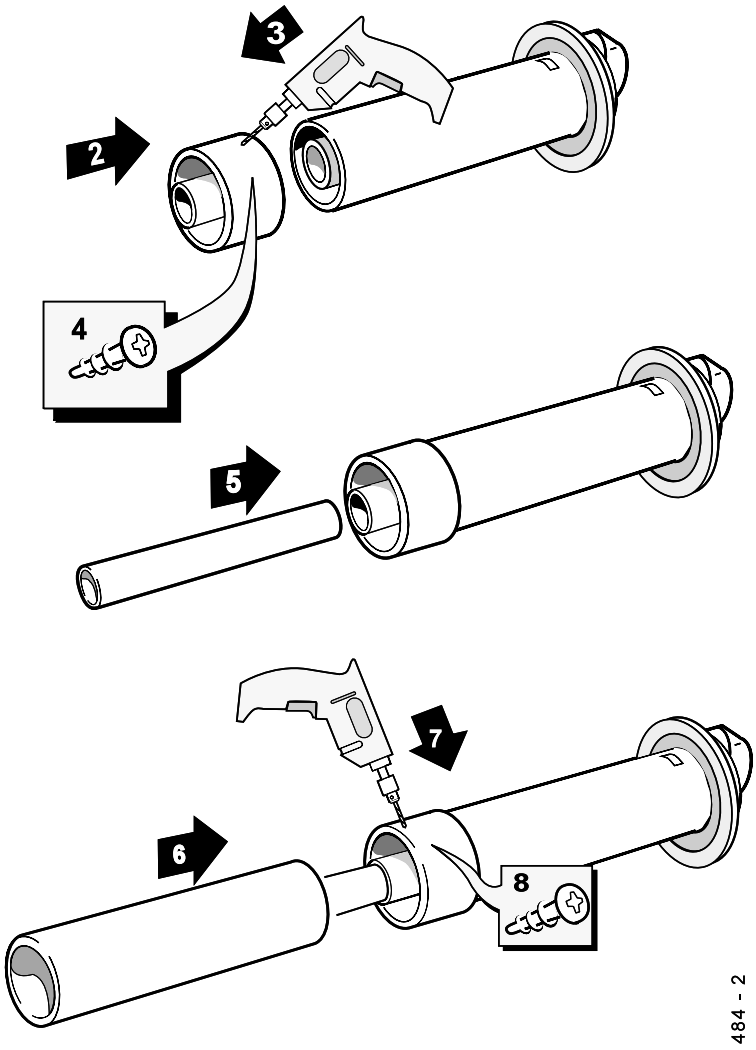

1. Remove the cardboard support aid from the flue and place safely to one side.
2. Fit the flue extension connector from Pack D on to the standard flue duct.
3. Drill three 3.2mm (1/8") dia. equally spaced holes through the flue connector and the outer flue duct. ***Do not drill the inner flue duct.***
4. Insert the self tapping screws provided, to fix the connector in position.
5. Fit the inner flue extension duct into the connector.
6. Fit the outer flue extension duct into the connector.
7. Drill three 3.2mm (1/8") dia equally spaced holes through the flue connector and the outer flue extension duct. ***Do not drill the inner flue duct.***
8. Insert the self tapping screws provided, to fix the connector in position.
9. Repeat steps 1 - 8 if a second flue extension is required.

32 CUTTING THE FLUE TO LENGTH

1. Check the flue length measurement made in Frame 10.
2. Use this dimension to mark the flue length, starting from the groove, as illustrated.
3. To ensure a square cut, mark the flue all the way round, using, e.g. a steel tape or paper strip with the ends overlapped.
4. Cut to length, using the cardboard support aid.
5. Remove the cardboard offcuts and deburr the metal edges.

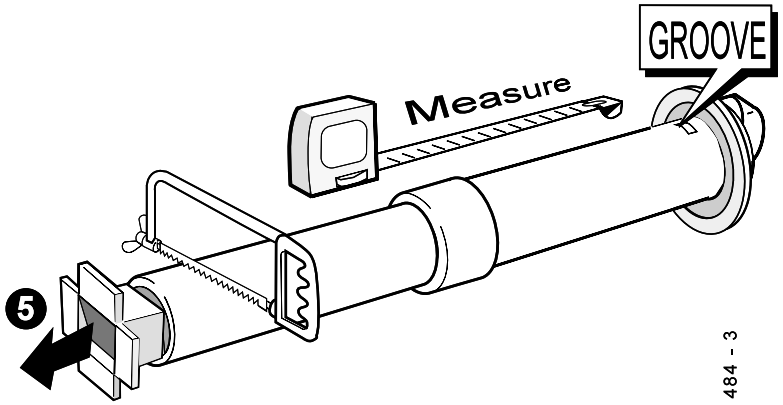

33 FIXING THE FLUE TO THE TURRET

1. Insert the flue into the prepared hole. Refer to Frame 26 for details.
2. Mate the flue to the turret. Refer to Frame 28 for details.

Note.
To facilitate turret fixing or removal do ***NOT*** *make good the wall.*

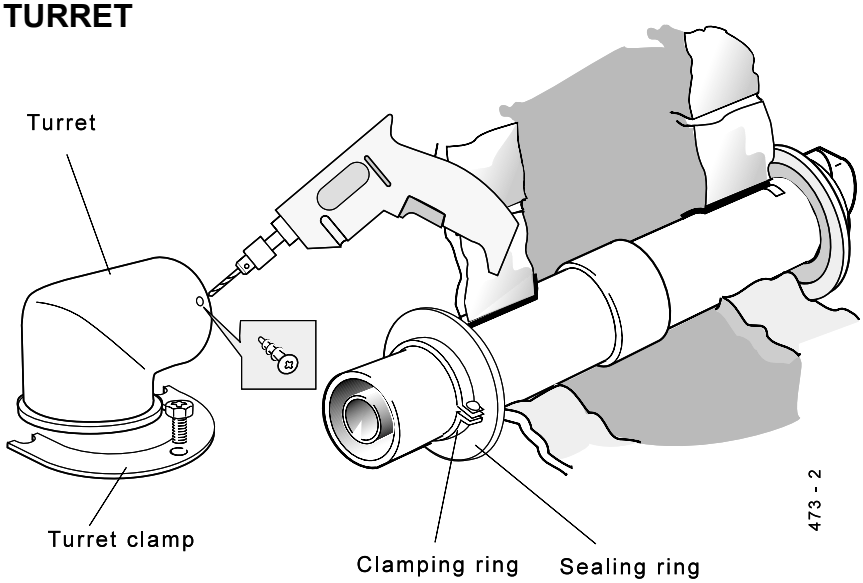

34 SERVICE CONNECTIONS

General Notes

1. As detailed in Frames 14 and 23/24 'Fitting the Wall Mounting Frame', top entry pipework is an option, as well as mounting from the bottom or through the wall.

   If pipes are run vertically within the boiler back space provided by optional stand-off channel positions they must avoid any obstructions imposed by the channels and by a rear facing flue, should this position be selected.

2. Horizontal connecting pipes, where used, must be run outside the limits of the boiler casing.

35 WATER CONNECTIONS

Refer to General Note, Frame 34, for guidance.

Note. *Do not subject any of the isolating valves to heat as the seals may be damaged .*

CH CONNECTIONS

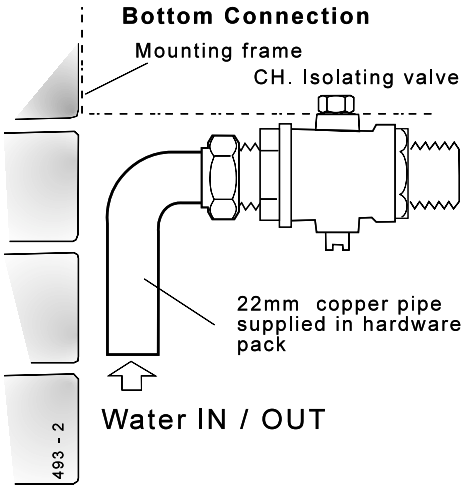

For top connections: reverse 22mm pipe.

DHW CONNECTIONS

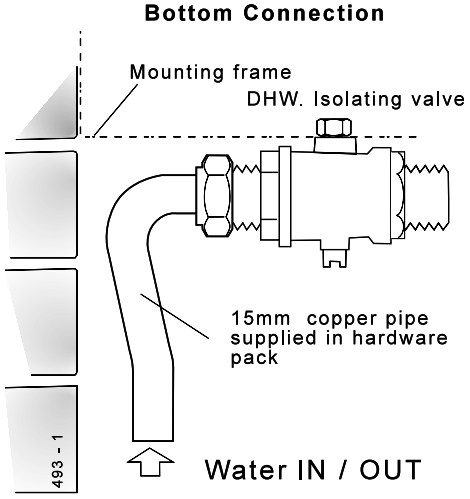

For top connections: use 15mm straight pipe and elbow (not supplied).

36 GAS CONNECTION

Refer to General Note, Frame 34, for guidance.

Bottom connection

1a. Solder the 1/2" connector and reducing coupling to the preformed pipe provided ***OR:***

Top connection - suggested method

1b. Solder the 1/2" connector and reducing coupling to straight pipe and elbow not provided.

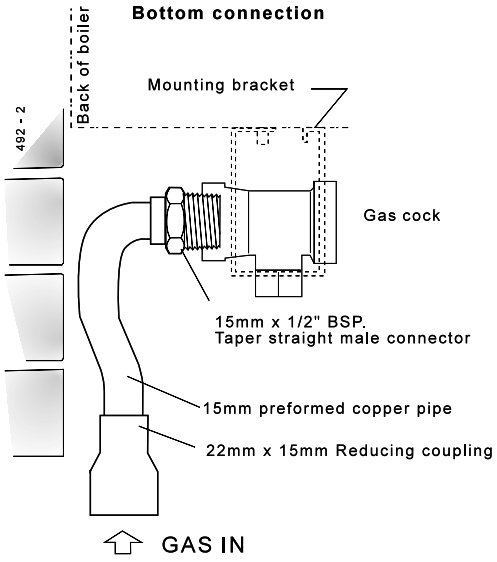

Bottom and Top connections

2. Remove the gas cock bracket complete with gas cock.

3. Screw connector into gas cock in the correct orientation.

4. Screw complete assembly back onto the mounting frame.

Extend a gas supply pipe of not less than 22mm O.D. copper or 3/4" BSP iron to the boiler.

A working gas pressure of 20mbar (8" w.g.) must be available at the boiler inlet with the boiler firing at full DHW output.

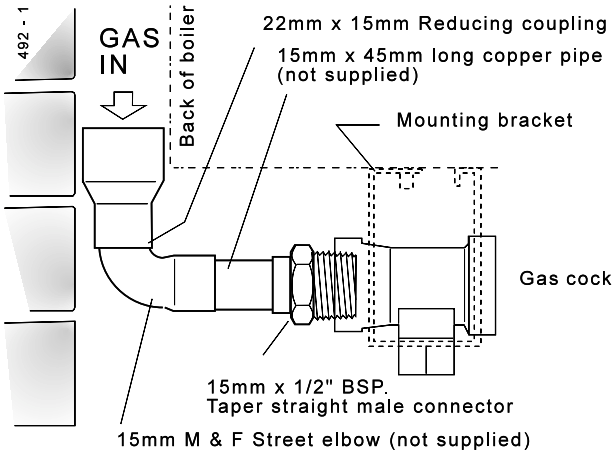

37 SAFETY VALVE DRAIN

The discharge pipe should be positioned so that the discharge of water or steam cannot create a hazard to the occupants of the premises or damage to electrical components and wiring.

38 ELECTRICAL CONNECTIONS

WARNING. This appliance MUST be efficiently earthed

A mains supply of 230 V ~ 50 Hz is required.

All external controls and wiring MUST be suitable for mains voltage. Wiring should be 3 core PVC insulated flexible cord NOT LESS than 0.75 mm^2 (24 x 0.2mm) and to BS. 6500, Table 16. *(0.5mm^2 flex is NOT acceptable - for mechanical, not electrical - reasons.)*

Wiring external to the boiler MUST be in accordance with the current I.E.E. (BS7671) Wiring Regulations and any local regulations.

The supply connection is intended to be made via a double pole switch, having a 3mm (1/8") contact separation in both poles, serving only the boiler and system controls. A 3-pin UNSWITCHED socket may, alternatively, be used.

The fuse rating should be 3 A.

39 INTERNAL WIRING

Note. *If the programmer kit is to be fitted, refer to the instructions provided with the kit, and Frame 40.*

A pictorial wiring diagram is shown in Frame 40.

1. Ensure a length of 200mm between the wall and the connector. Fix the cable(s) to the mounting frame with the clamp(s).
2. Wire the mains cable into the connector terminal strip (supplied in the hardware pack).
3. Offer the connector to its mating half inside the boiler. Secure the connector to the panel with the screw.

Incoming mains wiring detail

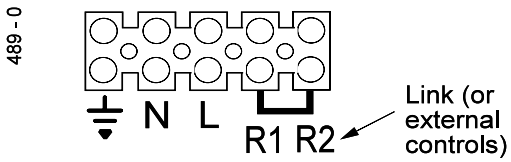

Mains terminal strip

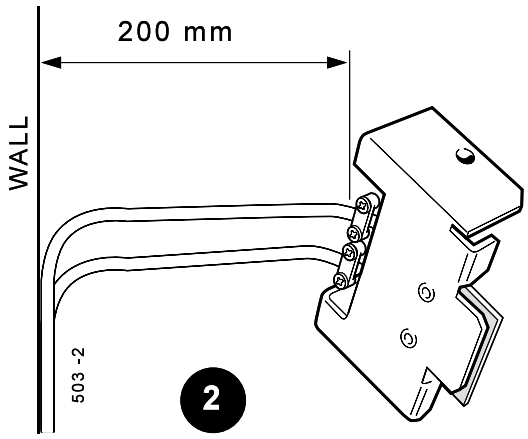

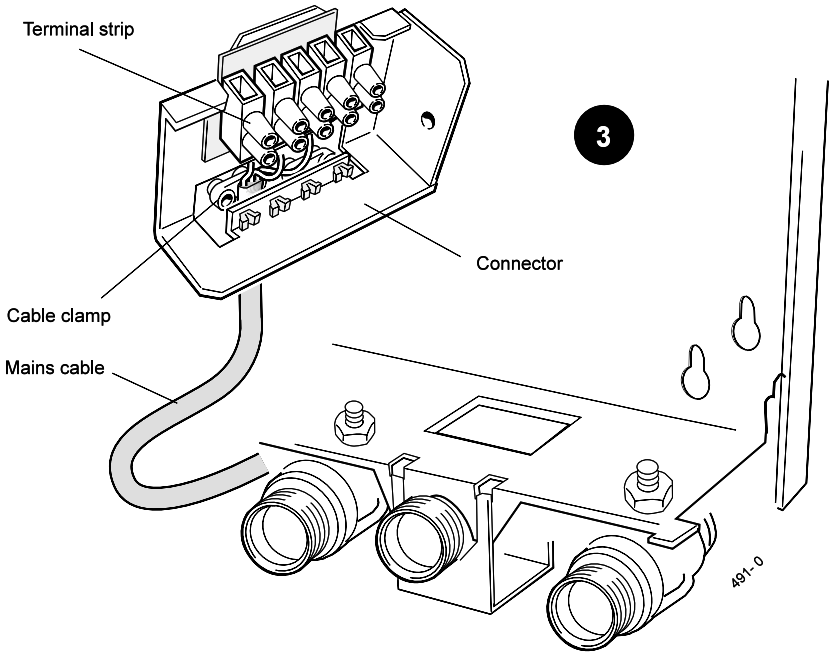

Note. *Ensure that the lengths of the current conductors are shorter than the earth conductor so that if the cable slips in its anchorage the current carrying conductors become taut before the earth conductor.*

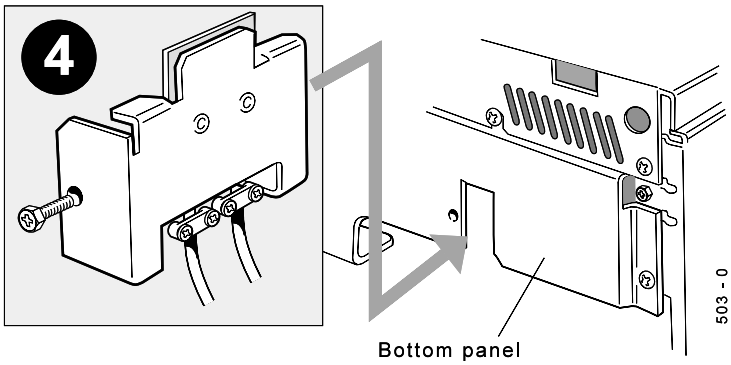

40 PICTORIAL WIRING

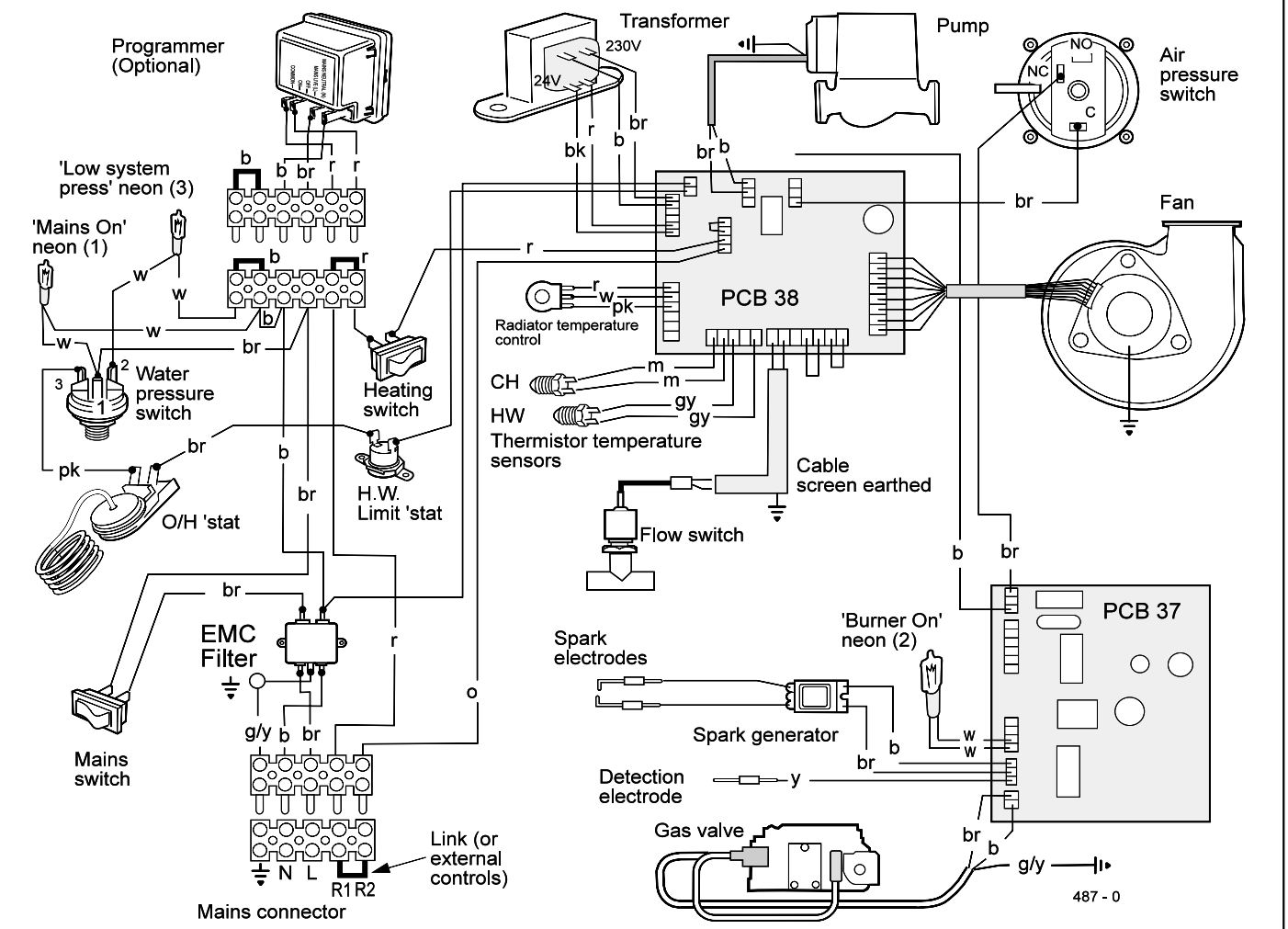

LEGEND

b	-	blue	**br**	-	brown	**o**	-	orange	**y**	-	yellow	**pk**	- pink
bk	-	black	**r**	-	red	**w**	-	white	**m**	-	mauve	**gy**	- grey

g/y - green/yellow

41 FUNCTIONAL FLOW WIRING DIAGRAM

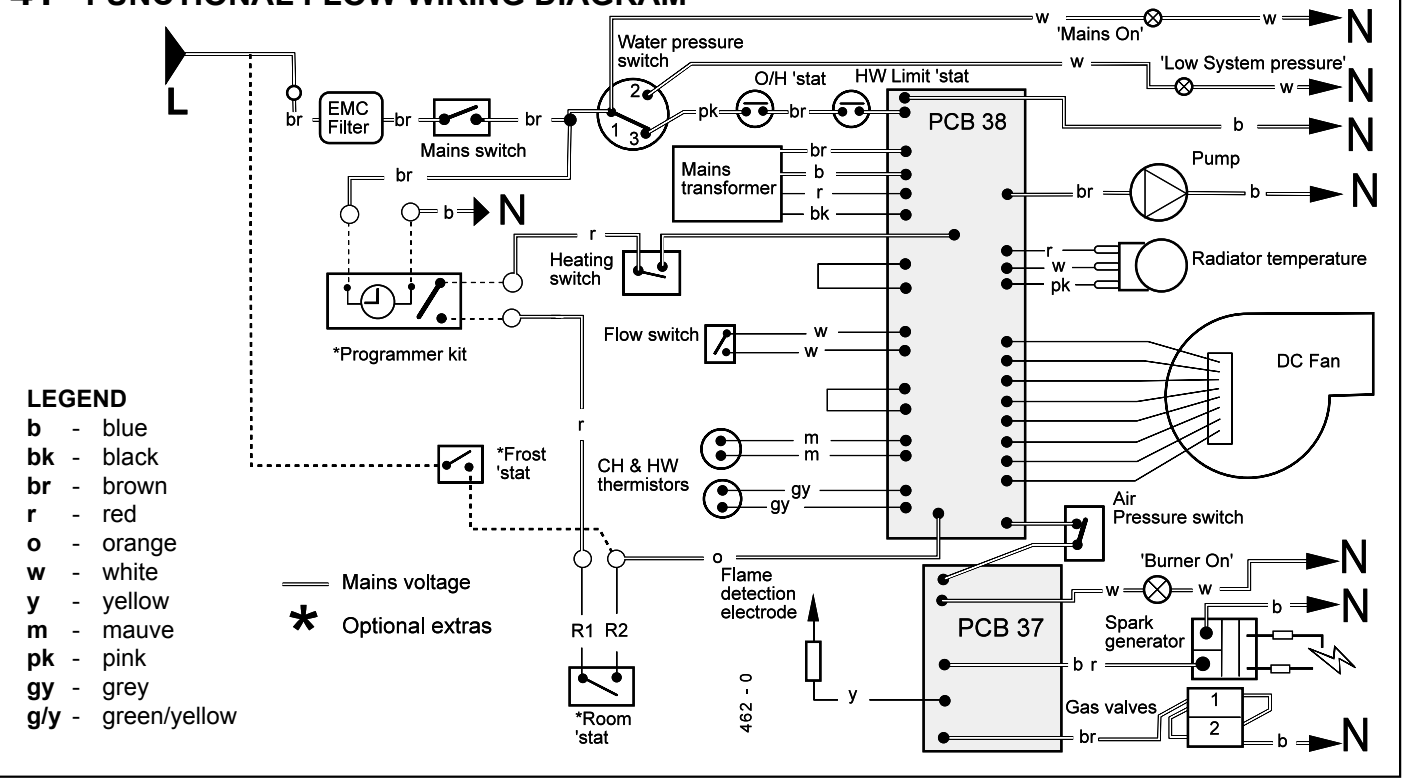

LEGEND

- **b** - blue
- **bk** - black
- **br** - brown
- **r** - red
- **o** - orange
- **w** - white
- **y** - yellow
- **m** - mauve
- **pk** - pink
- **gy** - grey
- **g/y** - green/yellow

Mains voltage

* Optional extras

42 EXTERNAL ELECTRICAL CONTROLS

External wiring must be in accordance with the current I.E.E. (BS.7671) Wiring Regulations.

Ideal Programmer Kit

This is supplied with its own instructions.

External Programmers

These should be of the single channel type (as this boiler does not incorporate a pre-heat facility for the instantaneous hot water service).

Programmer only - see Diagram A.

Programmers with room thermostat - see Diagram C.

Room Thermostat

This should be wired as shown in diagrams B &C. If the thermostat has a neutral connection, use it (it provides for more energy efficient operation by reducing switching temperature differentials).

Frost Protection

Central heating systems fitted wholly inside the house do not normally require frost protection as the house acts as a 'storage heater' and can normally be left at least 24 hours without frost damage.

However, if parts of the pipework run outside the house or if the boiler will be left off for more than a day or so then a frost thermostat should be wired into the system. This is usually done at the programmer, in which case the programmer selector switches are set to OFF and all other controls MUST be left in the running position.

The frost thermostat should be sited in a cold place but where it can sense heat from the system.

Wiring should be as shown, with minimal disturbance to other wiring of the programmer.

Diagram B shows an application to boilers fitted with the **Ideal Programmer Kit**

Diagrams A & C show applications to boilers fitted with alternative time controls.

Designation of the terminals will vary but the programmer and thermostat manufacturers' leaflets will give full details.

Note.
If the boiler is installed in a garage it may be necessary to fit a pipe thermostat, preferably on the RETURN pipework.

Earths are not shown for clarity but must never be omitted.

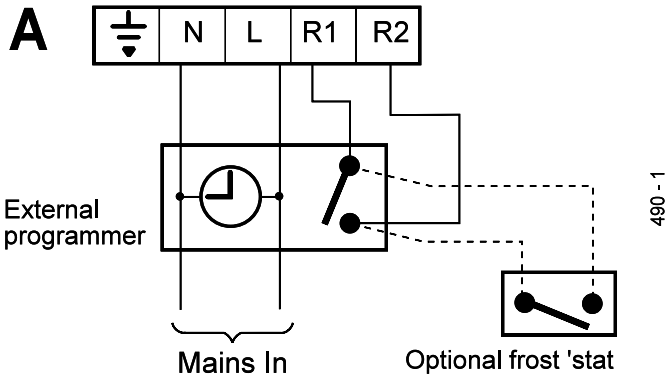

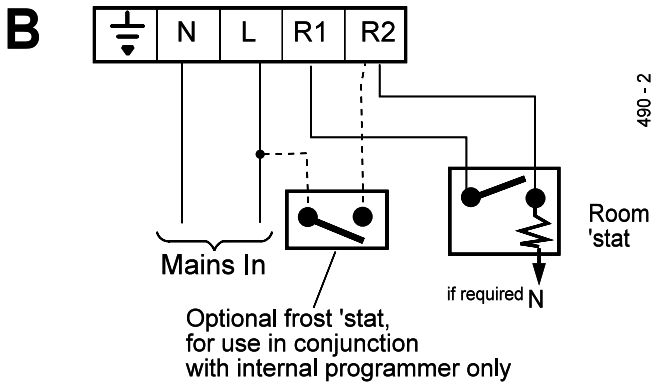

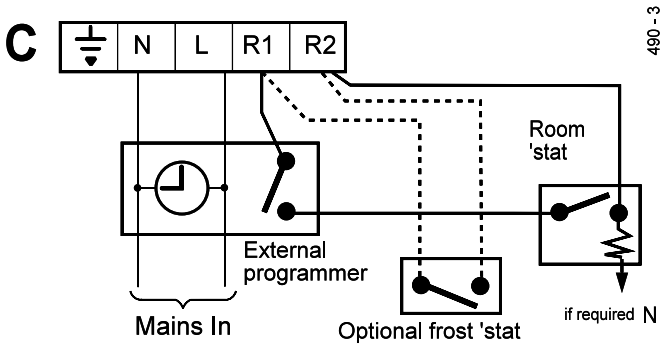

N.B. These diagrams are schematic only and do not show external terminal strips etc.

43 COMMISSIONING AND TESTING

A. ELECTRICAL INSTALLATION

1. Checks to ensure electrical safety should be carried out by a competent person.
2. ALWAYS carry out the preliminary electrical system checks, i.e. earth continuity, polarity, resistance to earth and short circuit, using a suitable test meter.

B. GAS INSTALLATION

1. The whole of the gas installation, including the meter, should be inspected and tested for soundness and purged in accordance with the recommendations of BS. 6891.
2. Purge air from the gas installation by loosening the gas cock union and purge until gas is smelled.
3. Retighten the union and test for gas soundness.

WARNING. Whilst effecting the required gas soundness test and purging air from the gas installation, open all windows and doors, extinguish naked lights and DO NOT SMOKE.

44 INITIAL LIGHTING

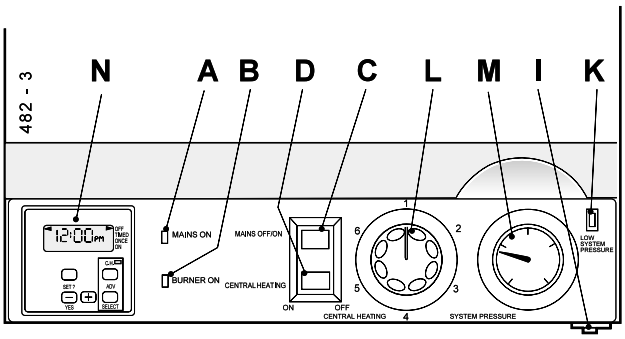

The illustration is shown with the control door removed.

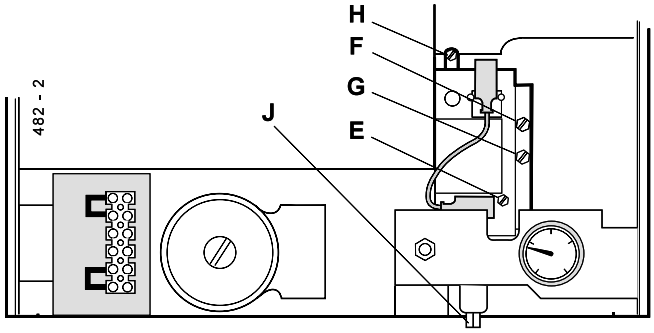

The illustration is shown with the control & front panel removed.

LEGEND

A 'Mains on' neon.
B 'Burner on' neon.
C Boiler (on/off) switch.
D Heating switch.
E Burner pressure test point.
F Signal pressure test point (Lo).
G Signal pressure test point (Hi)-fan.
H Working inlet pressure test point.
I Overheat thermostat reset button.
J Gas service cock.
K Low system pressure neon.
L Heating control knob.
M Pressure gauge.
N Programmer Display (optional).

IMPORTANT.

Before lighting the boiler you should note especially that:

a. To extract maximum heat from the boiler, a 2 minute pump overrun period occurs after each heating cycle (unless immediately followed by DHW draw off).

b. During this period the boiler *will not restart for CH*, even if the room thermostat is calling - this prevents short cycling and thus is more efficient.

c. The 2 minute period can be curtailed by running a hot tap for a few seconds or turning the mains off briefly.

d. At the end of each period of DHW draw-off the pump will run for few seconds, to extract the residual heat from the heat exchanger.

e. Provided that the mains supply switches are left ON, the pump will run for at least 30 seconds each day (even if neither CH nor DHW is in use), as a self-checking measure.

1. Check that all the drain cocks are closed and any valves in the flow and return are open. Open the dust cap on the auto air air vent (see page 4) by one turn.

2. Check that the system has been filled and pressurised (see table 6) and that the boiler is not air locked.

3. Check that the overheat thermostat (I) is calling for heat - press the reset button.

4. Remove boiler front panel - refer to Frame 48.

5. Remove the screw in the burner pressure test point (E) located behind the lower front panel - and connect a gas pressure gauge via a flexible tube.
Be sure to select the correct pressure test point. Refer to Tables 2 & 3 on page 3 for pressures.

6. Check that the gas service cock (J) is ON.

7. Switch the electricity supply ON and check that all external controls are calling for heat.

8. Set the boiler (on/off) switch (C) and the heating switch (D) to 1. Following a pre-purge period the gas control solenoid valve should open and the spark commence, continuing until the burner is established.

9. Check that the burner lights smoothly and that the 'Burner on' neon (B) illuminates. If this does not occur within 20 seconds, turn the on/off switch to OFF, wait for 5 seconds then try again. If the burner still does not light, refer to the 'Fault Finding' section.

10. Test for gas soundness around ALL boiler gas components, using leak detection fluid.

11. Operate the boiler for 10 minutes to stabilise the burner temperature.

12. The burner pressure is regulated by the gas valve according to the air flow produced by the fan. ***It is NOT user-adjustable*. Any interference to sealed settings on the gas valve will adversely affect operation and render our warranty void.**

However you should check that the inlet presssure (test point H) is at least 18 mbar **when the boiler is firing.**

13. Set the boiler (on/off) switch (C) to 0.

14. Remove the pressure gauge and tube. Replace the sealing screw in the pressure test point. Ensure a gas tight seal is made.

15. Refit the boiler front panel, using the screw previously removed.

16. Switch the boiler on again.

45 GENERAL CHECKS

Make the following checks for correct operation:

1. **Hot water:**
   - **a.** Fully open all DHW taps in turn and ensure that water flows freely from them.
   - **b.** Close all taps except the furthest one from the boiler and check that the boiler is firing at maximum rate.
   - **c.** Use a screwdriver to turn the DHW flow adjuster ***clockwise*** to reduce the DHW flow rate until a DHW temperature of approximately 35°C rise is obtained at the tap. This corresponds to a flow rate of about 9.6 l/min. (2.1 gpm).
   - **d.** Turn off the DHW tap.
2. **Central heating:**
   Operate each control separately and check that the main burner or circulating pump, as the case may be, responds.
3. **Gas rate:**

   Check the boiler gas rate when the boiler is at full output (i.e. serving HW at a flow rate of at least 8 litres per minute, open more than one tap if necessary).

   The gas rate will normally be between 43.1 and 47.7 litres per minute (1.52 to 1.68 cu/ft min.), checked at the gas meter, with no other appliance in use. If this check is not possible, ensure that the burner pressure lies in the range 13.3 to 16.4 mbar). These figures apply at the nominal UK mains voltage of 230V: if the voltage is significantly higher, the fan will speed up slightly and cause the gas valve to pass slightly more gas. Conversely, very long flues reduce the air flow, and gas rate, slightly.
4. **Water circulation system:**

   Note. *Fernox Superfloc flushing solution should be used during the flushing procedure.*

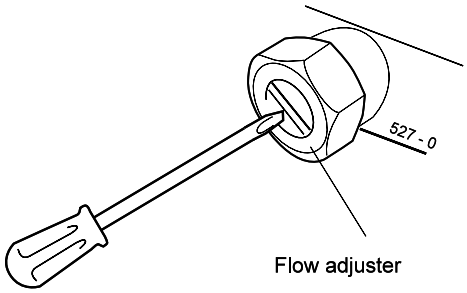

   - **a.** With the system HOT examine all water connections for soundness.
   - **b.** With the system still HOT, turn off the gas, water and electricity supplies to the boiler and drain down, to complete the flushing process.
   - **c.** Refill the system, adding inhibitor (see 'Water Treatment'), if required.

     Vent as necessary to clear all air and, again, check for water soundness. After venting, repressurise as required.
   - **d.** Balance the system.

     It is suggested that, initially, all radiator handwheel valves (or TRVs if fitted) be set fully open, that all lockshield valves be set a half-turn open and the bypass a half-turn to one turn open (a minimum of one turn open is recommended when TRVs are used.)

     Make minor adjustments to each radiator to achieve the same differential on all.

     Lastly, set the bypass to eliminate any boiler noise, without compromising radiator temperatures.
5. Finally, set the system controls to the user's requirements.

If an optional programmer kit is fitted refer to the instructions supplied with the kit.

46 HANDING OVER

After completing the installation and commissioning of the system, the installer should hand over to the householder by the following actions:

1. Hand the User's Instructions to the householder and explain his or her responsibilities under the Gas Safety (Installation and Use) Regulations 1994.
2. Draw attention to the Lighting Instruction label affixed to the inside of the lower front door.
3. Explain and demonstrate the lighting and shutting down procedures.
4. The operation of the boiler and the use and adjustment of ALL system controls should be fully explained to the householder, to ensure the greatest possible fuel economy consistent with household requirements of both heating and hot water consumption.
5. Advise the user of the precautions necessary to prevent damage to the system and to the building, in the event of the system remaining inoperative during frosty conditions.
6. If a programmer kit is fitted, draw attention to the Programmer Kit User's Instructions and hand them to the householder.
7. Stress the importance of regular servicing by a CORGI registered installer and that a comprehensive service should be carried out AT LEAST ONCE A YEAR.
8. **Emphasise to the user** that the boiler may stop working if the system pressure is lowered by draining radiators to decorate behind them. In particular, explain to the user how the domestic hot water temperature varies with flow rate. This is especially important when water is drawn off while the boiler is already running for central heating (refer to 'CAUTION' in User's Instructions, page 2).

47 SERVICING SCHEDULE

To ensure the continued safe and efficient operation of the appliance it is recommended that it is checked at regular intervals and serviced as necessary. The frequency of servicing will depend upon the installation condition and usage but should be carried out at least annually. It is the law that any service work must be carried out by a registered CORGI installer.

1. Turn the heating controls to maximum so that the boiler lights and remains running. Check that no other gas appliances in the house are in use or likely to be used.
2. When the boiler has settled down check the gas rate at the meter (if the meter is of the pointer type you should time only complete revolutions of the pointer). Check the gas rate against the figures given in Table 1 for CH operation.
3. Fully open a hot water tap. The pump should stop as the boiler switches to HW mode. When the boiler has settled down check the gas rate, as in step 3, checking the measured rate against the figures given in Table 1 for HW operation.
4. Check the percentages of CO and CO_2 in the flue gases at the sampling point provided - Frame 48.

   Note. *If your meter reads CO in parts per million the figure must be divided by 10,000 to convert it to a percentage.*

   If the ratio of CO/CO_2 is less than .004 and the gas rates measured in steps 3 and 4 are close to nominal then no further action need be taken. If not, proceed to step 6.
5. Clean the main burner.
6. Clean the heat exchanger.
7. Check the main injector for blockage or damage.
8. Check that the flue terminal is unobstructed.

The servicing procedures are covered more fully in Frames 48 to 54 and MUST be carried out in sequence.

WARNING.

ALWAYS turn off the gas supply at the gas service cock, and switch off and disconnect the electricity supply to the appliance before servicing.

Switching the boiler on/off switch 'off' when a frost thermostat is wired directly from the mains may leave a live feed to the boiler.

ALWAYS test for gas soundness and carry out functional checks on reassembly.

IMPORTANT. When work is complete the boiler inner front sealing panel MUST be correctly refitted, making a good seal.

DO NOT OPERATE THE BOILER IF THE SEALING PANEL IS NOT FITTED.

48 BOILER SEALING PANEL REMOVAL

1. Turn off the gas supply at the gas service cock and disconnect the electricity supply.
2. Remove the screw and lift off the boiler front panel.
3. Remove the screws and pull out the tabs from the slots.

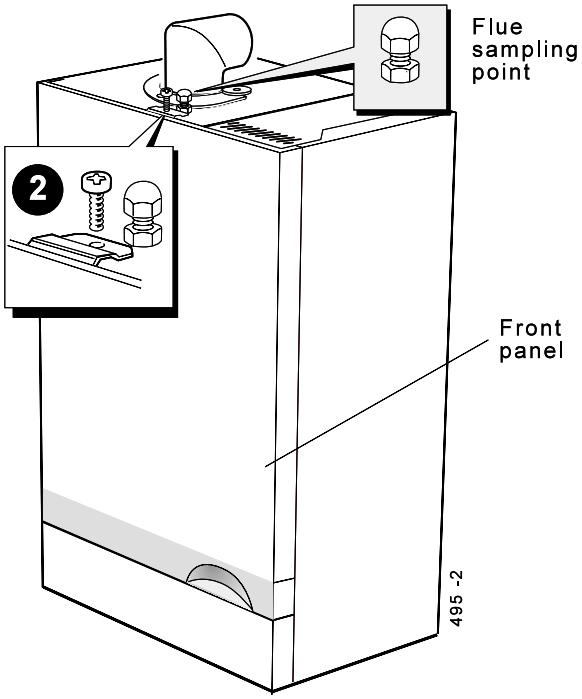

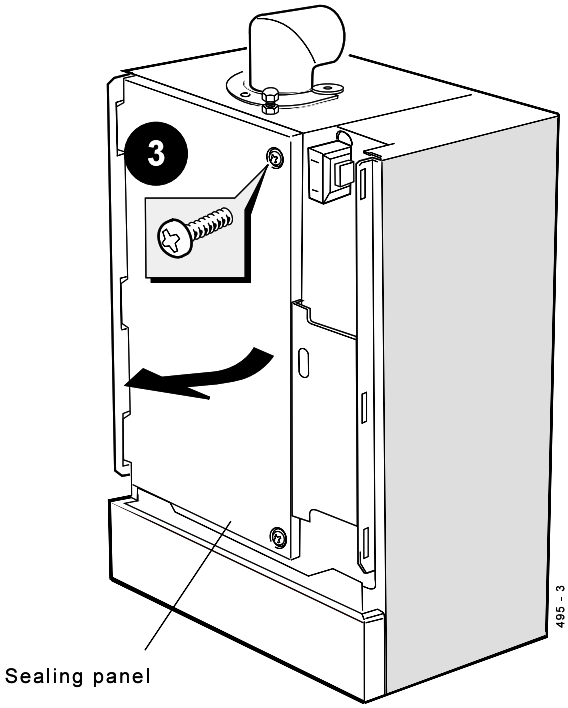

49 FAN REMOVAL AND CLEANING

1. Disconnect the electrical harness from the fan.
2. Disconnect the pressure sensing pipe from the fan, as follows:
   a. Undo the 2 screws securing the pipe to the fan.
   b. Undo the 2 screws securing the pipe clamping plate to the manifold block.
   c. Withdraw the clamping plate.
   d. Withdraw the pipe from the boiler.
3. Rotate the fan body to the right, to disengage the bayonet fixing on the fan outlet.
4. Withdraw the fan with the 'O' ring seal.
5. Check that the fan impeller runs freely. Clean with a soft brush or renew as necessary. Refer to Frame 66 for replacement.

Note. *Always take care when handling the fan, in order to preserve the balance of the impeller.*

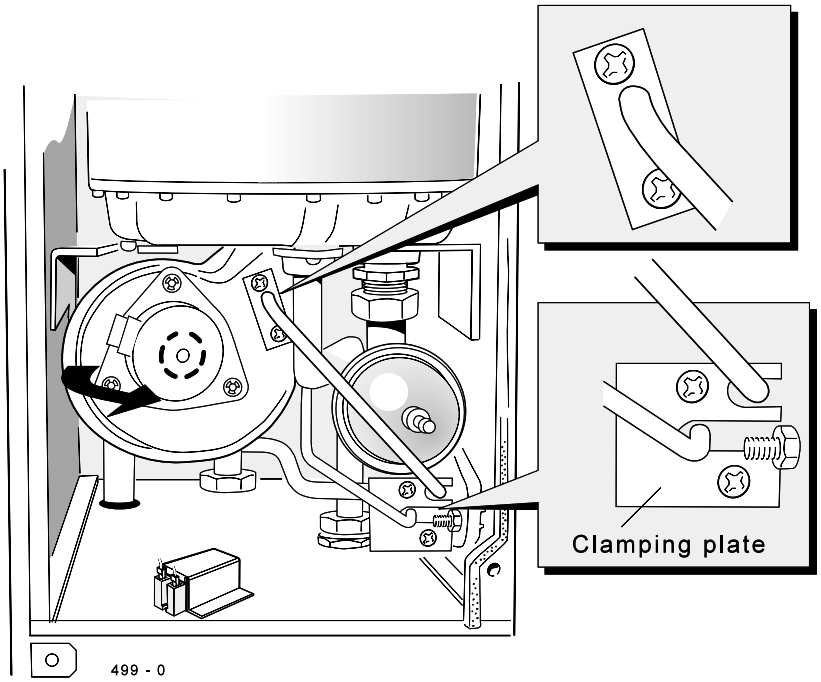

50 BURNER REMOVAL AND CLEANING

1. After removing the fan, as already described, disconnect the 2 ignition leads and one detection lead from the electrodes.
2. Disconnect the pressure sensing pipe from the burner. Pull the pipe downward to disengage it from the burner mounting plate. Cover the sensing ports of the gas valve to prevent entry of foreign matter.

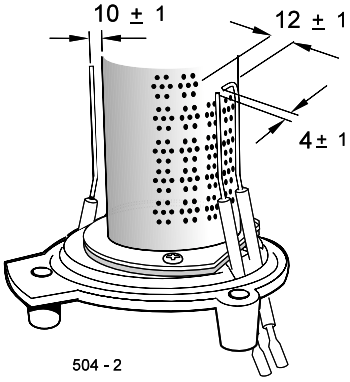

3. Undo the 3 fixing screws securing the burner assembly.
4. Withdraw the burner assembly downward and out of the heat exchanger.
5. Brush off any deposits that may have collected on the burner, ensuring that the flame ports are unobstructed. **Note.** *Brushes with metallic bristles MUST NOT be used.*

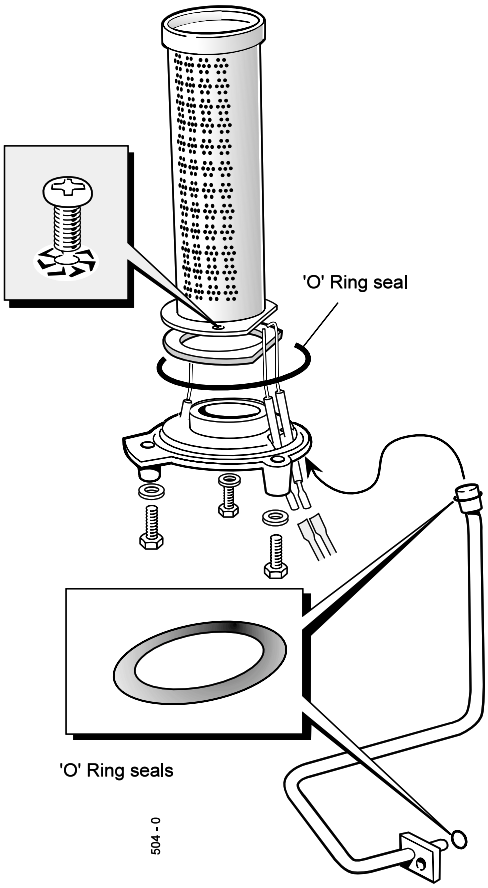

6. Inspect the spark and detection electrodes. Ensure they are clean and in good condition - replace if necessary.
7. Check the spark and electrode gaps are correct.
8. Check that the spark and detection leads are in good condition and renew as necessary

51 CLEANING THE HEAT EXCHANGER

1. Place a plastic sheet or similar beneath the boiler and remove all visible loose deposits from the heat exchanger fins, using a suitable brush.
2. Take care to clean debris from the ledge inside the combustion chamber.

52 INLET FILTER CLEANING

The filter comprises a gauze disc in a synthetic rubber carrier ring. It is secured at the front (outlet) of the cold water isolating valve by means of the union connection between the valve and the boiler inlet pipe work. To access the filter, proceed as follows:

1. Close the cold water inlet valve below the boiler. Ensure the markings are as shown.
2. Open a hot tap to relieve the pressure in the expansion vessel and pipework.
3. Drain using the valve nipple.
4. Undo the union connection referred to above, and remove the filter disc.
5. Clean (or renew) the filter disc. Re-assemble in reverse order.

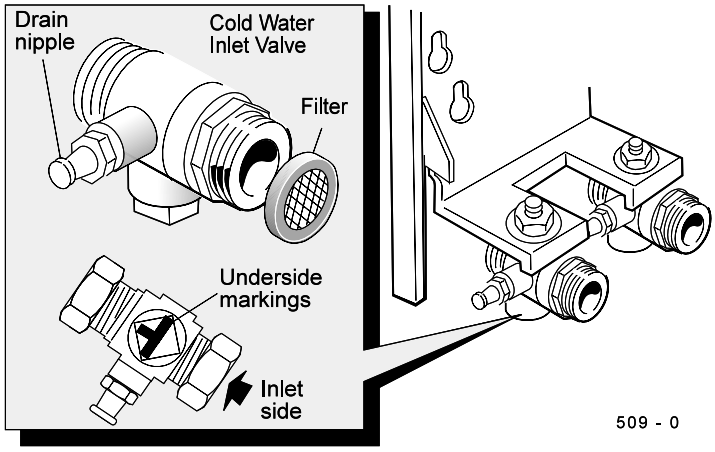

53 RE-ASSEMBLY

Re-assemble the boiler in the following order:

1. Refit the burner, renewing any damaged or deteriorating sealing gaskets.
2. Reconnect the 2 ignition leads and the detection lead.
3. Reconnect the pressure sensing pipe to the burner.
4. Ensure that the fan 'O' ring seal is in place then refit the fan, engaging it in the bayonet fixing and locating it in the retaining bracket.
5. Reconnect the pressure sensing pipe to the fan and secure both pipes to the manifold block with the clamping plate.
6. Reconnect the fan electrical harness.
7. Refit the boiler sealing panel.

   IMPORTANT. Ensure the boiler sealing panel is correctly fitted and that a good seal is made.
8. Refit the boiler front panel.
9. Turn on the gas supply at the gas service cock.
10. Reconnect the electrical supply.

54 BURNER PRESSURE CHECK

After any servicing, reference should be made to:

- Tables 2 and 3, Page 3 (or the data plate), which quote details of the burner pressures for the boiler models.
- Frame 45 'Gas rate.'

Note that the pressure is set by the gas valve according to fan speed, which in turn is controlled by reference to boiler temperature and mode (CH/HW) thus the burner pressure should be checked at maximum demand for CH or HW as appropriate.

Frame 82 deals with possible causes of incorrect burner pressure.

REPLACEMENT OF COMPONENTS

55 GENERAL

WHEN REPLACING ANY COMPONENT:

1. Isolate the electricity supply at the switched spur.

   N.B. Turning the boiler 'ON / OFF' switch does not isolate the permanent live supply to the boiler.
2. Turn off the gas supply.

Note. *In order to assist fault finding, the printed circuit boards are fitted with indicator lights . Full details are found in the Fault-Finding section.*

IMPORTANT. When work is complete the sealing panel must be correctly fitted, ensuring that a good seal is made.

THE BOILER MUST NOT BE OPERATED IF THE SEALING PANEL IS NOT FITTED.

56 CH AND HW TEMPERATURE SENSOR REPLACEMENT

(Spares for both are identical)

1. Disconnect the electrical supply.
2. Remove the boiler front and sealing panels. Refer to Frame 48.
3. Remove the fan (refer to Frame 49) : the CH and HW thermistors are now exposed.
4. Close off the isolating cock(s) at the bottom of the boiler, for CH or HW, as appropriate.
5. Release system pressure by opening the appropriate drain cock(s).
   Do NOT release CH pressure using the pressure relief valve - it may cause debris within the system to foul the valve.
6. Disconnect the plug-in lead from the temperature sensor and unscrew the sensor to release it.
7. Screw in the new sensor, using thread sealant, reconnect and re-assemble in reverse order.
8. Open cock(s) and refill / repressurise pipework.
9. Test fire the boiler.
10. Disconnect the filling loop (if used).

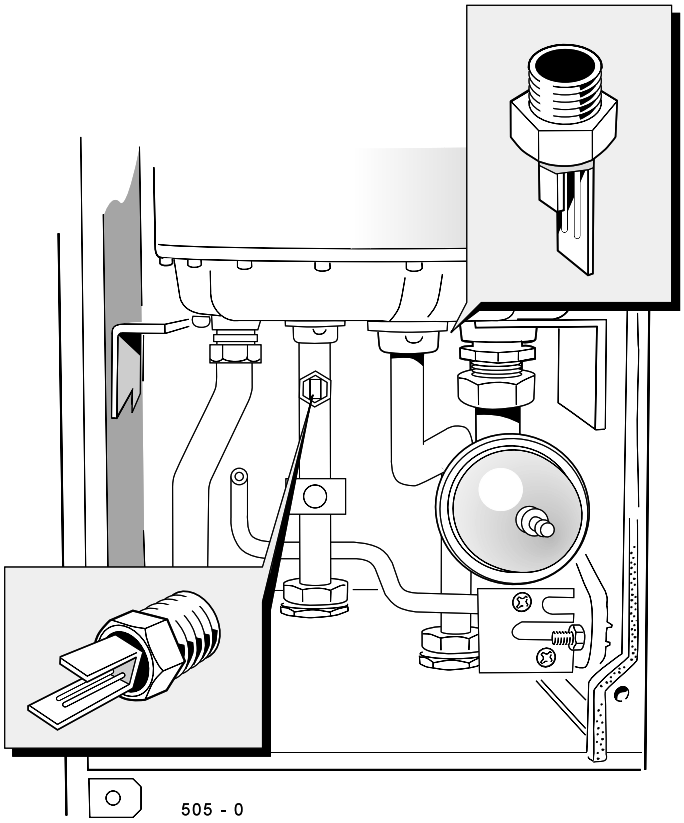

57 HW LIMIT THERMOSTAT REPLACEMENT

1. Disconnect the electrical supply.
2. Remove the boiler front panel. Refer to Frame 48.
3. Remove the fan (refer to Frame 49) : the HW limit thermostat can now be seen, attached to the HW pipework by two 3.5mm screws.
4. Disconnect the leads from the thermostat.
5. Release the 2 securing screws and remove the old thermostat.
6. Fit the new thermostat, reconnect and re-assemble in reverse order.
7. Reconnect the supply and test fire the boiler.

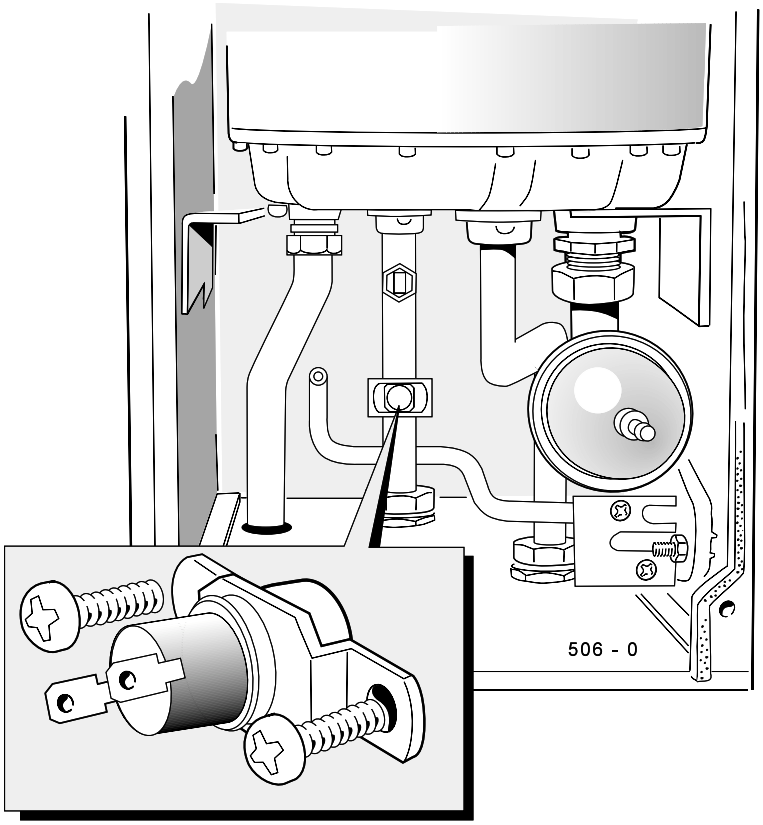

58 OVERHEAT THERMOSTAT REPLACEMENT

1. Disconnect the electrical supply to the boiler. Remove the electrical connector (secured by 1 screw) from the boiler base.
2. Remove the controls panel. Swing the panel upside down and fix with the long screws. Remove the bottom panel.
3. Release the screws securing the pressure gauge subpanel and allow the panel to move to one side.
4. Disconnect the leads from the overheat 'stat. Undo the clamping nut to release the 'stat head.
5. Undo the screw and clamp securing the pancake sensing end of the thermostat to the pipe
6. Replace with new thermostat. Re-assemble and rewire in reverse order (electrical polarity is immaterial).

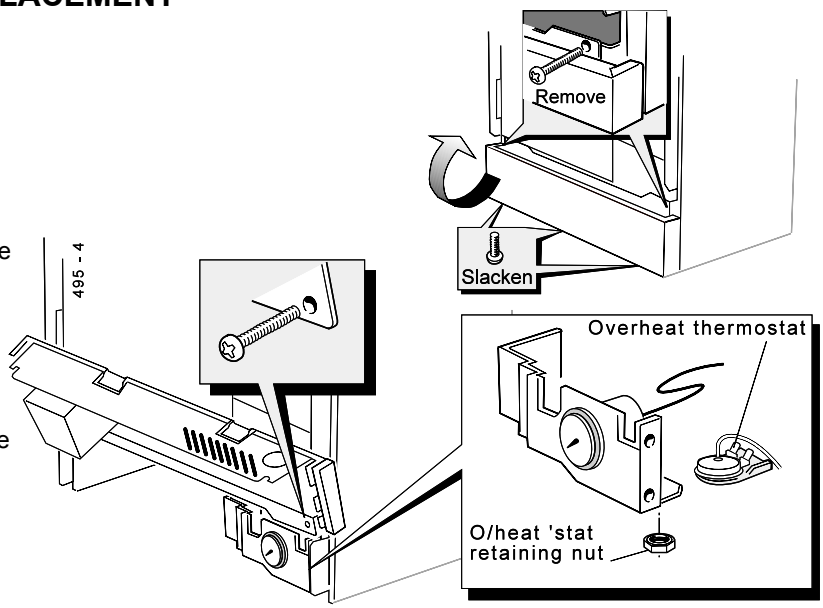

59 SPARK AND DETECTION ELECTRODE REPLACEMENT

1. Remove front and sealing panels. Refer to Frame 48.
2. Remove the fan assembly. Refer to Frame 49.
3. Remove the burner assembly. Refer to Frame 50.
4. Undo the electrode securing bracket screws, as required.
5. Fit new electrodes as necessary, ensuring that the gaskets are in good condition and sealing correctly - renew as necessary.
6. Check the spark / detection gaps. Refer to Frame 50.
7. Re-assemble in reverse order.
8. Check the ignition and operation of the burner.

Note. *The spark electrodes are replaced as a pair; the detection electrode is a single probe.*

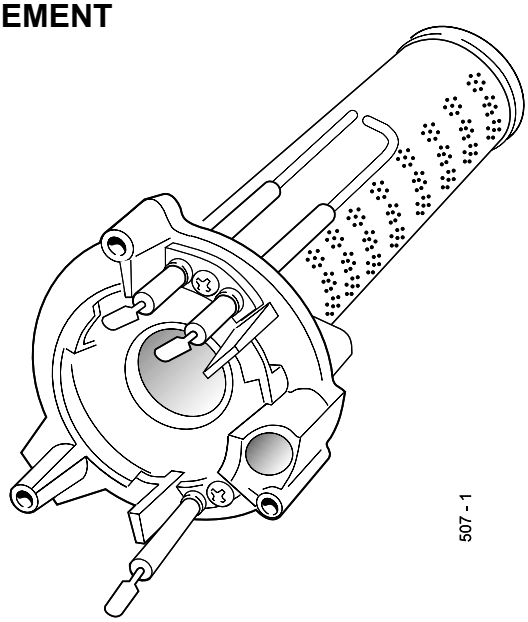

60 SPARK GENERATOR REPLACEMENT

1. Remove the front and sealing panels. Refer to Frame 48.
2. Disconnect the leads from the spark electrodes
3. Disconnect the electrical leads from the spark generator.
4. Slide out the spark generator in the direction of the arrow.
5. Fit the new spark generator and re-assemble in reverse order.
6. Check the ignition and operation of the burner.

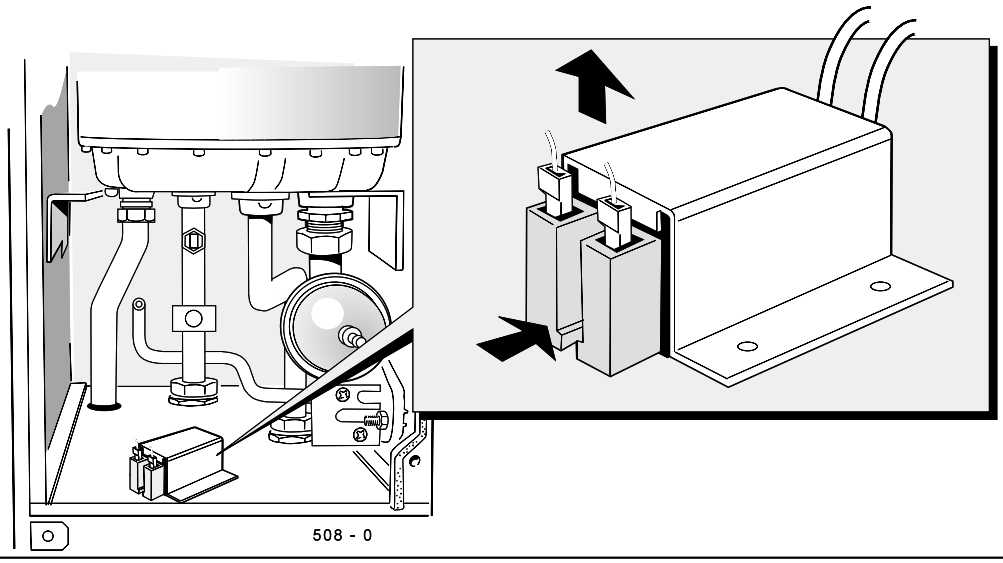

61 BURNER REPLACEMENT

1. Remove front and sealing panels. Refer to Frame 48.
2. Remove the fan assembly. Refer to Frame 49.
3. Disconnect the 2 ignition leads and one detection lead from the electrodes.
4. Disconnect the pressure sensing pipe from the burner. Pull the pipe downward to disengage it from the burner mounting plate.
5. Undo the 3 fixing screws securing the burner assembly.
6. Withdraw the burner assembly downward and out of the heat exchanger, taking care not to damage the electrodes.
7. Remove the spark and detection electrodes. Refer to Frame 59.
8. Remove the 3 securing screws and withdraw the burner from the mounting flange.
9. Fit the new burner, replacing any damaged or deteriorating gasket.

   IMPORTANT. *There are 2 graphite washers under the burner sensor casting. It is IMPERATIVE that BOTH gaskets be replaced before the burner is fitted.*
10. Re-assemble in reverse order.

Note.
Check the spark and detection gaps.

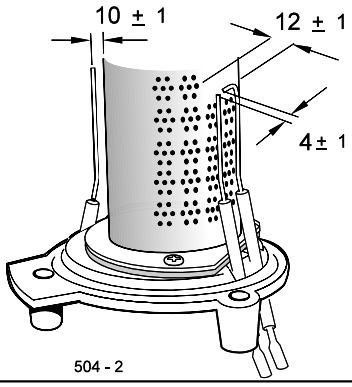

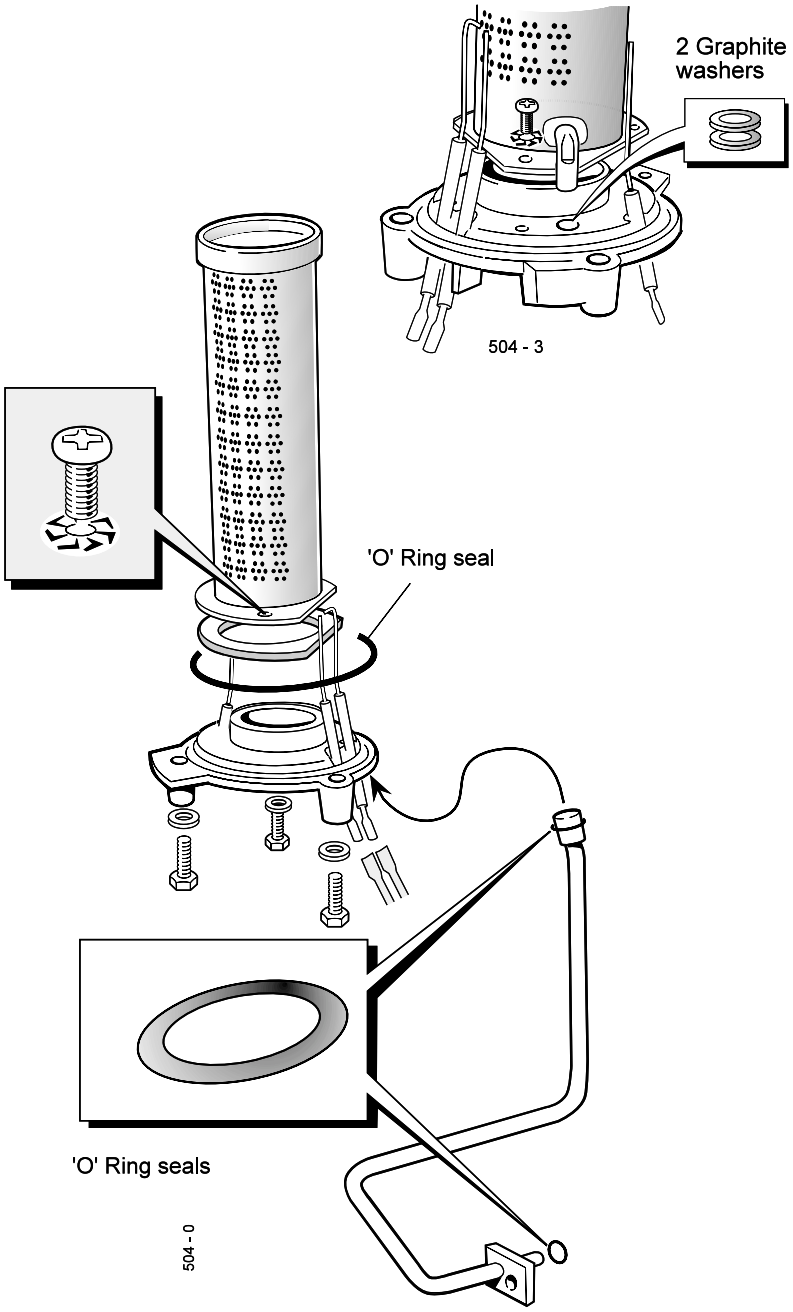

62 BURNER INJECTOR REPLACEMENT

1. Refer to Frame 48.
2. Remove the fan assembly. Refer to Frame 49.
3. Hold the injector pipe securely and unscrew the injector.
4. Check that the new injector is of the correct size and fit it, using a suitable jointing compound, sparingly.
5. Re-assemble in reverse order.

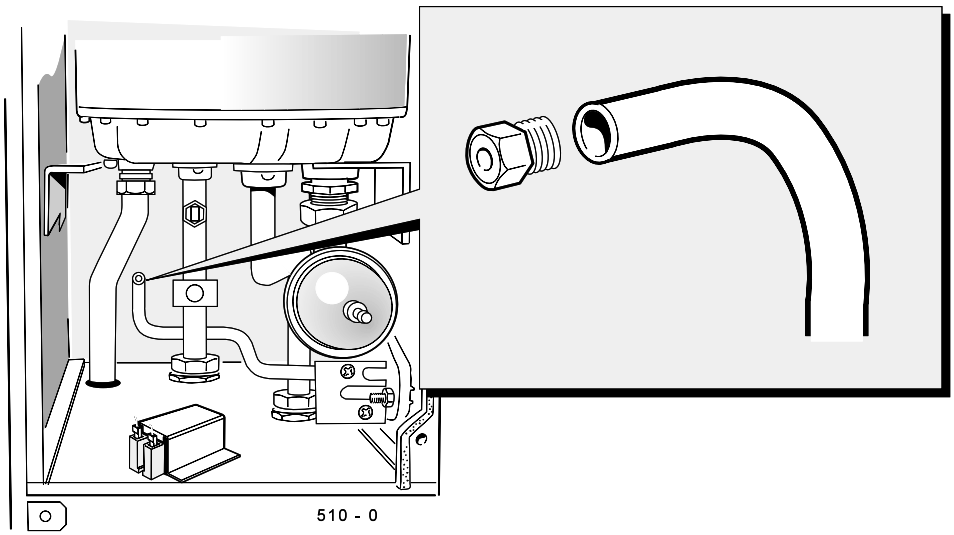

63 GAS CONTROL VALVE REPLACEMENT

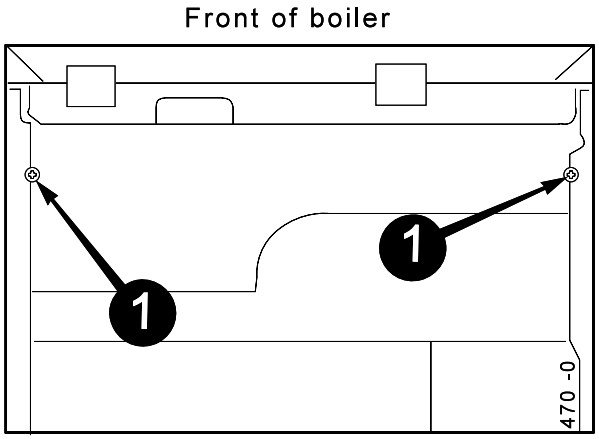

View of underside of boiler

Refer to Frame 55.

1. Remove the front and sealing panels. Refer to Frame 48.
2. Remove the casing bottom panel.
3. Remove the control panel. Disconnect the electrical leads (noting their position for refitting) and place panel safely to one side.
4. Remove the fan unit. Refer to Frame 49.
5. Disconnect the burner skin pressure sensing pipe at the burner base. Refer to Frame 50.
6. Remove the pressure gauge sub panel.
7. Undo the 2 retaining screws and unplug the electrical leads from the gas valve.
8. Undo the gas cock union connection.

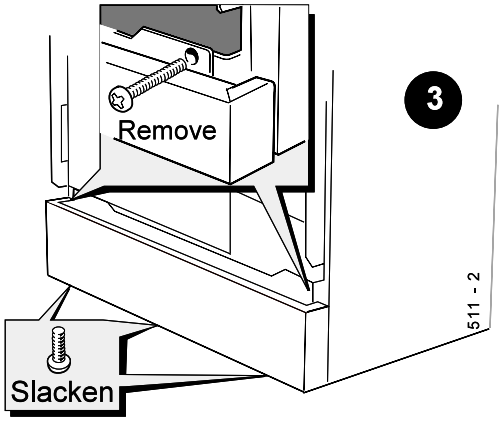

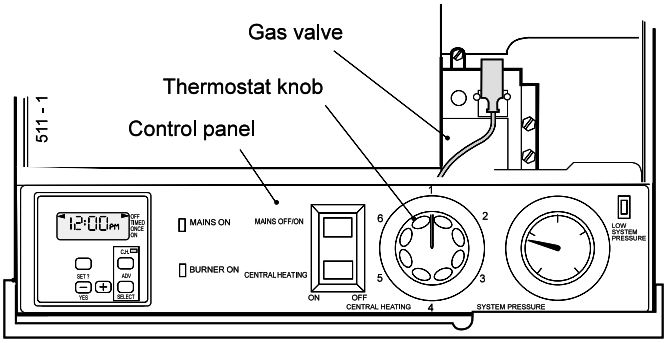

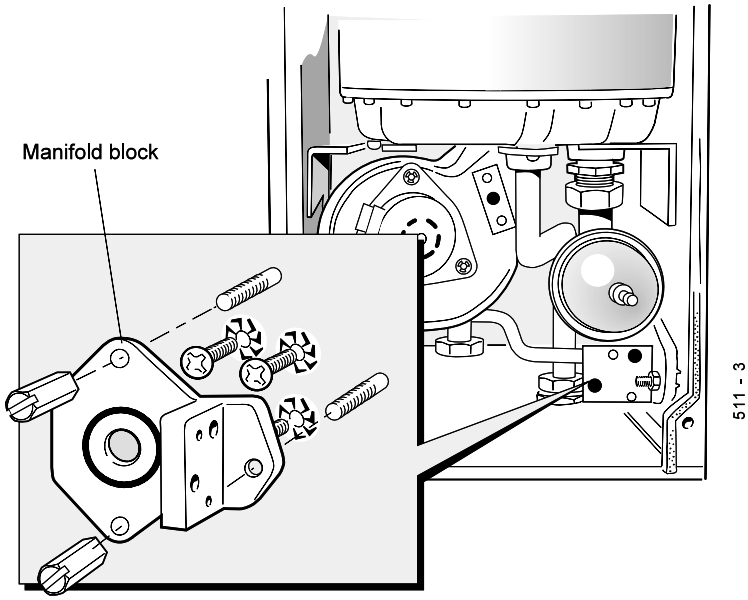

9. Undo the 2 extended nuts retaining the gas injection pipe and withdraw the pipe, taking care not to lose the 'O' ring seal. Undo the third nut and the gas outlet manifold block.
10. Supporting the valve, undo the 4 retaining screws and withdraw the gas valve, leaving the plate with the 3 studs in place.
11. Transfer the gas cock union and elbow assembly to the new gas valve, reusing the 4 M5 x 10 screws, together with the new 'O' ring seal provided.

64 GAS CONTROL VALVE REPLACEMENT - continued

12. Offer the gas valve to the plate, making sure that the stud feeds in to the corresponding hole the rear of the metal plate.
Fix the gas valve and plate in place, using the 4 M5 x 10 pozi pan screws.
Refit the manifold block and injector pipe, checking that gasket and 'O' ring are undamaged.

13. Check the operation of the new gas valve.

14. Operate the boiler for at 10 minutes at full rate and check the burner pressure against the value shown on the date plate for CH or HW as appropriate.

15. Fit the new gas valve in reverse order, ensuring that the gas injection pipe 'O' ring seal is refitted.

16. Check the operation of the new gas valve.

17. Operate the boiler on HW for at least 10 minutes at full rate and check the burner pressure against the value shown on the data plate or in Table 3.

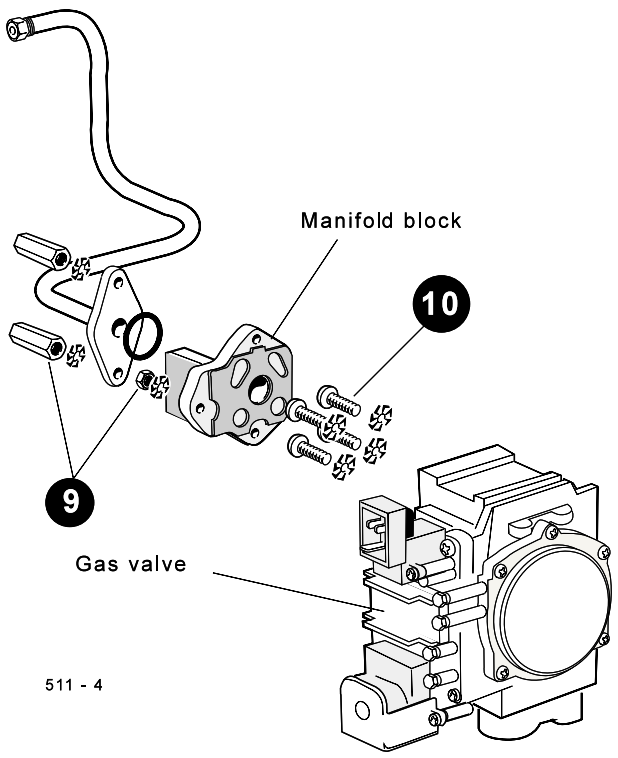

65 WATER PRESSURE GAUGE

1. Disconnect the electrical supply to the boiler.

2. Remove the bottom panel.

3. Remove the controls panel. Swing the panel upside down and fix with the long screws.

4. Close the isolating valves on CH flow/return at base of boiler then, release CH system pressure by opening one of the CH drain cocks on the isolating valves.
It is not advisable to release system pressure using the safety valve.

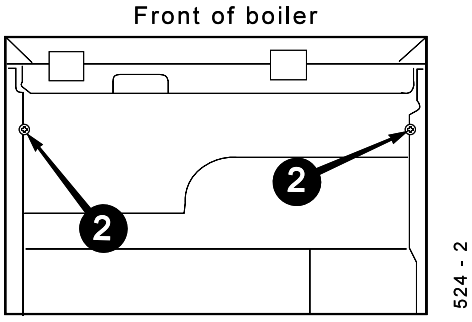

View of underside of boiler

5. Disconnect the capillary at the CH flow pipe boss.

6. Squeeze the tabs to release the pressure gauge.

7. Fit the replacement gauge and reassemble in reverse order.

8. Close all drain cocks and open both isolating valves.

9. Fit the filling loop. Fill the boiler with water and pressure to 1 bar (as appropriate). Reconnect services.

10. After satisfactory test firing and removal of air from the system, remove the filling loop.

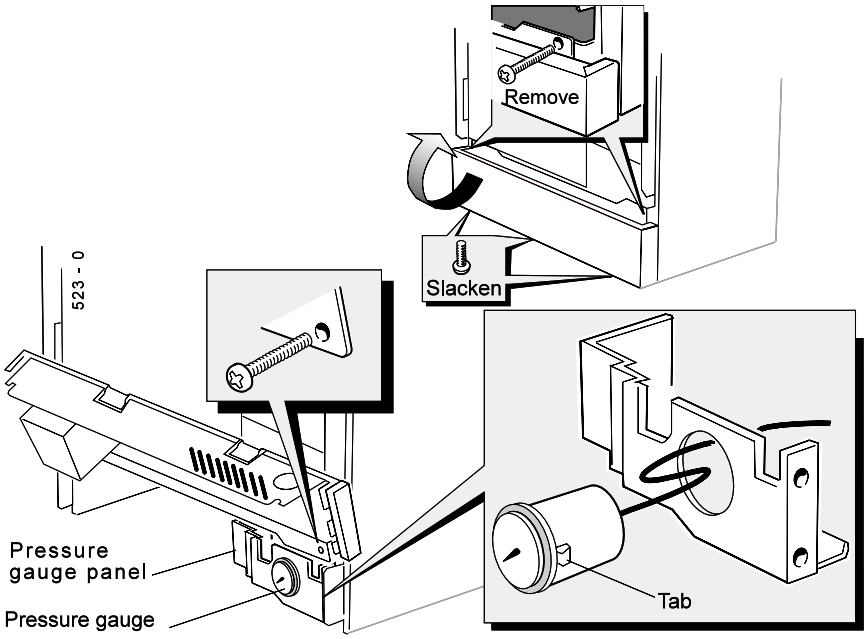

66 FAN UNIT REPLACEMENT

1. Remove the front and sealing panels. Refer to Frame 48.
2. Disconnect the electrical leads from the fan.
3. Disconnect the pressure sensing pipe from the fan.
   - **a.** Undo the 2 screws securing the pipe to the fan.
   - **b.** Undo the 2 screws securing the pipe clamping plate to the manifold block.
   - **c.** Withdraw the clamping plate.
   - **d.** Withdraw the pipe from the boiler.
4. Rotate the LH side of the fan body towards you to disengage the bayonet fixing on the fan outlet.
5. Withdraw the fan.

   Note. *Always take care when handling the fan in order to preserve the balance of the impeller.*
6. Fit the new fan ensuring that:
   - **a.** All seals are correctly refitted.
   - **b.** The sensing pipe clamping plate is correctly refitted.
   - **c.** The fan is fully engaged between the two retaining dimples on the LHside panel clip.
7. Check the operation of the new fan.

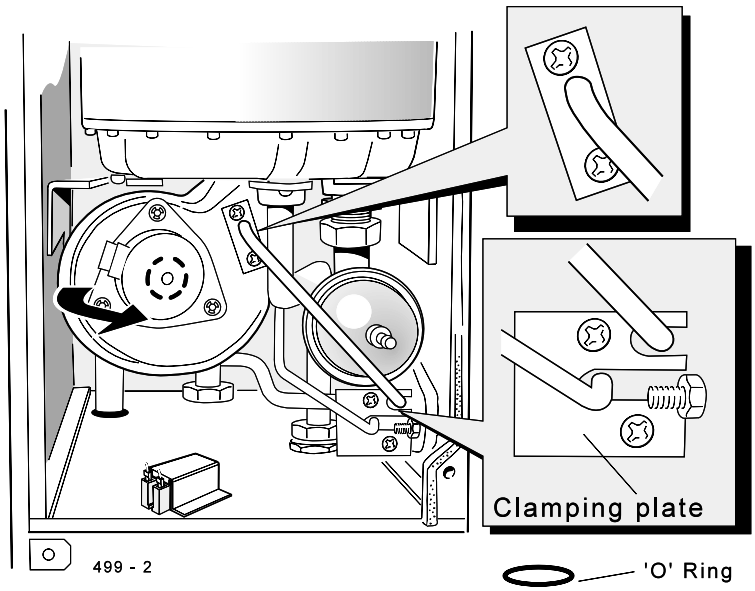

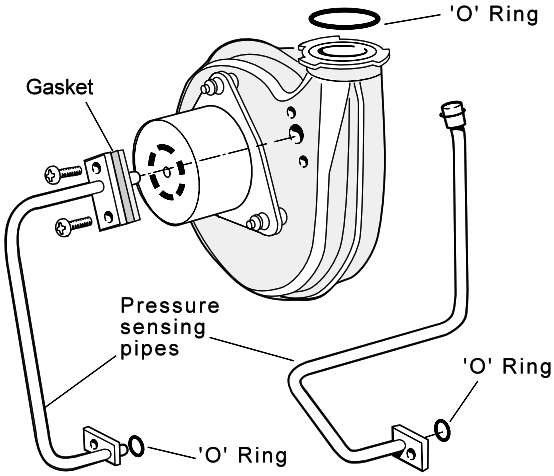

67 AIR PRESSURE SWITCH REPLACEMENT

1. Disconnect the electrical supply to the boiler.
2. Remove the front panel . Refer to Frame 48.
3. Disconnect the wires from terminals 1 and 3.
4. Remove the securing screws.
5. Disconnect the sensing tube and remove the switch.
6. Fit the new switch and re-assemble in reverse order.
7. Make sure that the 2 brown wires are fitted to terminals 1 and 3 (either to either).

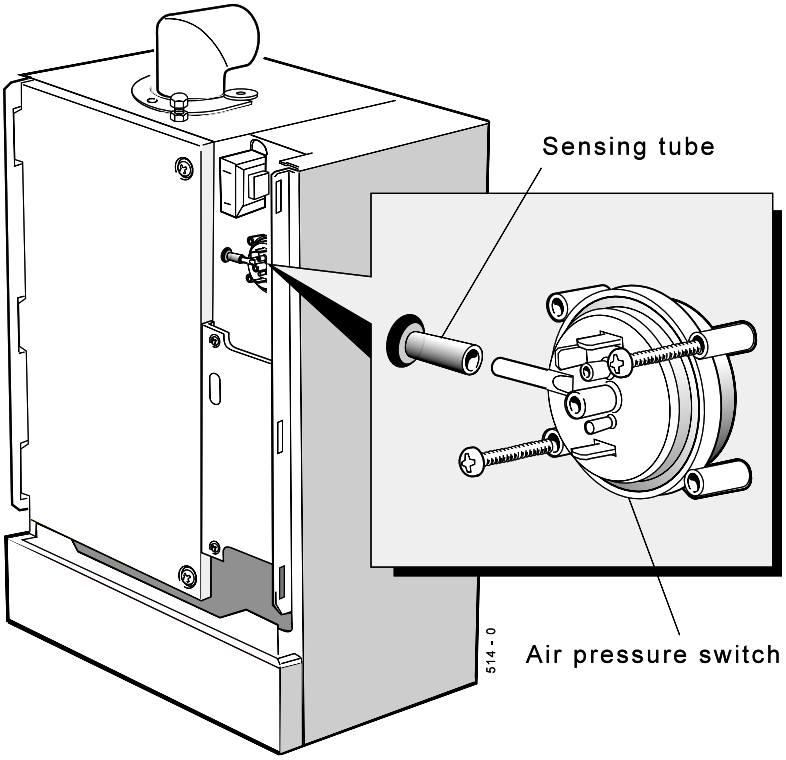

68 PRINTED CIRCUIT BOARD REPLACEMENT

The FF 80 uses PCBs 37 and 38 (Board 38 controls the fan speed)

Refer to Frame 48.

1. Isolate the electrical supply. Refer to Frame 55.
2. Remove the boiler front panel and the RH cover which protects the PCBs.
3. Disconnect all 'Molex' plugs feeding the PCB to be changed.
4. Release the clips and remove the PCB.
5. Check for dampness on the old PCB (many PCBs are changed when they are not faulty but have come into contact with moisture).
6. Fit the new board onto the clips.
7. Replace all PCB connectors. Note that the connectors are made non-interchangeable due to the number of pins, position of the blanking plug and wire lengths. If in doubt, refer to Pictorial Wiring diagram (Frame 40).
8. Replace the panels, power up and test both HW and CH modes of operation.

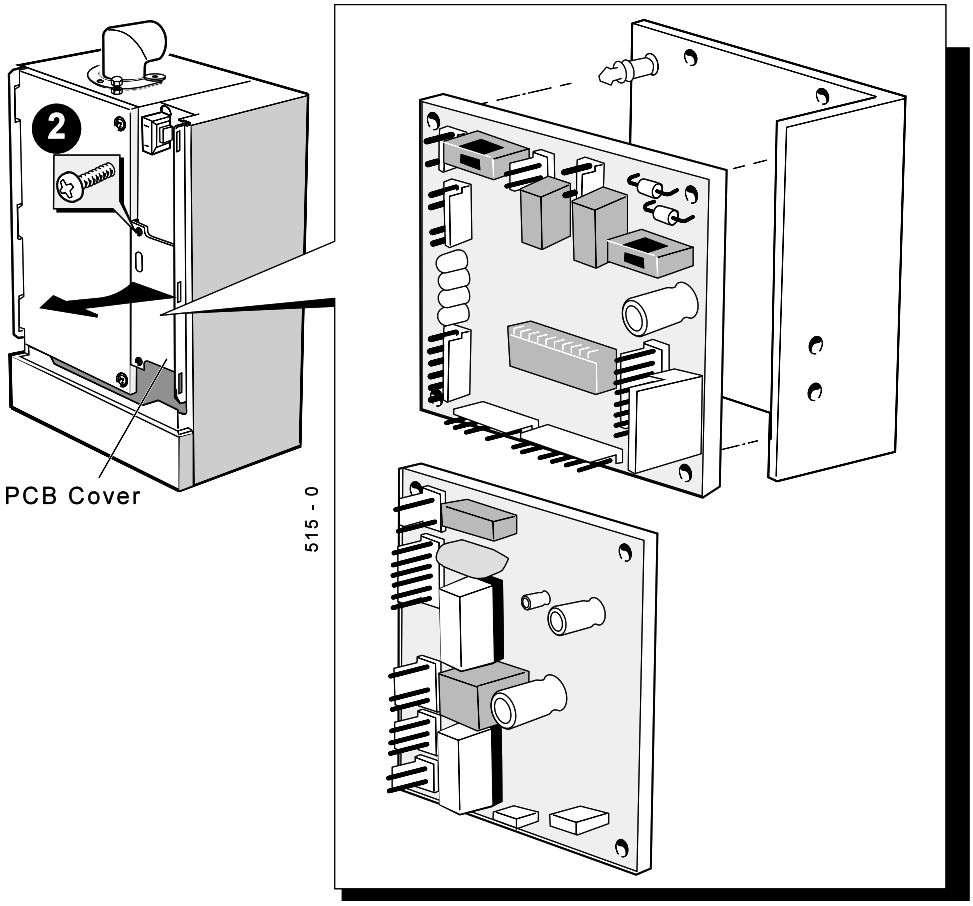

69 HW EXPANSION VESSEL

1. Disconnect the electrical supply to the boiler.
2. Remove the front and sealing panels. Refer to Frame 48.
3. Close the isolating valve on the HW supply then release pressure by opening a hot tap.
4. Drain using the drain nipple on the isolating valve. Refer to Frame 52.
5. Unscrew the HW expansion vessel, which may be finger-tight. If necessary, remove the fan (see Frame 66) to access to use a spanner on the hexagon nut behind the vessel.
6. Replace with new sealing gasket and vessel. Reassemble in reverse order and test fire.

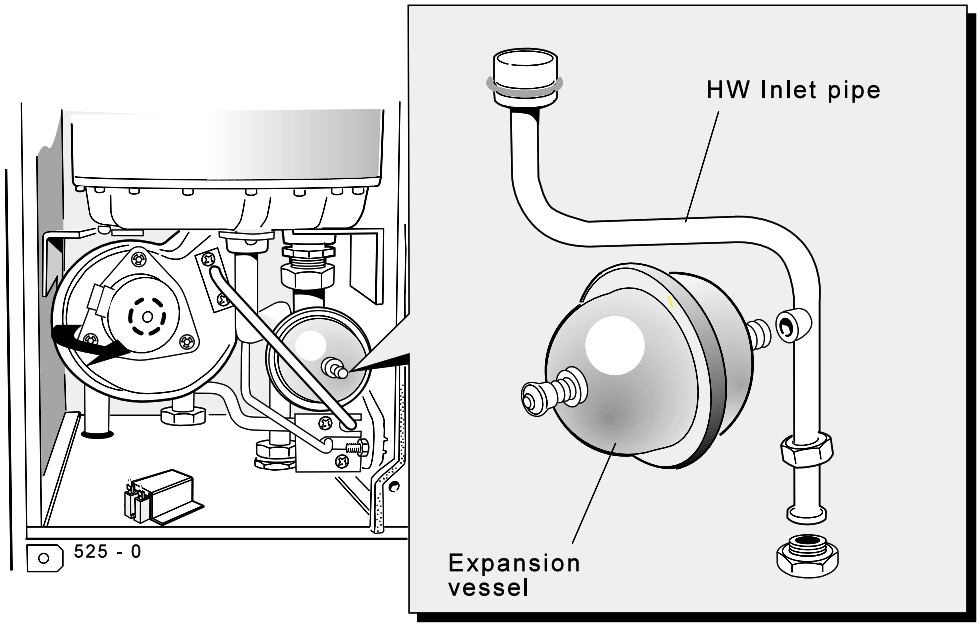

70 PUMP REPLACEMENT

Note. *The Grundfos 15/60 pump is available in several versions, according to the position of the electrical connector in relation to the pipework. Check that you have the correct version - see step 9.*

1. Isolate the electrical supply. Refer to Frame 55.
2. Remove the boiler bottom panel.
3. Remove the controls panel. Swing the panel upside down and fix with the long screws.
   If programmer is fitted, its necessary to disconnect the programmer harness at the terminal block.

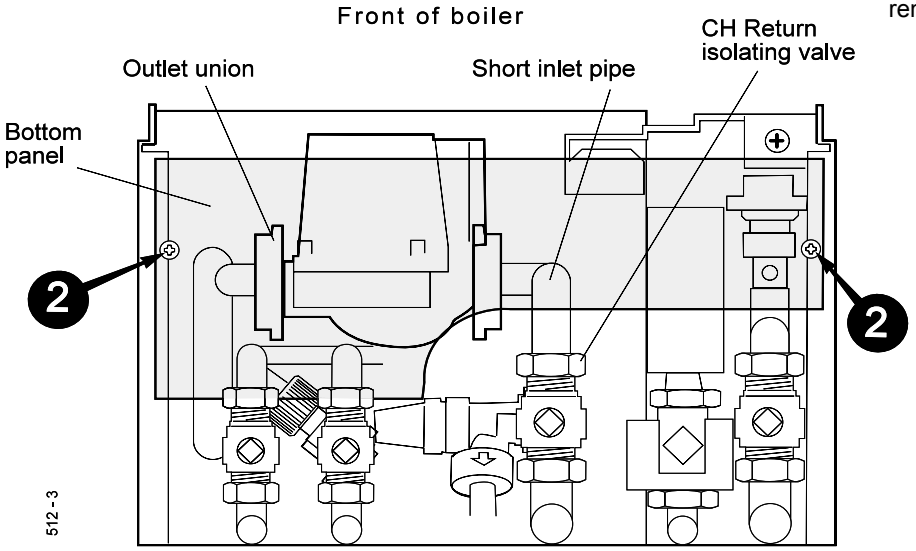

View of underside of boiler

4. Close the cocks on the CH flow and return pipework below the boiler.
5. Drain down (refer Frame 52) by opening CH. drain cocks. Do not release system pressure using the pressure relief valve, it may cause debris within the system to foul the valve.
6. Loosen the pump outlet union and the inlet connection at the rear of the CH return isolating valve.

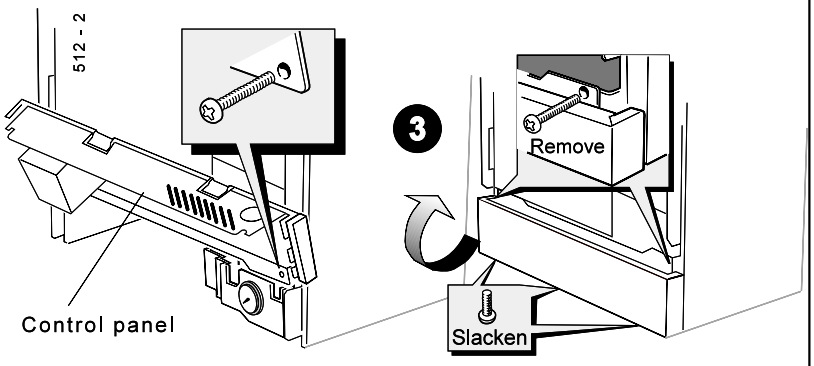

7. Remove the electrical cover and disconnect the mains wires from the connections.
8. Disconnect the pipework fully and remove the old pump, together with the short inlet pipe.
9. Ensure that the replacement pump has the motor positioned *so that the electrical connections are on the same side as the inlet pipe.* If necessary, use an Allen key to remove the motor and reposition it.

10. Transfer the short inlet pipe to the *inlet* side of the replacement pump, using a new sealing washer.
11. Make the electrical connections.
12. Offer the pump / pipe assembly to the boiler, using the second new washer on the pump outlet union. Tighten the water connections.

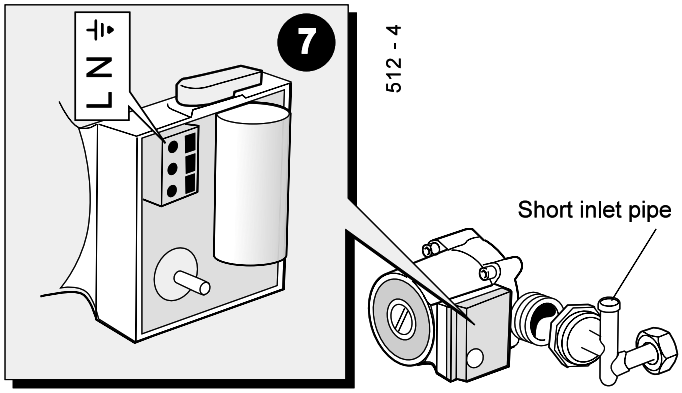

13. Close the drain cocks and open the system isolating cocks, fit the filling loop, fill, vent and pressurise to 1bar (or as required).
14. Restore services and operate the heating controls to test-fire the boiler.
15. Vent air and top up the pressure again, if required.
16. Remove the filling loop.

71 HEAT EXCHANGER REPLACEMENT

WARNING. This will necessitate disconnection of all services, including the flue turret.

Refer also to Frame 7 - 'Boiler Exploded View'.

1. Isolate the electrical supply to the boiler.

2. Isolate the water and gas supplies by closing all 4 cocks below the boiler.

3. Remove the boiler front panel and inner sealing panel - refer to Frame 48.

4. Remove the bottom panel.

5. Attach drain pipes to the 4 boiler drain points, one on each isolating valve. Open the CH drains by turning the grey knobs and the HW drains by slackening the drain nipple. Note the marking on the bottom of the valves. Refer to Frame 52

View of underside of boiler

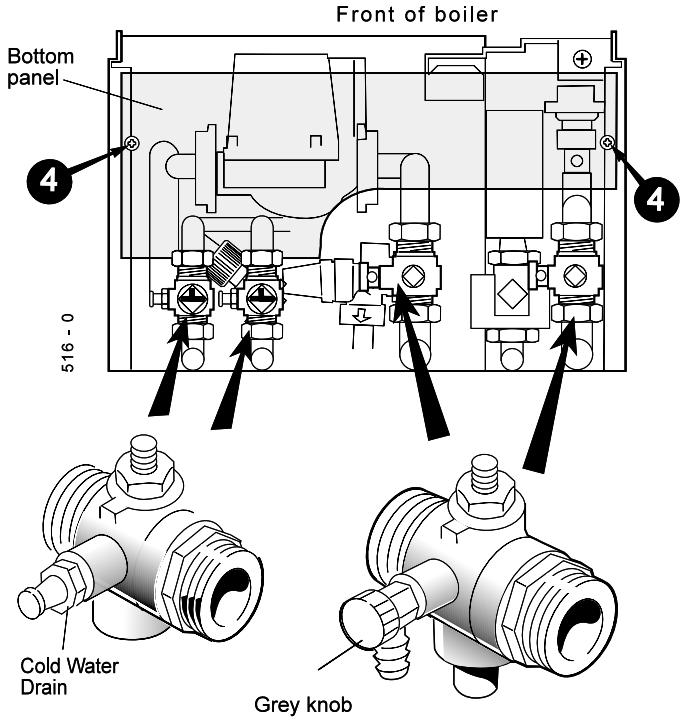

6. While the boiler is draining, release the turret clamp on top of the boiler, together with the screw securing the turret to the flue pipe. Remove the turret.

7. Disconnect the fan pressure sensing pipe by removing the 2 screws at the fan end and the screws of the securing plate at the gas valve end. Remove the pipe- refer to Frame 66.

8. Unplug the wiring harness from the fan. Release the clip securing the fan and rotate the fan towards you until it is free of its bayonet mounting socket (the fan may alternatively be removed complete with harness) - refer to Frame 66.

9. The second pressure sensing pipe, which is connected via an 'O' ring seal to the burner base may now be carefully withdrawn downwards.

10. Disconnect the spark electrode leads and the flame sensing electrode lead at the burner base - refer to Frame 59.

11. Remove the 3 screws securing the burner assembly and withdraw the assembly downwards, taking care not to damage the electrodes - refer to Frame 61.

12. Unplug the electrical leads from both CH and HW temperature sensors and disconnect the leads from the HW overheat thermostat. Unscrew the CH temperature sensor and remove it, to avoid damage to it - refer to Frames 56 and 57.

13. Loosen the top and bottom connections on the 22mm CH pipes to the heat exchanger.

14. Loosen the bulkhead connectors at the lower end of the 15mm HW pipes, together with the hexagon socket screws retaining the upper ends of these pipes. The inlet pipe can now be swung round and withdrawn, complete with HW expansion vessel.
The straight outlet pipe cannot be removed until later - see paragraph below.

15. Unscrew the automatic air vent on the top of the heat exchanger. This should be done inside the jacket in order not to unscrew merely the top off the air vent.

16. Next remove the 2 screws securing the heat exchanger from below, together with the top clamp screw.

17. The heat exchanger is now free and should be supported whilst removing the HW outlet pipe.

18. Remove heat exchanger from the boiler.

19. Re-assemble in reverse order, using new gaskets as appropriate.

20. Before refitting the fan, check that the wires have been reconnected to the CH sensor (mauve pair), HW sensor (grey), overheat 'stat (black) and flame detection electrode (yellow).

21. When re-assembly is complete, fit the filling loop, close all drain points, open all isolating valves and ensure that the boiler is filled, vented of air and pressurised before attempting to fire it.

22. After a satisfactory test firing, remove the filling loop (this is a requirement of the water bylaws).

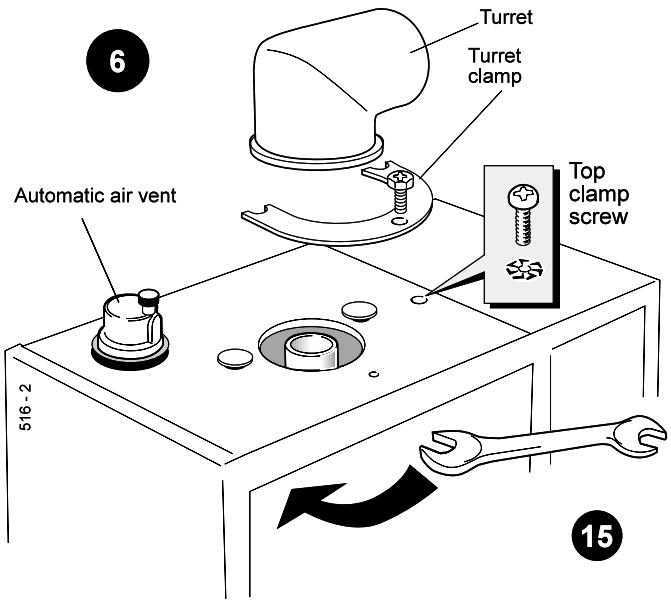

72 BOILER SEALING PANEL SEAL

1. Refer to Frame 48.
2. Remove the screws and disengage panel.
3. Remove the old seals and thoroughly clean the casing surfaces.
4. Fit the new self adhesive seals, 3 to the panel and 1 the casing .
5. Re-assemble in reverse order.

Note.
Ensure that the boiler sealing panel is correctly seated, compressing the sealing strip to make an airtight joint.

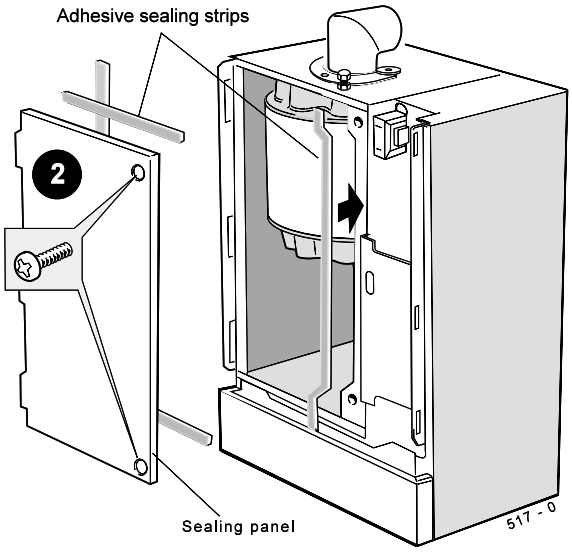

73 WATER PRESSURE SWITCH

1. Disconnect the electricity supply - refer to Frame 55.
2. Close the CH flow and return isolating valves at the bottom of the boiler. Use the drain points on these valves to release system pressure and drain down. (It is not advisable to release system pressure using the safety valve manual knob as this can cause debris to lodge in the valve).
3. Remove the controls panel. Swing the panel upside down and fix with the long screws. If programmer is fitted, it is necessary to disconnect the programmer harness at the terminal block.
4. Remove the pressure gauge sub panel.
5. Remove the wires from the switch.
6. Unscrew the pressure switch and replace with the new one. Use new sealing washer.
7. Reassemble in reverse order.
8. Ensure low pressure neon extinguishes on achieving system pressure.

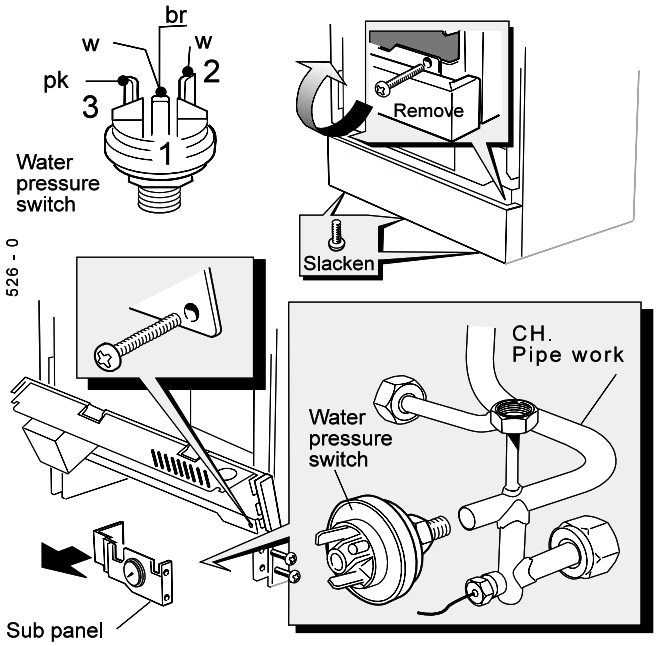

74 PROGRAMMER REPLACEMENT (if fitted)

1. Refer to Frame 55.

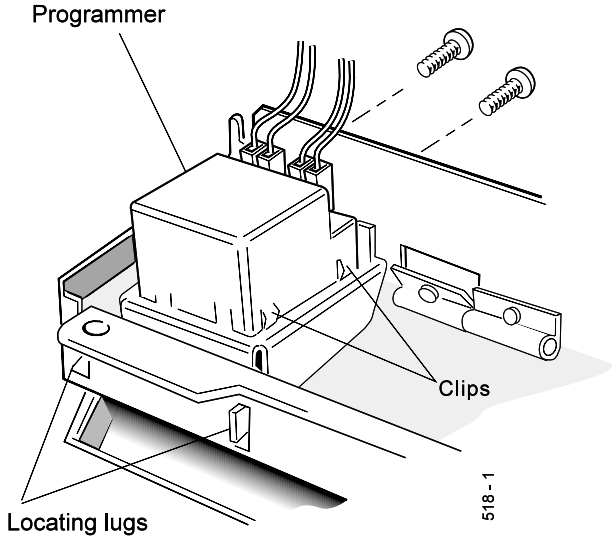

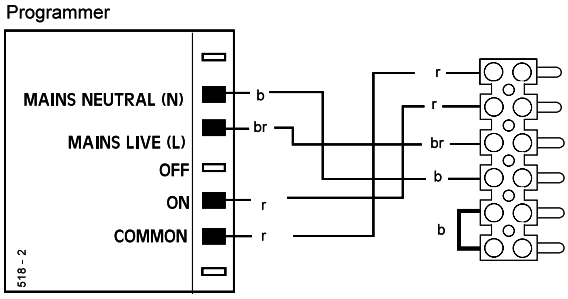

2. Remove the casing front panel. Refer to Frame 48.
3. Disconnect the programmer terminal block.
4. Remove the control panel. Refer to Frame 65.
5. Undo the 2 retaining screws and withdraw the programmer, complete with mounting bracket, from the control panel.
6. Compress the clips on the sides of the programmer and withdraw it from the retaining bracket.
7. Fit the new programmer and re-assemble in reverse order.
8. Check the operation of the new programmer.

75 WATER FLOW SWITCH REPLACEMENT

1. Isolate the electrical supply. Refer to Frame 55.
2. Remove the boiler bottom panel .
3. Remove the controls panel. Swing the panel upside down and fix with the long screws. If programmer is fitted, it is necessary to disconnect the programmer harness at the terminal block.
4. Close the cock on the HW inlet pipe below the boiler.
5. Drain down. Refer to Frame 52.
6. Disconnect the flow switch electrical lead at the in line connector.
7. Undo the knurled fixing nut and withdraw the flow switch.
8. Fit the new flow switch, ensuring that the locating pin and hole are correctly positioned.
9. Complete the reassembly in reverse order.
10. Open the isolating valve and bleed air out at the tap(s).
11. Reconnect the electrical supply and open a HW tap to test operation of the boiler.

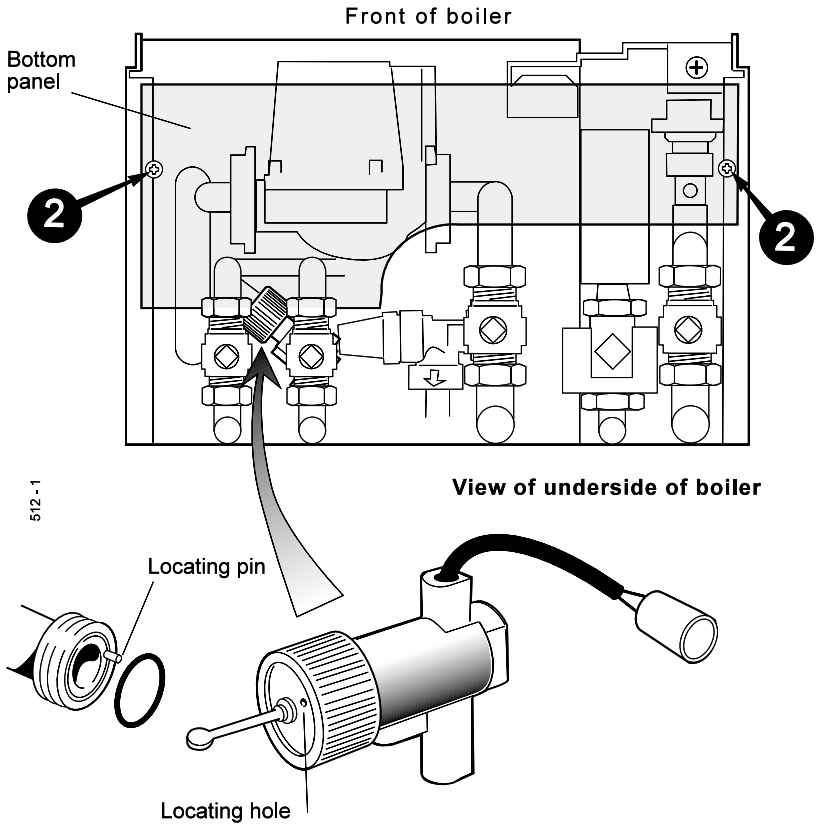

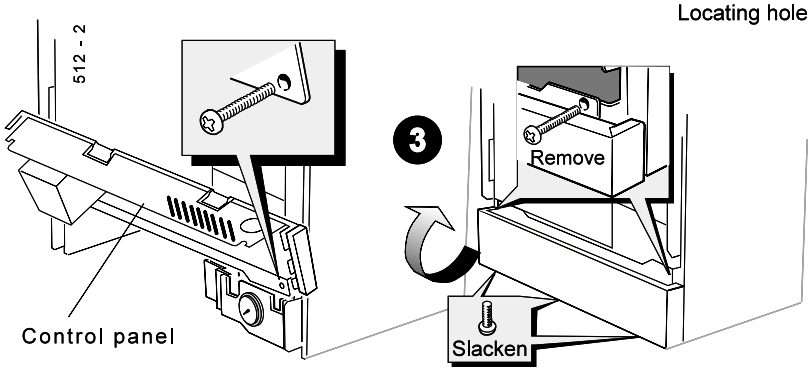

76 MAINS TRANSFORMER REPLACEMENT

1. Isolate the electrical supply to the boiler. Refer to Frame 55.
2. Remove the boiler front panel. Refer to Frame 48.
3. Release the screws securing the PCB cover and remove the cover.

   Locate the leads from the transformer to PCB 38 and disconnect the white 'Molex' connector from the PCB.
4. Release the transformer mounting screws.
5. Fit the replacement transformer and complete the reassembly in reverse order.

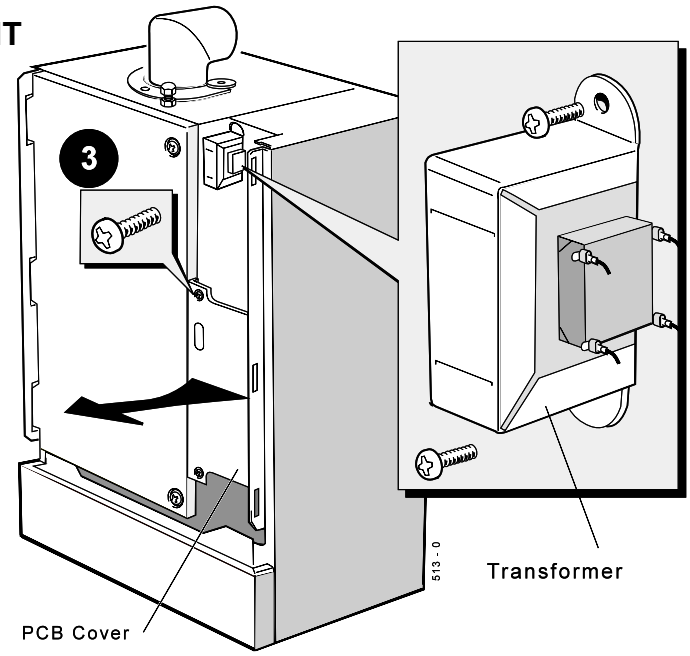

77 PRESSURE RELIEF VALVE (Safety valve) REPLACEMENT

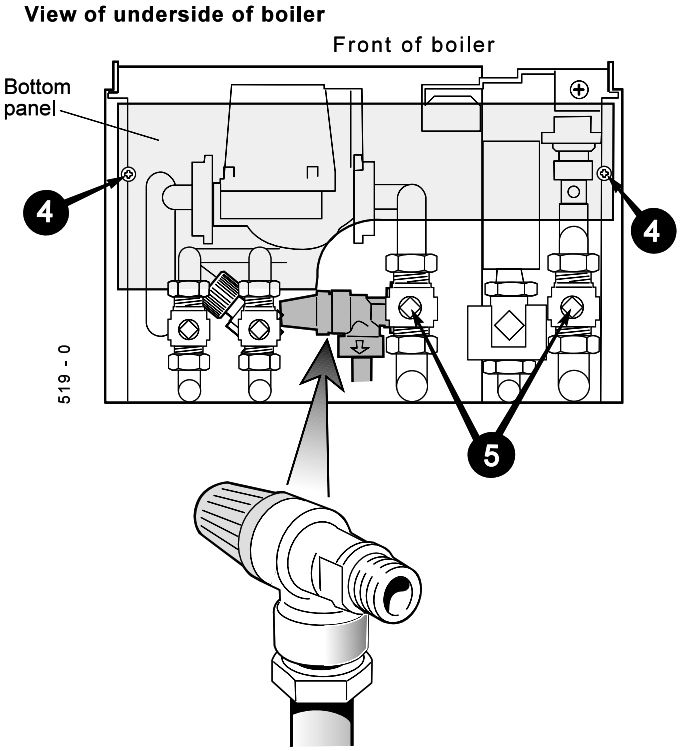

1. Isolate the electrical supply. Refer to Frame 55.
2. Remove pump. Refer to Frame 70.
3. Disconnect the mains electrical connection from the bottom panel. Disengage the 2 halves of the connector.
4. Remove the boiler bottom panel.
5. Close the cocks on the CH flow and return pipework below the boiler. Drain down - refer to Frame 52.
6. Disconnect the discharge pipe to the pressure relief valve.
7. Undo the connection securing the valve to the boiler.
8. Replace with a new valve and restore the pipework, in reverse order, using new sealing washer.
9. Open cocks, fit filling loop, fill, vent and pressurise to 1 bar (or as required).
10. Restore the electrical supply and set the heating controls, to test-fire the boiler.
11. Vent air and top up the pressure again, as required.
12. Remove the filling loop.

78 CH EXPANSION VESSEL REPLACEMENT

If the CH expansion vessel is faulty, there are 3 options:

A. If it has a punctured diaphragm, but is *otherwise leak free,* then it can be left in place and a new vessel added to the system, external to the boiler, provided it is of adequate capacity and pre-charge pressure.

B. If there is at least 600mm clearance above the boiler, the expansion vessel can be changed without removing the boiler (RH exit flues will have to be disturbed). Access to the water connection of the expansion vessel is *either* by removal of the right hand side boiler panel (if there is 200mm RHS clearance) *or* by removal of the fan and gas valve.

C. If there is insufficient headroom, the boiler will need to be removed. In this case, access to the water connection of the expansion vessel will be possible by removing the RH boiler side panel.

For option B, proceed as follows:

B1. Isolate the electric, gas, and water services.

B2. Drain down the boiler CH circuits, using the appropriate drain cocks.

B3. **Where RH clearance is available.** Unscrew the 6 screws securing the RHS panel and remove panel to gain access to expansion vessel connector.

Where RH clearance is not available. Remove the fan (refer Frame 49) and gas valve (refer Frame 63) to gain access to the expansion vessel connector.

B4. Disconnect the flue, if RH exit, and remove to the right (general details are reverse of Frames 18 & 28).

B5. Undo the 3 screws securing the boiler panel above the expansion vessel, and remove the panel.

B6. Undo the water connection at the bottom of the expansion vessel. Lift out the vessel and fit the replacement, reassembling in reverse order - using new gaskets and 'O' rings where appropriate.

B7. Fill, pressurise and test.

B8. Remove the filling loop.

For option C, proceed as follows:

C1. Isolate the electrical, gas and water services.

C2. Drain down the boiler CH/HW circuits using the appropriate boiler drain cocks (refer Frame 52).

C3. Undo all service unions at the base of the boiler, and unplug and disconnect the electrical supply lead, which is secured by one screw in the centre of the boiler base.

C4. Disconnect the flue turret and place to one side (reverse of the assembly described in Frames 18 & 28).

C5. Lift the boiler off the wall and place horizontally, at a convenient working height.

C6. Follow instructions B3 to B6.

C7. Return the boiler to the wall mounting frame, remaking all connections, including the flue.

C8. Fill, pressurise and test.

C9. Remove the filling loop.

79 FAULT FINDING MAIN MENU

START THE BOILER FROM COLD

PCB = Printed Circuit Board

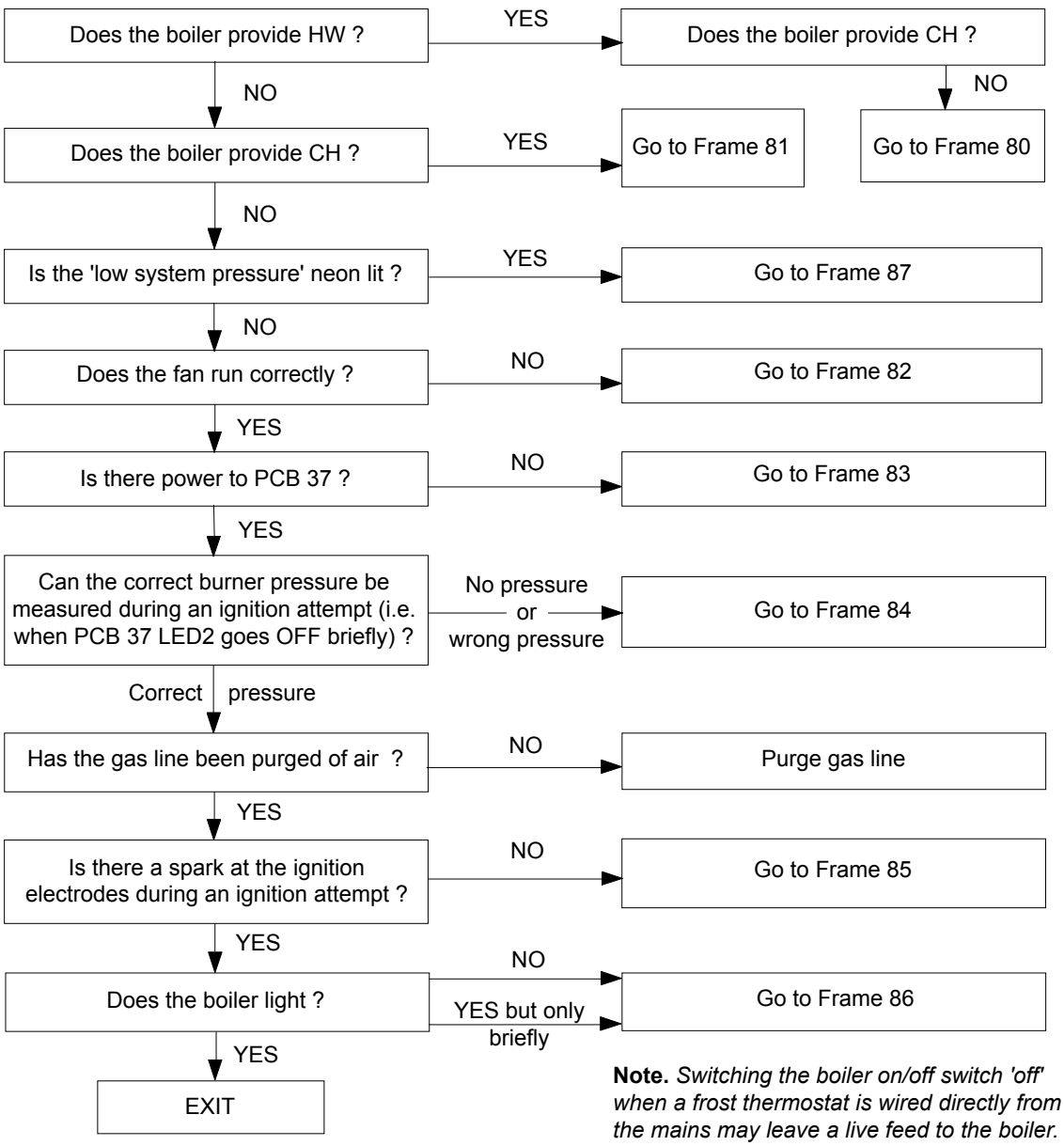

Note. *Switching the boiler on/off switch 'off' when a frost thermostat is wired directly from the mains may leave a live feed to the boiler.*

The correct sequence of operation during ignition is as follows:-

1. *Mains to boiler with water pressure switch and overheat thermostat closed.*

2. a. *Hot water tap turned on (HW and Fan lights come on) - the flow switch signals this to PCB 38, which starts the fan at full speed and sends power to Ignition Control PCB 37 via the casing pressure switch.*

or b. *Clock, heating switch and room thermostat call for heat (CH and Fan lights come on) - PCB 38 senses this, starts the fan at full speed and sends power to the pump and Ignition Control PCB 37, via the casing pressure switch.*

or c. *Both the above call for heat (HW and Fan lights come on) - HW takes priority, i.e. pump OFF, fan running at full speed, power to PCB 37.*

3. *If the casing pressure switch is closed and the fuse on PCB 37 is OK, the 'power' and 'lockout' LEDs PCB 37 illuminate.*

4. *After 8 seconds pre-purge time 'lockout' LED 2 goes OFF, the spark starts and the gas valve opens.*

5. *If a flame is detected the spark stops, 'lockout' LED stays OFF and the 'Burner on' neon lights - the fan speed and gas rate then adjust as dictated by boiler water temperature.*

6. *If a flame is not detected the spark stops, the gas valve closes, the fan continues to run and 'lockout' LED comes ON.*

Foot Note: Presence of Live supply on a terminal may be checked with a multimeter set to the appropriate AC range (apply the other probe of the meter to mains neutral, e.g. on terminal N of the programmer terminal strip).

80 HW but no CH

Note 1. *At the end of a call for heat by the room thermostat / time control, a 2 minute pump overrun period occurs. During this time the boiler will not restart for CH* ***even if the controls are calling for heat****. This is done to prevent uneconomical 'short cycling.' This period can be curtailed by running a hot tap for a few seconds.*

Note 2. *When panels are removed for service, live parts are exposed so caution should be exercised when fault-finding.*

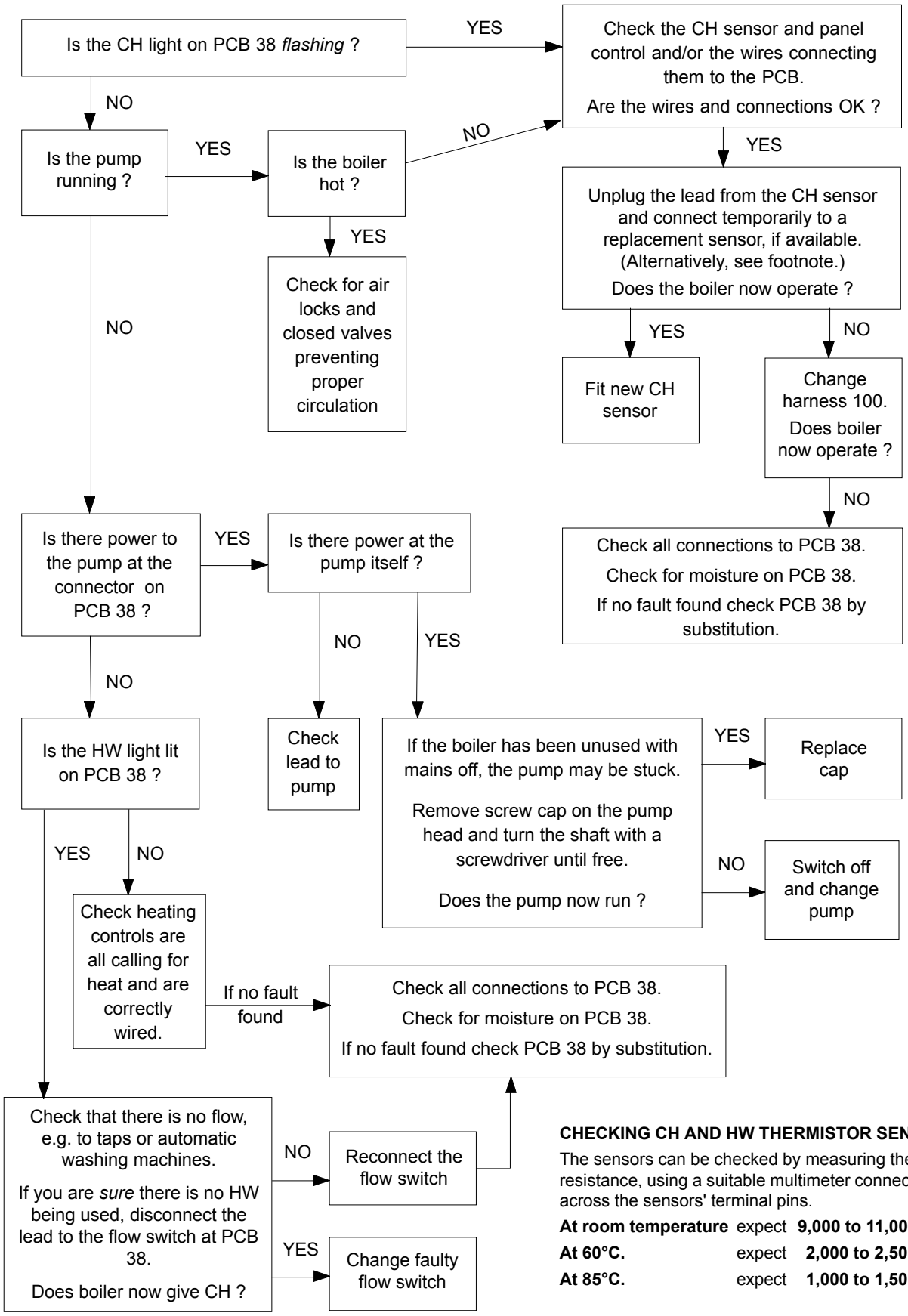

CHECKING CH AND HW THERMISTOR SENSORS

The sensors can be checked by measuring their resistance, using a suitable multimeter connected across the sensors' terminal pins.

At room temperature	expect	**9,000 to 11,000** Ohms
At 60°C.	expect	**2,000 to 2,500** Ohms
At 85°C.	expect	**1,000 to 1,500** Ohms

81 CH but no HW

Note.

When panels are removed for service, live parts are exposed so caution should be exercised when fault-finding.

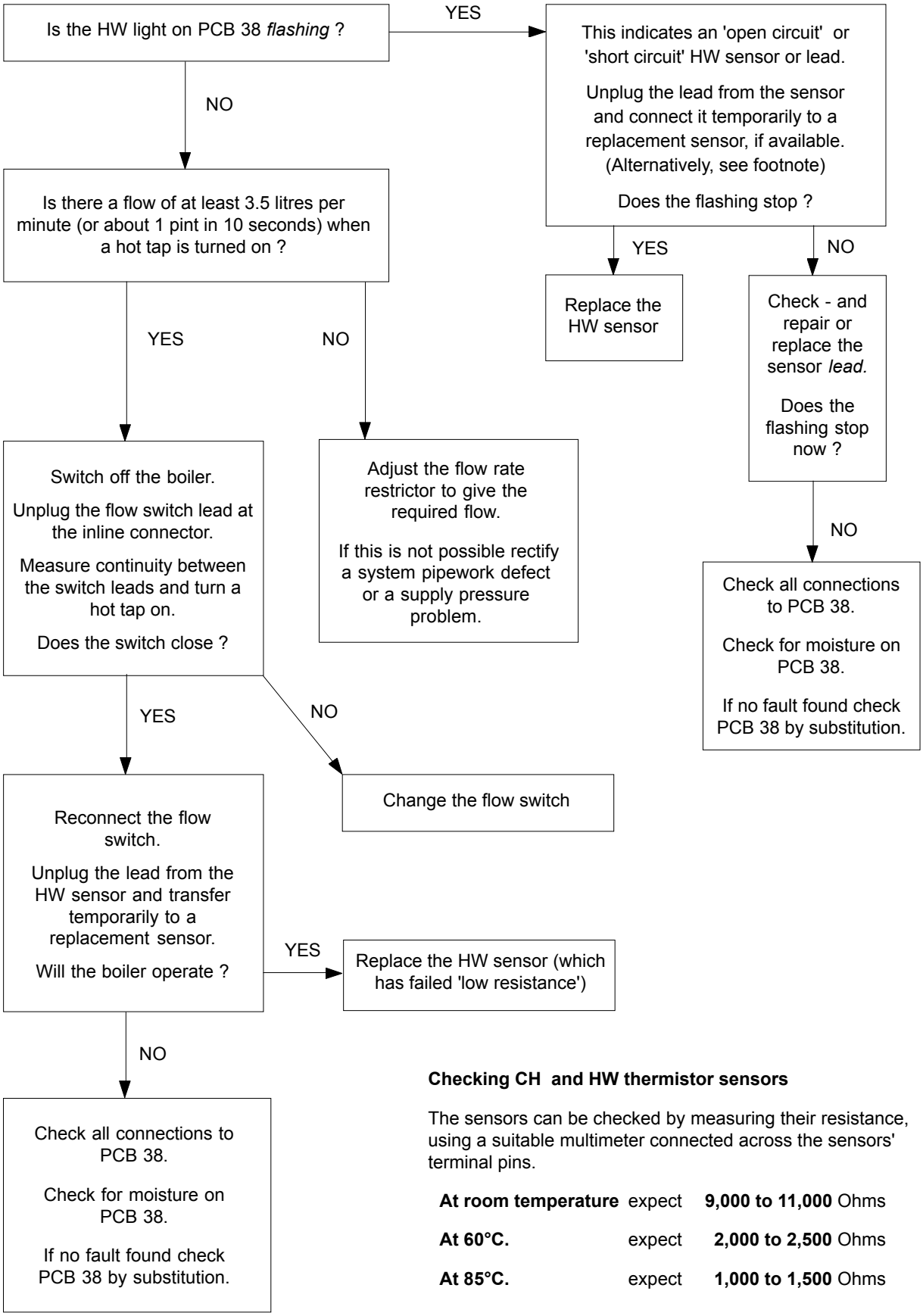

Checking CH and HW thermistor sensors

The sensors can be checked by measuring their resistance, using a suitable multimeter connected across the sensors' terminal pins.

At room temperature	expect	**9,000 to 11,000** Ohms
At 60°C.	expect	**2,000 to 2,500** Ohms
At 85°C.	expect	**1,000 to 1,500** Ohms

82 Fan not running correctly

Note. *When panels are removed for service, live parts are exposed so caution should be exercised when fault-finding.*

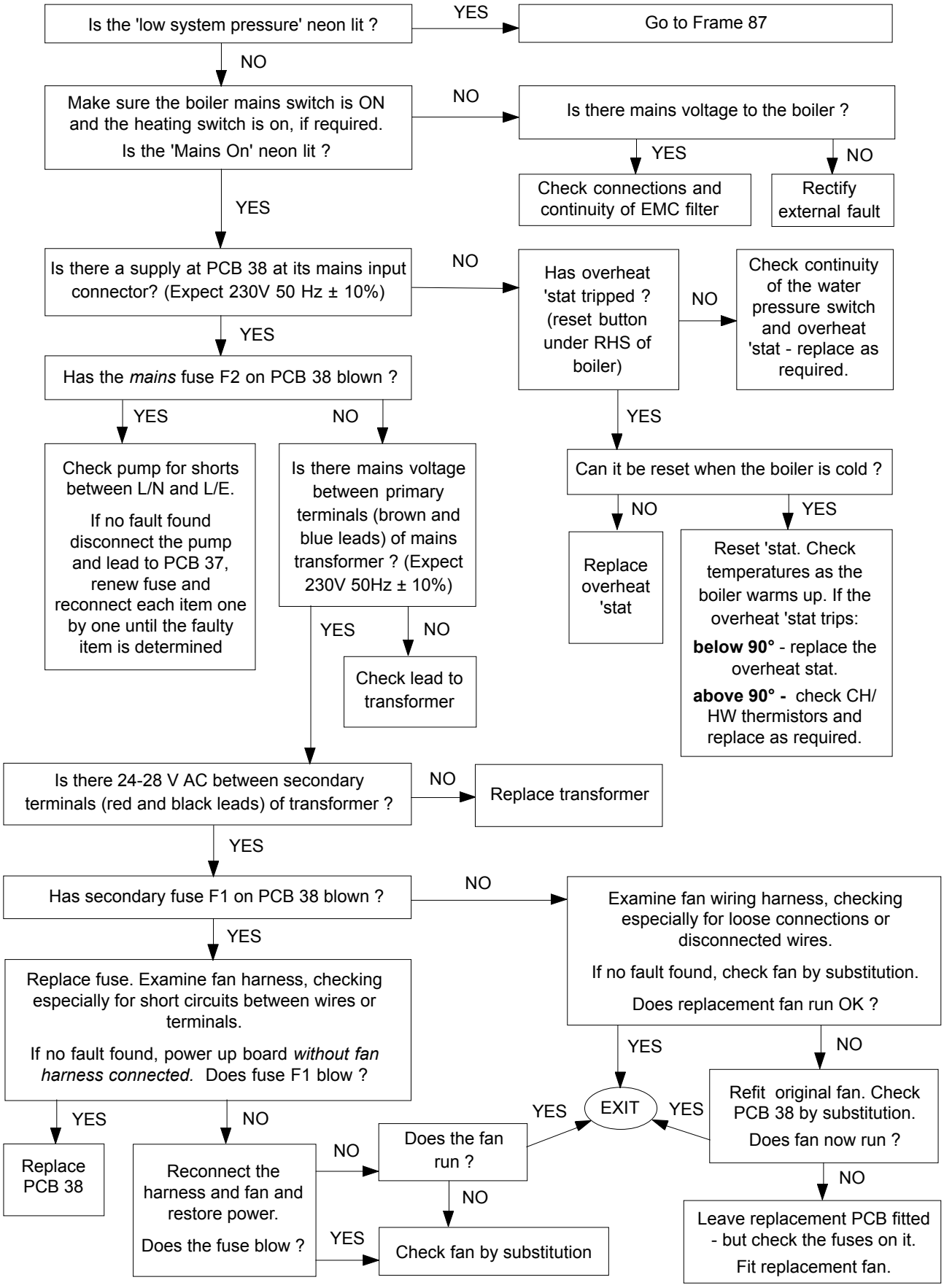

Foot Note: Presence of live supply on a terminal may be checked with a multimeter set to the appropriate AC range (apply the other probe of the meter to mains neutral, e.g. on terminal N of the programmer terminal strip).

83 Fan runs but no power on PCB 37.

Note.
When panels are removed for service, live parts are exposed so caution should be exercised when fault-finding.

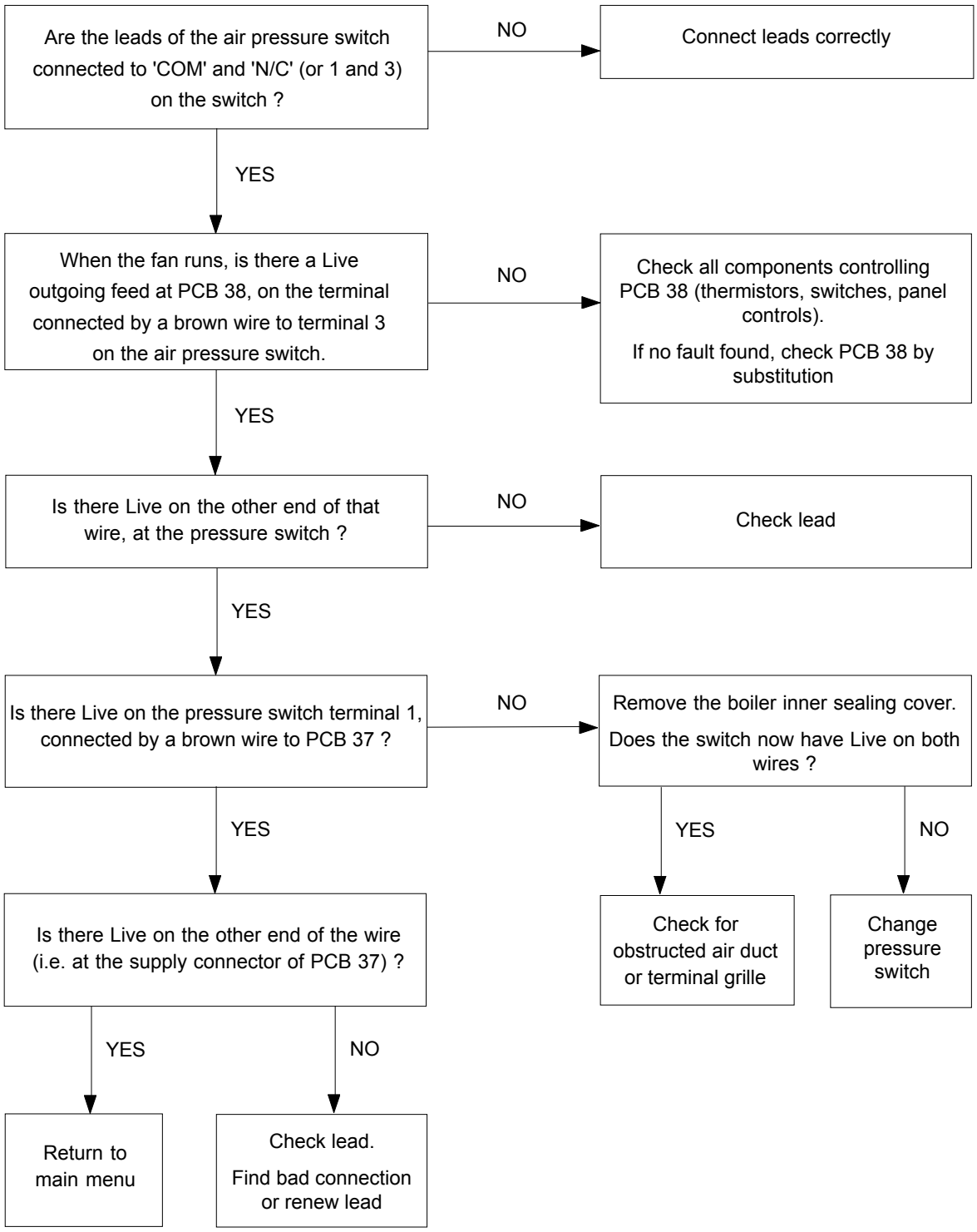

84 Power to PCB 37 but burner pressure incorrect or zero

Notes.

1. *The burner pressure is not user-adjustable: it is regulated by the gas valve, according to the air flow generated by the fan and, on cold ignition, should be slightly higher than the value quoted on the Data Plate. Long flues will cause a slightly lower burner pressure than standard flues.*
2. *Equilibrium fan differential pressures should be as detailed in Frame 45.*

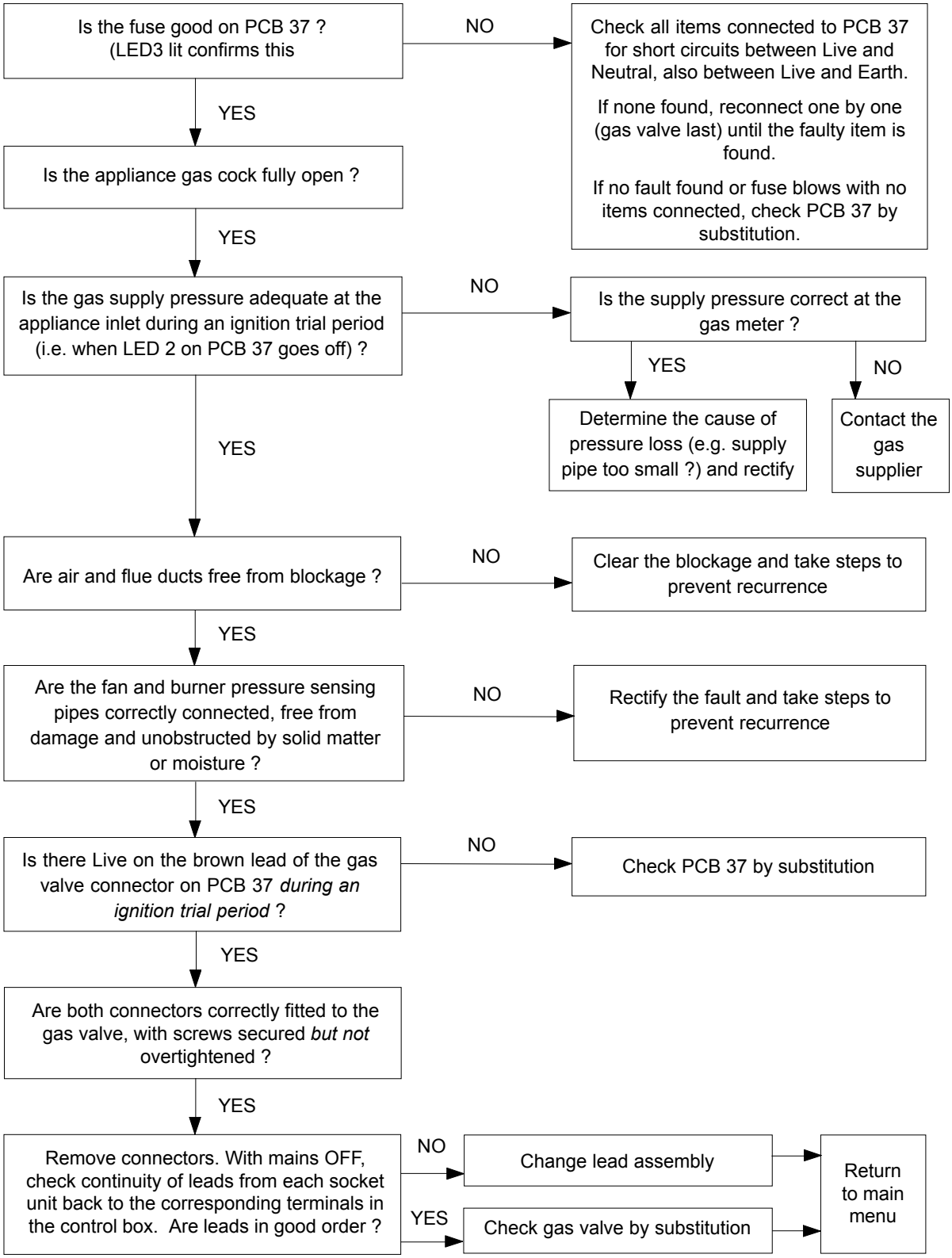

85 Spark generation and ignition

Notes.

a. *Do not attempt to measure the voltage between the spark generator output (spark) leads !*

b. *When panels are removed for service, live parts are exposed so caution should be exercised when fault-finding.*

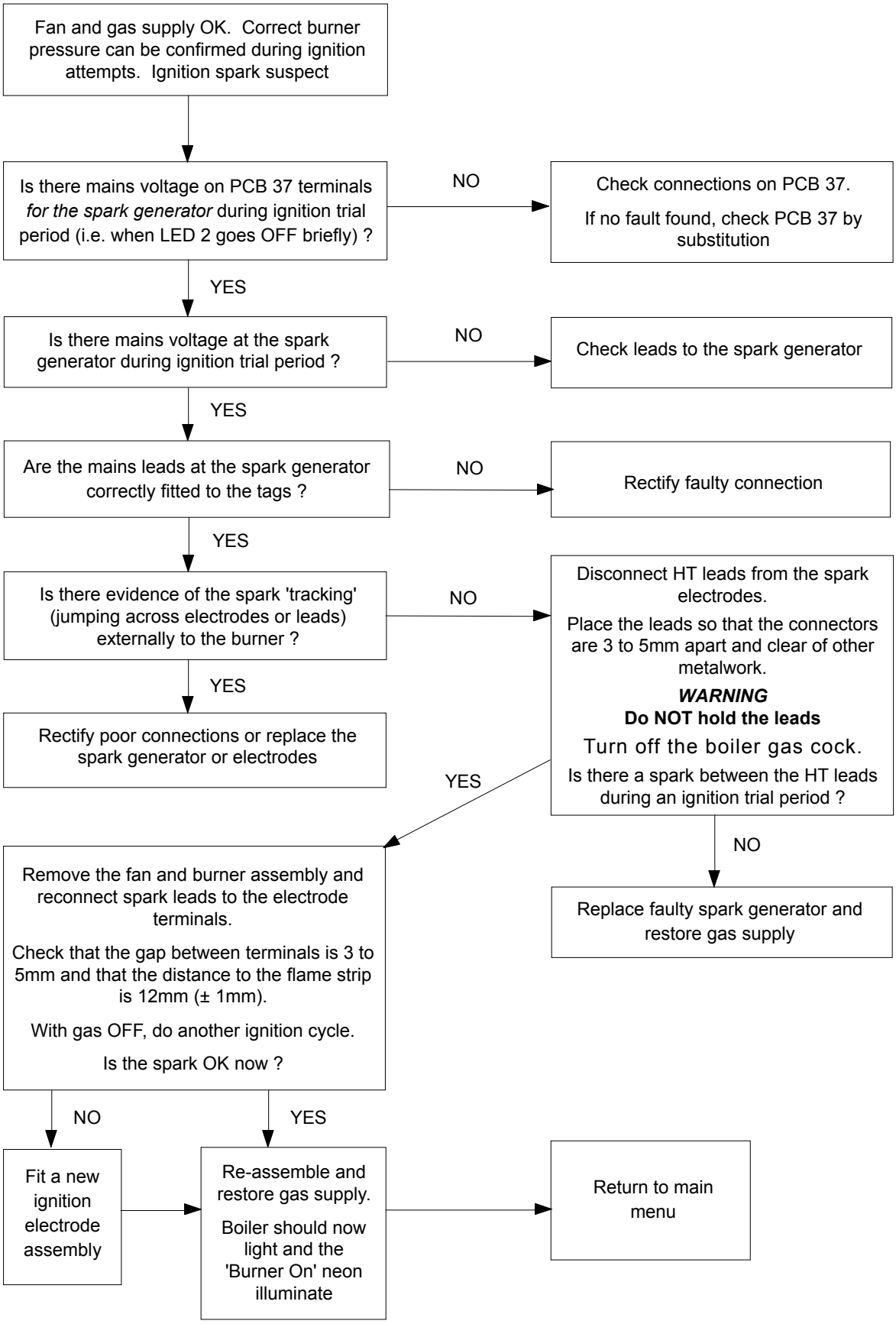

86 Flame detection and mixture

Note. *When panels are removed for service, live parts are exposed so caution should be exercised when fault-finding.*

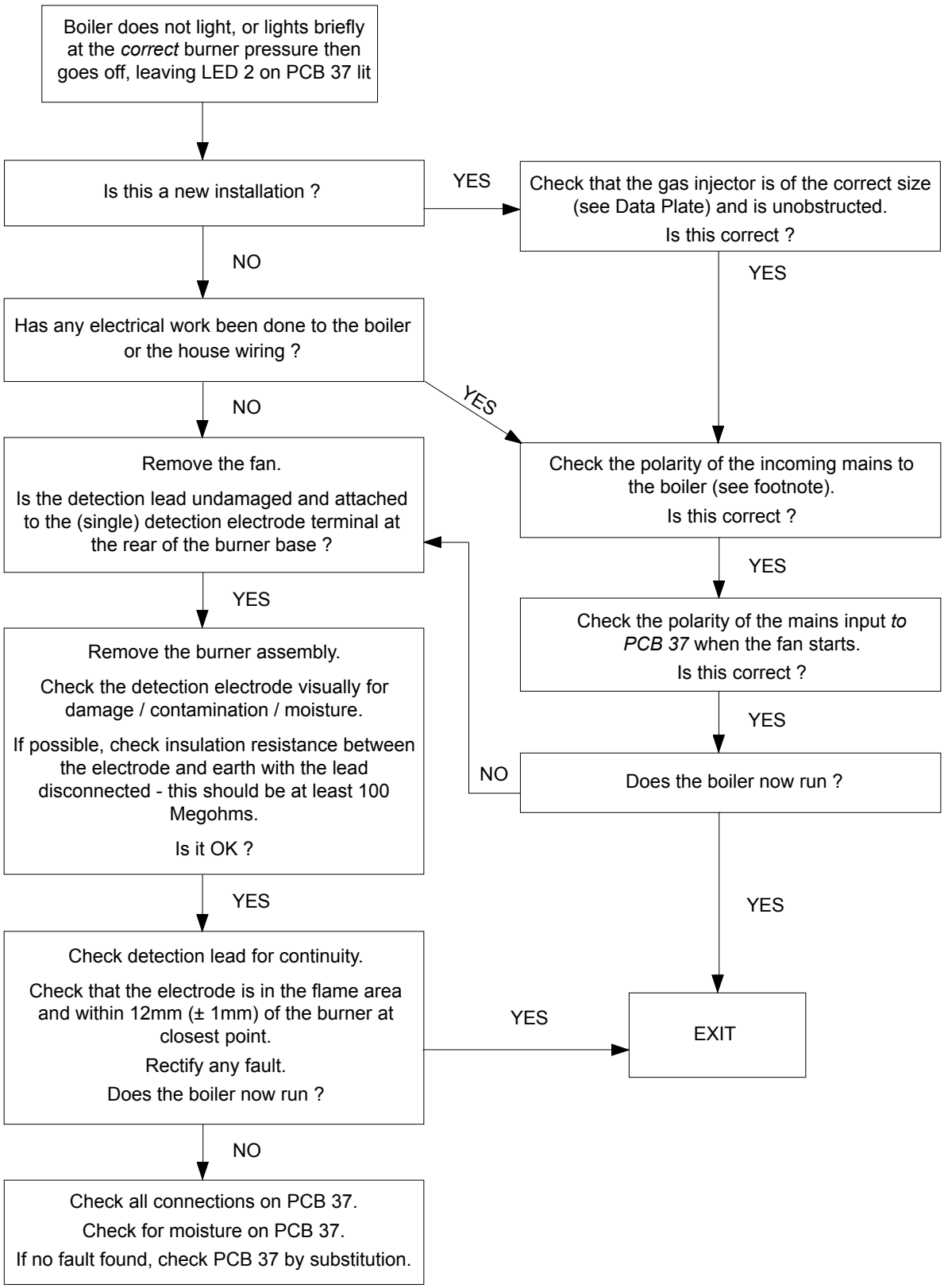

Foot Note: POLARITY CHECKS

Use a multimeter (set to measure 230 V AC or more), connecting the black lead to a reliable *Earth* point (*not Neutral for this particular test)*.

You should find 230 V on terminal L and zero (or a small reading) on terminal N.

N.B. *Some meters may trip residual current devices during this test.*

87 Low system pressure light is on.

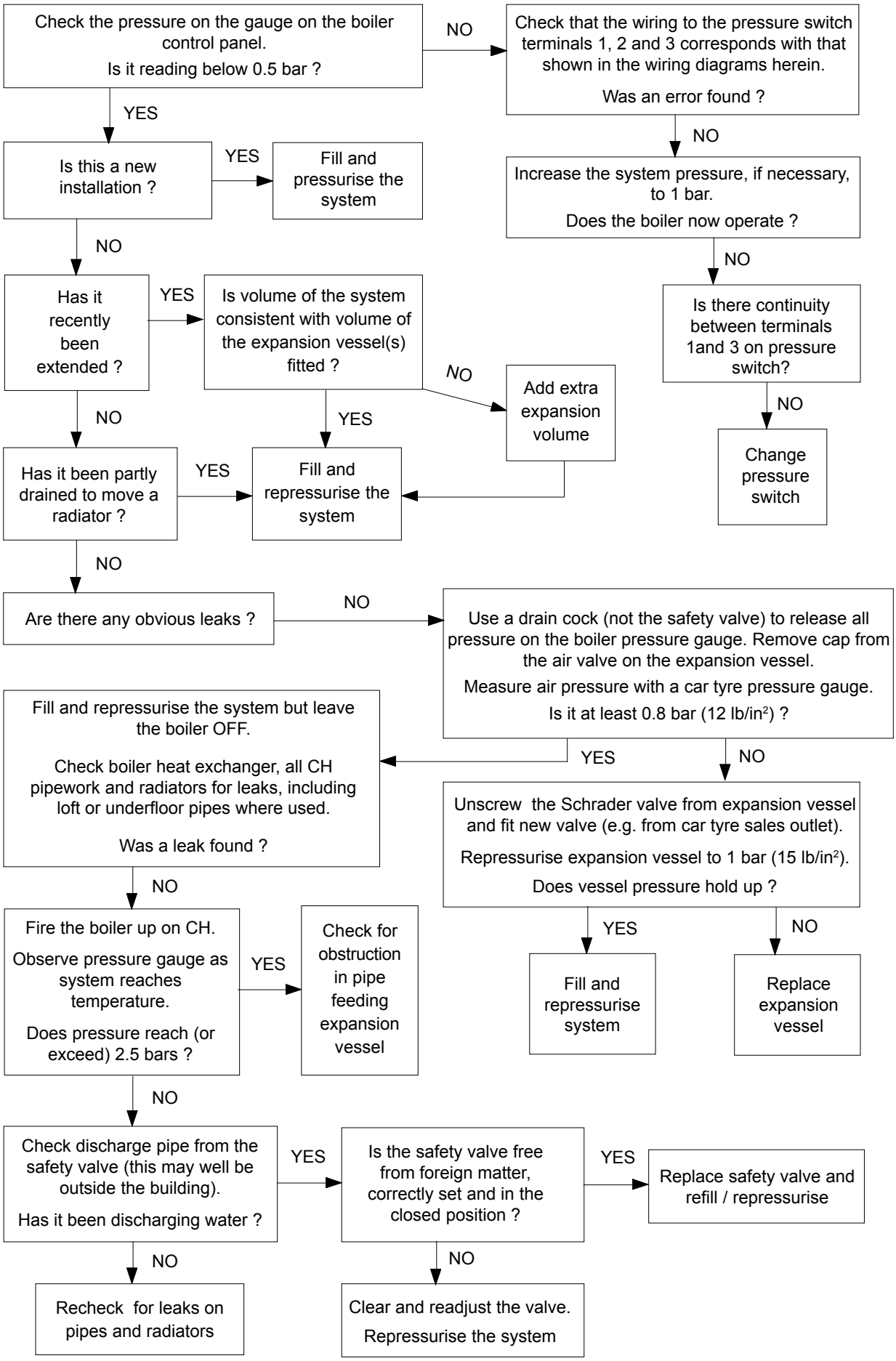

88 BURNER ASSEMBLY - Exploded View

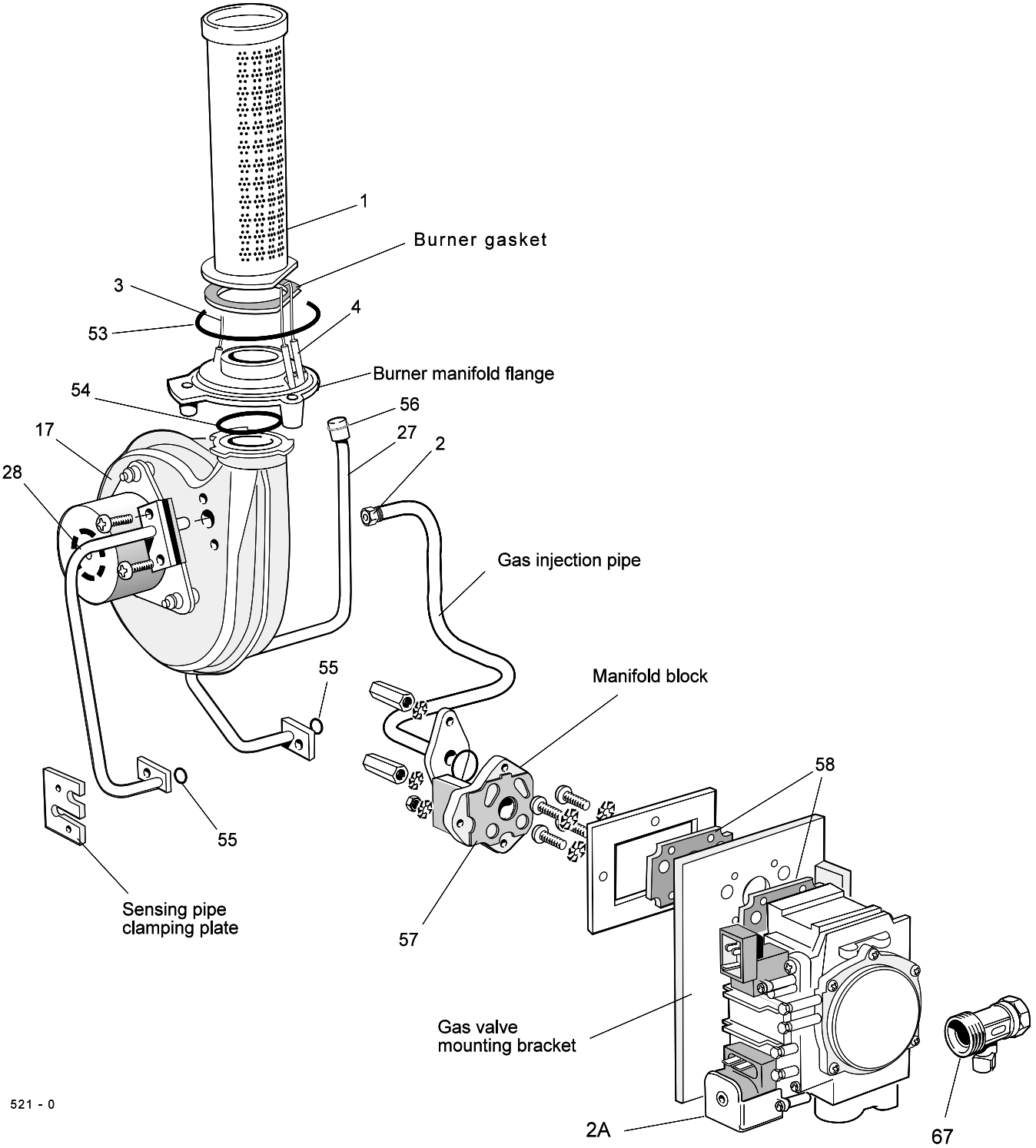

LEGEND

1.	Burner.	**17.**	Fan.	**55.**	Sensing pipe 'O' ring (manifold block end).
2.	Burner injector.	**27.**	Burner sensing pipe.	**56.**	Sensing pipe 'O' ring (burner mounting end).
2A.	Gas valve.	**28.**	Fan pressure sensing pipe.	**57.**	Gas manifold gasket.
3.	Detection electrode.	**53.**	Fan/Burner mounting 'O' ring.	**58.**	Gas valve gasket.
4.	Spark electrode.	**54.**	Fan 'O' ring.	**67.**	Gas cock 1/2".

89 CONTROLS AREA - General Arrangement

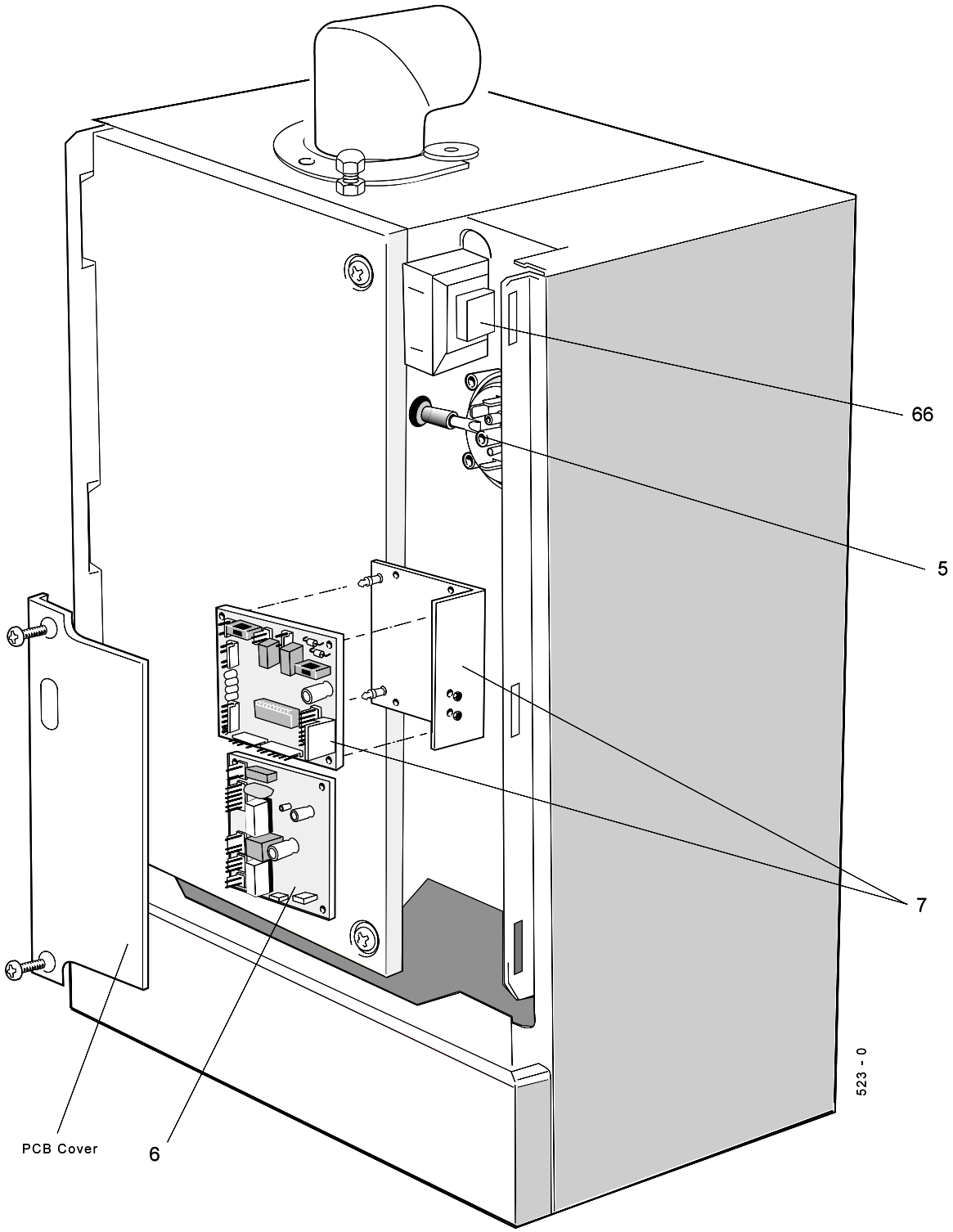

Response FF 80

5. Air pressure switch.

6. PCB 37.

7. PCB 38.

66. Mains transformer.

SHORT LIST OF PARTS

The following are parts commonly required as replacements, due to damage or expendability. Their failure or absence is likely to affect the safety and/or performance of this appliance.

The list is extracted from the British Gas List of Parts which contains all available spare parts.

The full list is held by British Gas, **Caradon Ideal** distributors and merchants.

When ordering spares please quote:

1. Boiler model (see Data Plate)
2. Appliance G.C. number (see Data Plate)
3. Description.
4. Quantity.
5. Product No.

Key No.	G.C. Part No.	Description	Qty.	Product No.
1	E00-041	Main burner FF80, c/w: 1 off burner gasket, 3 off M4 shakeproof washers, 3 off M4 x 6 lg. pozi pan hd. screws, 1 off 'O' ring, 2off graphite washers, 1 off fan and burner mount	1	075170
2	E00-042	Main burner injector (Bray cat 10 / 2300 C)	1	139745
2a	E00-043	Gas valve (SIT ref. 0.828.113) (calibrated) fitted with 1 off M5 x 20 lg. stud, c/w: 1 off gas valve gasket, 4 off M4 x 12 lg. pozi pan hd. screws, 4 off M5 x 10 lg. pozi pan hd. screws, 1 off O' ring	1	075171
3	E00-044	Flame sensing electrode (Morgan Matroc), c/w: 1 off sensing electrode gasket, 1 off M4 x 10 lg pozi pan hd. screw, 1 off M4 shakeproof washer	1	075172
4	E00-045	Ignition electrode (Morgan Matroc), c/w: 1 off ignition electrode gasket, 1 off M4 x 10 lg. pozi pan hd. screw, 1 off M4 shakeproof washer	1	075173
5	378-931	Air pressure switch (SIT ref. 0.380.064)	1	112417
6	E00-046	PCB 37 (Pactrol), c/w: 4 off PCB stand-offs	1	075174
7	E00-047	PCB 38 (Pactrol), c/w: 4 off PCB stand-offs	1	075175
8	E00-048	Spark generator assembly	1	150245
9	E00-049	Thermostat, boiler overheat (Ranco ref. LM7 T95 - 336)	1	138719
10	E00-050	Water pressure switch (SIT ref. 0.340.002), c/w: 1 off 1/4" fibre washer	1	075176
11	E00-051	Thermostat, DHW overheat (Elmwood ref. 2455R T147 / B203s), c/w: 2 off M3.5 x 6 lg. Taptite screws	1	075199
12	E00-052	CH and DHW sensor, c/w: 1 off fibre washer 10 I.D.	1	075201
13	E00-053	Harness 100 (PCB 38 to control potentiometer) - includes potentiometer	1	139829
14	E00-054	Potentiometer knob.	1	139296
15	E00-055	Pressure gauge (Imit ref. lc - 964 / 66228)	1	138953
16	E00-056	Rocker switch (Arco Electric No. H8600 VB - white) (1 off mains on/off, 1 off CH on/off switch)	1	139603
17	E00-057	Fan assembly, c/w: fan harness	1	075177
18	E00-058	Air pressure switch grommet sleeve (Robert Moss ref. 60466).	1	138943
19	E00-059	Pressure relief valve, (Caleffi CA 312433), c/w: 1 off 1/2" fibre washer, 1 off nut, 1 off 15mm olive, 1 off drain pipe	1	075178
20	E00-060	DHW expansion vessel (Zilmet ref. Zi 160 S/D 1/4"), c/w: 1 off 1/4" fibre washer.	1	075179
21	E00-061	CH expansion vessel - 8 litre (Zilmet ref. Zi 304080), c/w: 1 off 1/2" fibre washer.	1	075200

Key No.	G.C. Part No.	Description	Qty.	Product No.
22	E00-062	Circulating pump (Grundfos type UPS 15-60) with electric connections on INLET side, c/w: 2 off washers	1	075180
23	E00-063	DHW filter	1	139943
24	E00-064	DHW flow switch assembly	1	139717
25	379-796	Automatic air vent (Caleffi ref. CA 502630), including 'O' ring	1	113116
27	E00-066	Burner sensing pipe, c/w: burner mount 'O' ring, gas valve mount 'O' ring	1	075181
28	E00-067	Fan sensing pipe assembly, c/w: gasket, gas valve mount 'O' ring, 2 off M4 x 8 lg. pozi pan hd. screw	1	075182
30	E00-069	EMC filter	1	112757
31	E00-070	Sealed casing seal pack (2 off top / bottom seals, 2 off side seals)	1	075184
39	E00-078	Boiler front panel assembly	1	139792
41	E00-080	Boiler LH side panel assembly, c/w: 6 off M4 x 10 lg. pozi hex hd. screws	1	075192
42	E00-081	Boiler RH side panel assembly, c/w: 6 off M4 x 10 lg. pozi hex hd. screws	1	075193
43	E00-082	Tank cover panel assembly, c/w: 3 off M4 x 10 lg. pozi hex. hd. screws	1	075194
44	E00-083	Controls pod door assembly (FF80) consisting of: controls pod door, counter plate, Lighting Instruction Plate, 2 off buffer pads	1	075195
51	E00-090	22mm 'O' ring	1	139948
52	E00-091	15mm 'O' ring	1	139691
53	E00-092	Fan and burner mounting 'O' ring	1	138112
54	E00-093	Fan 'O' ring	1	111739
55	E00-094	Sensing pipe 'O' ring (manifold block end)	1	139945
56	E00-095	Sensing pipe 'O' ring (burner mounting end)	1	112341
57	E00-096	Gas manifold gasket	1	112043
58	E00-097	Gas valve gasket	1	111733
65	E00-104	Controls panel assembly	1	075196
66	E00-105	Transformer assembly	1	139716

90 SHORT PARTS LIST

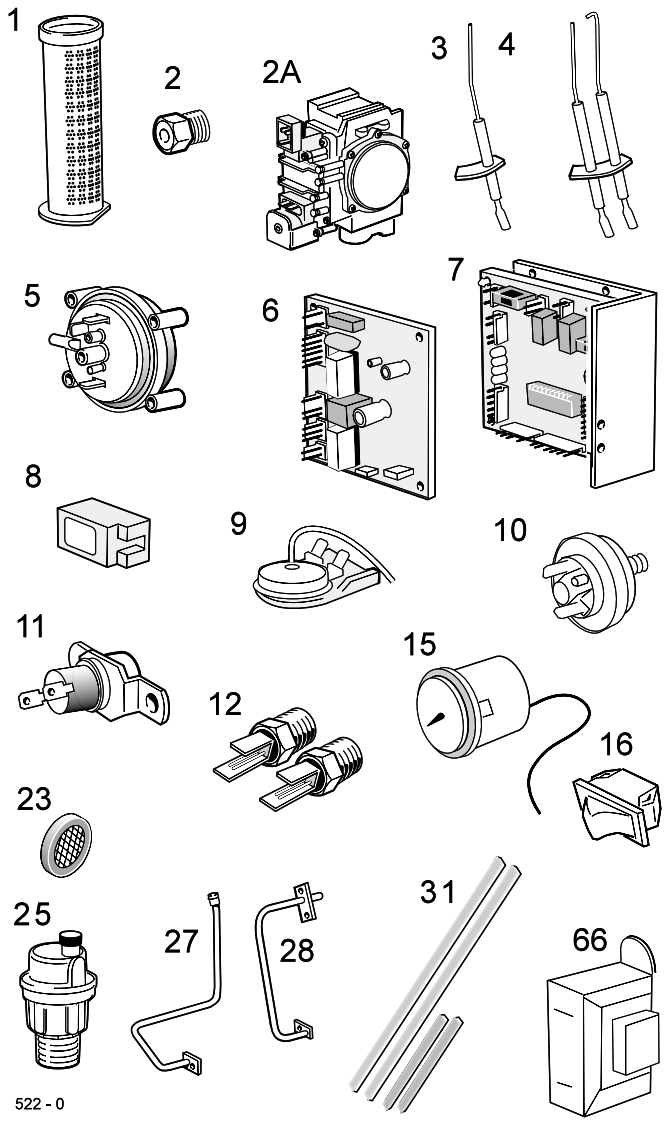

91 BOILER CASING ASSEMBLY

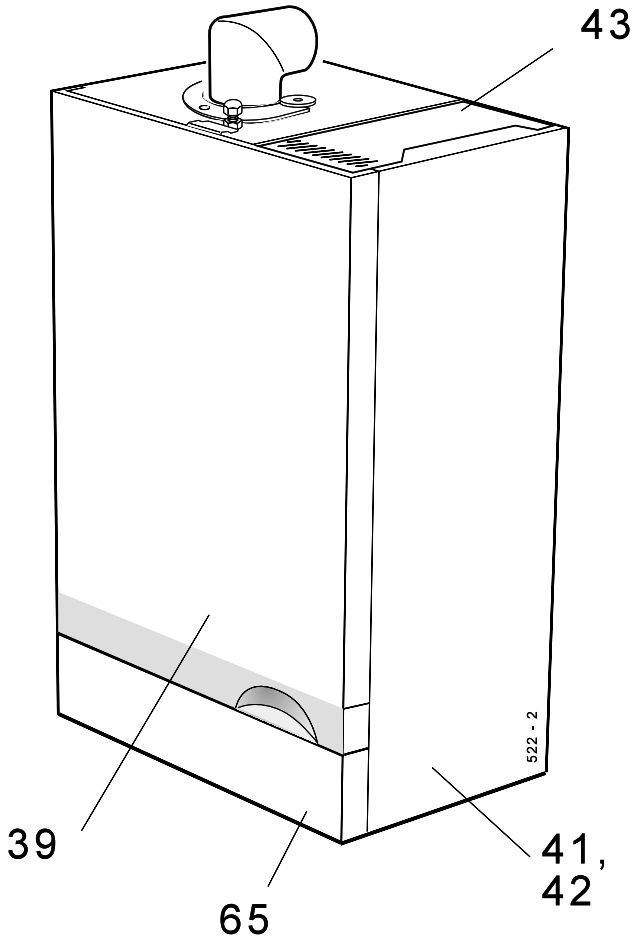

CE

Technical Training

The Caradon Ideal Technical Training Centre offers a series of first class training courses for domestic, commercial and industrial heating installers, engineers and system specifiers. For details of courses please ring:

..... *Alexa Beadle on 01482 498 432*

March 1997 138 390 A03