THE IDEAL INSTALLATION & SERVICING MANUAL

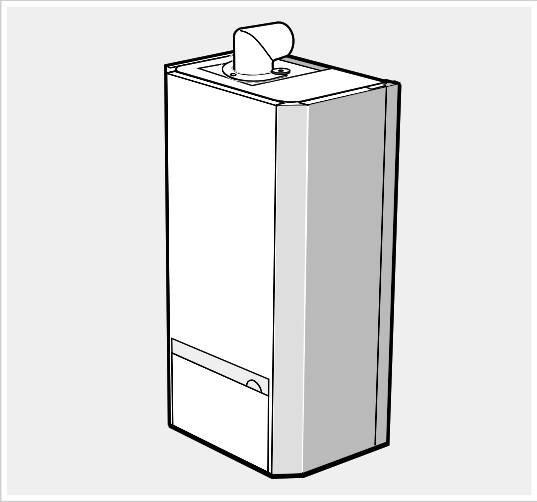

systemiser SE

the super efficiency system

Wall mounted, gas fired, fanned flue condensing system boiler

Installers guide to domestic central heating boilers

Ideal BOILERS

Systemiser SE: The condensing system boiler

The Ideal Systemiser SE is a wall mounted, fanned flue condensing system boiler which serves a home's central heating system. It has been designed to be 'friendly' to the user, installer and service engineer.

Systemiser SE: The fit anywhere system boiler

Simple fanned 'go anywhere' flue

The Systemiser SE's flue turret simply rotates through 360° to allow horizontal outlet in any direction. Options include horizontal flue length extensions or simple vertical flue kits - and the flue is self-sealing, eliminating the need for outside assembly - an important benefit in high-rise applications.

Downward or upward connections...

Water and gas connections have been designed to be as simple and fast as possible. The Ideal Systemiser SE comes complete with a rugged mounting frame which when fitted with the stand-off brackets can accommodate downward or upward routed gas, water and electrical connections before the boiler is fitted.

...and it fits inside a cupboard

Its compact size makes the Systemiser SE ideal for any kitchen. It can be installed inside a cupboard without any ventilation.

Systemiser SE: The system boiler you can rely on

The Systemiser SE has been designed and developed with reliability as the number one priority. But even the finest engineered product may develop a fault at some stage in its lifetime. To support the Systemiser SE we have created the Ideal Care Guarantee which sets out our target to repair any fault next day.

Free Guarantee: 1st Year Ideal Care

The home owner is entitled to 12 months free Ideal Care, which includes both parts and labour, to restore the boiler to full function. Please encourage the home owner to complete and return the registration form in their Householder's pack within 30 days of installation.

Optional Extra Year Cover with Ideal Care

You may wish to offer your own annual service plan or you may wish to advise the home owner to complete their application form for the appropriate level of extended Ideal Care - Silver, Gold or Platinum. Full details are available in the Ideal Care brochure.

GENERAL

Table 1 - General Data

Gas supply		2H
Gas Supply Connection		22mm copper
Flow Connection	Central Heating	22mm copper
Return Connection	Central Heating	22mm copper
Flue Terminal Diameter		100 mm
Maximum Working Pressure (Sealed Systems)		2.65 bar
Electrical Supply / Power consumption		230 V ~ 50 Hz. / 126 W
Fuse Rating		External : 3A Internal : F2A
Water content	Central Heating	2.2 litre
Dry Weight		46.5 Kg
Maximum Installation Weight		38.5 Kg
Boiler Casing Size	Height	800 mm
	Width	450 mm
	Depth	300 mm

Table 2 - Performance Data - Central Heating

		Min.	Max.
Boiler Input :			
Nett CV	kW	10.1	25.1
	Btu/h	34 500	85 700
Gross CV	kW	11.2	27.9
	Btu/h	38 200	95 200
Gas Consumption	l/s	0.29	0.72
	ft^3/h	36.8	91.5
Boiler Output :			
70 °C Mean Water Temp	kW	9.6	24.0
	Btu/h	32 800	81 900
40 °C Mean Water Temp	kW	10.9	25.7
	Btu/h	37 200	87 700
Burner Setting Pressure (HOT)	mbar	2.0	13.0
	in. w.g.	0.8	5.2
Seasonal Efficiency (SEDBUK) *		[88.4]%	

*The value is used in the UK Government's Standard Assessment Procedure (SAP) for energy rating of dwellings. The test data from which it has been calculated have been certified by Gastech NV0061.

Note. *Gas consumption is calculated using a calorific value of 38.7 MJ/m³ (1038 Btu/ft³) gross or 34.9 MJ/m³ (935 Btu/ft³) nett*

To obtain the gas consumption at a different calorific value:

a. FOR L/S *- divide the gross heat input (kW) by the gross C.V. of the gas (MJ/m³)*

b. FOR FT³/H *- divide the gross heat input (Btu/h) by the gross C.V. of the gas (Btu/ft³)*

KEY TO SYMBOLS

IE = Ireland (Countries of
GB = United Kingdom destination)

PMS = Maximum operating pressure of water

C13 = A room sealed appliance designed for connection via ducts to a horizontal terminal, which admits fresh air to the burner and discharges the products of combustion to the outside through orifices which, in this case, are concentric. The fan is up stream of the combustion chamber.

I_{2H} = An appliance designed for use on 2nd Family gas, Group H only.

CAUTION. To avoid the possibility of injury during the installation, servicing or cleaning of this appliance, care should be taken when handling edges of sheet steel components.

Systemiser SE (natural gas only) ..... **G.C. Appliance No. 41 349 70**

Gastec Certification ..... **P.I. No. 0063 AS 3355** Destination Countries: GB and IE

CONTENTS

Air Supply 6

Boiler Clearances 9

Boiler Exploded Diagram 12

Commissioning and Testing 33

Condensate Drain 11

Electrical Connections 29

Electrical Supply 9

Fault Finding 54

Flow Wiring Diagram 30

Flue Extensions 26

Flue Installation 15

Flue Lengths & Types 14

Gas Safety 6

Gas Supply 7

General Data 3

Installation 12

Mandatory Requirements 6

Safety 6

Sealed System Requirements 10

Servicing 39

Short List of Parts 56

Water and Systems 7

Water Connections 8

Water Treatment 8

Wiring Diagrams ..... 30 - 33

INTRODUCTION

The **Systemiser SE** is a wall mounted, low water content, balanced flue, condensing system boiler.

Note. *Due to the high efficiency of the boiler a plume of water vapour will form at the terminal during operation.*

Central Heating (CH) output is fully modulating between 9.6 kW (32 800 Btu/h) minimum and 24 kW (81 900 Btu/h) maximum.

The boiler is supplied fully assembled with circulating pump, pressure gauge, safety valve and central heating (CH) expansion vessel.

A variable CH temperature control is fitted.

The boiler casing is of white painted mild steel with a dropdown controls door.

The boiler controls are located behind the controls door.

The heat exchanger is of aluminium.

The boiler is suitable for connection to fully pumped, sealed water systems ONLY. Adequate arrangements for completely draining the system, by provision of drain cocks, MUST be provided in the installation pipework.

OPTIONAL EXTRA KITS

Extension Flue Kit	- Pack D
Roof Flue Kit	- for vertical flue connection
Powered Vertical Flue	- for extended vertical flue connection
Flue Elbow Kits	- 90 degree - 45 degree (2 per box)
Siphon Kit	- Pack S

Refer to the separate fitting instructions supplied with each kit.

NOTE TO THE INSTALLER: LEAVE THESE INSTRUCTIONS ADJACENT TO THE GAS METER. ALSO COMPLETE THE BENCHMARK LOG BOOK AND GIVE THIS TO THE CUSTOMER.

benchmark™

OPERATION

When there is a call for CH, the heating system is supplied at the selected temperature of between 40 °C and 82 °C,

Refer also to Frame 1- 'Boiler Water Circuit Diagram'.

The boiler features a comprehensive diagnostic system which gives detailed information on the boiler status when operating, and performance of key components to aid in commissioning and fault finding.

1 BOILER WATER CIRCUIT DIAGRAM

Central Heating Circuit

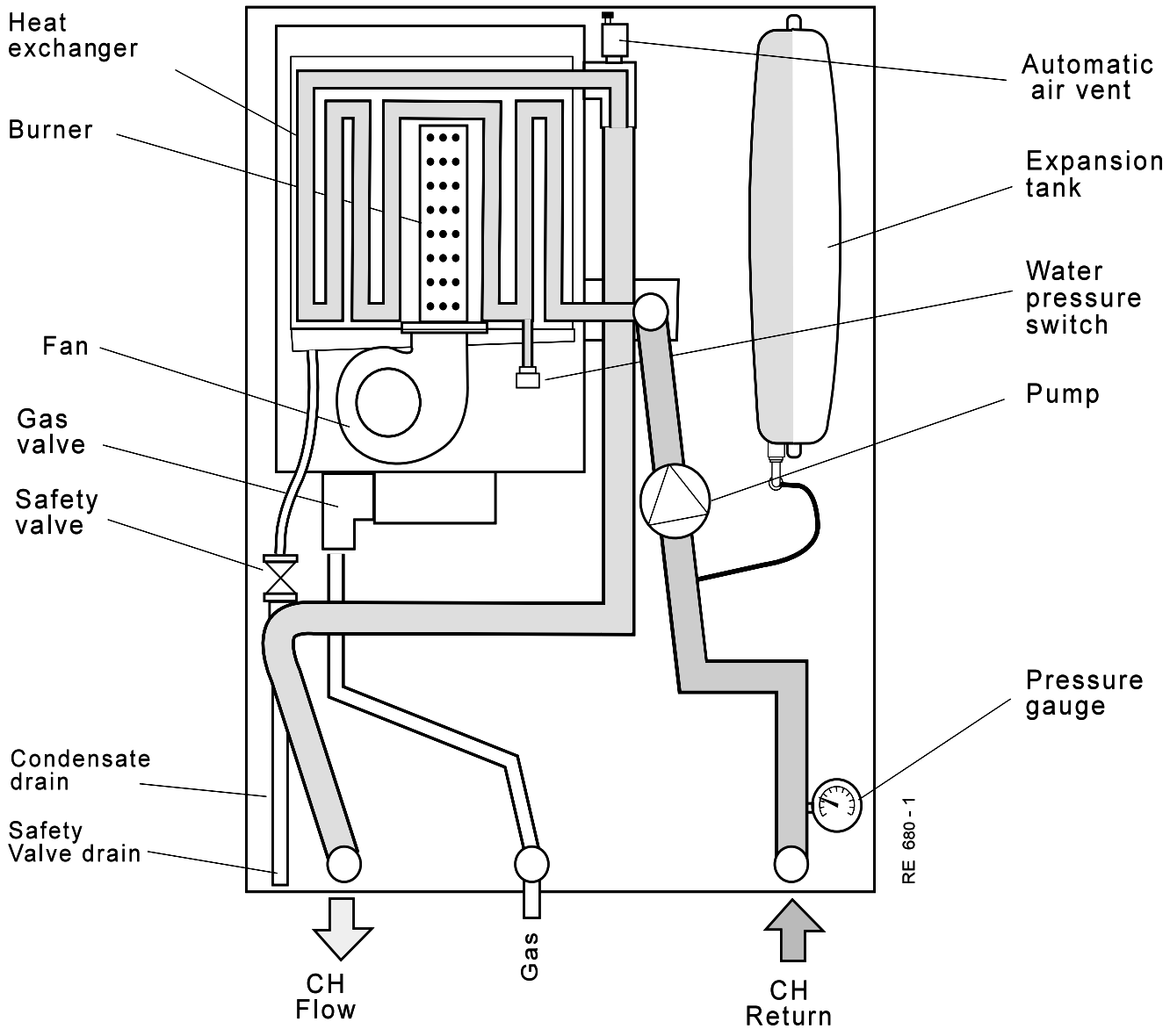

GAS SAFETY

Current Gas Safety (Installation and Use) Regulations, or rules in force.

It is law that **all** gas appliances are installed and serviced by a CORGI registered installer (identified by ❀) in accordance with the above regulations. Failure to install appliances correctly could lead to prosecution. It is in your own interest, and that of safety, to ensure the law is complied with.

The installation of the boiler MUST also be in accordance with the latest I.E.E (BS.7671) Wiring Regulations, local building regulations, bye-laws of the local water authority, the building regulations and the Building Standards (Scotland) and any relevant requirements of the local authority.

Detailed recommendations are contained in the following British Standard Codes of Practice:

BS. 5440:1	Flues (for gas appliances of rated input not exceeding 60 kW).
BS. 5440:2	Ventilation (for gas appliances of rated input not exceeding 60 kW).
BS. 5449	Forced circulation hot water systems.
BS. 5546	Installation of gas hot water supplies for domestic purposes (2nd Family Gases)
BS. 6700	Design, installation testing and maintenance of services supplying hot water for domestic use.
BS. 6798	Installation of gas fired hot water boilers of rated input not exceeding 60 kW.
BS. 6891	Low pressure installation pipes.

Health & Safety Document No. 635.

The Electricity at Work Regulations, 1989.

The manufacturer's notes must NOT be taken, in any way, as overriding statutory obligations.

SAFE HANDLING OF SUBSTANCES.

Care should be taken when handling the boiler insulation panels, which can cause irritation to the skin. No asbestos, mercury or CFCs are included in any part of the boiler.

IMPORTANT. These appliances are CE certificated for safety and performance. It is, therefore, important that no external control devices, e.g. flue dampers, economisers etc., are directly connected to these appliances unless covered by these Installation and Servicing Instructions or as otherwise recommended by **Caradon Plumbing Limited** in writing. If in doubt please enquire.

Any direct connection of a control device not approved by **Caradon Plumbing Limited** could invalidate the certification and the normal appliance warranty. It could also infringe the Gas Safety Regulations and the above regulations.

LOCATION OF BOILER AND FLUE OUTLET

The boiler must be installed on a flat and vertical wall, capable of adequately supporting the weight of the boiler and any ancillary equipment.

The boiler may be fitted on a combustible wall. Insulation between the wall and the boiler is not necessary, unless required by the local authority.

The boiler must not be fitted outside.

Timber Framed Buildings

If the boiler is to be fitted in a timber framed building it should be fitted in accordance with the Institute of Gas Engineering document IGE/UP/7:1998.

Bathroom Installations

The boiler may be installed in any room or internal space, although particular attention is drawn to the requirements of the current I.E.E. (BS.7671) Wiring Regulations and, in Scotland, the electrical provisions of the building regulations applicable in Scotland with respect to the installation of the boiler in a room or internal space containing a bath or shower.

Where a room sealed appliance is installed in a room containing a bath or shower then the appliance and any electrical switch or appliance control utilising mains electricity should be so situated that it cannot be touched by a person using the bath or shower.

Note. *It is not permissible to install a mains socket in a bathroom.*

Where installation will be in an unusual location, special procedures may be necessary and BS 6798 gives detailed guidance on this aspect.

Compartment Installations

A compartment used to enclose the boiler should be designed and constructed specially for this purpose.

An existing cupboard or compartment may be used, provided that it is modified for the purpose.

In both cases, details of essential features of cupboard / compartment design, including airing cupboard installation, are to conform to the following:

- BS.6798.
- The position selected for installation MUST allow adequate space for servicing in front of the boiler. Ventilation of the compartment is not necessary.
- For the minimum clearances required for safety and subsequent service see the wall mounting template and Frame 3. In addition, sufficient space may be required to allow lifting access to the wall mounting plate.

AIR SUPPLY

It is NOT necessary to have a purpose-provided air vent in the room or internal space in which the boiler is installed. Neither is it necessary to ventilate a cupboard or compartment in which the boiler is installed, due to the low surface temperatures of the boiler casing during operation; therefore the requirements of BS 6798, Clause 12, and BS 5440:2 may be disregarded.

GAS SUPPLY

The local gas supplier should be consulted, at the installation planning stage, in order to establish the availability of an adequate supply of gas. An existing service pipe must NOT be used without prior consultation with the local gas supplier.

A gas meter can only be connected by the local gas supplier or by a registered CORGI installer.

Check that the appliance is suitable for the proposed gas supply. A working gas pressure of 20 mbar MUST be available at the boiler inlet.

IMPORTANT.

Installation pipes MUST be fitted in accordance with BS. 6891. Pipework from the meter to the boiler MUST be 22mm O.D.

The complete installation MUST be tested for gas soundness and purged as described in the above code.

FLUE INSTALLATION

The flue must be installed in accordance with the recommendations of BS. 5440: Part 1.

The following notes are intended for general guidance:

1. The boiler MUST be installed so that the terminal is exposed to external air.
2. It is important that the position of the terminal allows the free passage of air across it at all times.
3. Minimum acceptable spacing from the terminal to obstructions and ventilation openings are specified in Table 3.
4. Pluming will occur at the terminal, so where possible, terminal positions where this could cause a nuisance should be avoided.

Table 3 - Balanced flue terminal position

N.B. *These clearances are for horizontal flue only. Refer to supplementary manual for roof flue kits.*

Terminal Position	Minimum Spacing
1. Directly below or alongside an opening window, air vent or other ventilation opening	300 mm (12")
2. Below guttering, drain pipes or soil pipes	25 mm (1")
3. Below eaves	25 mm (1")
4. Below balconies or a car port roof	25 mm (1")
5. From vertical drain pipes or soil pipes	25 mm (1")
6. From internal or external corners	25 mm (1")
7. Above adjacent ground, roof or balcony level	300 mm (12")
8. From a surface facing the terminal	600 mm (24")
9. From a terminal facing a terminal	1200 mm (48")
10. From an opening in a car port (e.g. door or window) into dwelling	1200 mm (48")
11. Vertically from a terminal on the same wall	1500 mm (60")
12. Horizontally from a terminal on the wall	300 mm (12")

Note (Positions 2-6) *: Due to the terminal design, installation is possible with clearances less than those specified in BS 5440, Part 1.*

5. Where the lowest part of the terminal is fitted less than 2m (6'6") above a balcony, above ground or above a flat roof to which people have access then the terminal MUST be protected by a purpose designed guard. The minimum spacing in Table 3, Nos. 2, 3, 4, 5 and 6 would be 75mm, in order to allow a terminal guard to be fitted.

   Terminals guards are available from boiler suppliers - ask for Tower Flue Guard, Model K1. In case of difficulty seek advice from:

   Tower Flue Components Ltd.,
   Vale Rise, Tonbridge, Kent TN9 1TB
   Telephone No. 01732 351 555

   Ensure that the guard is fitted centrally.
6. Where the terminal is fitted within 850mm (34") of a plastic or painted gutter or 450mm (18") of painted eaves then an aluminium shield at least 750mm (30") long should be fitted to the underside of the gutter or painted surface fitted centrally above the flue.
7. The air inlet/products outlet duct and the terminal of the boiler MUST NOT be closer than 25mm (1") to combustible material. Detailed recommendations on the protection of combustible material are given in BS. 5440: 1990.
8. Where it is essential that the terminal wall plate is fitted, i.e. wall thicknesses over 610mm (24") or with an inaccurately cut hole, the minimum spacing in Table 3, Nos. 2, 3, 4, 5 and 6 would be 60mm (2.4") in order to allow the terminal wall plate to be fitted.

IMPORTANT. It is the responsibility of the installer to ensure, in practice, that products of combustion discharging from the terminal cannot re-enter the building or any other adjacent building through ventilators, windows, doors, other sources of natural air infiltration, or forced ventilation / air conditioning.

If this should occur the appliance MUST be turned OFF, labelled as 'unsafe' until corrective action can be taken.

FLUE LENGTHS

The flue assembly can be adapted to accommodate flue lengths up to 3 metres. Refer to Frame 10.

WATER CIRCULATION SYSTEM

The boiler is designed for connection to pressurised, fully pumped, sealed water central heating systems ONLY.

The central heating system should be installed and commissioned in accordance with BS. 6798 and, in addition, for smallbore and microbore systems BS. 5449.

The domestic hot water system should be in accordance with BS. 5546 and BS. 6700.

Copper tubing to BS 2871:1 is recommended for water carrying pipework and MUST be used for pipework carrying potable water.

Any soldered joints on potable water pipework MUST NOT be made with solder containing lead.

Ancillary pipework not forming part of the useful heating surface should be lagged to prevent heat loss and any possible freezing - particularly where pipes run through roof spaces or ventilated underfloor spaces.

Draining taps should be at least 1/2" BSP nominal size and be in accordance with BS 2879.

Maximum recommended system hydraulic losses are given in within Frame 4.

WATER TREATMENT

The Systemiser SE has an aluminium heat exchanger. If water treatment is used **Caradon Plumbing Limited** recommend only the of Fernox-Copal or Sentinel X100 water treatment products, which must be used in accordance with the manufacturers' instructions.
For further information contact either:

Fernox Manufacturing Co. Ltd
Tandem House
Marlowe Way
Croydon, Surrey
CRO 4XS

Tel: 0870 5601 5000

or

Betz Dearborn Ltd.
Widnes
Cheshire

Tel. 0151 424 5351

IMPORTANT.
The application of any other treatment to this product will render the guarantee of **Caradon Plumbing Limited** invalid.

Notes.

1. *It is most important that the correct concentration of the water treatment product is maintained in accordance with the manufacturers' instruction.*
2. *If the boiler is installed in an existing system any unsuitable additives must be removed by thorough cleansing. BS. 7593:1992 details the steps necessary to clean a domestic central heating system.*
3. *In hard water areas, treatment to prevent limescale may be necessary. However, the use of artificially softened water is not permitted.*
4. *Under no circumstances should the boiler be fired before the system has been thoroughly flushed.*

THERMOSTATIC RADIATOR VALVES (TRV)

Caradon Plumbing Limited recommend that heating systems utilising full thermostatic radiator valve control of temperature in individual rooms should also be fitted with a room thermostat controlling the temperature in a space served by radiators not fitted with such a valve as stated in BS. 5449.

When thermostatic radiator valves are used a bypass should be fitted, ensuring it is at least 3m from the boiler. The bypass should have at least 6m of flow and return pipe of a minimum 22mm diameter.

For further information refer to the 'Good Practice Guide 143', a publication of the Energy Efficiency Office, available from the Building Research Establishment, Garston, Watford WD2 7JR. Tel: 01923 664258.

2 BOILER WATER CONNECTIONS

The CH flow and return pipe connections are located at the bottom of the boiler.

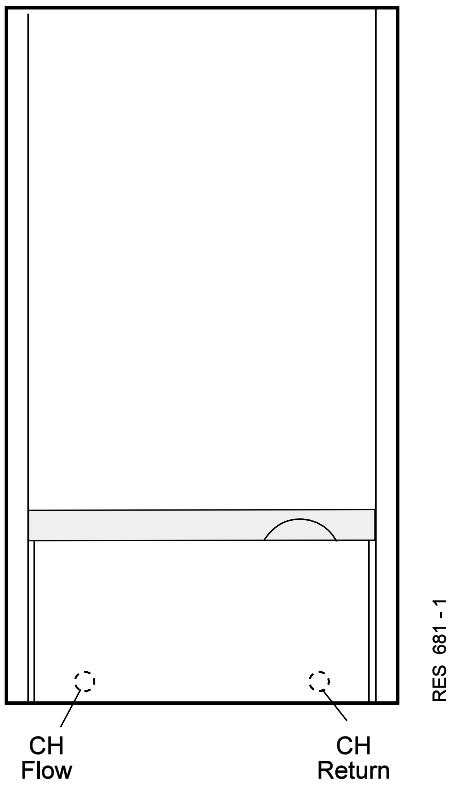

ELECTRICAL SUPPLY

WARNING. This appliance must be efficiently earthed.

Wiring external to the appliance MUST be in accordance with the current I.E.E. (BS.7671) Wiring Regulations and any local regulations which apply.

The point of connection to the mains should be readily accessible and adjacent to the boiler, except for bathroom installations where the point of connection to the mains MUST be situated outside of the bathroom.

Note. *Where a room sealed appliance is installed in a room containing a bath or shower then the appliance and any electrical switch or appliance control utilising mains electricity should be so situated that it cannot be touched by a person using the bath or shower.*

3 BOILER CLEARANCES

The following minimum clearances must be maintained for operation and servicing.

Additional space will be required for installation, depending upon site conditions.

Front clearance: 450 mm from the front of the boiler casing. The minimum front clearance when built in to a cupboard is 5mm.

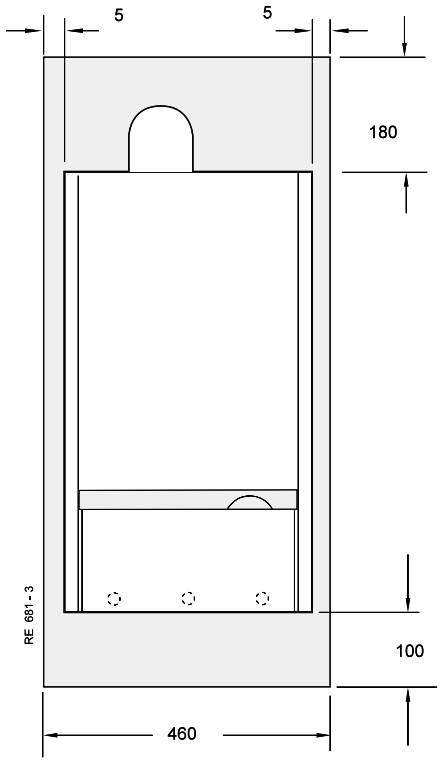

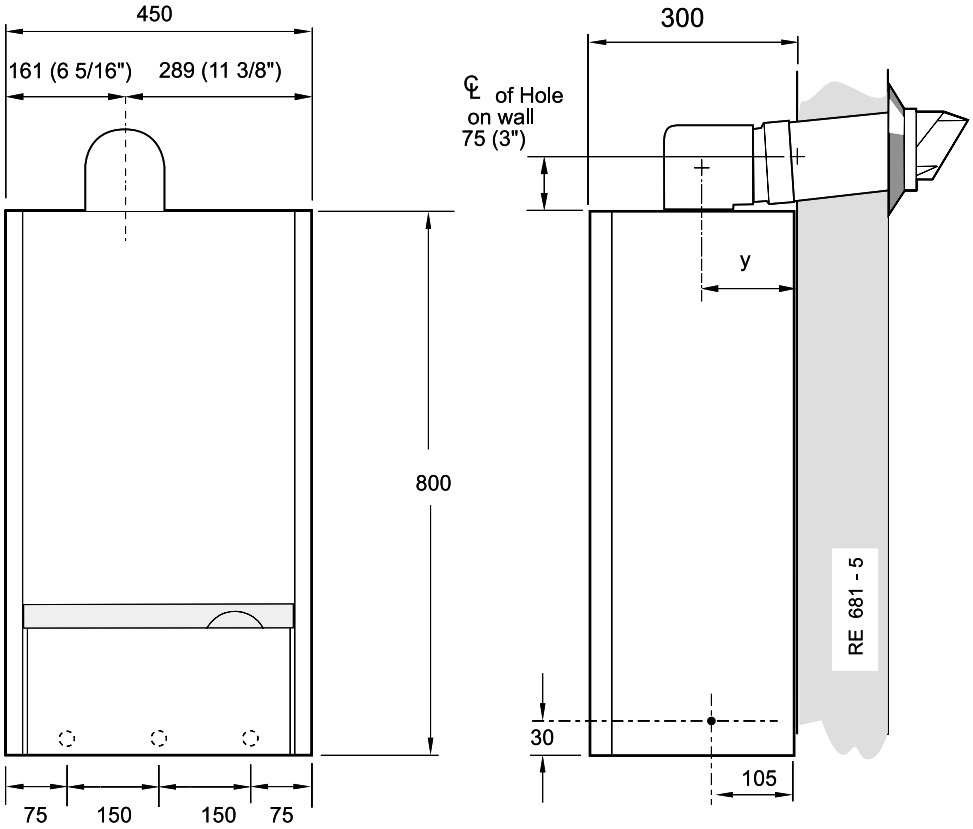

Dimension y

Boiler only	with stand-off brackets
139mm (5 (7/16")	219mm (8 5/8")

For side outlet flues:

Raise the centre line of the hole in the wall by 5mm +4mm/100mm of flue length

4 SYSTEM REQUIREMENTS - Central Heating

Notes

a. *The method of filling, refilling, topping up or flushing sealed primary hot water circuits from the mains via a temporary hose connection is only allowed if acceptable to the local water authority.*

b. *Antifreeze fluid, corrosion and scale inhibitor fluids suitable for use with boilers having aluminium heat exchangers may be used in the central heating system.*

Advice should be sought from a local water treatment company.

Safety valve setting	bar	3.0	
Vessel charge pressure	bar	0.5 to 0.75	
System pre-charge pressure	bar	None	1.0
System volume (litres)		**Expansion vessel volume (litres)**	
25		1.6	1.8
50		3.1	3.7
75		4.7	5.5
100		6.3	7.4
125		7.8	9.2
150		9.4	11.0
175		10.9	12.9
190		11.9	14.0
200		12.5	14.7
250		15.6	18.4
300		18.8	22.1
For other system volumes multiply by the factor across		0.063	0.074

General

1. The installation must comply with all relevant national and local regulations.

2. The installation should be designed to work with flow temperatures of up to 82 ^{0}C.

3. All components of the system must be suitable for a working pressure of 3 bar and temperature of 110 ^{0}C. Extra care should be taken in making all connections so that the risk of leakage is minimised.

The following components are incorporated within the appliance:

a. Circulating pump.

b. Safety valve, with a non-adjustable pre-set lift pressure of 3 bar.

c. Pressure gauge, covering a range of 0 to 6 bar.

d. A 9-litre expansion vessel, with an initial charge pressure of 0.75 bar.

4. **'Make-up' Water.** Provision must be made for replacing water loss from the system, either :

a. From a manually filled 'make-up' vessel with a readily visible water level. The vessel should be mounted at least 150mm above the highest point of the system and be connected through a non-return valve to the system, fitted at least 150mm below the 'make-up' vessel on the return side of the radiators.

or

b. Where access to a 'make-up' vessel would be difficult, by pre-pressurisation of the system.

The maximum cold water capacity of the system should not exceed 143 litres, if not pressurized. However, if the system is to be pressurized, the efficiency of the expansion vessel will be reduced and a larger vessel (or smaller system volume) may be necessary. If the capacity of the vessel is not considered sufficient for this, or for any other reason, an additional vessel MUST be installed on the return to the boiler.

Guidance on vessel sizing is given above.

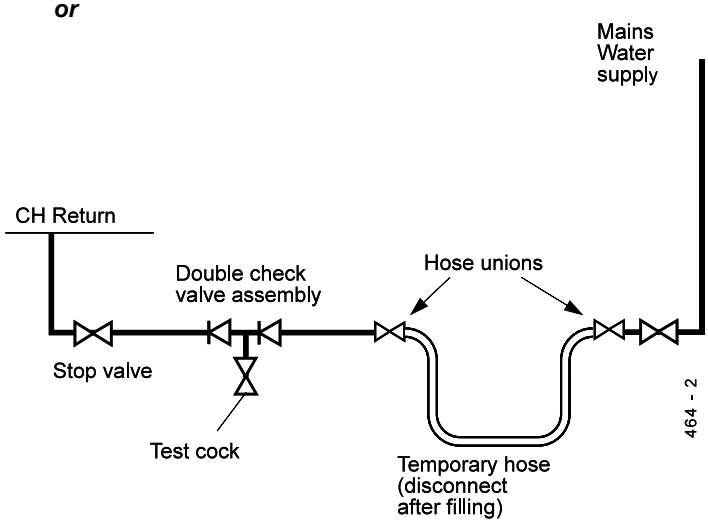

System filling and make-up

5 SYSTEM REQUIREMENTS - CH (continued)

5. Filling. The system may be filled by one of the following methods:

a. Through a temporary hose connection from a 'draw-off' tap, supplied from a service pipe under mains pressure. Where the mains pressure is excessive, a pressure reducing valve must be used to facilitate filling.

i. Thoroughly flush out the whole system with cold water.

ii. Fill and vent the system until the pressure gauge registers 1.5 bar, and examine for leaks.

iii. Check the operation of the safety valve by raising the water pressure until the valve lifts. This should occur within 0.3 bar of the pre-set lift pressure.

iv. Release water from the system until the minimum system design pressure is reached; 1.0 bar if the system is to be pre-pressurised.

Water Flow Rate and Pressure Loss

Boiler size	**24**
System Load	24 kW
Water Flow Rate	0.51 l/s
Temperature Differential	11 °C
Pressure available	29 kPa
for system	2.9 m

6 SYSTEM BALANCING

The boiler does not normally need a bypass but at least some radiators on the heating circuit, of load of at least 60% of the boiler output, at minimum rate i.e. 60% of 10.1 kW (34 500 Btu's) equal 6kW (21 000 Btu's) must be provided with twin lockshield valves so that this minimum heating load is always available.

Note.

Systems incorporating zone valves which could completely cut off the flow through the system, must be wired such that the boiler will not fire or continue to fire when this occurs.

BALANCING

1. Set the programmer to ON.

Close the manual or thermostatic valves on all radiators, leaving the twin lockshield valves (on the radiators referred to above) in the OPEN position.

Turn up the room thermostat and adjust these lockshield valves to give boiler flow and return temperatures not more than 15 °C apart.

These valves should now be left as set.

2. Open all manual or thermostatic radiator valves and adjust the lockshield valves on the remaining radiators, to give around 11 °C temperature drop at each radiator.

3. Adjust the room thermostat and programmer to NORMAL settings.

7 CONDENSATE DRAIN

Refer to Frame 33.

Refer also to the British Gas document: **'Guidance Notes for the Installation of Domestic Gas Condensing Boilers' (1989)**

A condensate drain is provided on the boiler. This drain must be connected to a drainage point on site.

All pipework and fittings in the condensate drainage system MUST be made of PLASTIC - *no other materials may be used.*

The drain outlet on the boiler is standard 22mm overflow pipe.

IMPORTANT

External pipe runs must be insulated to prevent possible freezing.

A Siphon Kit is available see instructions supplied with the kit.

8 BOILER ASSEMBLY - Exploded View

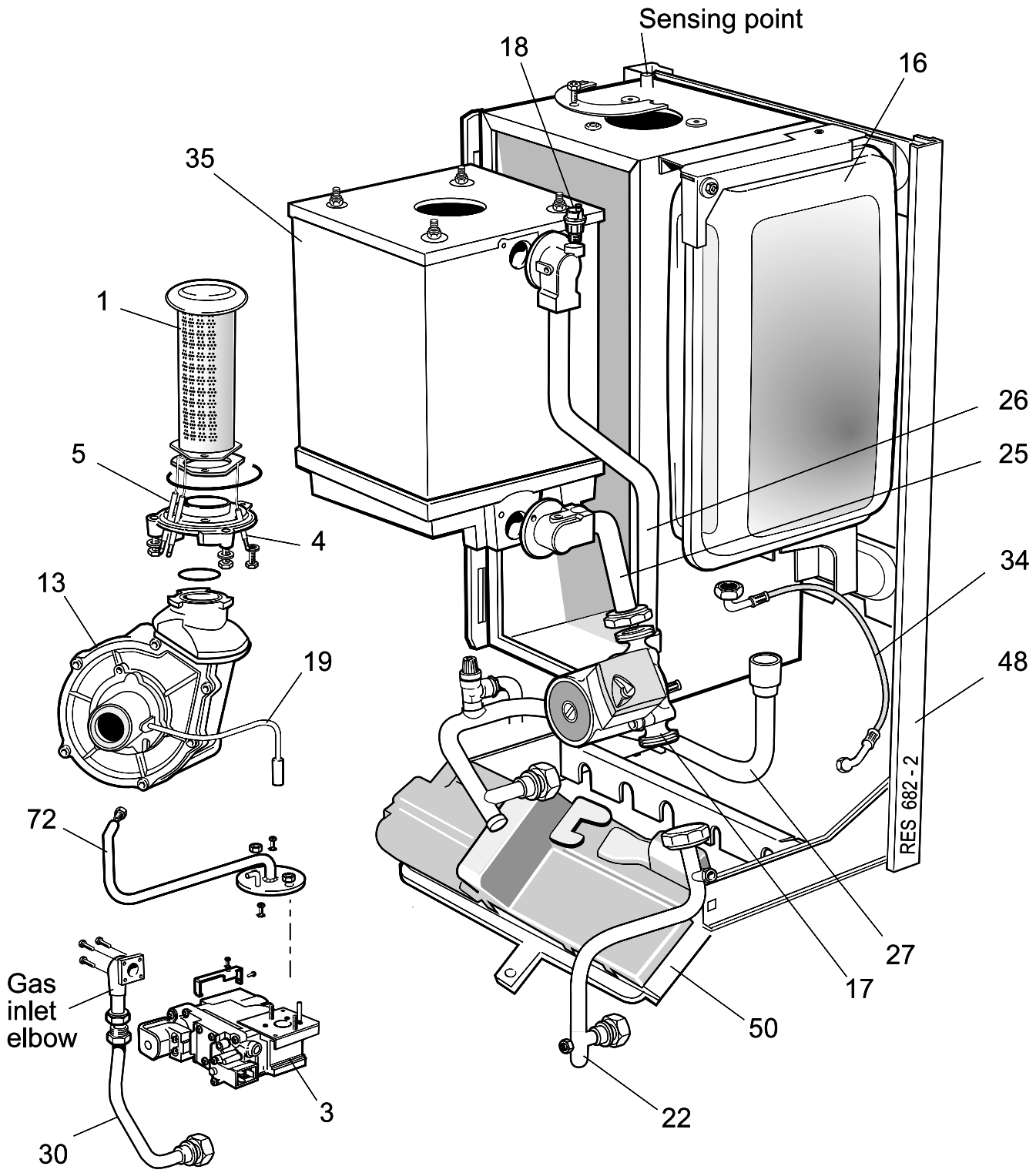

Legend

1.	Burner	**16.**	Expansion vessel	**26.**	Boiler flow pipe	**50.**	Control panel
3.	Gas valve	**17.**	Pump	**27.**	System flow pipe	**72.**	Gas injection pipe
4.	Detection electrode	**18.**	Automatic air vent	**30.**	Gas inlet pipe		
5.	Ignition electrodes	**22.**	System return pipe	**35.**	Heat exchanger		
13.	Fan	**25.**	Pump outlet pipe	**48.**	Prepiping frame		

9 UNPACKING

Unpack and check the pack contents

The boiler

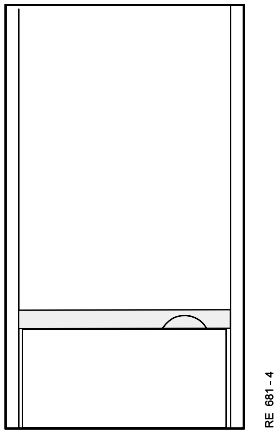

Piping frame

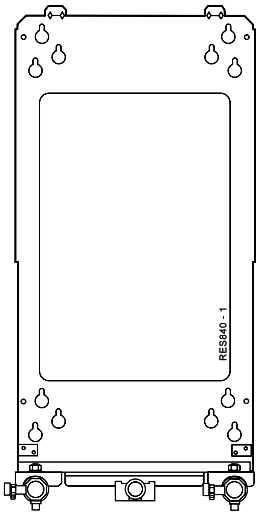

PACK CONTENTS

- Complete boiler assembly
- Hardware Pack (listed separately below)
- Wall mounting plate
- Wall mounting template
- These Installation and Servicing Instructions
- User's Instructions
- Stand-off brackets (*optional use*) (1 pair)
- Concealment panels (*optional use*) (1 pair)

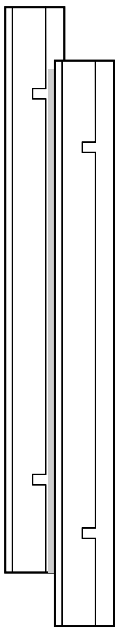

Concealment panels

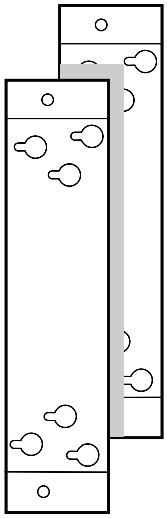

Stand-off brackets

HARDWARE PACK

M6 x 10 Pozi pan screw	-	4 off
M6 shakeproof washer	-	4 off
No. 14 x 50mm slotted rd. hd. screw	-	4 off
Wall plug (brown)	-	4 off
Condensate drain adaptor	-	1 off
1/2" sealing washer	-	3 off
3/4" sealing washer	-	3 off
15mm olive	-	3 off
22mm olive	-	2 off
Turret seal	-	1 off
15mm compression nut	-	2 off
22mm compression nut	-	2 off
15mm pipe connector	-	2 off
22mm - 15mm reducing coupling	-	1 off
1/2" - 15mm adaptor	-	1 off
15mm street elbow	-	1 off
22mm street elbow	-	2 off
Pressure relief valve outlet pipe	-	1 off
Pressure relief valve nut	-	1 off
3-way plug	-	1 off

Pack B Contents

No. 8 x 8mm self tapping screws - 2 off.
Flue support cutting aid - 1 off.
No.10 x 2" screws - 4 off.
Rawlplugs - 4 off.

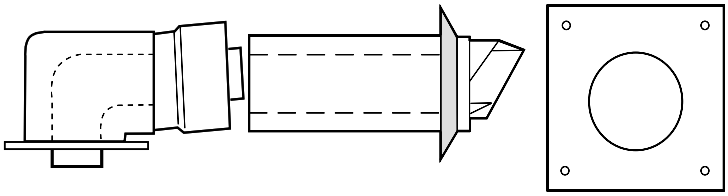

Flue turret assembly Flue terminal Terminal wall plate

10 DETERMINING THE FLUE LENGTH AND FLUE PACKS REQUIRED

Dimension X - Wall thickness

Dimension Y - Wall thickness plus boiler spacing (RHS)

Dimension Z - Wall thickness plus boiler spacing (LHS)

Calculate the total length of flue by the following:

Rear flue length = Dim. X + 40mm (1 5/8")
RHS flue length = Dim. Y + 188mm (7 3/8")
LHS flue length = Dim. Z + 61mm (2 3/8")

Note.
These figures include the length of flue entering the flue turret socket.

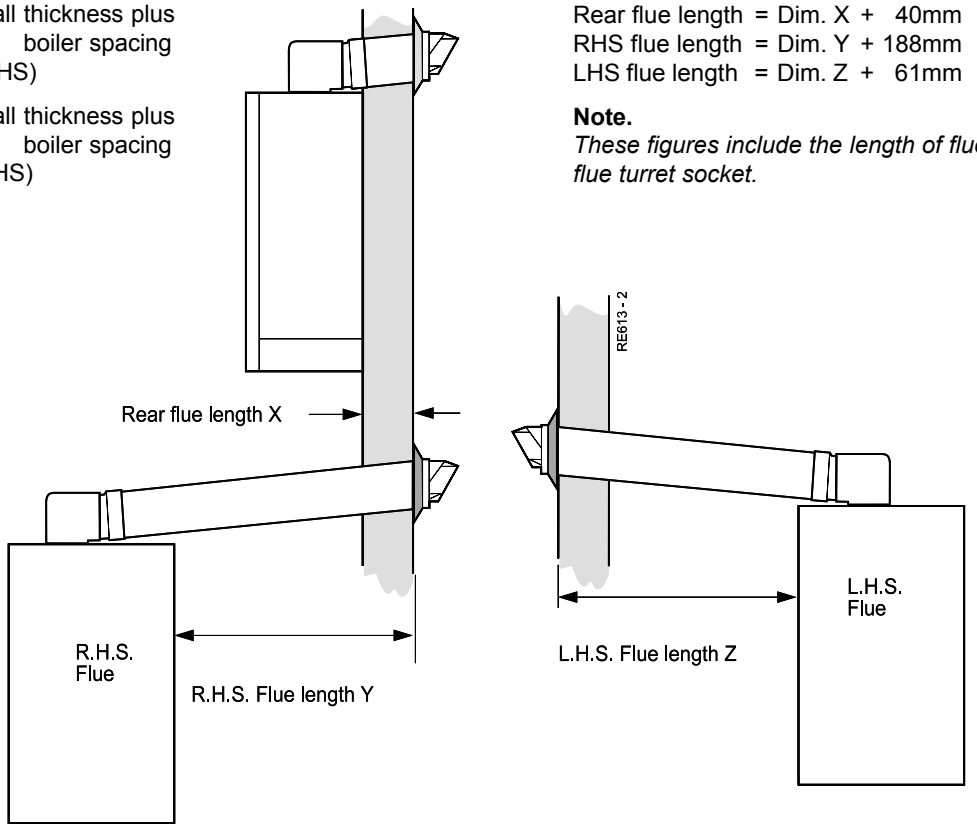

IMPORTANT.

The boiler MUST be installed in a vertical position.

Note. The *flue duct MUST be inclined at 2.5° to the horizontal to allow condensate to drain back into the boiler and out through the condensate drain.*

Table. Flue pack requirements

Flue length dimension			Flue
Rear flue dimn. X	**Right hand side flue dimn. Y**	**Left hand side flue dimn. Z**	**packs required**
114 - 580 mm (4 1/2" - 22 3/4")	114 - 410 mm (4 1/2" - 16")	114 - 540 mm (4 1/2" - 21 1/4")	Pack B - 1 off
580 - 1530 mm (22 3/4" - 60 1/4")	410 - 1360 mm (16" - 53 1/2")	540 - 1490 mm (21 1/4" - 58 1/2")	Pack B - 1 off & Pack D - 1 off
1530 - 2480 mm (60 1/4" - 97 3/4")	1360 - 2310 mm (53 1/2" - 90 3/4")	1490 - 2440 mm (58 1/2" - 96")	Pack B - 1 off & Pack D - 2 off
2480 - 3000 mm (97 3/4" - 118")	2310 - 3000 mm (90 3/4" - 118")	2440 - 3000 mm (96" - 118")	Pack B - 1 off & Pack D - 3 off

FLUE KITS

Pack B
supplied as standard.

Pack D
optional extension kit for side flue or rear flue outlet 1000 mm long. Refer to 'Flue Extension Ducts'

Vertical Flue
see optional extras.

For ***REAR*** **outlet flue** Go to Frame 11
For ***SIDE*** **outlet flue** Go to Frame 21

11 REAR FLUE ASSEMBLY - Exploded View

1. An optional flue duct extension kit is required for rear flue lengths greater than 580mm (22 3/4"). Refer to Frame 11.
2. When cutting the ducts always use the cardboard support cutting aid provided.

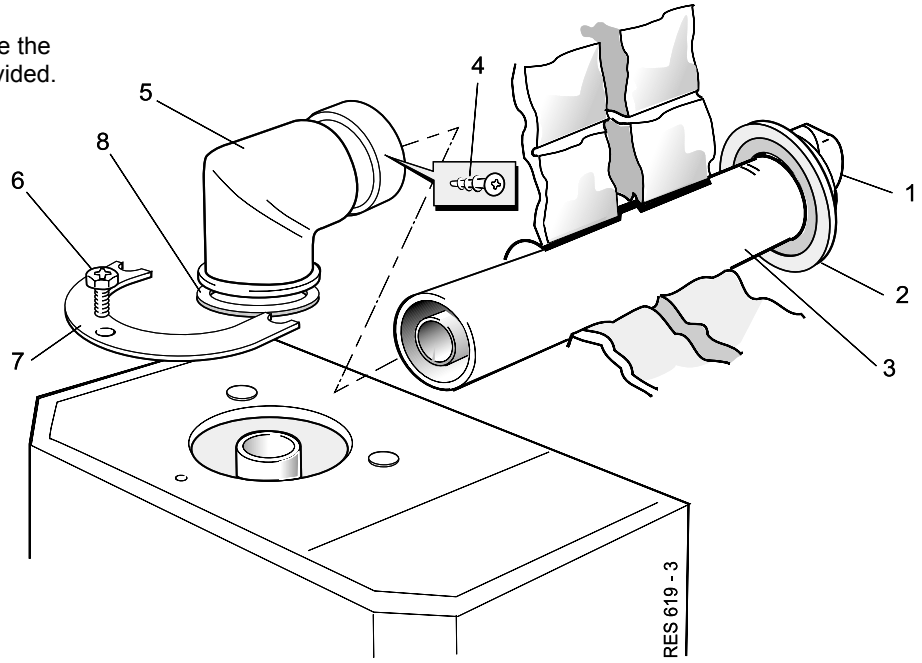

LEGEND

1. Terminal.
2. Weather seal.
3. Duct assembly.
4. No. 8 x 8 self-tapping screw.
5. Flue Turret.
6. M5 x 10 pozi screw.
7. Turret Clamp.
8. Turret seal.

12 WALL MOUNTING TEMPLATE

IMPORTANT.

For direct mounting (piping frame on wall) choose one black circle in each group.

If using the stand-off brackets choose one dotted circle in each group. Care MUST be taken to ensure the correct holes are drilled.

1. Tape the template into the selected position.
2. Ensure squareness by hanging a plumbline as shown.
3. Mark onto the wall the following:
   - **a.** The 4 wall mounting plate screw positions.
   - **b.** The position of the flue duct. Mark the centre of the hole as well as the circumference.
4. Remove the template from the wall.

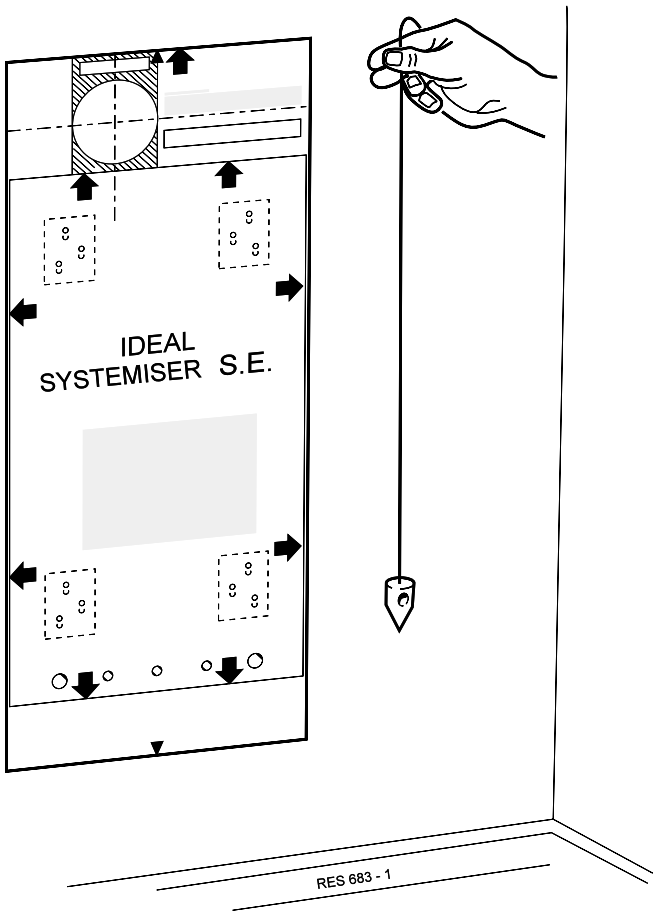

REAR FLUE OUTLET

13 PREPARING THE WALL

WARNING. Ensure that, during the cutting operation, masonry falling outside of the building does not cause damage or personal injury.

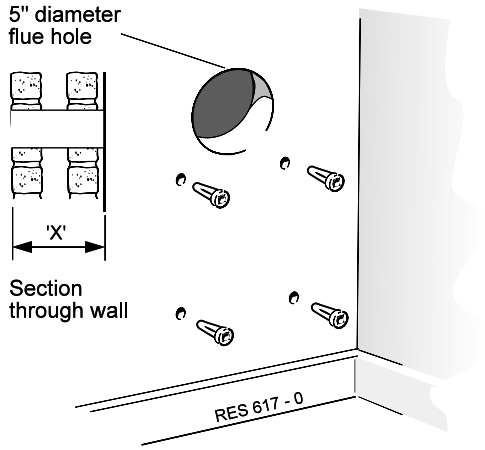

1. Cut the flue hole (preferably with a 5" core boring tool), ensuring that the hole is square to the wall.
   Both wall faces immediately around the cut hole should be flat.
2. Drill 4 holes with a 7mm (1/4") masonry drill and insert the plastic plugs provided, for the wall piping frame.

Note. *If the terminal is to be sited within 25-40mm of a corner or vertical pipe then the hole MUST be accurately cut and the rubber weather seal trimmed around the groove provided.*
The terminal wall plate need not be fitted.

14 FITTING THE PIPING FRAME

Fit the wall mounting frame either:

a. Directly to the wall

- Insert wall plugs.
- Put the screws into the wall plugs and leave 10mm proud
- Hang the frame onto the screws and tighten up.

or

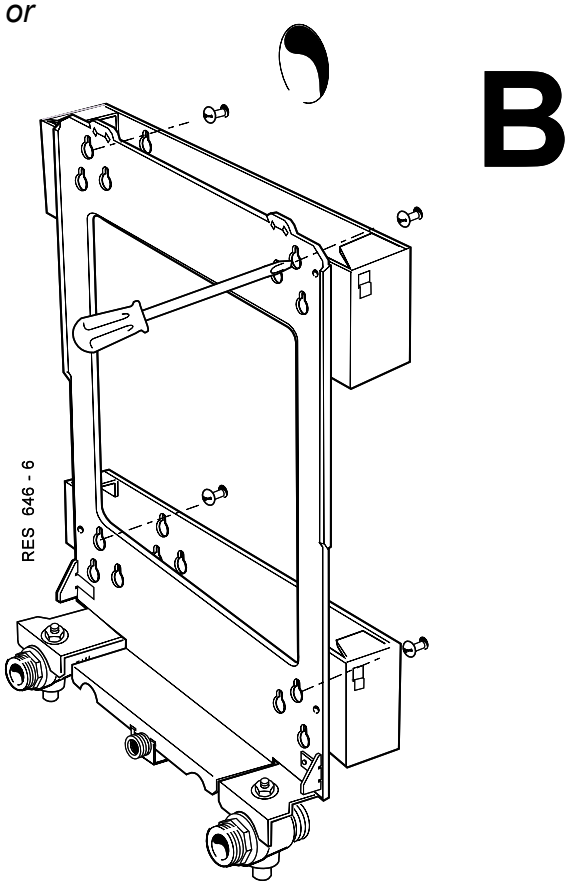

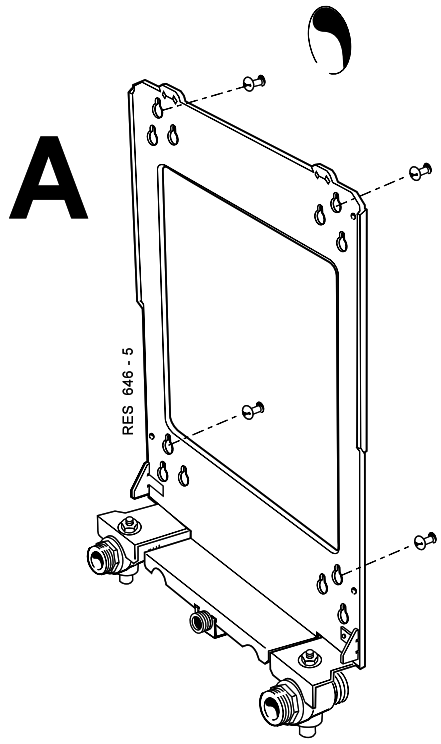

b. Use stand-off brackets
(To allow pipework to be taken upwards).

- Insert wall plugs.
- Put the screws into the wall plugs and leave 10mm proud.
- Fasten each bracket to the frame with the 6mm screws and washers provided.
- Hang the brackets and frame onto the screws and tighten up.

Note. *If the clearances above and below the boiler are less than the length of the pipes it will be necessary to position the pipes behind the wall mounting plate BEFORE the plate is screwed to the wall.*

15 WATER CONNECTIONS

Note.

1. Do not subject any of the isolating valves to heat as the seals may be damaged.
2. In areas where the mains water pressure is known to be high (greater than 10 bar) it is recommended that a water governor is fitted on the cold inlet supply to the boiler.

CH CONNECTIONS

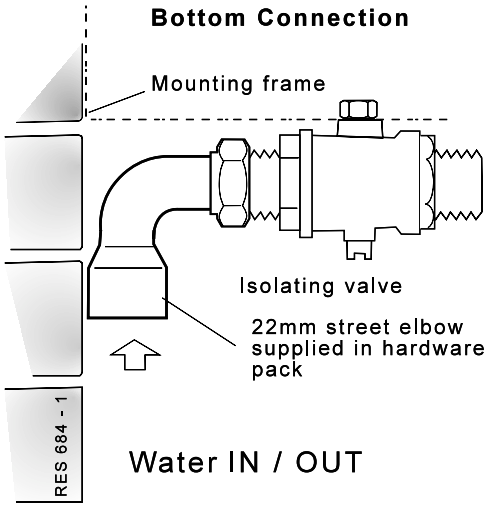

TANK CONNECTIONS

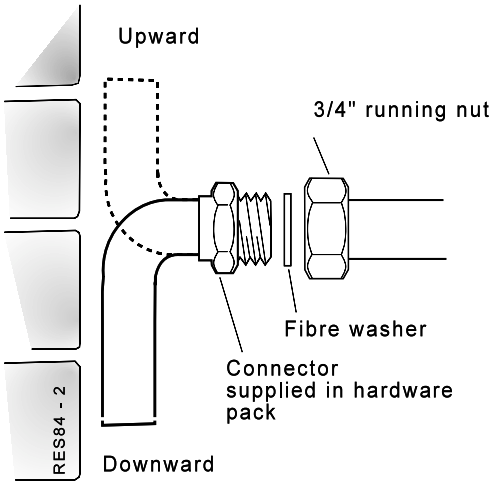

For top connections: Reverse elbow

16 GAS CONNECTION

Bottom and top connections

1. Solder the 1/2" connector, street elbow, straight pipe and reducing coupling together.
2. Remove the gas cock bracket complete with gas cock.
3. Screw the connector into the gas cock in the correct orientation.
4. Screw the complete assembly back onto the mounting frame.

Extend a gas supply pipe of not less than 22mm O.D. copper or 3/4" BSP iron to the boiler.

A working gas pressure of 20mb (8" w.g) must be available at the boiler inlet, with the boiler firing at full rate.

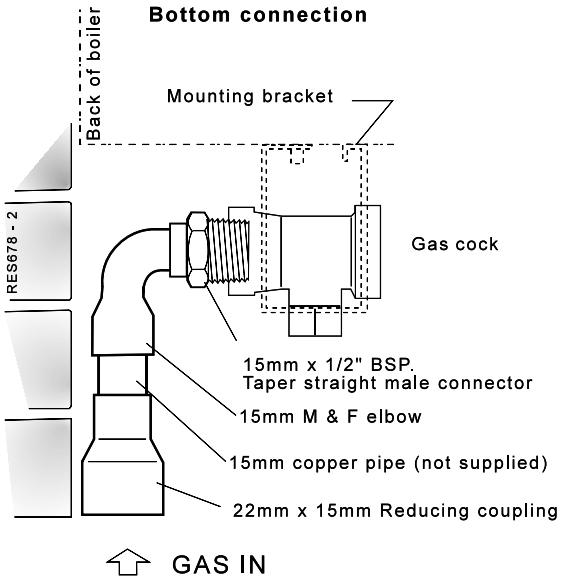

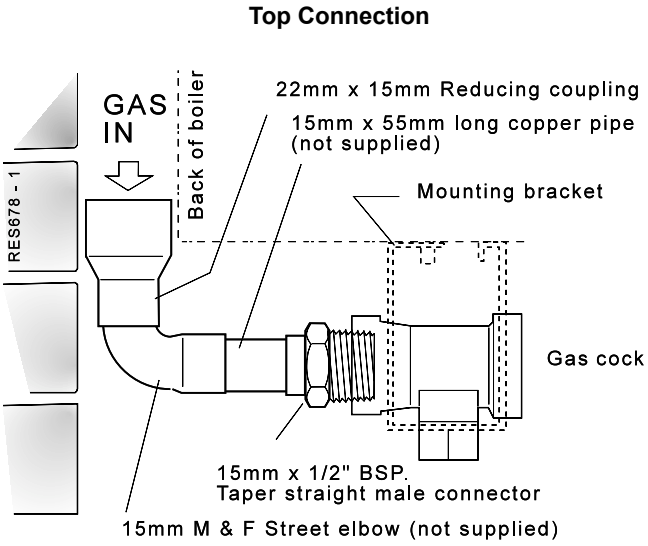

REAR FLUE OUTLET

REAR FLUE OUTLET

17 MOUNTING THE BOILER

1. Remove the boiler casing:
   - **a.** Undo the securing screw.
   - **b.** Disengage the casing from the back panel and lift it from the boiler.

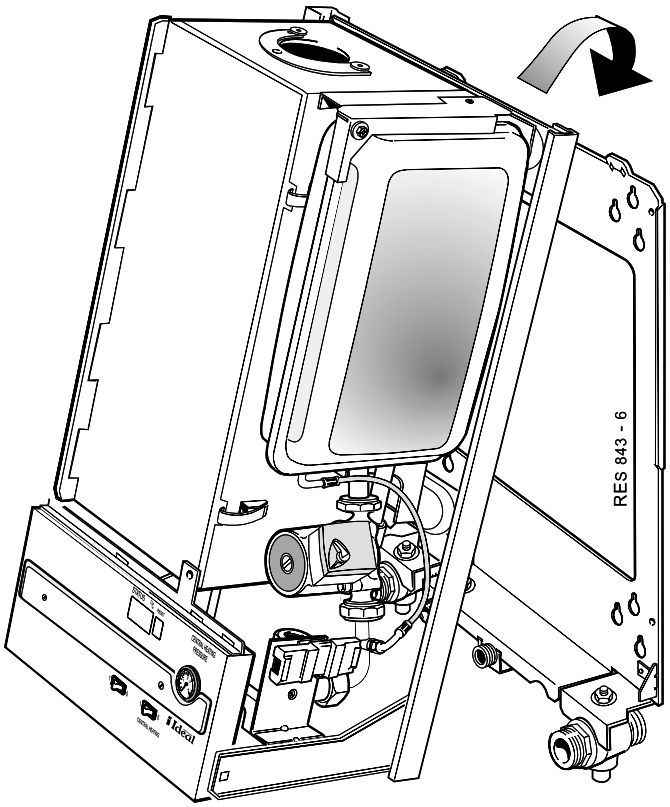

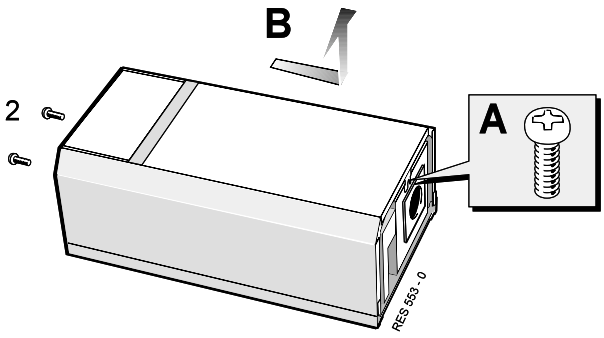

2. Undo the 2 screws and remove the boiler bottom panel.
3. Lift the boiler on to the wall, locating the CH flow and return pipes and gas pipe to the service pipes.

   Tighten all pipe connections.

18 CUTTING THE FLUE **Rear Flue Length of 114 to 580mm**

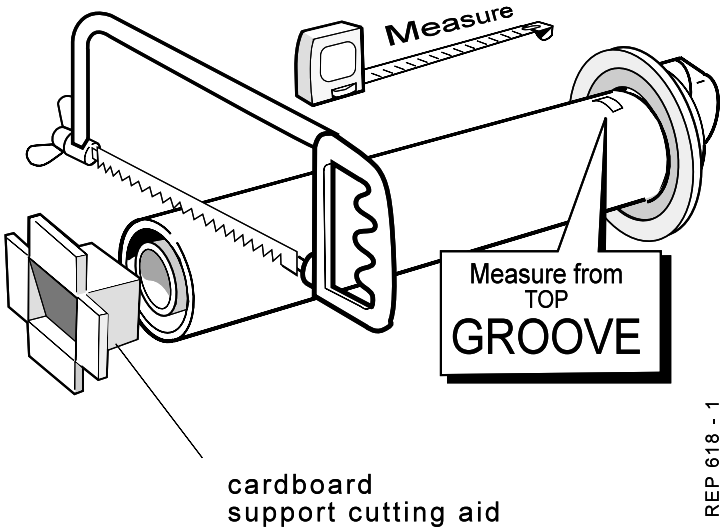

Note.
If the optional standoff bracket kit is used it is essential that 80mm is added to the measured wall thickness when marking the flue (to allow for the thickness of the brackets).

1. Measure and note wall thickness X.
2. Add 40mm (1 5/8") to dimension X and, measuring from the groove, cut the tube.

   IMPORTANT

   Measure from the groove marked 'TOP' ***not*** the larger groove.
3. To ensure the tube is cut square, mark the flue all the way round.
4. Cut to length, using the cardboard support aid.
5. Remove the cardboard support and any burrs.

19 ASSEMBLING THE FLUE

1. Fit the 'cut to length' flue on to the flue turret.
   Note. *Ensure the top groove in the flue aligns with the top of the turret.*
2. Drill a 3.2mm dia. hole through the flue via the hole present in the turret.
3. Secure the turret to the flue, using the self tapping screw provided.

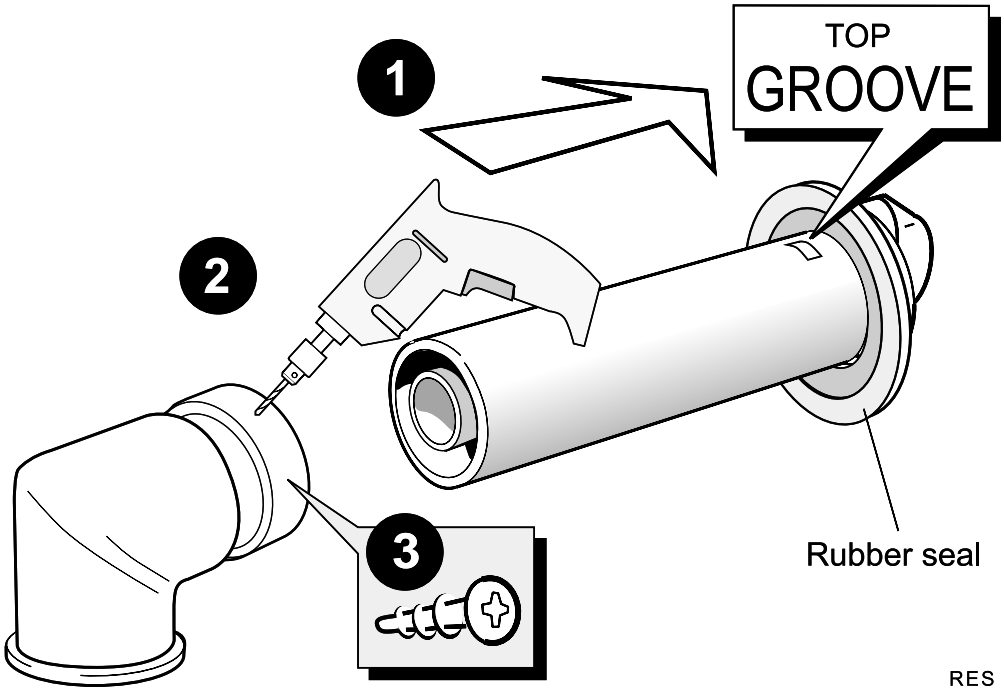

20 CONNECTING THE FLUE TO THE BOILER

Note.

BEFORE fitting the flue turret, fill the condensate trap within the boiler by pouring a cupful of water into the flue outlet A.

1. Insert the flue assembly through the prepared hole in the wall far enough to allow the rubber seal to unfold completely and form an adequate seal on the outside wall.
2. Pull the flue back and locate the flue turret on the top of the boiler ensuring that the seal is in place.
3. Secure the flue turret on top of the boiler by inserting the open ends of the turret clamp under the 2 studs and fixing it in the middle with the single M5 x 10mm pozi-hex screw provided.
4. Now make good the inside wall face around the flue.

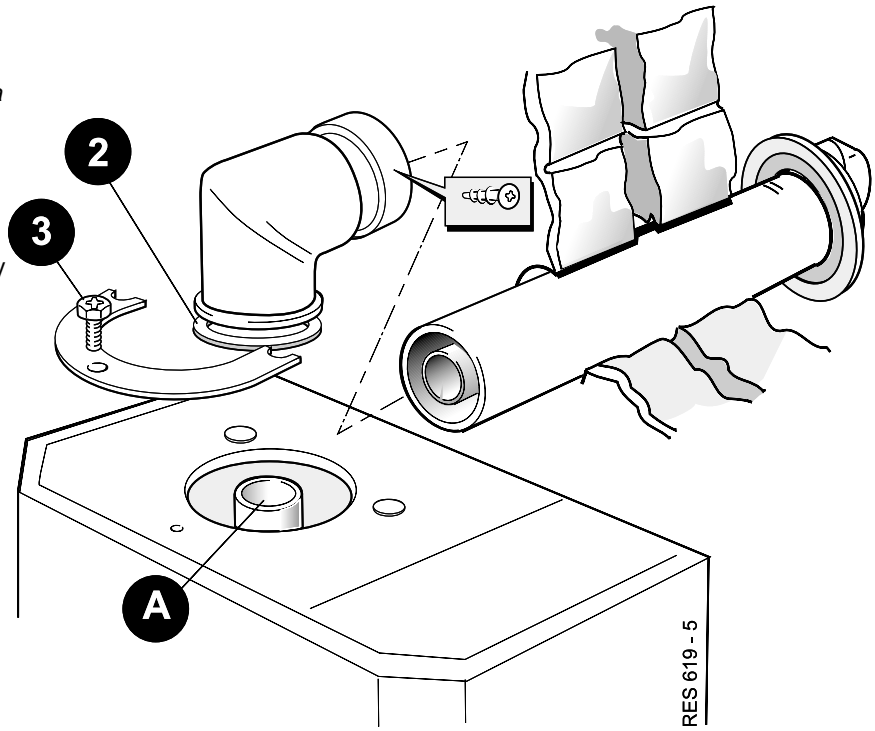

PROCEED TO FRAME 32

REAR FLUE OUTLET

21 SIDE FLUE ASSEMBLY - Exploded view

1. An optional flue duct extension kit is required for flue lengths greater than:

410 mm (16") for RHS flue

540 mm (21 1/4") for LHS flue (Refer to Frame 11).

2. When cutting the ducts always use the cardboard support cutting aid provided.

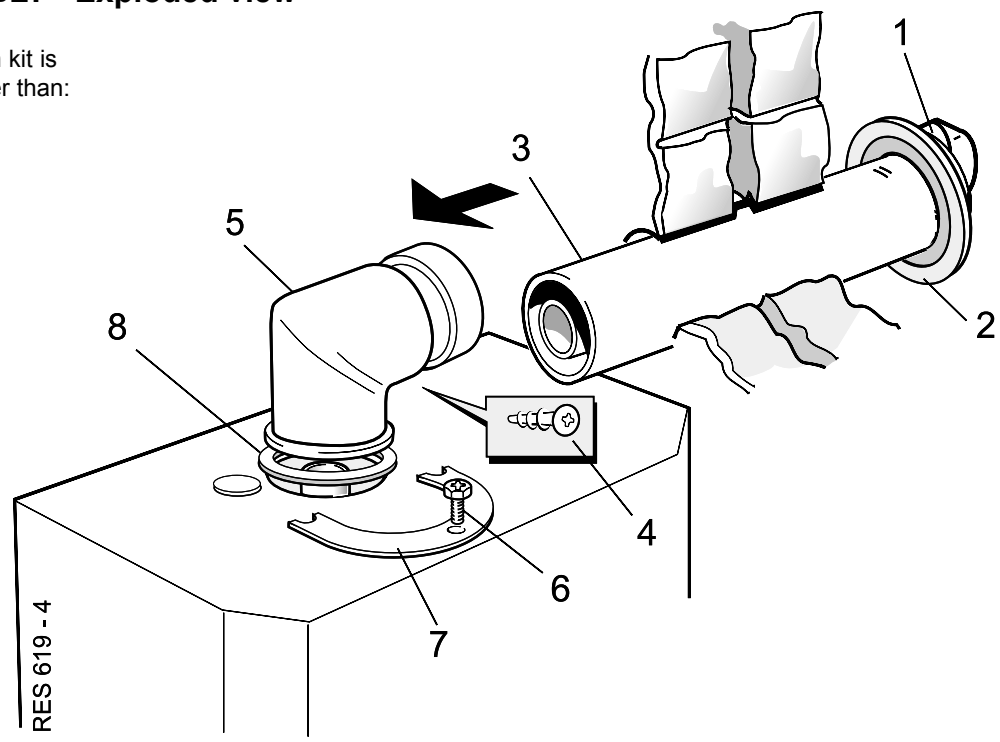

LEGEND

1. Terminal.
2. Weather seal.
3. Duct assembly.
4. No. 8 x 8 self-tapping screw.
5. Flue Turret.
6. M5 x 10 pozi screw.
7. Turret clamp.
8. Turret seal.

22 WALL MOUNTING TEMPLATE

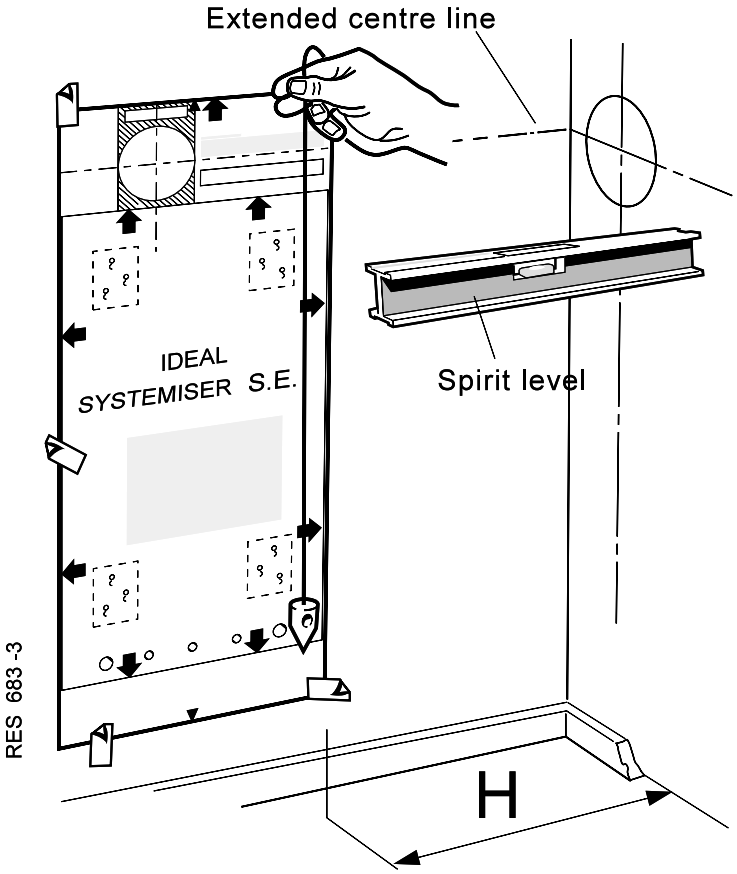

IMPORTANT.

For direct mounting (piping frame on wall) choose one black circle in each group.

If using the stand-off brackets choose one dotted circle in each group. Care MUST be taken to ensure the correct holes are drilled.

1. Tape the template into the selected position.

2. Ensure squareness by hanging a plumbline as shown.

3. Mark onto the wall the following:

a. The 4 wall mounting plate screw positions.

b. The position of the flue duct. Mark the centre of the hole as well as the circumference.
Note. *Allow for stand-off brackets if being used. Use the table on the walling mounting template.*

4. Remove the template from the wall.

23 PREPARING THE WALL

WARNING.

Ensure that, during the cutting operation, masonry falling outside of the building does not cause damage or personal injury.

1. Cut the flue hole (preferably with a 5" core boring tool), ensuring that the hole is square to the wall. Both wall faces immediately around the cut hole should be flat.
2. Drill 4 holes with a 7mm (1/4") masonry drill and insert the plastic plugs, provided, for the wall mounting piping frame.

   Note. *If the terminal is to be sited within 25-40mm of a corner or vertical pipe then the hole MUST be accurately cut and the rubber weather seal trimmed around the groove provided. The terminal wall plate need not be fitted.*

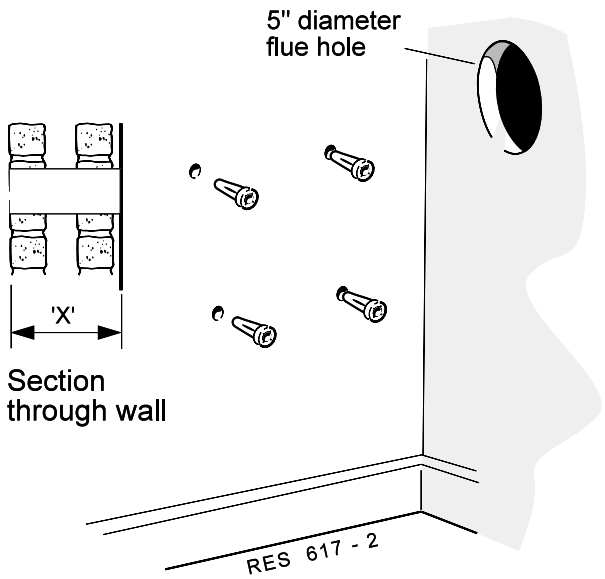

24 FITTING THE PIPING FRAME

Fit the wall mounting frame either:

a. Directly to the wall

- Insert wall plugs.
- Put the screws into the wall plugs and leave 10mm proud
- Hang the frame onto the screws and tighten up.

or

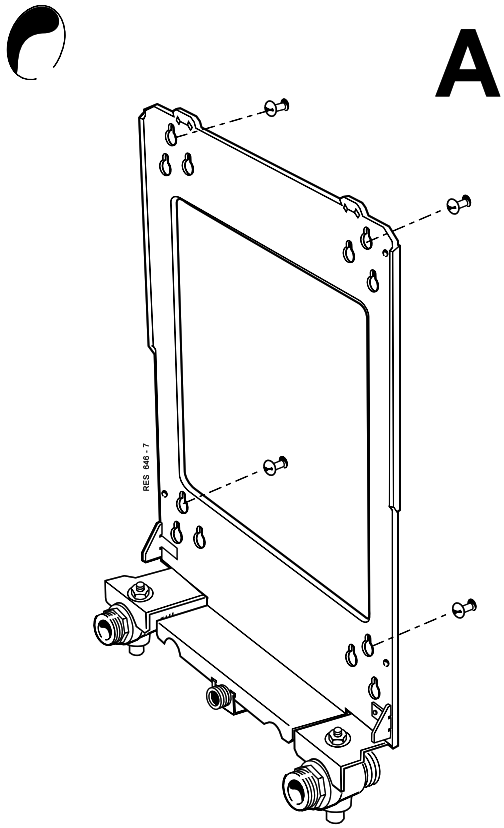

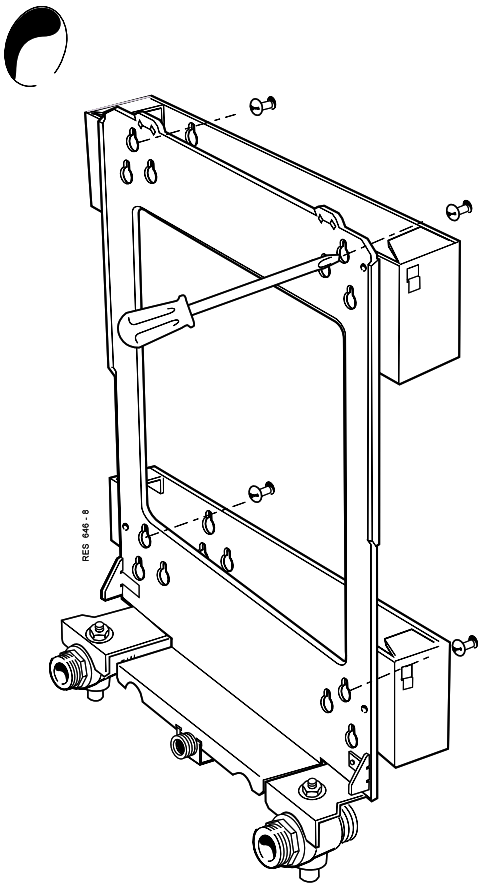

b. Use stand-off brackets
(To allow pipework to be taken upwards).

- Insert wall plugs.
- Put the screws into the wall plugs and leave 10mm proud.
- Fasten each bracket to the frame with the 6mm screws provided.
- Hang the brackets and frame onto the screws and tighten up.

Note. *If the clearances above and below the boiler are less than the length of the pipes it will be necessary to position the pipes behind the wall mounting plate BEFORE the plate is screwed to the wall.*

25 WATER CONNECTIONS

Notes.

1. *Do not subject any of the isolating valves to heat as the seals may be damaged.*
2. *In areas where the mains water pressure is known to be high (greater than 10 bar) it is recommended that a water governor is fitted on the cold inlet supply to the boiler.*

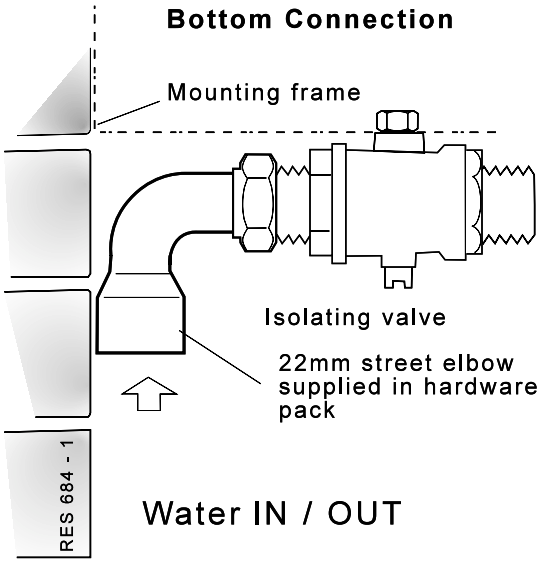

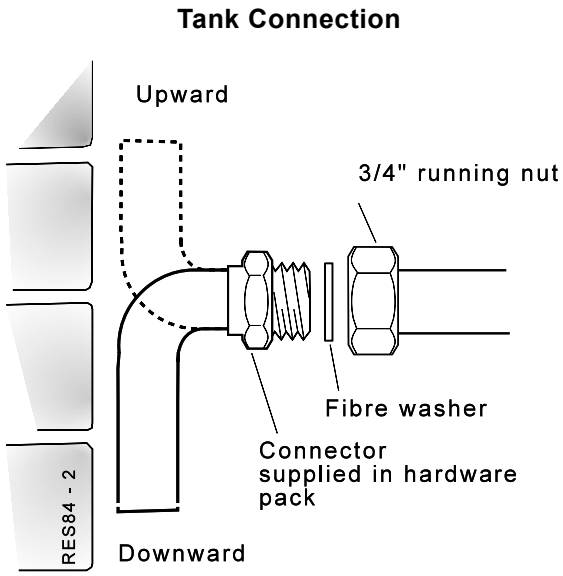

For top connections: Reverse elbow .

26 GAS CONNECTION

Bottom and top connections

1. Solder the 1/2" connector, street elbow, straight pipe and reducing coupling together.
2. Remove the gas cock bracket complete with gas cock.
3. Screw the connector into the gas cock in the correct orientation.
4. Screw the complete assembly back onto the mounting frame.

Extend a gas supply pipe of not less than 22mm O.D. copper or 3/4" BSP iron to the boiler.

A working gas pressure of 20mb (8" w.g) must be available at the boiler inlet, with the boiler firing at full rate.

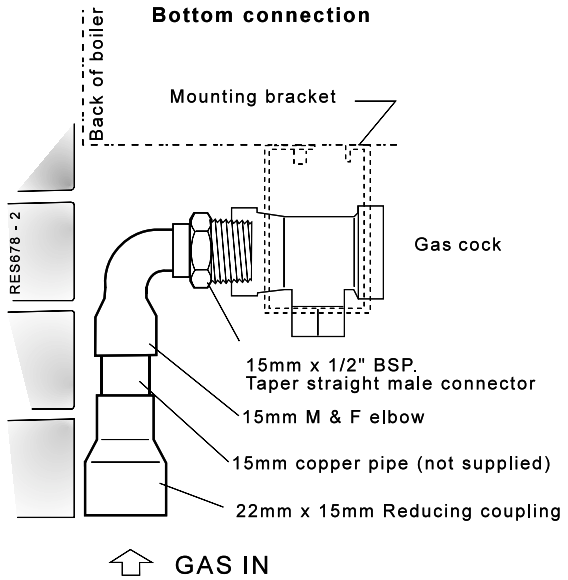

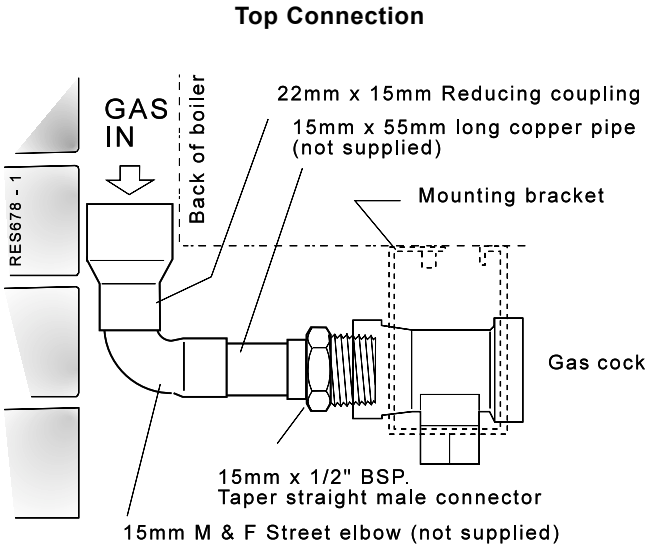

27 MOUNTING THE BOILER

Lift the boiler onto the wall mounting piping frame, as shown.

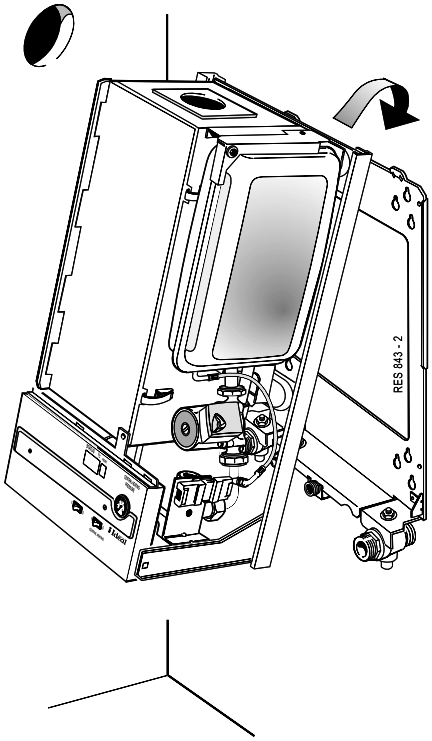

28 CUTTING THE FLUE - For flue lengths 114 to 600mm *ONLY*

1. The flue cut length is calculated as follows:

a. Measure and note the wall thickness X

b. Add dimension H, measured in Frame 22.

c. For right hand side flue add 188mm (7 3/8")

d. For left hand side flue add 61mm (2 3/8")

i.e. X + H + 188mm (7 3/8") for RHS
X + H + 61mm (2 3/8") for LHS

2. Measure from the groove and cut the tube.
IMPORTANT.
Measure from the groove marked 'TOP' ***not*** the larger groove.)

3. To ensure the tube is cut square, mark the flue all the way round.

4. Cut to length, using the cardboard support aid.

5. Remove the cardboard support and remove any burrs.

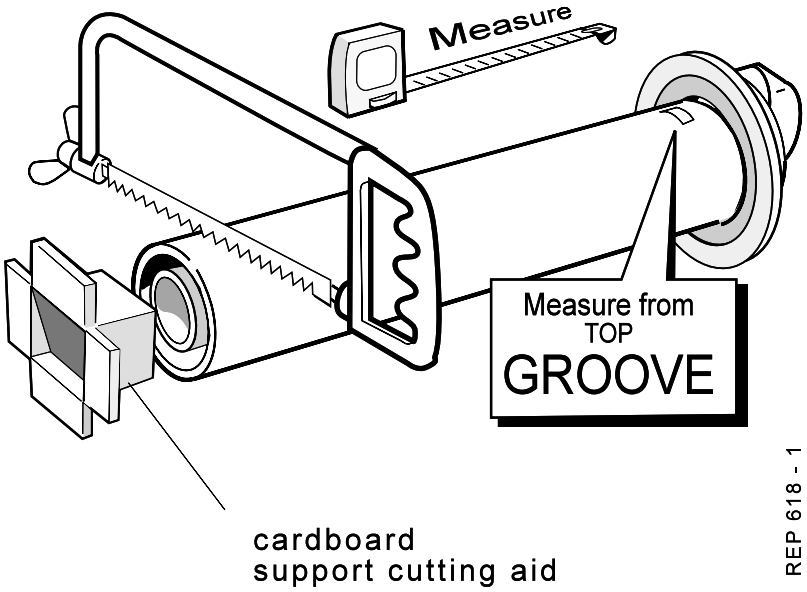

FOR FLUE LENGTHS GREATER THAN 600mm REFER TO FRAMES 34, 35 & 36 - FLUE EXTENSION DUCTS

29 ASSEMBLING THE FLUE

1. Fit the 'cut to length' flue on to the flue turret.
   Note.
   Ensure the groove in the flue aligns with the top of the turret.

2. Drill a 3.2mm dia. hole through the flue via the hole present in the turret.

3. Secure the turret to the flue, using the self tapping screw provided.

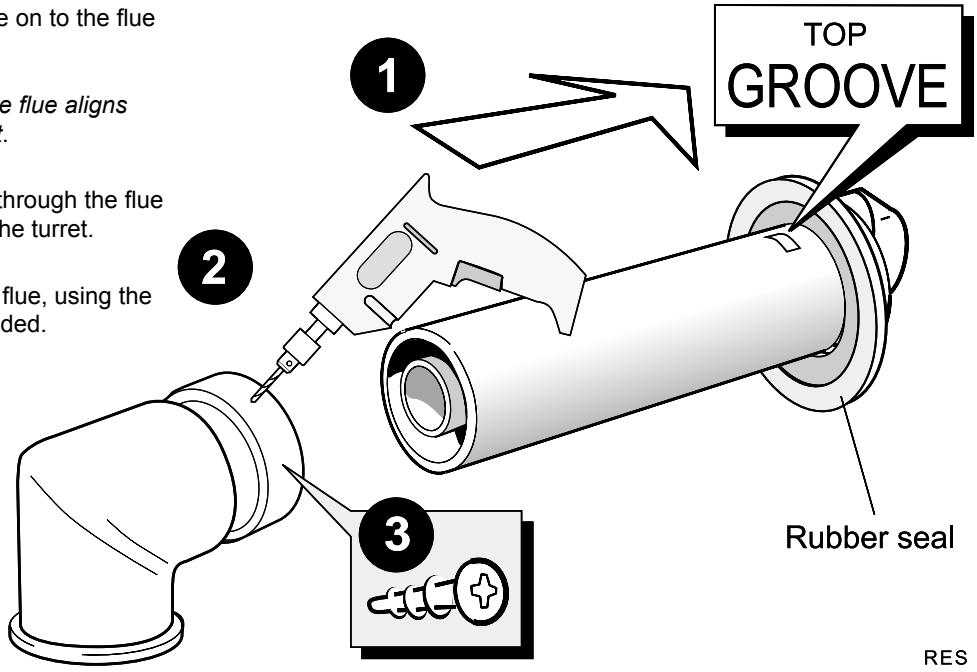

30 CONNECTING THE FLUE TO THE BOILER

Note. *BEFORE fitting the flue turret, fill the condensate trap within the boiler by pouring a cupful of water into the flue outlet A.*

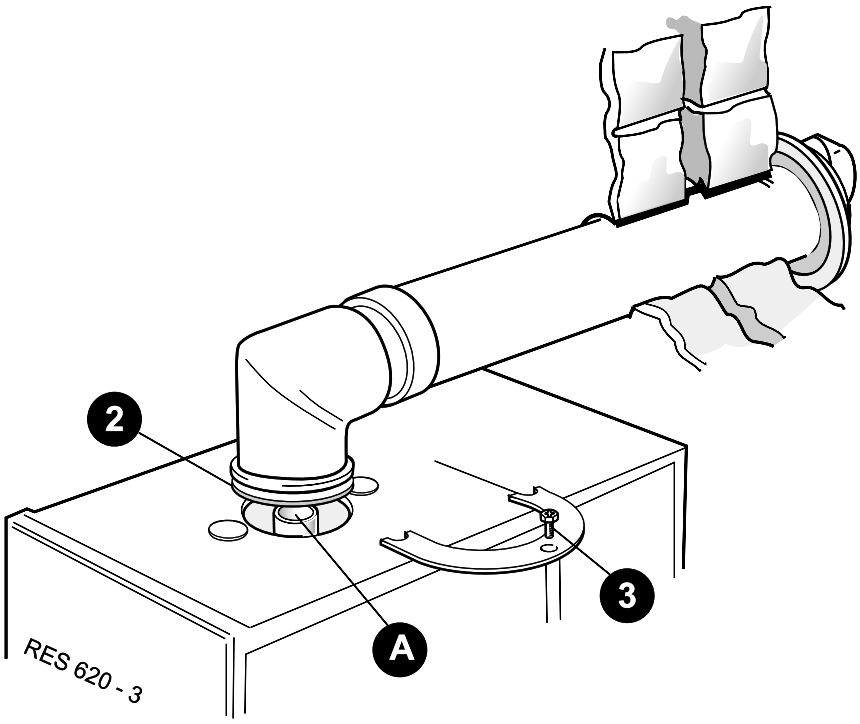

1. Insert the flue assembly through the prepared hole in the wall far enough to allow the rubber seal to unfold completely and form an adequate seal on the outside wall.

2. Pull the flue back and locate the flue turret on the top of the boiler ensuring that the seal is in place.

3. Secure the flue turret on top of the boiler by inserting the open ends of the turret clamp under the 2 studs and fixing it in the middle with the single M5 x 10mm pozi-hex screw provided.

4. Flues over 1 metre long.
   Fix the flue support bracket to the wall, using the wall plug and wood screw.
   For standard installations use the short wood screw.
   If the stand-off option is used, secure the support bracket using the spacer bracket and long wood screw.

5. Now make good the inside wall face around the flue.

31 TERMINAL WALL PLATE

This plate allows neat concealment and full compression of the rubber seal. Its use is not essential if the flue hole and flue ducts have been accurately cut and the outside wall face is flat.

1. Position the terminal wall plate over the terminal.
2. Drill 4 fixing holes with a 7mm (1/4") masonry drill.
3. Insert the 4 plastic plugs provided.
4. Secure the plate with 4 of the No.10 x 2" screws provided.

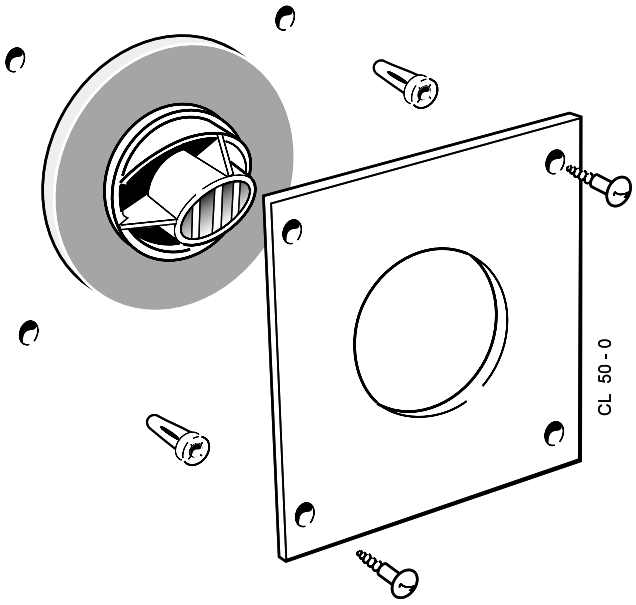

32 CONDENSATE DRAIN

The condensate drain provided on the boiler must be connected to a drainage point, preferably within the building.

The routing of the drain must be made to allow a minimum fall of 1 in 20 away from the boiler, throughout its length.

The drainage pipework must be arranged so that obstruction (e.g. through freezing) of external drainage pipe does not give rise to spillage within the dwelling.

Excessive external pipe runs should be avoided in order to prevent possible freezing.

All pipework and fittings in the condensate drain system must be made of plastic. No other materials may be used.

The drain outlet on the boiler is standard 22mm overflow pipe. This size must not be reduced in any part of its length.

In order to defer the onset of freezing of the condensate drain when the pipe is run externally the pipe should be run as far as possible within the building.

The boiler condensate drain connection is suitable for Bartol 'Polypipe' tubing. An adaptor is supplied to allow the use of Marley 'Terrain' tubing, which is slightly larger. This adaptor should be sealed to the Marley 'Terrain' tubing and to the boiler condensate drain, using a suitable plastic tube adhesive.

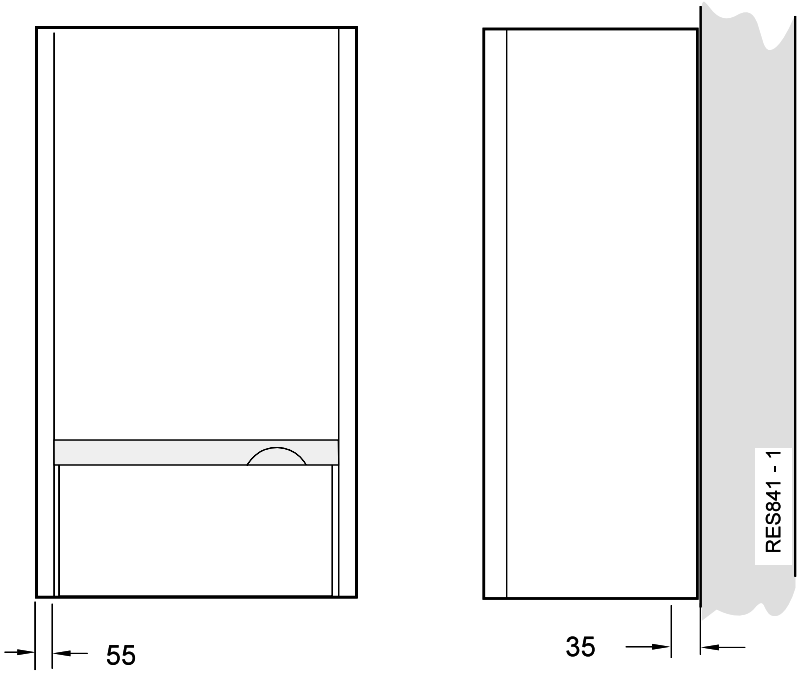

33 SAFETY VALVE DRAIN

The safety valve is located at the bottom LHS of the boiler.

1. Using the pressure relief valve outlet pipe, nut and olive from the hardware pack, assemble into safety valve as shown.

2. If access to the nut is difficult remove the socket screw from inside of fitting and pull the valve from the pipe to allow the piping nut to be tightened.

3. Replace valve and tighten socket screw.

The position of the safety valve discharge pipe should be such that any discharge of water or steam does not create a hazard.

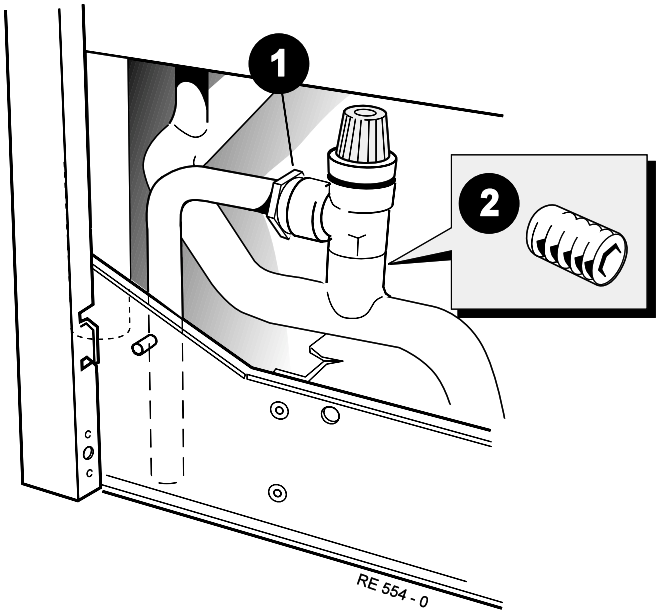

34 FLUE EXTENSION DUCTS - For overall flue lengths greater than 600mm (23 5/8")

Pack D Flue Extension Duct Kit contents

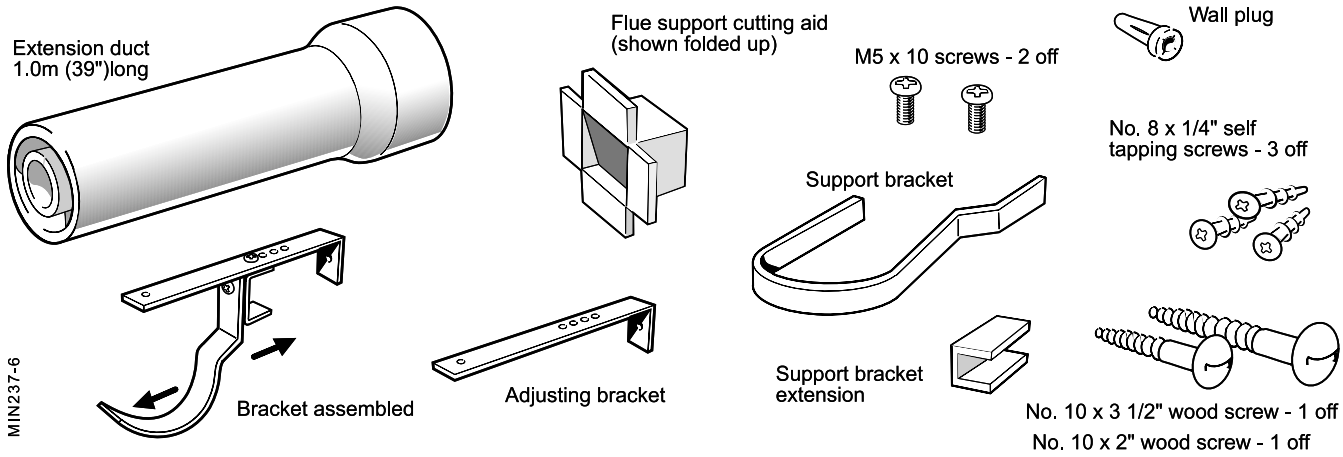

35 FLUE EXTENSION DUCTS - continued

Use a maximum of 3m extended flue ONLY

GENERAL ARRANGEMENT

1. A ***maximum*** of 3 extension ducts (one suitably cut) plus the standard flue duct may be used together.

2. Flue extensions of greater length than 1m (39") should be supported with the bracket provided, suitably adjusted - refer to Frame 34.

Note. *Side flue shown*

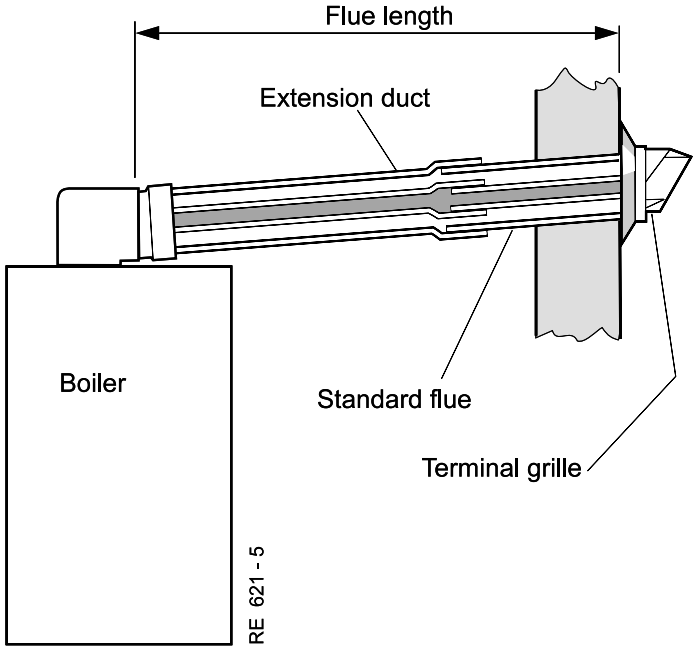

36 FITTING THE KIT

1. Remove the cardboard support aid from the flue and place safely to one side.
2. Fit the inner flue extension duct onto the inner flue duct.
3. Fit the outer flue extension duct onto the outer air duct.
4. Drill one 3.2mm (1/8") dia hole through the outer air duct.
   Do not drill the inner flue duct.
5. Insert the self tapping screw provided to fix the air duct in position.
6. Repeat steps 1-5 if a second flue extension is required.
7. Measure and mark the flue length required onto the flue, measuring from the groove near the terminal.
8. To ensure a square cut, mark the flue all the way round.
9. Cut to length using the cardboard support aid.
10. Remove the cardboard offcuts and deburr the metal edges.

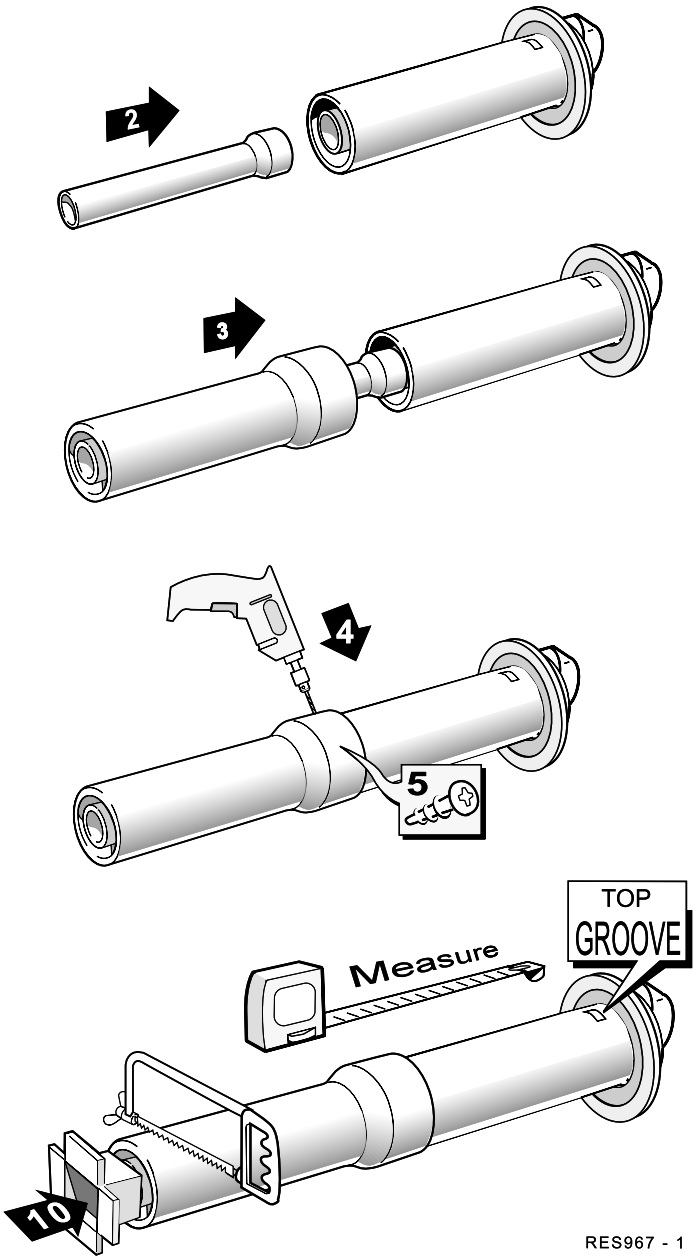

Appliances fitted with a ***REAR* outlet flue**; please refer to Frame 11

Appliances fitted with a ***SIDE* outlet flue**; please refer to Frame 21

37 FILLING - Central Heating

Refer also to Frame 5

1. Ensure that the CH isolating valves are open.
2. Release the securing screw and swing the control panel down.
3. Fill and vent the system. Check for water soundness

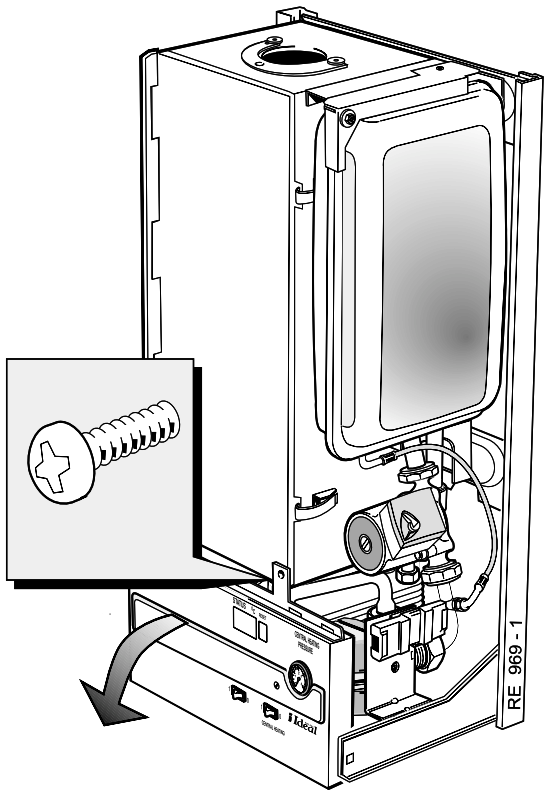

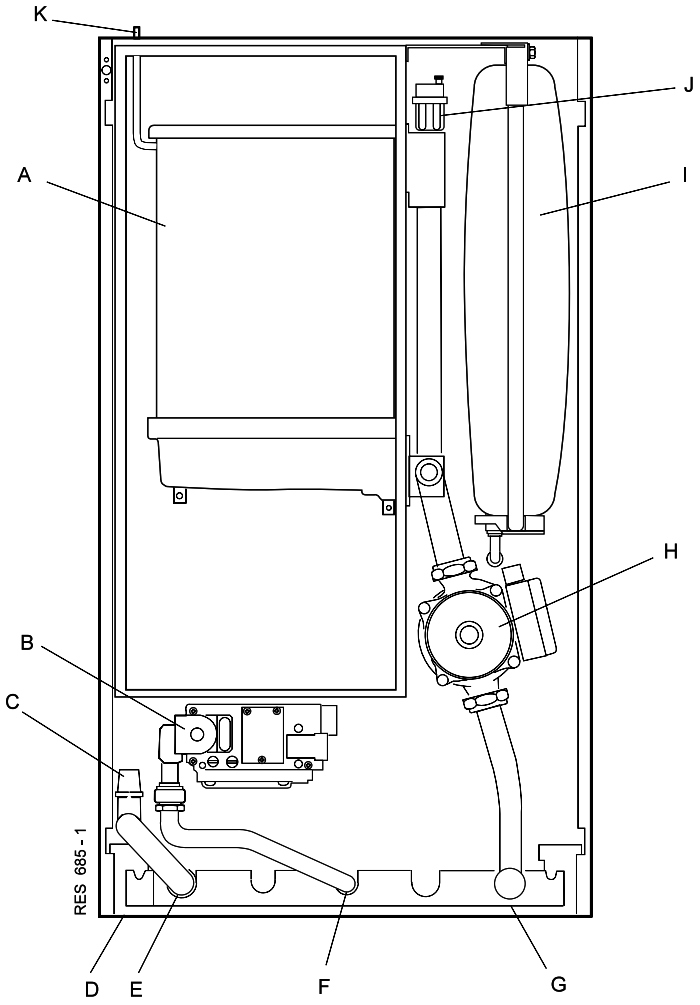

Legend

A	Boiler heat exchanger
B	Gas valve
C	Safety valve
D	Condensate & safety drains
E	CH flow
F	Gas inlet
G	CH return
H	Pump
I	CH expansion vessel
J	Automatic air vent
K	Flue sensing point

Front elevation layout of boiler components (control panel open)

38 FILLING - continued

IMPORTANT - WHEN FILLING:

The cap on the automatic air vent MUST be loose at all times.

When filling, there may be a slight water leak from the vent therefore electrical connections should be protected.

- **i.** Remove the vent plug
- **ii.** Using a screwdriver, rotate the shaft several times
- **iii.** Replace the vent plug.

Note. *Some slight water leakage will occur.*

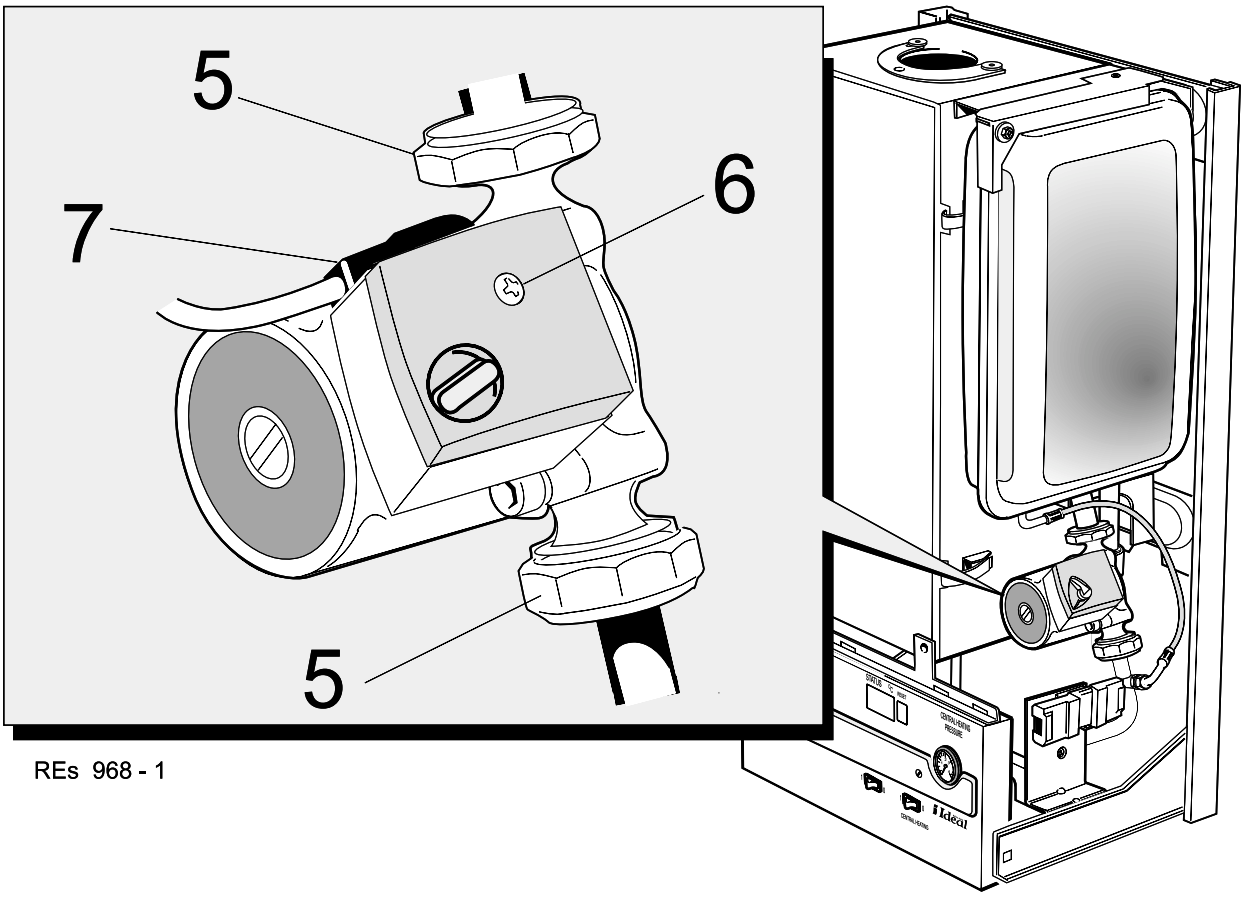

REs 968 - 1

39 ELECTRICAL CONNECTIONS

WARNING. This appliance must be efficiently earthed.

A mains supply of 230 V ~ 50 Hz is required.

The fuse rating should be 3A.

Wiring external to the boiler MUST be in accordance with the current I.E.E. (BS.7671) Wiring Regulations and any local regulations.

All external controls and wiring must be suitable for mains voltage.

Wiring should be 3 core PVC insulated cable, not less than 0.75 mm^2 (24 x 0.2mm).

Wiring external to the boiler MUST be in accordance with the current wiring regulations and any local regulations.

Connection must be made in a way that allows complete isolation of the electrical supply such as a double pole switch having a 3mm (1/8") contact separation in both poles, or a plug and socket, serving only the boiler and system controls. The means of isolation must be accessible to the user after installation.

40 INTERNAL WIRING

1. Route the mains cable into the bottom rear RHS of the boiler.
2. Wire the live, neutral and earth into the 5-way remote plug terminals, 3 (Live) N & ⏚ as shown.

Note.

Ensure that the lengths of the current carrying conductors are shorter than the earth conductor so that if the cable slips in its anchorage the current carrying conductors become taut before the earth conductor.

3. If a room thermostat is fitted wire across the 5-way remote plug terminals 1 & 2 in place of link wire.
4. Secure the mains lead with the cable clamp in the plug.

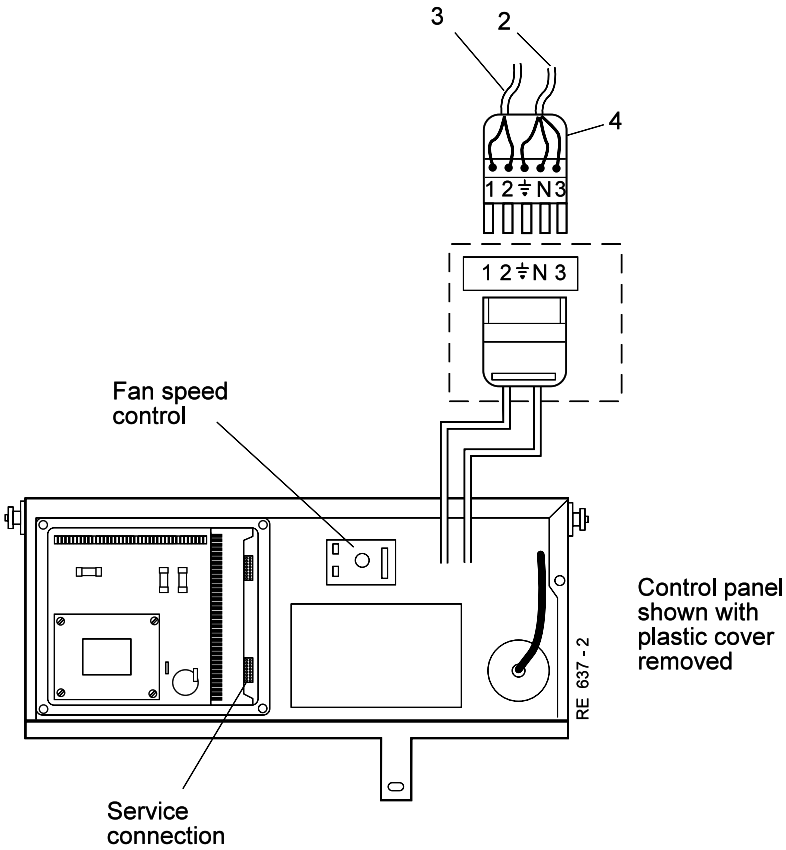

Note.

1 2 - Room thermostat connections

41 FLOW WIRING DIAGRAM

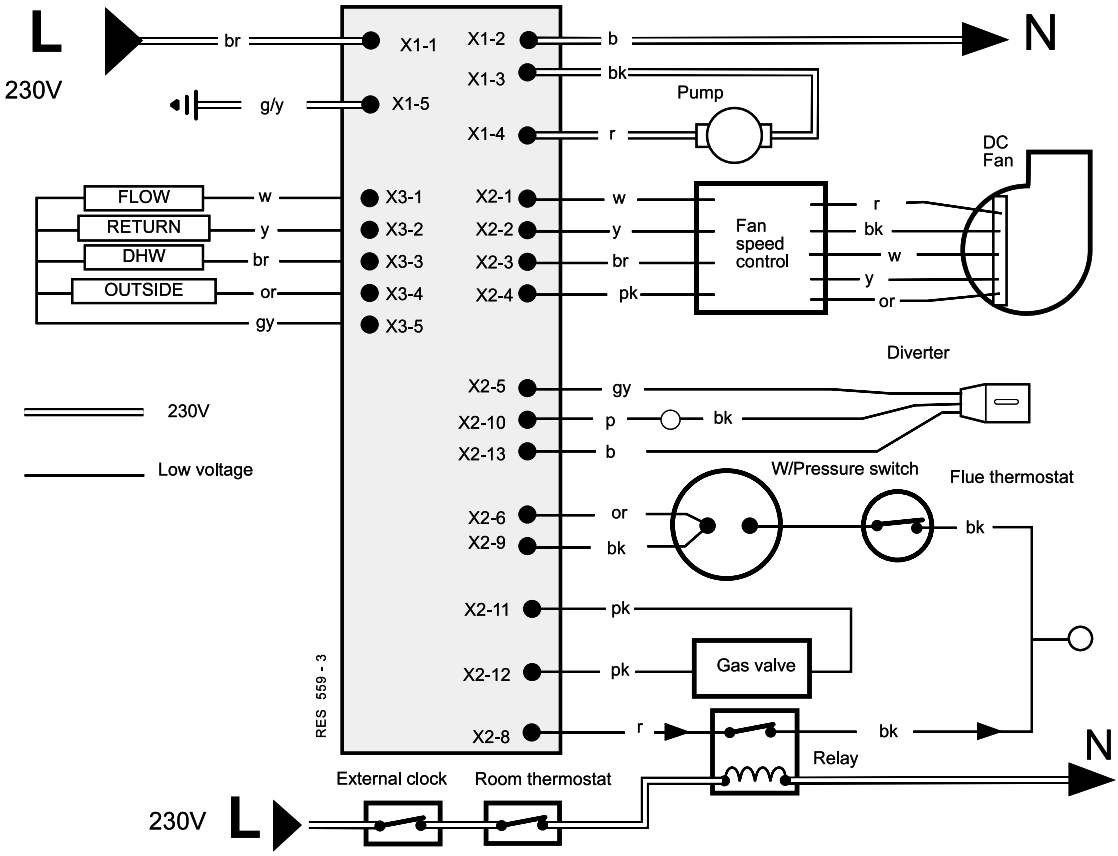

42 PICTORIAL WIRING DIAGRAM

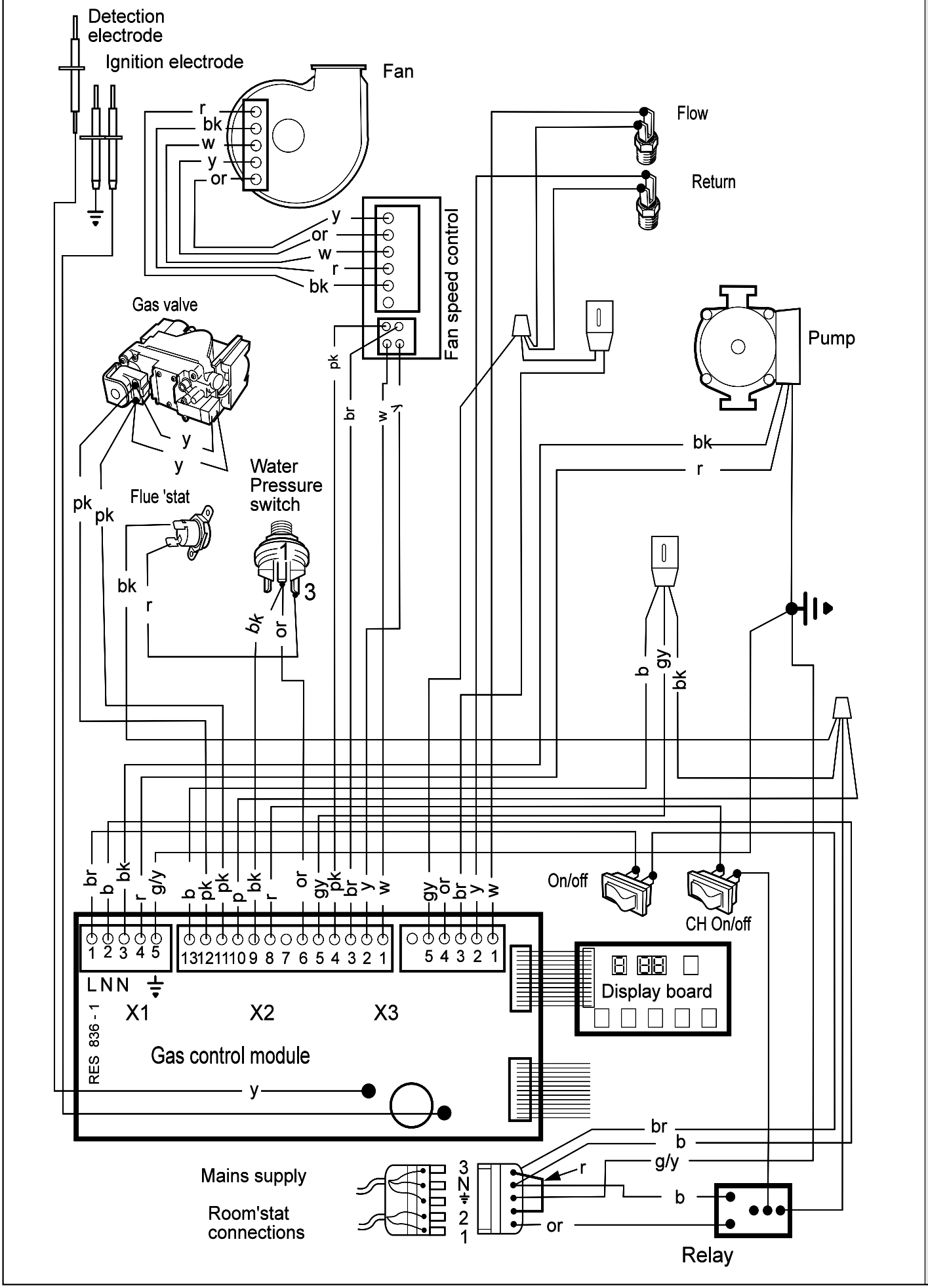

43 MID POSITION VALVE Pumped only

Notes.

1. *Some earth wires are omitted for clarity. Ensure proper earth continuity when wiring.*
2. *Numbering of terminals on thermostats is specific to the manufacturer.*
3. *This is fully controlled system - set the boiler thermostat to maximum.*
4. *Switchmaster valve has grey & orange auxiliary switch leads but the grey wire must be connected to the live supply.*

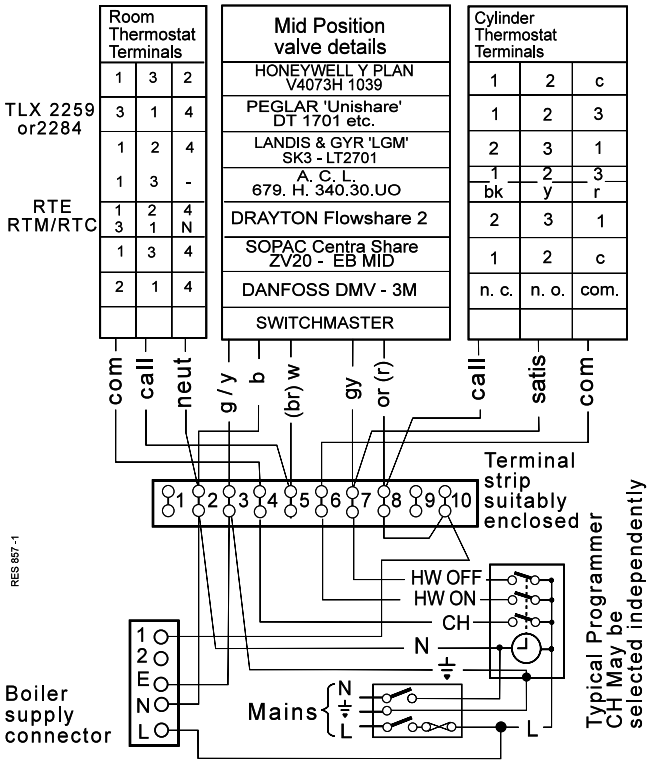

LEGEND

b	blue	**y**	yellow
bk	black	**w**	white
br	brown	**g/y**	green/yellow
r	red	**or**	orange
		v	violet

44 TWO SPRING CLOSED VALVE

Pumped only

Notes.

1. *Some earth wires are omitted for clarity. Ensure proper earth continuity when wiring.*
2. *Numbering of terminals on thermostats is specific to the manufacturer.*
3. *This is fully controlled system - set the boiler thermostat to maximum.*
4. *Switchmaster 'Midi' is similar in operation, but the wiring differs slightly; see manufacturer's literature.*

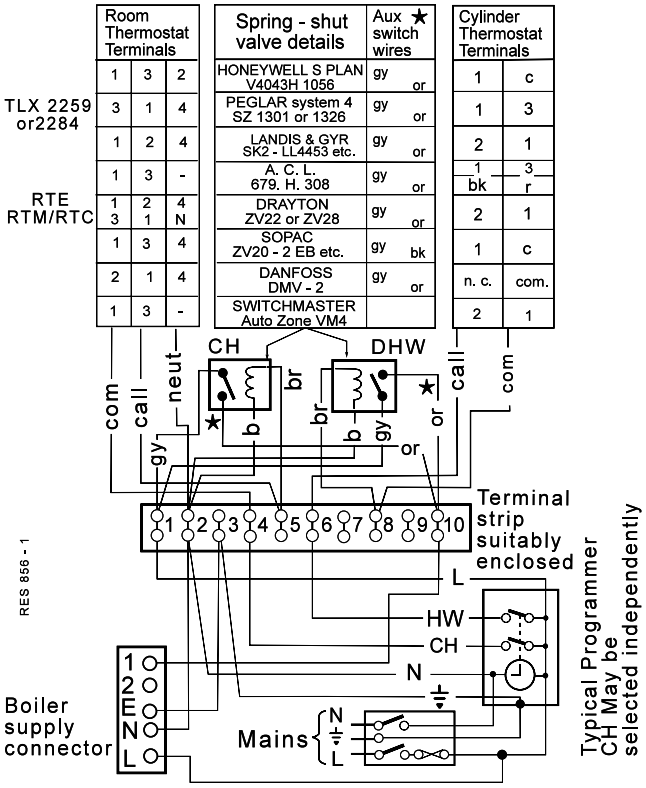

LEGEND

b	blue	**w**	white
bk	black	**g/y**	green/yellow
br	brown	**or**	orange
r	red	**v**	violet
y	yellow	**pk**	pink

45 EXTERNAL WIRING

WARNING. This appliance must be efficiently earthed.

A mains supply of 230 V ~ 50 Hz is required.

The fuse rating should be 3A.

Wiring external to the boiler MUST be in accordance with the current I.E.E. (BS.7671) Wiring Regulations and any local regulations.

All external controls and wiring must be suitable for mains voltage.

Wiring should be 3 core PVC insulated cable, not less than 0.75 mm^2 (24 x 0.2mm).

Connection must be made in a way that allows complete isolation of the electrical supply such as a double pole switch having a 3mm (1/8") contact separation in both poles, or a plug and socket, serving only the boiler and system controls. The means of isolation must be accessible to the user after installation.

The wiring diagrams illustrated in Frames 44-45 cover the systems most likely to be fitted to this appliance.

For wiring external controls to the **Systemiser SE** boiler, reference should be made to the system wiring diagrams supplied by the relevant manufacturer, in conjunction with the wiring diagrams shown.

Difficulty in wiring should not arise, providing the following directions are observed:

1. Controls that switch the system on or off, e.g. a time switch must be wired, in series, to connection 1 in the 5-way plug.
2. Controls that override an on/off control e.g. frost thermostat, must be wired to connection 1 in the 5-way plug, in parallel, with the control(s) to be overridden.
3. If a proprietary system is used, follow the instructions supplied by the manufacturer.

Advice on required modifications to the wiring may be obtained from the component manufacturers.

46 FROST PROTECTION

This is provided automatically by the Gasmodul control.

If the boiler flow temperature T_1 falls below 7 °C the pump runs without the boiler firing until the temperature exceeds 10 °C

If the flow temperature falls below 3 °C the boiler will fire until the temperature exceeds 10 °C.

Central heating systems fitted wholly inside the house do not normally require frost protection as the house acts as a 'storage heater' and can normally be left at least 24 hours without frost damage. However, if parts of the pipework run outside the house or if the boiler will be left off for more than a day or so, then a frost thermostat should be wired into the system.

This is usually done at the programmer, in which case the programme selector switches are set to 'off' - all other controls MUST be left in the running position. The frost thermostat should be sited in a cold place but where it can sense heat from the system. Wiring should be as shown, with minimal disturbance to other wiring of the programmer. Designation of the terminals will vary, but the programmer and thermostat manufacturers leaflets will give full details.

Diagram A shows a double pole frost thermostat, which should suffice for all systems which do not use the OFF terminals of the programmer.

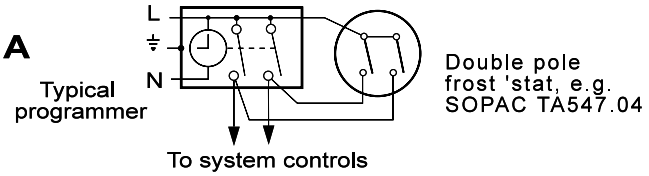

Diagram B shows a 'change-over' frost thermostat, which will cover most systems which do use CH OFF. If, however, on such a system the HW pipework is in an isolated part of the house, a second frost thermostat may be used to protect it. If in doubt, ask your installer for advice.

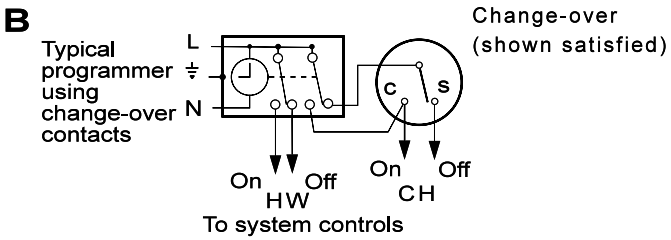

47 COMMISSIONING AND TESTING

A. Electrical Installation

1. Checks to ensure electrical safety should be carried out by a competent person.
2. ALWAYS carry out the preliminary electrical system checks, i.e. earth continuity, polarity, resistance to earth and short circuit, using a suitable test meter.

B. Gas Installation

1. The whole of the gas installation, including the meter, should be inspected and tested for soundness, and purged.
2. Purge air from the gas installation by loosening the gas cock union and purge until gas is smelled.
3. Retighten the union and test for gas soundness.

WARNING. **Whilst effecting the required gas soundness test and purging air from the gas installation, open all windows and doors, extinguish naked lights and *DO NOT SMOKE.***

48 INITIAL LIGHTING

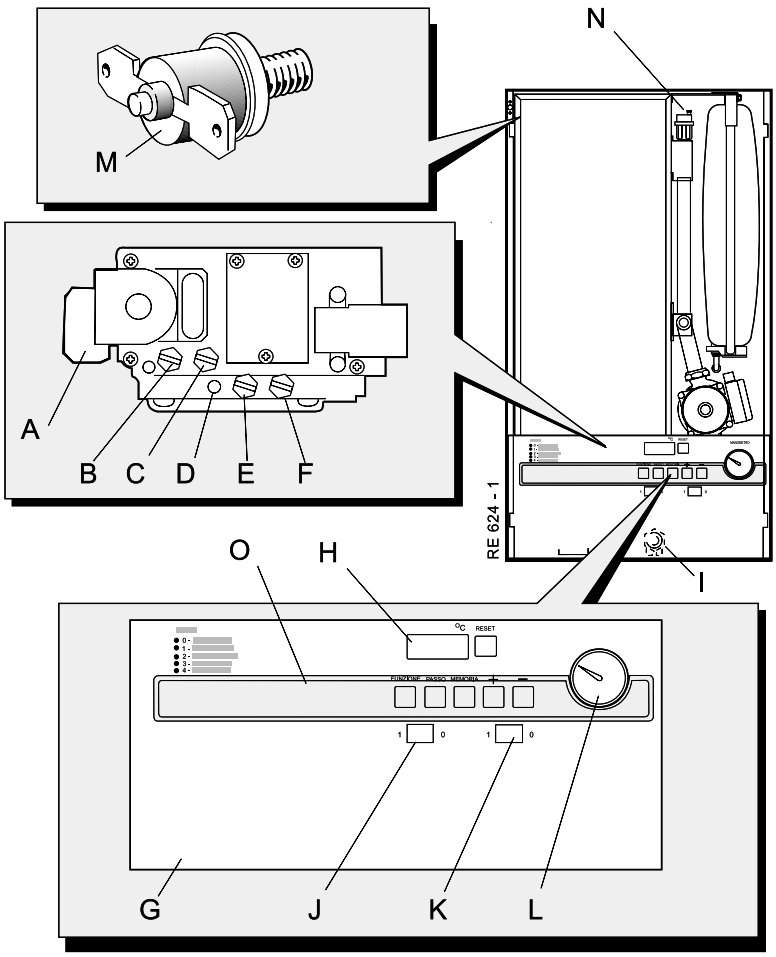

LEGEND

- **A.** Gas control valve
- **B.** Inlet pressure test point
- **C.** Burner pressure test point
- **D.** Offset adjuster (sealed)
- **E.** Fan pressure test point (Hi)
- **F.** Fan pressure test point (Lo)
- **G.** Control panel
- **H.** Display board
- **I.** Gas service cock (hidden)
- **J.** On/Off switch
- **K.** Central heating (CH) on/off switch
- **L.** Central heating pressure gauge
- **M.** Flue thermostat (behind sealing panel)
- **N.** Automatic air vent
- **O.** Cover plate

Control panel: contains digital display and 6 buttons

Button	Function
RESET	Reset of system
MODE	Mode of display
STEP	Step within the mode

Button	Function
STORE	Storage of setting
UP(+)	Increase of setting
DOWN (-)	Decrease of setting

1. Check that the system has been filled and that the boiler is not airlocked. Ensure the automatic air vent screw is open (N)
2. Check that all the drain cocks are closed and that the CH isolating valves are OPEN.
3. Check that the electrical supply is OFF.
4. Check that the gas service cock (I) is OPEN.
5. Remove screw and swing the control panel down .
6. Remove the screw in the burner pressure test point (C) and connect a gas pressure gauge via a flexible tube.
7. Swing the control panel into its working position.
8. Ensure that the external CH controls are calling for heat and set the CH switch (K) to ON.
9. Switch the electricity supply ON.
10. Set the on/off switch (J) to ON.
11. The boiler ignition sequence should now start.

Note.
A self check cycle will take place whenever the RESET button on the control panel is pressed, and also once every 24 hours without a call for heat, to ensure movement of the components once a day.

49 INITIAL LIGHTING - continued

Sequence	Boiler Status
0	No heat request.
1	Fan pre-purge for 8 seconds.
2	Gas valve opens and spark commences.
3	Burner ignition and flame detection (CH).

If ignition does not occur within 8 seconds or if the burner lights and flame presence is not detected then the ignition sequence is repeated for a maximum of 5 times.

If ignition is still unsuccessful the display flashes:

continuously,

indicating a FAULT mode, and the boiler will shut down.

Press the RESET button to return the boiler to STANDBY mode and the ignition sequence will be repeated.

If the boiler again locks out refer to the Fault -Finding section.

13. Check that the burner lights smoothly and that sequence number :

is displayed, indicating that central heating is being supplied.

Note. *The burner will reduce to minimum rate for a few seconds before increasing to maximum rate.*

14. Test for gas soundness around ALL boiler gas components, using leak detection fluid.

15. Operate the boiler for 20 minutes to stabilise the burner temperature.

16. The boiler central heating control is fully modulating, operating between burner pressures of:

13.0 mbar (± 0.2 mbar) MAXIMUM

2.0 mbar (± 0.2 mbar) MINIMUM

These are factory set.

To check the maximum pressure

Remove the controls button cover plate (O).

Select TEST mode by pressing MODE and ' + ' buttons simultaneously (to simulate a call for maximum heat).

The display will read:

To check the minimum pressure

Select TEST mode by pressing MODE and ' - ' buttons simultaneously (to simulate a call for minimum heat).

The display will read:

17. To check the fan pressure signal

Connect a suitable pressure gauge to the pressure tappings (E) and (F) on the gas valve.

Equilibrium fan pressures should be as follows (± 0.2 mbar):

Boiler size Fan pressure mbar (ins. wg.) 300mm flue

kW (Btu)	Max	Min
24 (81 900)	3.5 (1.4)	0.5 (0.24)

This will reduce within acceptable levels up to 3m flue.

18. To return the boiler to normal running STANDBY mode, press + and - buttons simultaneously.

50 GENERAL CHECKS

Make the following checks for correct operation:

CENTRAL HEATING (CH)

1. Ensure that the CH external controls are calling for heat.
2. Set the central heating switch (K) to ON.

   The boiler should complete the self-check cycle - refer to Frame 49 - then the boiler should fire at maximum rate to supply the central heating.

   Note.

   The burner will reduce to minimum rate for a few seconds before increasing to maximum rate.

   The display sequence number should read:

3. Set the central heating external controls to OFF. The burner should go off and the pump continue to run for 3 minutes.

   The display sequence should read:

   returning to

   when the pump stops.

4. Check the correct operation of the programmer (if fitted) and all other system controls. Operate each control separately and check that the main burner corresponds.
5. Swing panel down and remove the pressure gauge and tube. Tighten the sealing screw in the pressure test point, ensuring that a gas-tight seal is made.
6. Swing the control panel back to its working position and secure.
7. Refit the boiler bottom panel.
8. Refit the boiler casing.

WATER CIRCULATION SYSTEM

1. With the system COLD, check that the initial pressure is correct to the system design requirements.

   For pre-pressurised systems, this should be 1.0 bar.

2. With the system HOT, examine all water connections for soundness. The system pressure will increase with temperature rise but should not exceed 2.5 bar.
3. With the system still hot, turn off the gas, water and electricity supplies to the boiler and drain down to complete the flushing process.

   Note. *A flushing solution should be used during the flushing procedure. Flushing solutions; Fernox Superfloc, Sentinel X300 (new systems) or X400 (existing systems). Refer to page 8.*

4. Refill and vent the system, add inhibitor (see Frame 4), clear all air locks and again check for water soundness.
5. Reset the system initial pressure to the design requirement.
6. Balance the system. Refer to Frame 6.
7. Check the condensate drain for leaks and check that it is discharging correctly.
8. Finally, set the controls to the User's requirements.
9. Refit the boiler bottom panel.
10. If an optional programmer kit is fitted then refer to the instructions supplied with the kit.

WATER TEMPERATURES

The design water Central Heating output temperatures is 82 °C maximum.

This temperatures can be checked and setting changed (if required) as follows:

1. To check the temperature:

   a. Select MONITOR mode by pressing the MODE button until the decimal point after the first digit on the display *flashes.*

   The first digit now gives the step number and the last two the temperature.

   b. Select the required step number by pressing the STEP button.

   c. To return the control to the normal running STANDBY mode press the RESET button.

Step number	Temperature °C.
1	CH flow temp °C.
2	CH return temp °C.
4	Outside temp °C. (if fitted)
5	Maximum set value of CH flow temp °C

2. To change the temperature settings:

   a. Select PARAMETER mode by pressing the MODE button until the decimal point after the first digit on the display *shows steadily.*

   The first digit now gives the step number and the last two the value of the setting

   Note. *In this mode it is also possible to switch the boiler on or off .*

   b. Select the required step number by pressing the STEP button.

   c. Reset the temperature to the required value by pressing + and - buttons.

   d. Store the new value by pressing the STORE button. The display should flash twice.

   e. To return the control to the normal running STANDBY mode press the RESET button.

   f. Refit the controls button cover plate.

Stepnumber	Temperature °C.
3	**00** = CH OFF **01** = CH ON
4	Max CH temp (20° to 82 °C)

51 HANDING OVER

After completing the installation and commissioning of the system the installer should hand over to the householder by the following actions:

1. Hand the User Instructions to the householder and explain his / her responsibilities under current Gas Safety (Installation and Use) Regulations, or rules in force.

2. Draw attention to the Lighting Instruction label affixed to the inside of the casing drop down door.

3. Explain and demonstrate the lighting and shutting down procedures.

4. The operation of the boiler, and the use and adjustment of all system controls, should be fully explained to the householder, to ensure the greatest possible fuel economy consistent with the household requirements of both heating and hot water consumption.

   Advise the User of the precautions necessary to prevent damage to the system and to the building, in the event of the system remaining inoperative during frosty conditions.

5. Explain the function and the use of the boiler central heating controls.

6. Explain the function of the boiler fault mode.

   Emphasise that if a fault is indicated, the boiler should be turned off and a registered local heating installer consulted.

7. Explain and demonstrate the function of time and temperature controls, radiator valves etc., for the economic use of the system.

8. If an optional programmer kit is fitted then draw attention to the Programmer Kit User Instructions and hand them to the householder.

9. **Loss of system water pressure**

   Explain that the dial on the control panel indicates the central heating system pressure and that if the normal COLD pressure of the system is seen to decrease over a period of time then a water leak is indicated. In this event a registered local heating installer should be consulted.

   WARNING.

   Do not fire the boiler if the pressure has reduced to zero from the original setting.

10. **After installation, commissioning and customer hand-over instructions please complete the benchmark appliance log book and leave this with the customer.**

11. **IMPORTANT**
    A comprehensive service should be carried out AT LEAST ONCE A YEAR.

    Stress the importance of regular servicing by the local gas region or by a CORGI registered installer.

    As the installer you may wish to undertake the service contract your self or alternatively offer to the customer the benefits of the ***Ideal Care Scheme***, details of which are outlined in the householder pack supplied with this boiler.

52 SERVICING SCHEDULE

To ensure the continued safe and efficient operation of the appliance it is recommended that it is checked at regular intervals and serviced as necessary. The frequency of servicing will depend upon the installation condition and usage but should be carried out at least annually.

It is the law that any service work must be carried out by a registered installer.

As the installer you may wish to undertake the service contract yourself or, alternatively, to the customer the benefits of the Ideal Care scheme, details of which are outlined in the Householder pack supplied with this boiler.

Note.
Some aluminium oxide build-up on the heat exchanger fins is quite usual with this type of condensing boiler. Though removal is recommended annually, the heat exchanger must be inspected and cleaned after a maximum of 2 years operation.

1. Light the boiler and carry out a pre-service check, noting any operational faults.

   Run the boiler for at least 20 minutes and check the gas consumption.

2. **Optional test**
   Connect a suitable gas analyser to the sampling point on the boiler.

   For correct boiler operation, the CO/CO_2 content of the boiler should not be greater than 0.004 ratio. If this is the case, and the gas input is at least 90% of the nominal, then no further action need be taken. If not, proceed to Step 3.

3. Clean the main burner.

4. Clean the heat exchanger.

   Note. *This must be done with the heat exchanger and deposit in a dry condition.*

5. Clean the condensate trap and check the drain for blockage.

6. Check that the flue terminal is unobstructed and that the flue system is sealed correctly.

The servicing procedures are covered more fully in Frames 54 to 60 and *MUST be carried out in sequence.*

53 SAFETY

IMPORTANT.

Always turn OFF the gas supply at the gas service cock, and switch OFF and disconnect the electricity supply to the appliances before servicing.

WARNING.

After completing the servicing or exchange of components always:

- Test for gas soundness and carry out functional checks as appropriate.
- Check the sealing panel is correctly refitted, ensuring that a good seal is made.

Do NOT OPERATE the boiler if the sealing panel is not fitted

Note.

In order to carry out servicing, the boiler casing and sealing panel must be removed. Refer to Frames 54 and 55.

54 CASING REMOVAL

1. Undo the securing screw.
2. Lift to disengage the casing from the back panel and withdraw it from the boiler.

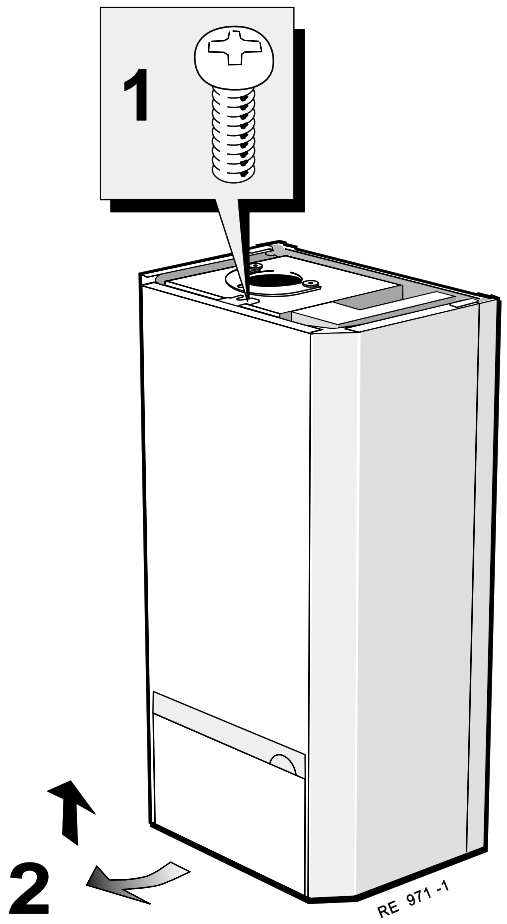

55 BOILER SEALING PANEL REMOVAL

1. Release the 2 retaining clips.
2. Swing the panel open to the left and disengage it from the boiler.

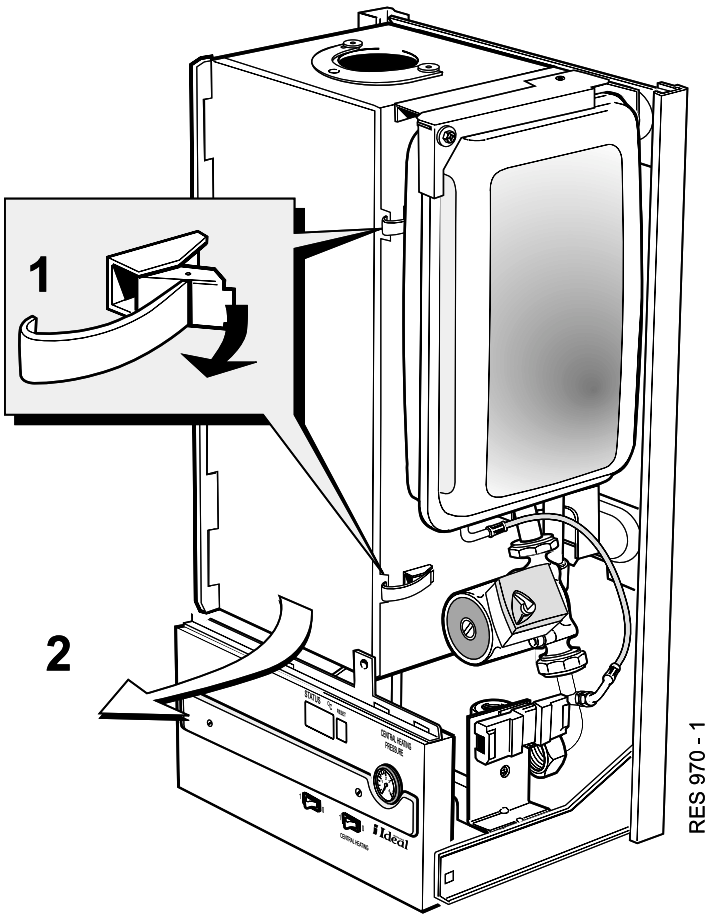

56 FAN REMOVAL AND CLEANING

Legend

A Venturi **B** Sensing pipe

1. Undo the fan inlet venturi top securing screw.
2. Slacken the other 2 securing screws.
3. Slide the venturi upward to disengage the sensing pipe from the gas manifold.
4. Withdraw the venturi, complete with sensing pipe, from the boiler.
5. Depress the retaining clip and rotate the fan to the right to disengage the bayonet fixing on the fan outlet.
6. Draw the fan forward and unplug the electrical lead from the motor.
7. Withdraw the fan from the boiler.

   Check that the fan impeller runs freely. Clean with a soft brush and renew as necessary.
   Note. *Always take care when handling the fan, in order to preserve the balance of the impeller.*

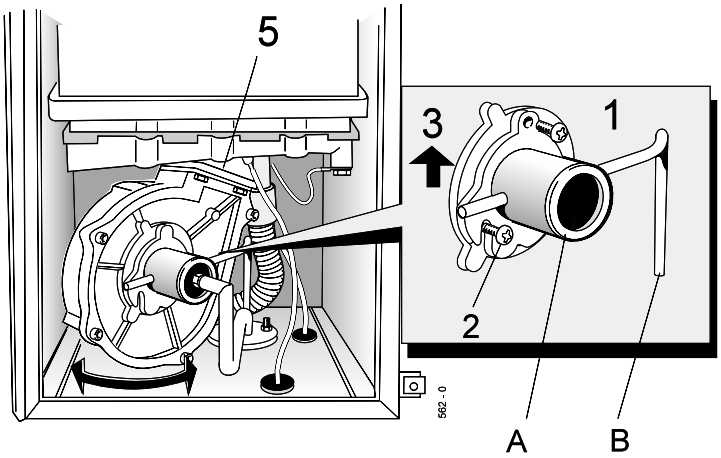

57 BURNER REMOVAL AND CLEANING

1. Disconnect the ignition and detection leads from the electrodes.
2. Undo the 3 fixing screws securing the burner assembly.

   Withdraw the burner assembly downward and out of the heat exchanger.
3. Brush off any deposits that may have collected on the burner, ensuring that the flame ports are unobstructed.
   Note. *Brushes with metallic bristles must NOT be used.*
4. Inspect the spark and detection electrodes. Ensure that they are clean and in good condition - replace if necessary.
5. Check that the spark and electrode gaps are correct.
6. Check that the spark and detection leads are in good condition ,and renew as necessary.

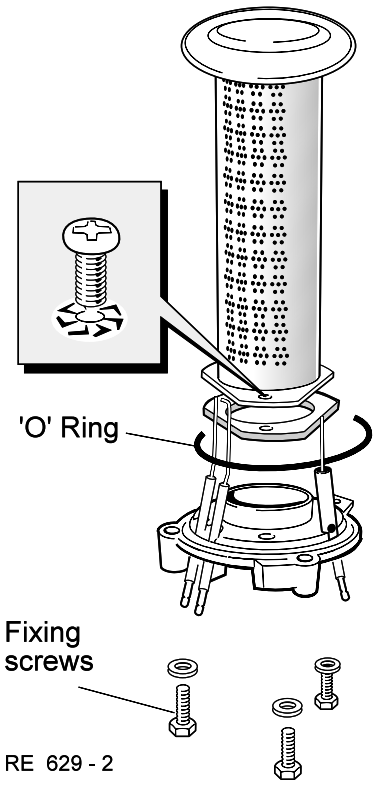

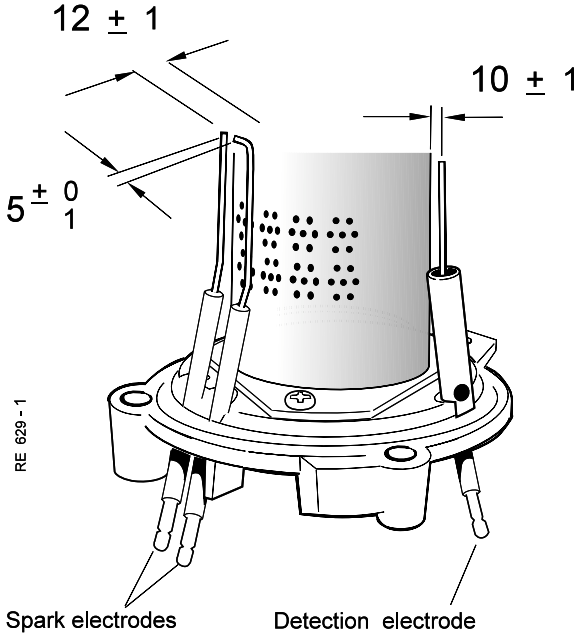

58 CLEANING THE HEAT EXCHANGER

IMPORTANT

This MUST be done with the heat exchanger and deposit in a DRY condition.

Prior to cleaning, run the boiler until a flow temperature of 80 °C is reached - refer to Frame 52, step 1 (Servicing schedule).

1. Place a plastic sheet or similar beneath the boiler and remove all visible loose deposits from the heat exchanger fins, using a suitable brush.
2. Take care to clean debris from the ledge inside the combustion chamber.

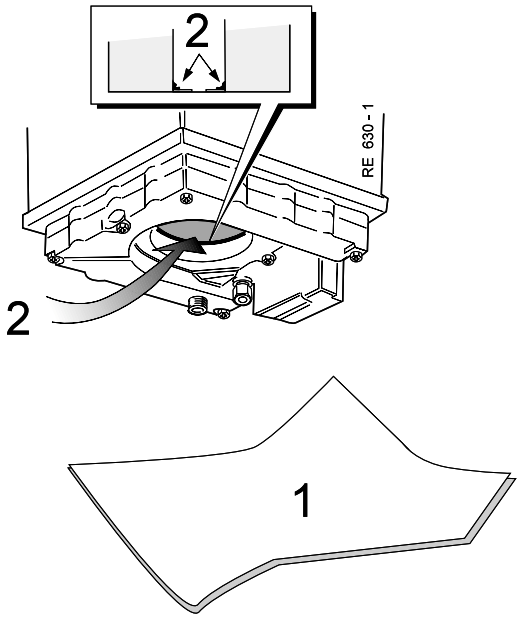

59 CLEANING THE CONDENSATE TRAP

1. Pull off the condensate trap from the bottom panel and carefully empty the contained water into a receptacle.
2. Pull off the trap from the bottom of the boiler.
3. Withdraw the trap from the boiler.
4. Thoroughly flush the trap by running high pressure water through it.

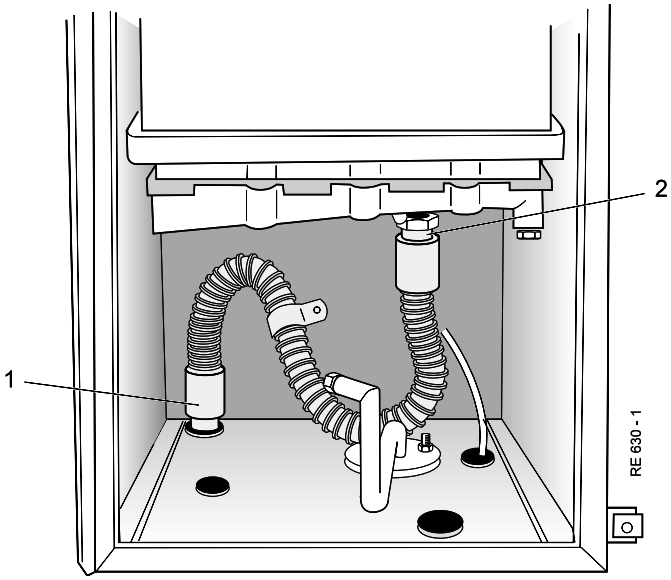

60 RE-ASSEMBLY

Re-assemble the boiler in the following order:

1. Refit the condensate trap.
2. Refit the burner, renewing any damaged or deteriorating sealing gaskets.
3. Reconnect the ignition and detection leads.
4. Reconnect the fan electrical lead.
5. Refit the fan, engaging it in the bayonet fixing. Ensure that the 'O' ring seal is in place.
6. Refit the fan inlet venturi complete with sensing pipe.
7. Refit the boiler sealing panel.

   IMPORTANT.
   Ensure that the boiler sealing panel is correctly fitted and that a good seal is made.
8. Refit the boiler casing.
9. Turn on the gas supply at the gas service cock.
10. Reconnect the electrical supply.

REPLACEMENT OF COMPONENTS

61 GENERAL

WHEN REPLACING ANY COMPONENT :

1. Isolate the electricity supply.
2. Turn off the gas supply.

IMPORTANT

When work is complete, if the sealing panel has been removed, it must be correctly refitted - ensuring that a good seal is made.

THE BOILER MUST NOT BE OPERATED IF THE SEALING PANEL IS NOT FITTED

Note. *In order to replace components in Frames 74 to 82 it is necessary to drain the boiler. Refer to Frame 73.*

62 FLUE THERMOSTAT REPLACEMENT

1. Refer to Frame 61.
2. Remove the boiler casing. Refer to Frame 54.
3. Remove the boiler sealing panel. Refer to Frame 55.
4. Disconnect the flue thermostat electrical leads.
5. Unscrew the thermostat from the side of the heat exchanger.
6. Fit the new flue thermostat ,and re-assemble in reverse order.

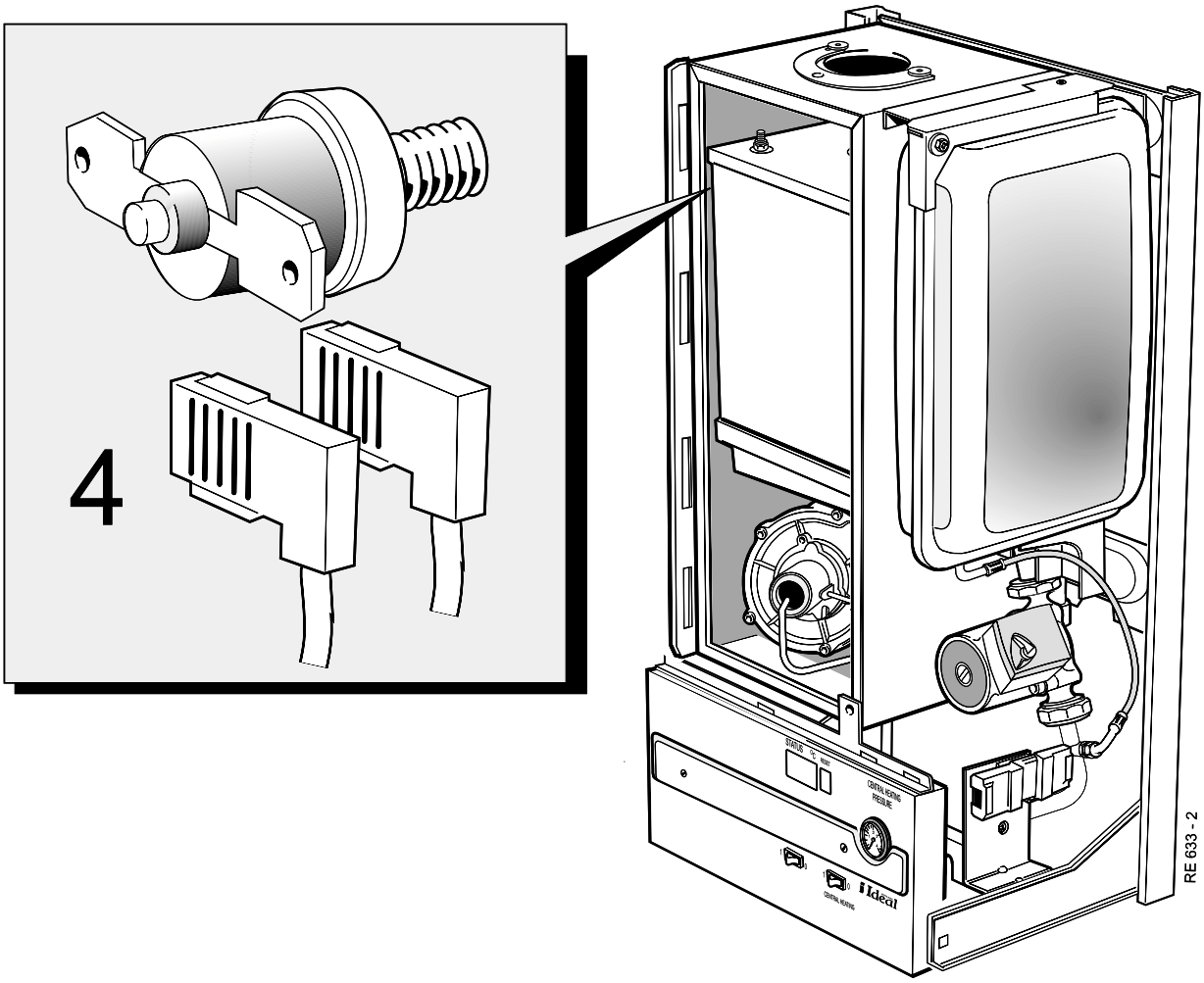

63 FAN UNIT REPLACEMENT

Legend

A Venturi
B Sensing pipe

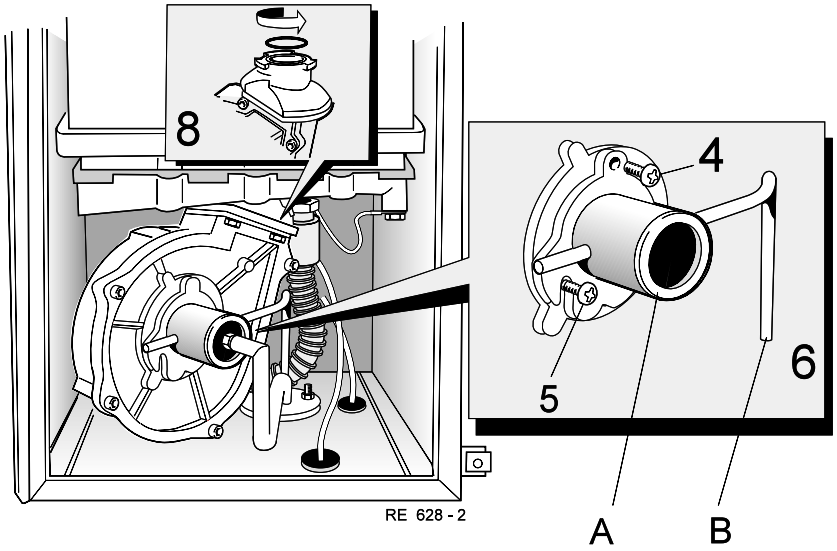

1. Refer to Frame 61.
2. Remove the boiler casing. Refer to Frame 54.
3. Remove the boiler sealing panel. Refer to Frame 55.
4. Undo the fan inlet venturi top securing screw.
5. Slacken the other 2 securing screws.
6. Slide the venturi upward to disengage the sensing pipe from the gas manifold.
7. Withdraw the venturi, complete with sensing pipe, from the boiler.
8. Depress the retaining clip and rotate the fan to the right to disengage the bayonet fixing on the fan outlet.
9. Draw the fan forward and unplug the electrical lead from the motor.
10. Withdraw the fan from the boiler.

Note. *Always take care when handling the fan, in order to preserve the balance of the impeller.*

11. Transfer the fan outlet adaptor to the new fan, renewing any damaged or deteriorating gasket.
12. Fit the new fan in reverse order, ensuring that the 'O' ring seal in the fan outlet adaptor is in place.
13. Check the operation of the new fan.

64 BURNER REPLACEMENT

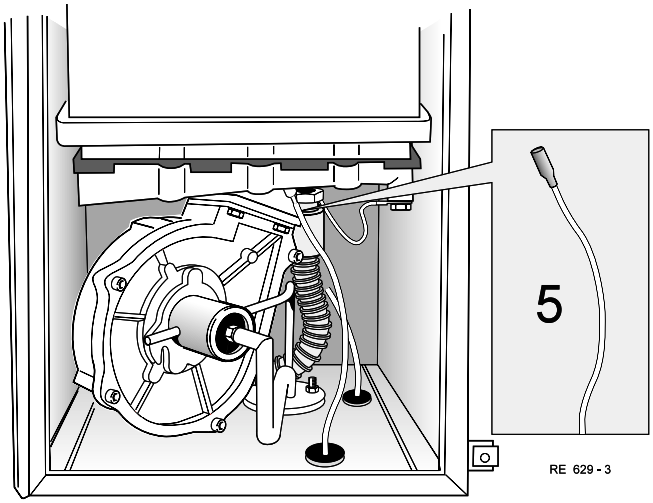

Legend

A	Burner	**C**	Burner mounting flange
B	Gasket	**D**	'O' ring seal

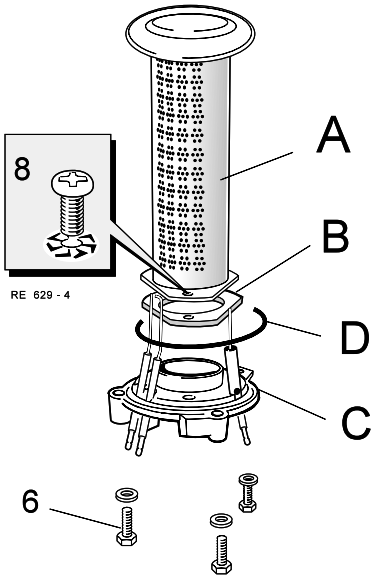

1. Refer to Frame 61.
2. Remove the boiler casing. Refer to Frame 54.
3. Remove the boiler sealing panel. Refer to Frame 55.
4. Remove the fan assembly. Refer to Frame 56.
5. Disconnect the ignition and detector leads.
6. Undo the 3 fixing screws securing the burner assembly.
7. Withdraw the burner assembly downward and out of the heat exchanger.
8. Remove the 3 securing screws and withdraw the burner from the mounting flange.
9. Fit the new burner, replacing any damaged or deteriorating gasket.
10. Re-assemble in reverse order ensuring that the 'O' ring seal in the burner mounting flange is in place.

Note. *Check the spark and detection gaps. Refer to Frame 39.*

65 SPARK AND DETECTION ELECTRODE REPLACEMENT

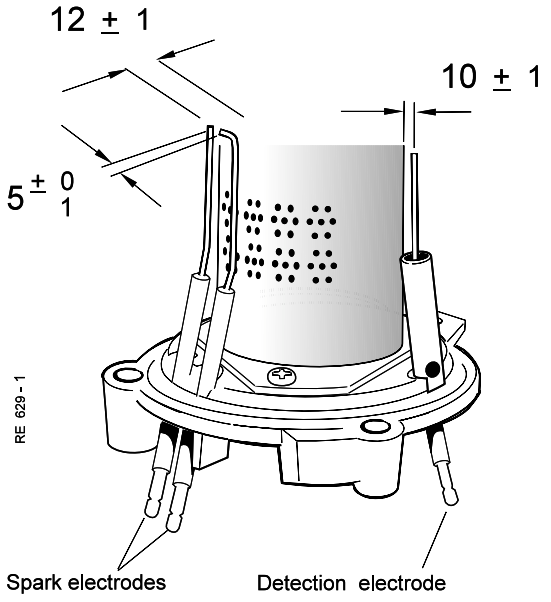

1. Refer to Frame 61.
2. Remove the boiler casing. Refer to Frame 54.
3. Remove the boiler sealing panel. Refer to Frame 55.
4. Remove the fan assembly. Refer to Frame 56.
5. Remove the burner assembly. Refer to Frame 57.
6. Undo the electrode securing screw, as required, and withdraw the electrode.
7. Fit new electrodes as required, ensuring that the gaskets are in good condition and are sealing correctly - renew as necessary.
8. Check the spark / detection gaps.
9. Re-assemble in reverse order ensuring that the 'O' ring seal in the burner mounting flange is in place.
10. Check the ignition and operation of the burner.

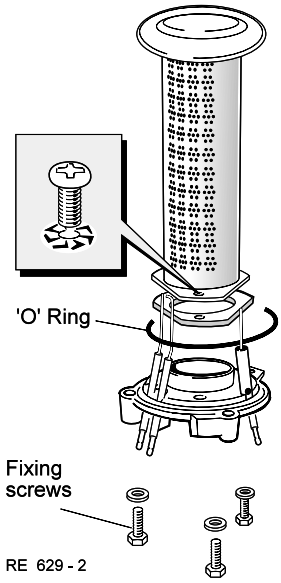

66 BURNER INJECTOR REPLACEMENT

1. Refer to Frame 61.
2. Remove the boiler casing. Refer to Frame 54.
3. Remove the boiler sealing panel. Refer to Frame 55.
4. Unscrew the injector from the injection pipe.
5. Fit the new injector, using a suitable jointing compound sparingly.
6. Re-assemble in reverse order.

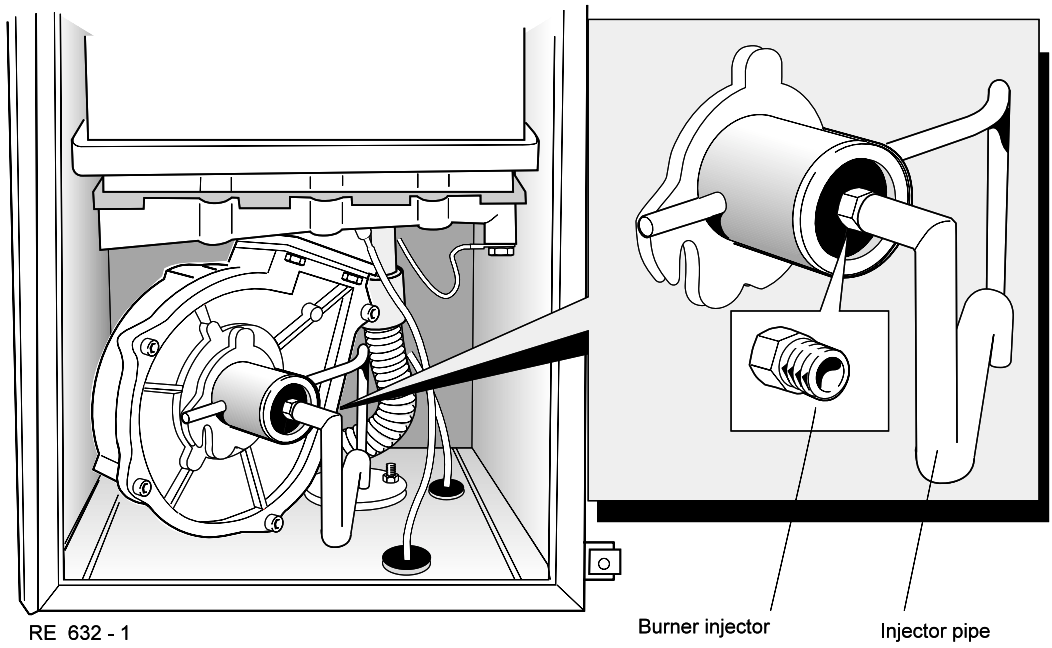

67 GAS CONTROL VALVE REPLACEMENT

Note. *Ensure that the valve is the correct one for the boiler.*
(The valve is factory set and sealed. No adjustment is necessary)

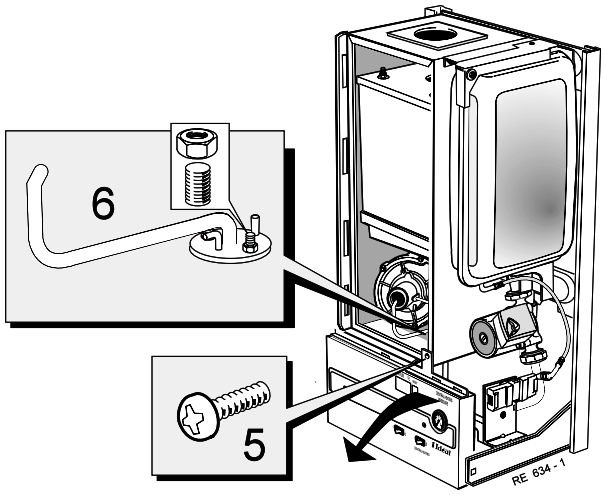

1. Refer to Frame 61.
2. Remove the boiler casing. Refer to Frame 54.
3. Remove the boiler sealing panel. Refer to Frame 55.
4. Remove the fan assembly. Refer to Frame 56.
5. Release the securing screw and swing the control panel down to gain access to the gas valve.
6. Undo the 2 nuts securing the gas injection pipe and remove the pipe.
7. Undo the gas inlet pipe union.
8. Disconnect the electrical leads from the valve solenoids.
9. Supporting the valve, undo the 3 securing screws (from inside the boiler chamber) and withdraw the valve, complete with mounting brackets and gas inlet pipe.
10. Transfer the mounting brackets and sensing pipe to the new valve, renewing any damaged or deteriorating sealing gaskets.
11. Transfer the gas inlet pipe to the new valve, using the new sealing washer and 'O' ring provided.
12. Fit the new valve in reverse order, replacing any damaged gaskets.
13. Check the operation of the new valve.

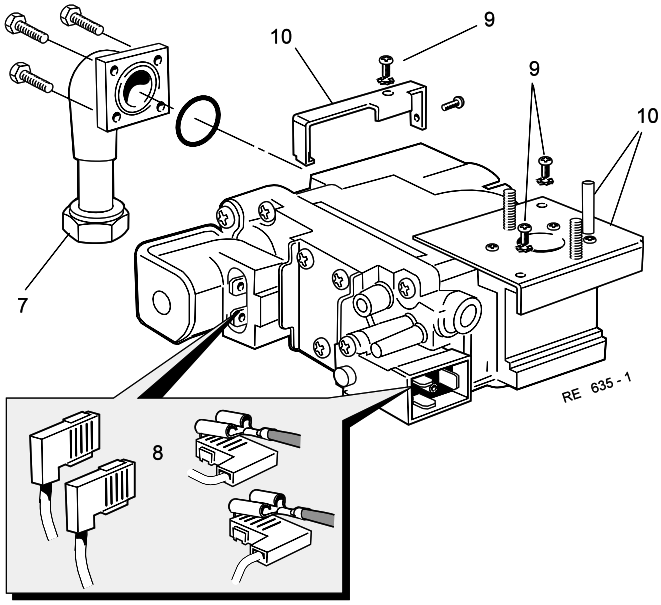

68 GAS CONTROL VALVE SOLENOID REPLACEMENT

1. Refer to Frame 61.
2. Remove the boiler casing. Refer to Frame 54.
3. Swing the control panel down.
4. Disconnect the electrical leads from the valve solenoids, as required.
5. Undo the securing screws as required and remove the solenoid.
6. Fit the new solenoid and re-assemble in reverse order.
7. Check the operation of the new solenoid.

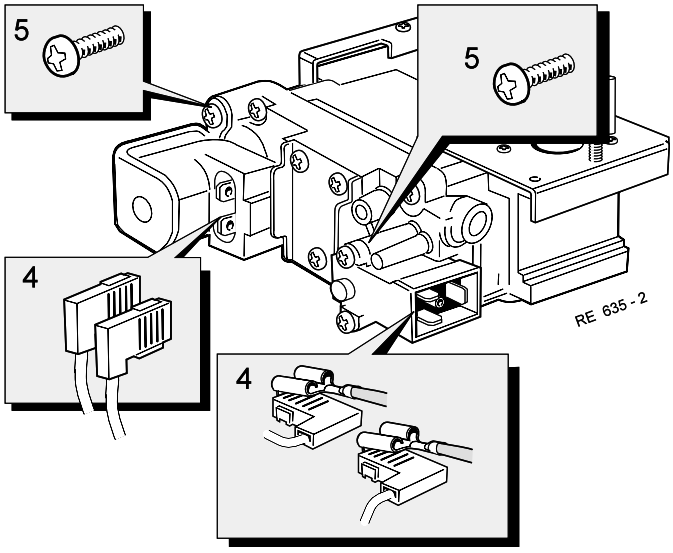

69 GASMODUL CONTROL UNIT REPLACEMENT

Ensure that the control unit is the correct one for the boiler.

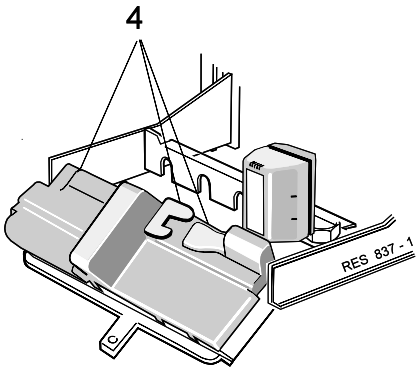

1. Refer to Frame 61.
2. Remove the boiler casing. Refer to Frame 54.
3. Swing the control panel down.
4. Undo the 3 securing screws and unclip the plastic cover from the back of the control panel.
5. Unplug the 3 electrical leads from the control unit.
6. Unplug the display board.
7. Unplug the spark and detector leads.
8. Undo the 4 securing screws and withdraw the control unit from the panel.
9. Fit the new control unit and re-assemble in reverse order. Ensure that all electrical connections are correctly remade.
10. Check the operation of the boiler.

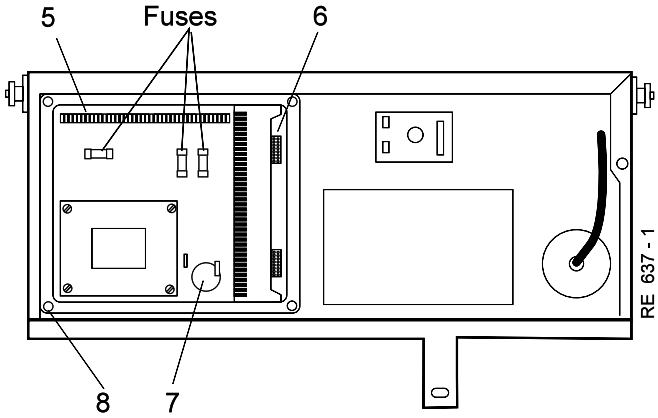

70 DISPLAY BOARD REPLACEMENT OR FAN SPEED CONTROL BOARD REPLACEMENT

1. Refer to Frame 61.
2. Remove the boiler casing. Refer to Frame 54.
3. Swing the control panel down.
4. Undo the 3 securing screws and unclip the plastic cover from the back of the control panel.
5. Unplug the lead(s) from the board.
6. Prise the board off the mounting posts.
7. Fit the new board and re-assemble in reverse order. Ensure that all electrical connections are correctly remade.
8. Check the operation of the boiler.

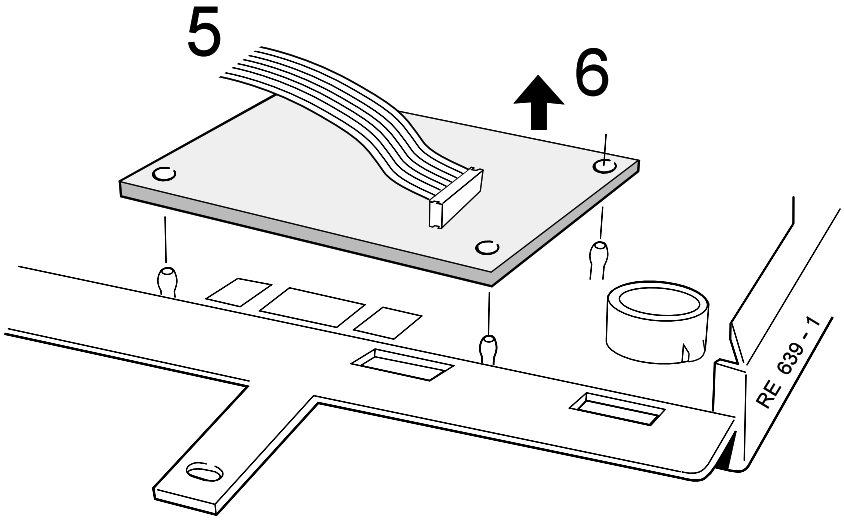

Display board shown

71 ON/OFF & CH SWITCH REPLACEMENT

1. Refer to Frame 61.
2. Remove the boiler casing. Refer to Frame 54.
3. Swing the control panel down.
4. Unclip the plastic cover from the back of the control panel.
5. Disconnect the electrical leads from the switch.
6. Compress the retaining clips and prise the switch out of the panel.
7. Fit the new switch and re-assemble in reverse order. Ensure that the switch is the right way round and that all electrical connections are correctly remade.
8. Check the operation of the boiler.

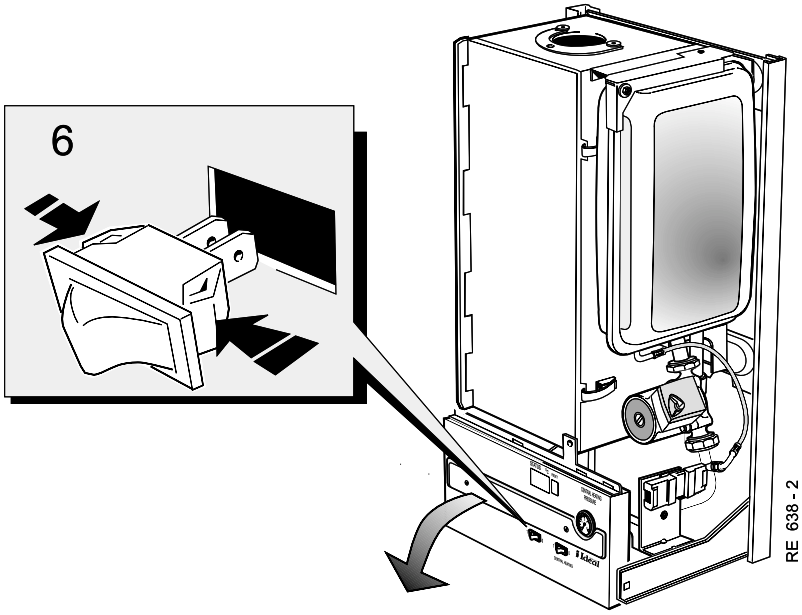

72 CONDENSATE TRAP REPLACEMENT

1. Refer to Frame 61.
2. Remove the boiler casing. Refer to Frame 54.
3. Remove the boiler sealing panel. Refer to Frame 55.
4. Remove the fan assembly. Refer to Frame 56.
5. Pull off the condensate trap from the bottom panel and carefully empty the contained water into a receptacle.
6. Pull off the trap from the bottom of the boiler.
7. Withdraw the trap from the boiler.
8. Fit the new trap and re-assemble in reverse order.

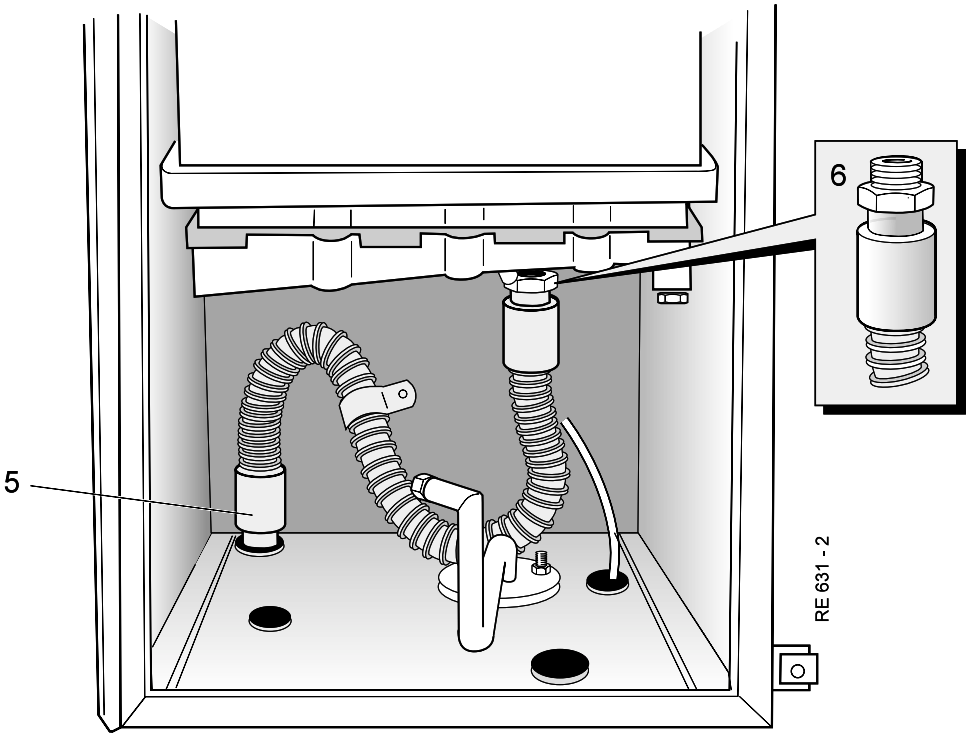

73 DRAINING THE BOILER

IMPORTANT In order to replace the components in Frames 74 to 82 it is necessary to drain the boiler.

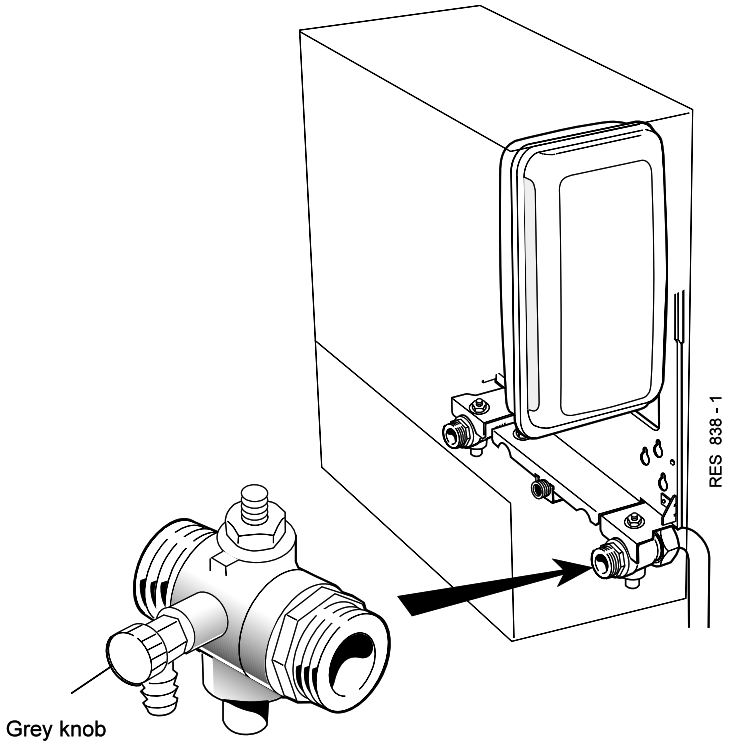

1. Refer to Frame 61.
2. Close the CH isolating valves.
3. Open the boiler drain tap and drain the water into a suitable receptacle.
4. To refill the boiler refer to Frames 5, 37 and 38.

74 CH THERMISTOR SENSOR REPLACEMENT

Note. *There are 2 control thermistors - one on the boiler flow boss and one on the return boss.*

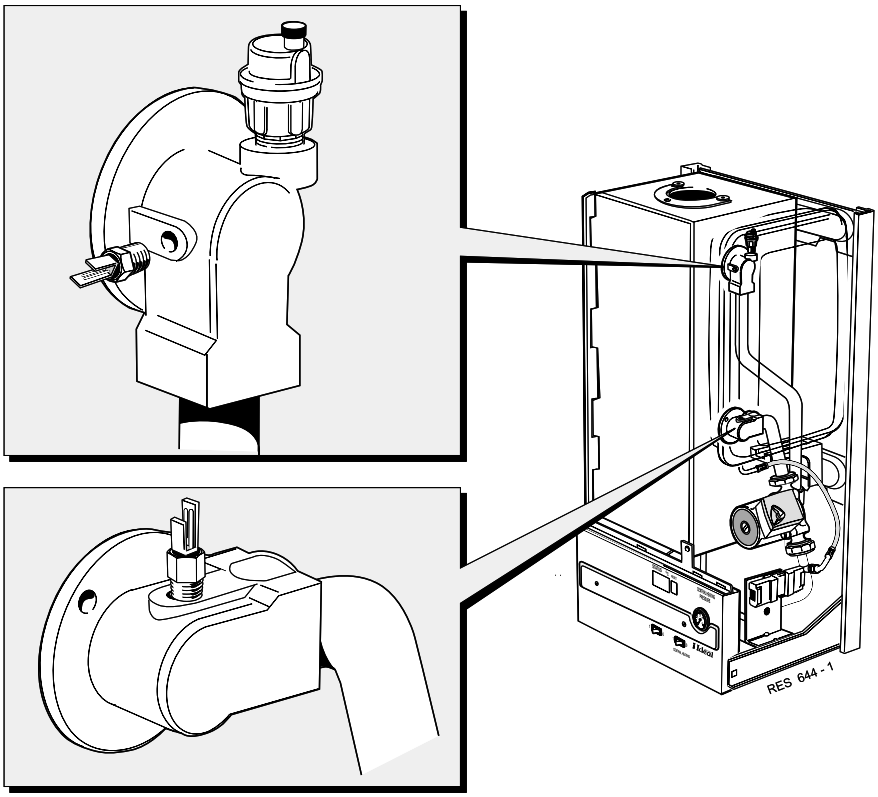

1. Refer to Frame 61.
2. Remove the boiler casing. Refer to Frame 54.
3. Drain the boiler - refer to Frame 73.
4. Disconnect the flexible hose from the expansion vessel. Release the expansion vessel retaining bracket allowing the expansion vessel to be removed, giving access to the thermistor sensors.
5. Pull the electrical lead off the sensor.
6. Unscrew the sensor from the boss.
7. Fit the new sensor, using a suitable jointing compound, and re-assemble in reverse order.

75 PRESSURE GAUGE REPLACEMENT

1. Refer to Frame 61.
2. Remove the boiler casing. Refer to Frame 54.
3. Drain the boiler. Refer to Frame 73.
4. Swing the control panel down.
5. Unscrew the 3 screws and unclip the plastic cover from the back of the control panel.
6. Disengage the capillary from the control panel.
7. Disconnect the pressure gauge capillary from the pipework.
8. Compress the retaining lugs and withdraw the gauge from the control panel.
9. Fit the new gauge and re-assemble in reverse order, ensuring that:
   - **a.** The capillary is carefully and neatly routed, as previously.
   - **b.** The gauge is correctly orientated within the panel.

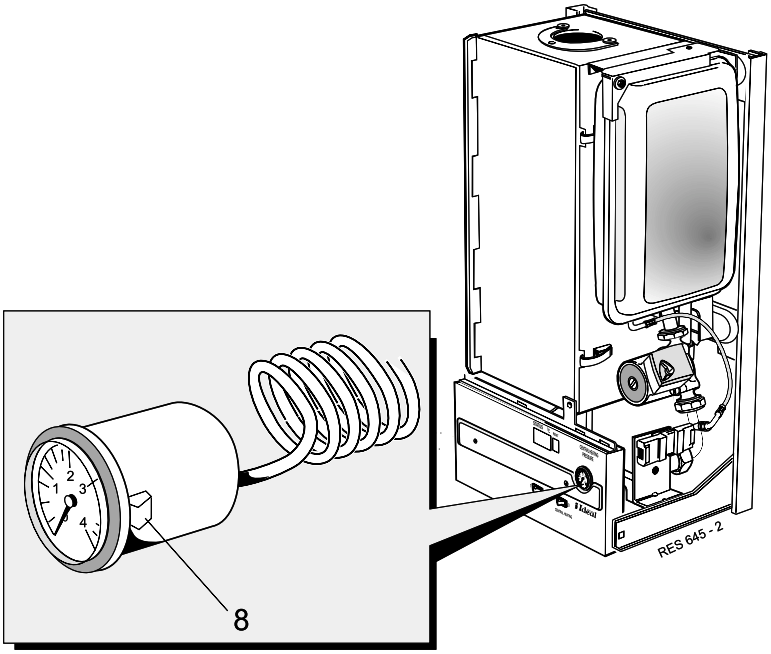

76 PUMP REPLACEMENT

1. Refer to Frame 61.
2. Remove the boiler casing. Refer to Frame 54.
3. Drain the boiler. Refer to Frame 73.
4. Swing the control panel down.
5. Undo the pump top and bottom union connections and draw the pump forward.
6. Supporting the pump, remove the terminal box cover and disconnect the electrical leads.
7. Unscrew the gland nut and withdraw the cable from the terminal box.
8. Withdraw the pump from the boiler.
9. Fit the new pump and re-assemble in reverse order, ensuring that:
   - **a.** The new seals (provided) are fitted.
   - **b.** The electrical connections are correctly remade.
   - **c.** The pump selector switch is set at position 3.
10. Check the operation of the new pump.

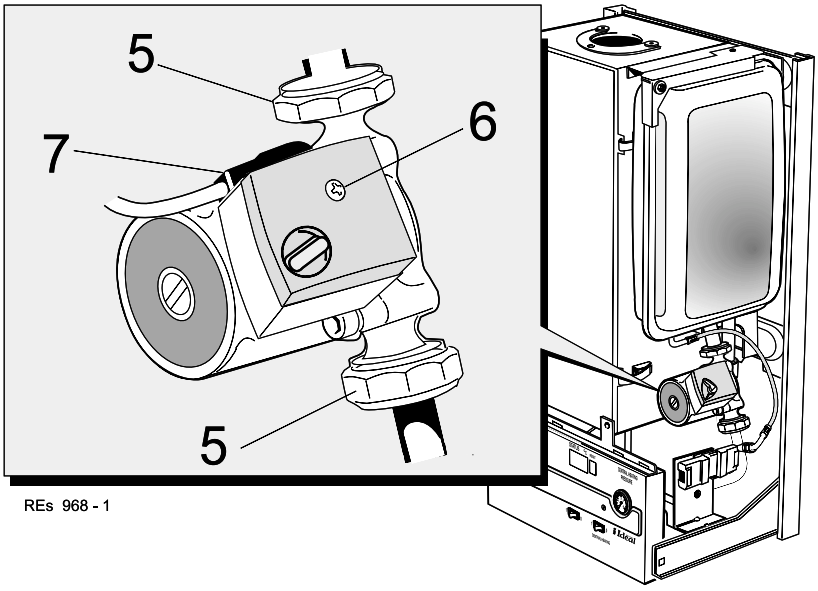

REs 968 - 1

77 SAFETY VALVE REPLACEMENT

1. Refer to Frame 61.
2. Remove the boiler casing. Refer to Frame 54.
3. Drain the boiler. Refer to Frame 73.
4. Swing the control panel down.
5. Disconnect the discharge pipe.
6. Remove the socket screw from inside the fitting and pull the valve off the connecting pipe.
7. Fit the new valve, complete with the 'O' ring provided, and re-assemble in reverse order.
8. Check the operation of the new valve.

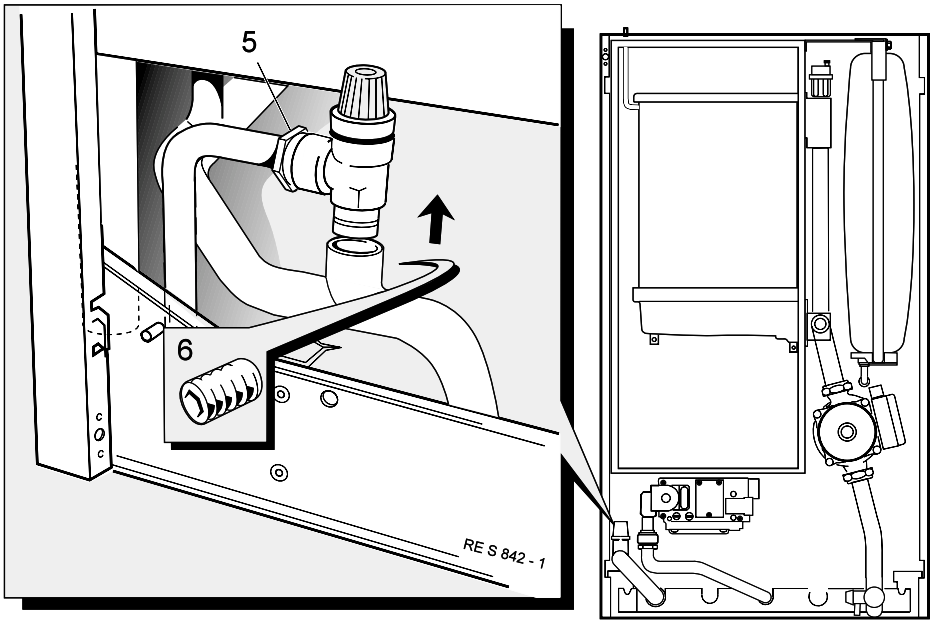

78 AUTOMATIC AIR VENT REPLACEMENT

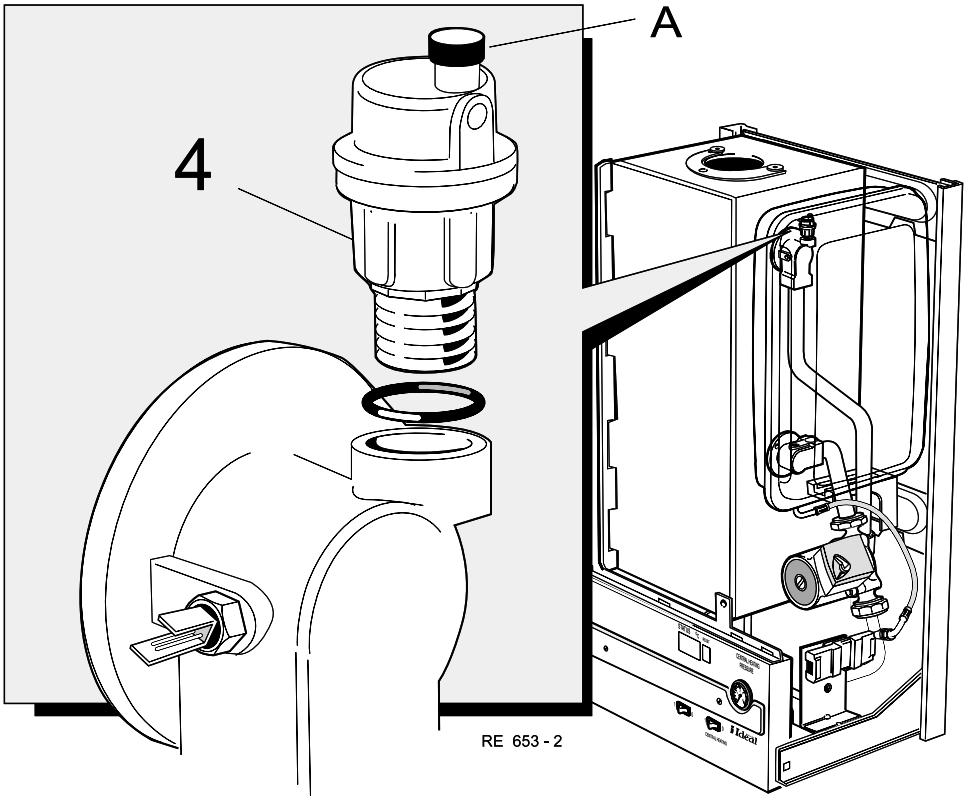

1. Refer to Frame 61.
2. Remove the boiler casing. Refer to Frame 54.
3. Drain the boiler. Refer to Frame 73.
4. Disconnect the flexible hose from the expansion vessel. Release the expansion vessel retaining bracket, allowing the expansion vessel to be moved, giving access to the air vent.
5. Unscrew the air vent from the boiler flow boss.
6. Fit the new air vent, complete with 'O' ring provided, and re-assemble in reverse order.
   IMPORTANT. Ensure that the vent cap (A) is loose.

79 WATER PRESSURE SWITCH REPLACEMENT

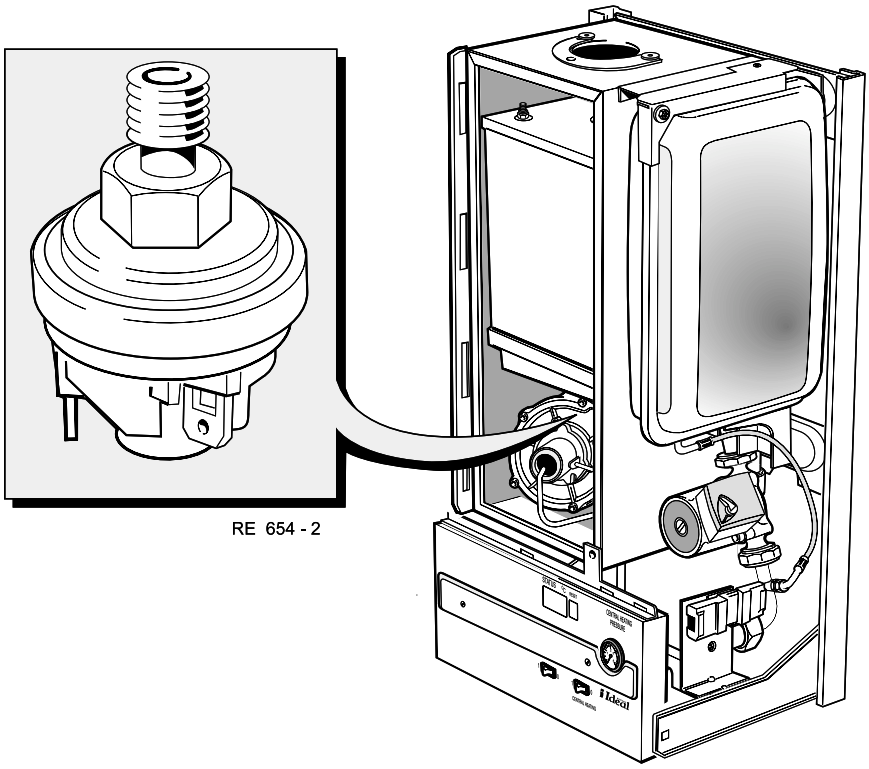

1. Refer to Frame 61.
2. Remove the boiler casing. Refer to Frame 54.
3. Remove the boiler sealing panel. Refer to Frame 55.
4. Remove the fan assembly. Refer to Frame 56.
5. Drain the boiler. Refer to Frame 73.
6. Drain the boiler heat exchanger. Refer to Frame 81.
7. Disconnect the electrical leads from the pressure switch.
8. Unscrew the switch from the boss in the bottom of the heat exchanger, and withdraw it from the boiler.
9. Fit the new switch, using a suitable jointing compound, and re-assemble in reverse order.
10. Check the operation of the boiler.

80 CH EXPANSION VESSEL REPLACEMENT

1. Refer to Frame 61.
2. Remove the boiler casing. Refer to Frame 54.
3. Drain the boiler. Refer to Frame 73.
4. Undo the expansion vessel flexible hose connection.
5. Undo the top retaining bracket screw and remove.
6. Slide the expansion vessel out of the support rails.
7. Fit the new vessel and re-assemble in reverse order.
8. Check the operation of the boiler.

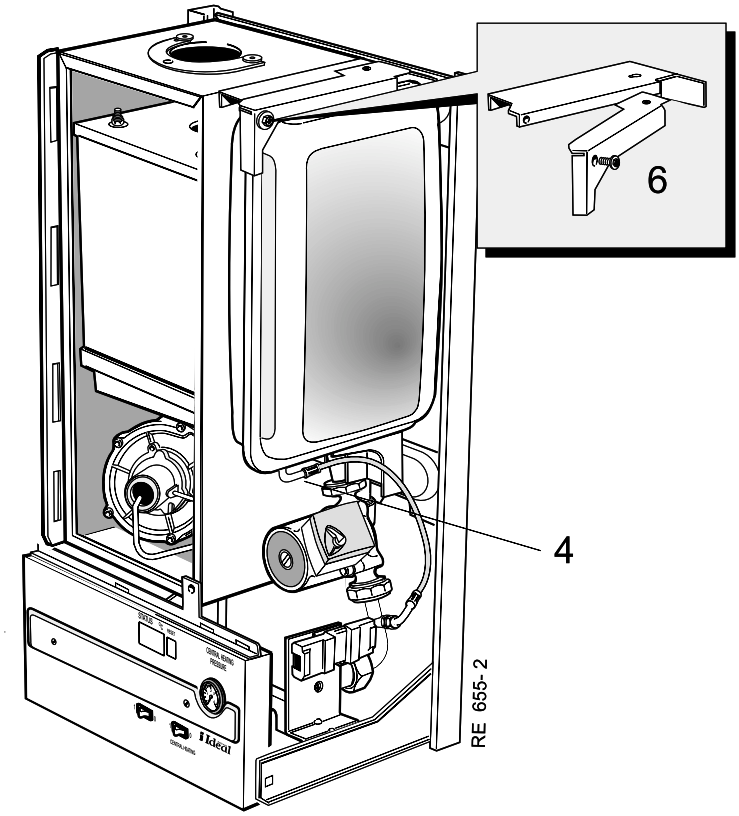

81 HEAT EXCHANGER REPLACEMENT

IMPORTANT

Before starting the removal procedure, protect the gas and electrical controls with a waterproof sheet or plastic bag.

1. Refer to Frame 61.

2. Remove the boiler casing. Refer to Frame 54.

3. Remove the boiler sealing panel. Refer to Frame 55.

4. Drain the boiler. Refer to Frame 73.

5. Drain the heat exchanger via the drain point.

6. Remove the flue thermostat. Refer to Frame 62.

7. Remove the fan assembly. Refer to Frame 56.

8. Remove the burner assembly . Refer to Frame 57.

9. Remove the condensate trap. Refer to Frame 59.

10. Remove the CH expansion vessel. Refer to Frame 80.

11. Remove the pump. Refer to Frame 76.

12. Remove the water pressure switch (hidden). Refer to Frame 79.

13. Undo the 2 back retaining screws.

14. Disconnect the flow and return thermistor sensor leads.

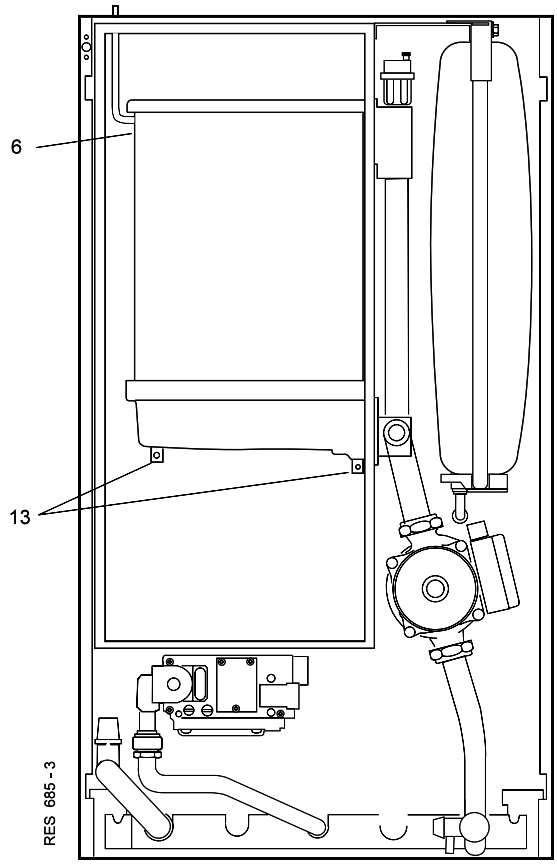

82 HEAT EXCHANGER REPLACEMENT - continued

15. Pull out the flow pipe retaining pin.

16. Pull the flow pipe down and out of the flow boss.

17. Rotate the pipe to the right and withdraw it from the bottom socket.

18. Pull out the return pipe retaining pin.

19. Pull the pipe out of the return boss and withdraw it from the boiler.

20. Undo the 4 flow and return boss retaining screws.

21. While supporting the heat exchanger from below, withdraw the bosses from the flow and return tappings. Check the 'O' ring seals for damage and replace, if necessary.

22. Lower the heat exchanger to disengage from the flue connector tube, and withdraw it from the boiler.

23. Fit the new heat exchanger and re-assemble in reverse order.

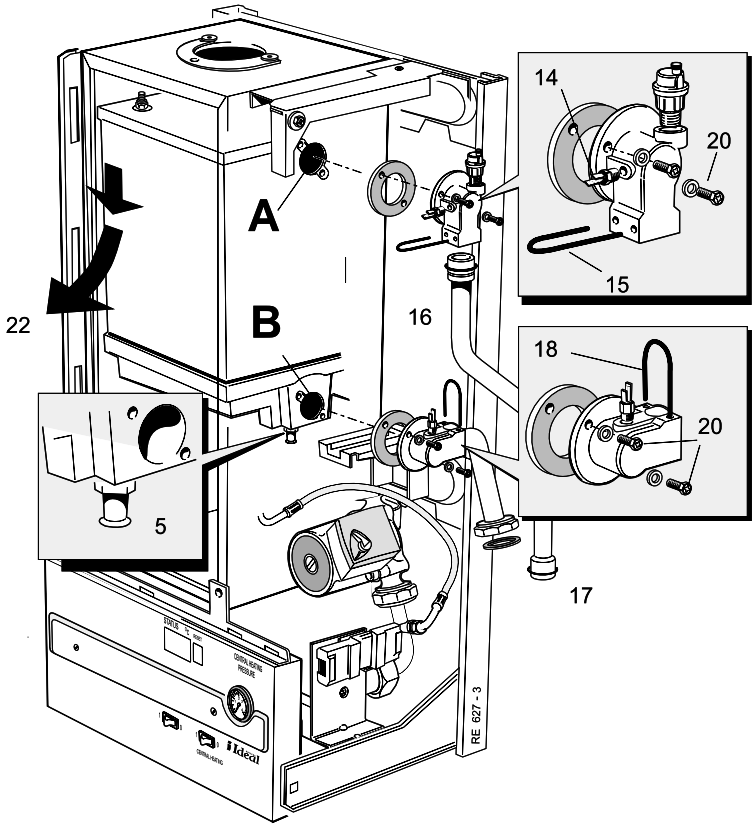

83 BOILER SEALING PANEL SEAL REPLACEMENT

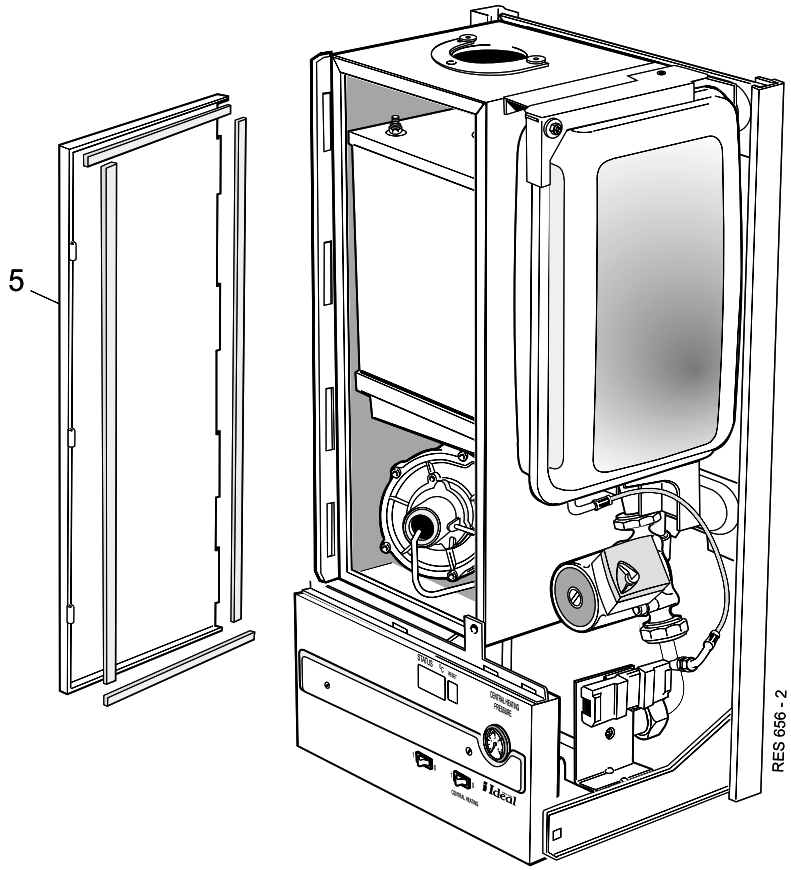

1. Refer to Frame 61.
2. Remove the boiler casing. Refer to Frame 54.
3. Remove the boiler sealing panel. Refer to Frame 55.
4. Remove the old seal and thoroughly clean the panel surfaces.
5. Fit the new self adhesive seals to the panel.
6. Re-assemble in reverse order.

Note.

Ensure that the boiler sealing panel is correctly seated, compressing the sealing strip to make an airtight joint.

84 FAULT FINDING

Note. *To gain access to the Gas module control buttons remove the cover plate . Refer to Frame 91.*

The boiler Gasmodul control unit is equipped with a fault diagnostic system.

In normal standby mode the first digit of the display indicates the boiler sequence, and the last 2 digits the boiler flow temperature.

Sequence	Function
0	Standby - no heat request
1	Fan pre-purge
2	Ignition
3	Burner on - CH
4	Burner on - DHW (*not applicable*)
5	Airflow switch not correct (*not applicable*)
6	Burner off in CH mode (flow temperature T_1 >5°C above set flow temperature **Tset**)
7	Pump overrun - CH mode
9 (Fault Condition)	Flow temperature T_1 > 95 °C
	Return temperature T_2 > **Tset** - 10 °C
	T_1 - T_2 > 35 °C
	T_1 - T_2 negative before lockout

Note. *The Gasmodul control unit is fitted with 3 fuses. If the boiler fails to operate, check these first. To gain access to the fuses, refer to Frame 69.*

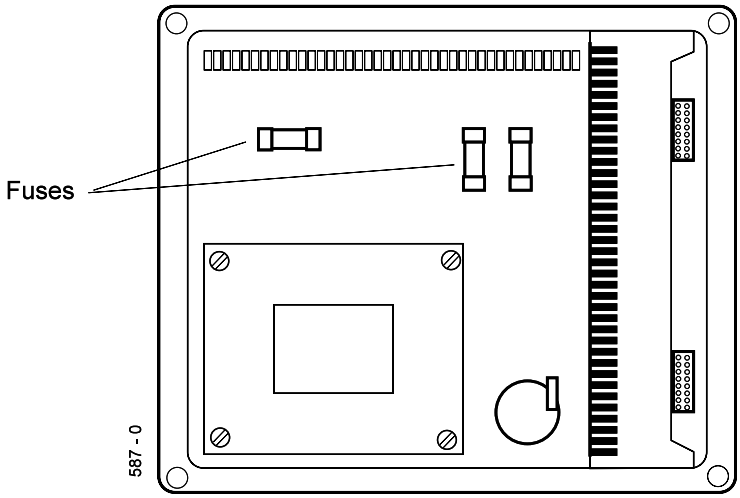

IMPORTANT.

At the end of any fault finding always refit the control buttons cover plate.

85 FAULT FINDING - continued

If a fault condition develops, the first digit and the last 2 digits of the display flash alternately the following codes, according to the fault.

* internal failure - electronic

Code	Fault	Code	Fault
0	False flame	00	
1	Short circuit 24V	01	
2	No flame detection	03	*
4	Controller	04	Non-volatile lockout
4		05	*
4		06	*
4			
4		07	*
4		10	*
4		11	*
4		13	*
4		14	*
4		15	*
4		16	*
4		17	*
4		24	Flow and return sensors **NTC_1** and **NTC_2**
			reversed
4		26	Minimum gas pressure
4		30	Maximum difference between **T_1** and **T_2**
			exceeded
4		31	NTC_1 short circuit
4		32	NTC_2 short circuit
4		36	NTC_1 open
4		37	NTC_2 open
4		41	*
4		42	*
4		60	*
4		08	Pressure differential switch failure (not
4			applicable)
5	Air flow	28	Fan not running / no tacho signal
5		29	Fan keeps turning / no tacho signal
9		12	Water pressure switch or flue thermostat
			failure
9	Maximum temperature	18	Flow temperature T_1 too high
9		19	Return temperature T_2 too high
9		25	Flow temperature T_1 increase too fast

SHORTS LIST OF PARTS

The following are parts commonly required as replacements, due to damage or expendability.

Their failure or absence is likely to affect the safety and / or performance of this appliance.

When ordering spares please quote:

1. Boiler model
2. Appliance G.C. No.
3. Description
4. Quantity
5. Product number

Key No.	G.C. Part No.	Description	Qty.	Product Number
1		Main burner	1	075 153
2	398 065	Main burner injector, Bray Cat 10 - size 2300	1	004 760
3		Gas control valve - SIT NOVAMIX 0828110	1	075 152
4		Flame detection electrode and gasket - BUCCLEUCH	1	075 162
5		Ignition electrode and gasket - BUCCLEUCH	1	075 150
6		Control unit - GASMODUL 1455D	1	075 149
7		Display board - GASMODUL	1	139 349
8		Fan speed control board	1	139950
9	E00 050	Water pressure switch - SIT	1	075 176
10		CH flow and return thermistor sensors - CROSSLAND COMPONENTS	2	150 260
11	E00 055	Pressure gauge - ALTEKNIK	1	138 953
12	E00 056	On/off switch and CH on/off switch - ARCOELECTRIC	2	139 603
13		Fan assembly - EBM	1	139 368
15		Safety valve - CALEFFI	1	075 146
16		CH expansion vessel	1	075 142
17		Pump (with gaskets) - GRUNDFOS UPS 15-60	1	075 139
18	379 796	Automatic air vent - CALEFFI	1	113 116
21		Sealing panel seals	4	075 137
36	378 935	Flue thermostat - ELMWOOD	1	138 097
37		Condensate trap	1	075 095
49		Boiler casing, painted white, with controls dropdown door	1	075 076
50		Control panel	1	075 092
54		Control valve solenoid - SIT	1	075 205
55		Control valve solenoid - SIT	1	075 206

86 SHORT PARTS LIST

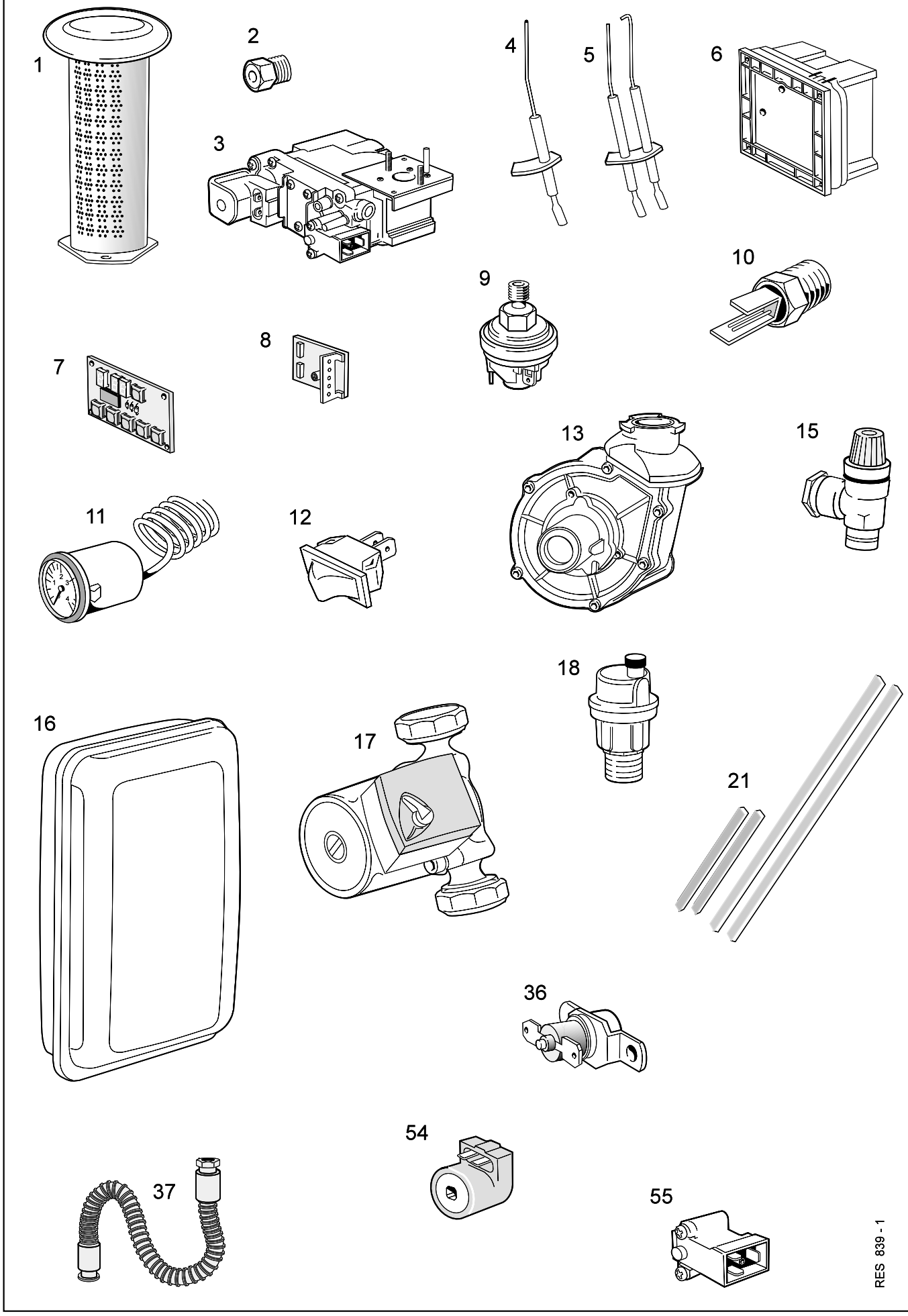

87 BURNER ASSEMBLY / GAS CONTROL - Exploded View

Legend

1. Burner
2. Burner injector
3. Gas valve
4. Detector electrode
5. Ignition electrode
13. Fan
14. Fan inlet venturi
19. Fan pressure sensing pipe
42. 'O' ring
43. 'O' ring
44. 'O' ring
45. Gasket (rubber)
46. Gasket (Cork)
54. EV1 solenoid
55. EV2 solenoid
60. 'O' ring
61. Burner gasket
70. Gas valve mounting bracket
71. Gas valve support bracket
72. Gas injection pipe

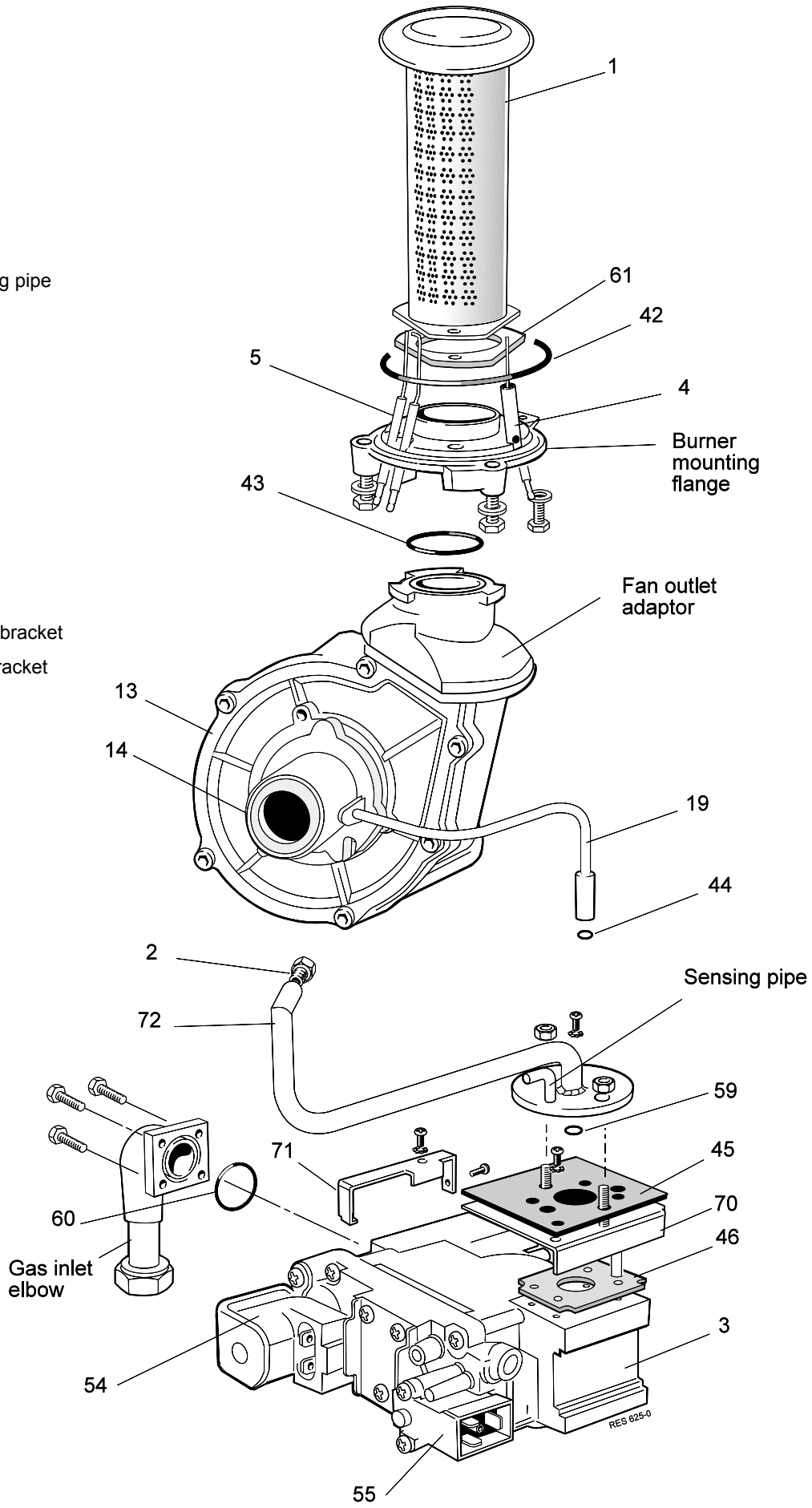

88 CONTROL PANEL ASSEMBLY - Exploded View

Legend

6. Gasmodul control
7. Display board
8. Fan speed control board
11. CH pressure gauge
12. Rocker switch
50. Control panel
58. Relay

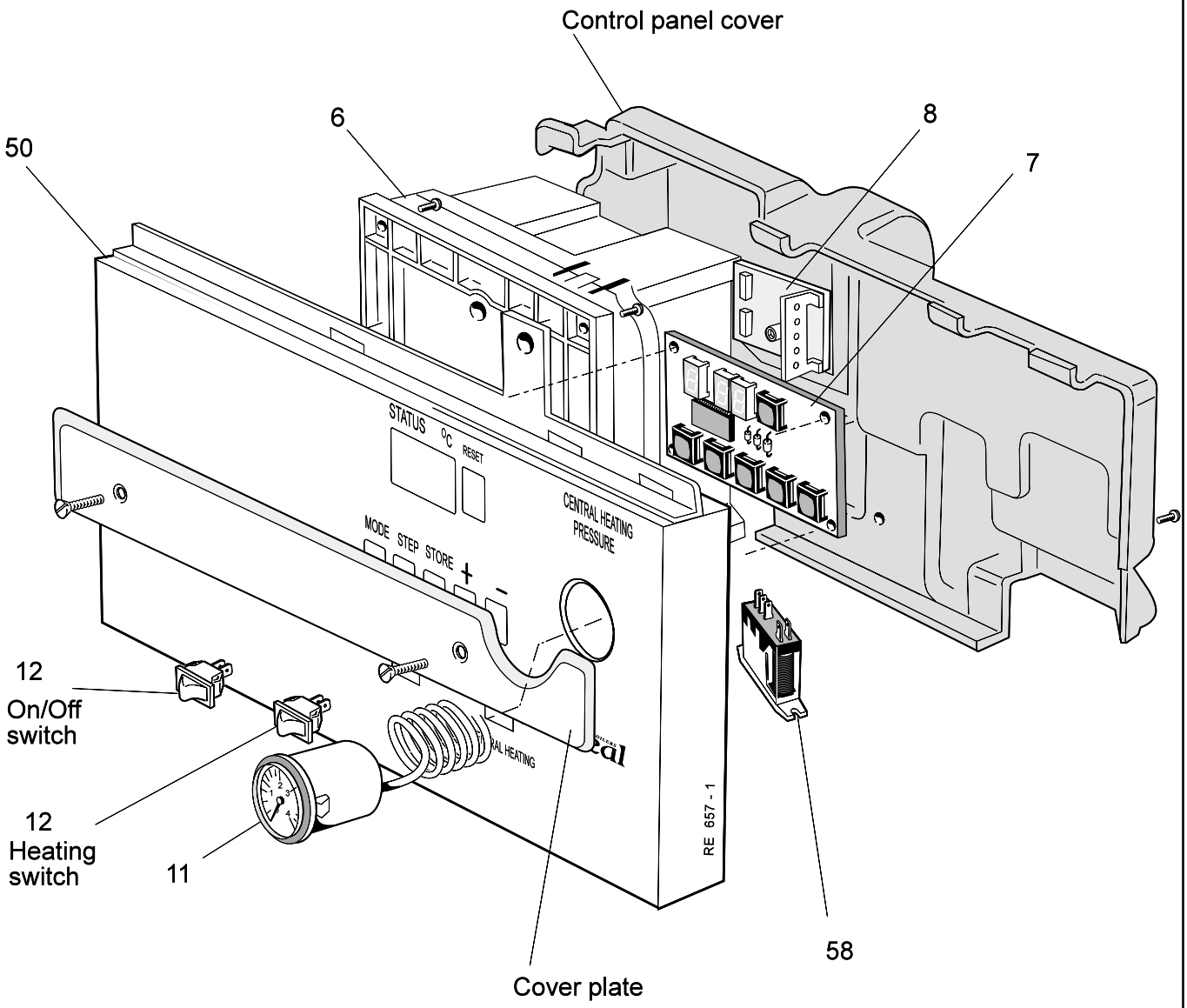

89 BOILER CASING ASSEMBLY

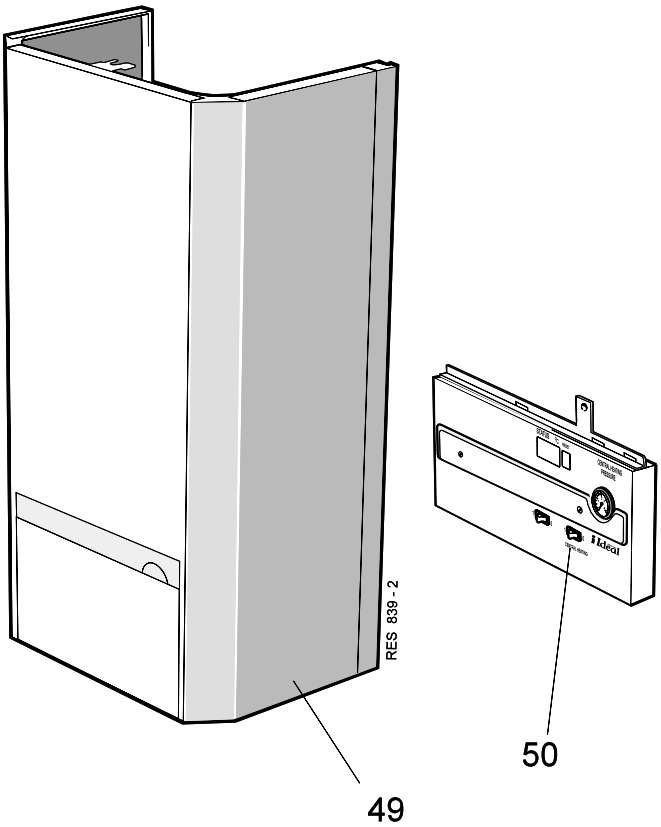

benchmark™

The code of practice for the installation, commissioning & servicing of central heating systems

Technical Training

The Caradon Plumbing Limited Technical Training Centre offers a series of first class training courses for domestic, commercial and industrial heating installers, engineers and system specifiers.

For details of courses please ring: *01482 498432*

Caradon Plumbing Limited, P.O. Box 103, National Ave, Kingston upon Hull, HU5 4JN. Telephone: 01482 492 251 Fax: 01482 448 858. Registration No. London 322 137. Registered Office: National Avenue, Kingston upon Hull, HU5 4JN. *A subsidiary of Caradon p.l.c*

CE

Caradon Plumbing Limited pursues a policy of continuing improvement in the design and performance of its products. The right is therefore reserved to vary specification without notice.

July 2000 151415 A06

Ideal BOILERS

Ideal Installer/Technical Helpline: 01482 498663

YOUR FEEDBACK

AND YOUR CHANCE TO WIN A FREE BOILER

At Ideal we've been leaders in the design and engineering of robust and reliable boilers for over 90 years. We want to continue as leaders by listening to your suggestions for how to improve our boilers and our service. We will be giving away a free boiler for the five best ideas every year (to be selected by our Technical Director). Please complete this form, using extra sheets if required, and post it or fax it to us on 01482 498699.

Boiler details

Model / Size *(e.g. Classic RS 230, Mexico CF 3/60 etc. Details on control panel door)*

Date of Installation

Installer details

Name

Address

Post Code

Telephone (*Please include STD code*)

How I would improve this boiler:

My general comments for Ideal:

Caradon Plumbing Solutions

Ideal Installer/Technical Helpline: 01482 498663

Further information

If you would like information about Ideal Boilers please complete this sheet and fax it to us on 01482 498699 or post it to Caradon Plumbing Limited, PO Box 103, National Avenue, Kingston upon Hull, HU5 4JN.

Installer details

Name

Address

Post Code

Telephone (*Please include STD code*)

General information required

- ☐ *Please send me details of Ideal Training Courses.*
- ☐ *Please arrange for a technical representative to contact me.*
- ☐ *Please arrange for me to join an Ideal factory tour.*

Range guides required

- ☐ *The Ideal Guide: a specifier's and installer's introduction to the Ideal domestic boiler range.*
- ☐ *The Ideal Householders Guide: to assist the installer when presenting to his/her customers.*

Technical manuals required

- ☐ *The Ideal C class combi boiler*
- ☐ *The Ideal Classic wall hung boiler*
- ☐ *The Ideal Classic System wall hung boiler*
- ☐ *The Ideal Classic LX Deluxe wall hung boiler*
- ☐ *The Ideal Mexico floor standing boiler*
- ☐ *The Ideal Minimiser heat-saving boiler*
- ☐ *The Ideal Response combi boiler*
- ☐ *The Ideal Response SE super efficiency combi boiler*
- ☐ *The Ideal Systemiser SE super efficiency system boiler*
- ☐ *The Ideal Concord high output boiler*
- ☐ *The Ideal Buccaneer oil fired boiler*

Caradon
Plumbing Solutions

Caradon Plumbing Ltd., PO Box 103, National Avenue, Kingston upon Hull, HU5 4JN. Telephone: 01482 492251 Fax: 01482 448858.

Ideal Installer/Technical Helpline: 01482 498663

UIN 151 415 A0