installation and servicing

PACKAGED BOILER CONTENTS HAVE BEEN CHECKED BY OPERATOR No.....	

istor

(V3 Flue System)

Your Ideal installation and servicing guide

For details of document amendments, refer to page 3

HE260, HE325

When replacing any part on this appliance, use only spare parts that you can be assured conform to the safety and performance specification that we require. Do not use reconditioned or copy parts that have not been clearly authorised by Ideal Boilers.

January 2010 UIN 203325 A04

For the very latest copy of literature for specification purposes please visit our website www.idealboilers.com where you will be able to download the relevant information in pdf format.

Ideal BOILERS
The High Efficiency Pioneers

DOCUMENT AMENDMENTS

Relevant Installation changes implemented in this book from Mod Level ..... A03 to A04 (Jan 2010)

Pipework layout changes to tank module & various other changes throughout book.

GENERAL

Table 1 - General Data

Boiler size		istor HE260	istor HE325
Gas supply		2H - G20 - 20mbar	
Gas Supply Connection		Rc 1/2 (1/2" BSP female)	
Injector size		Stereomatic 5.6mm dia.	
Inlet Connection	Domestic Hot Water	22mm copper	
Outlet Connection	Domestic Hot Water	22mm copper	
Flow Connection	Central Heating	22mm copper	
Return Connection	Central Heating	22mm copper	
Flue Terminal Diameter	mm (in)	100 (4)	
Average flue temp/mass flow rate	(DHW)	74°C / 20.3g/s	
Maximum Working Pressure (Sealed Systems)	bar (lb/in²)	2.5 (36.3)	
Maximum Domestic Hot Water Inlet Pressure	bar (lb/in²)	10.0 (145)	
Minimum Domestic Hot Water Inlet Pressure	bar (lb/in²)	0.5 (7)	
Maximum Domestic Hot Water Outlet Pressure	bar (lb/in²)	2.0 (29)	
Temperature & Pressure relief valve		Preset 95°C / 4.0 Bar opening	
Electrical Supply / Power consumption		230 V ~ 50 Hz. / 148 W	
Fuse Rating		External : 3A	Internal : 3.15A TL250 V
Water content	Central Heating litre (gal)	2.0 (.44)	
	Domestic Hot Water	80 litre	120 litre
Packaged Weight - Boiler box	kg (lb)	58.5 (129)	58.5 (129)
Packaged Weight - Tank box	kg (lb)	66 (145)	73 (161)
Maximum Installation Weight -Boiler box	kg (lb)	55 (121)	55 (121)
Maximum Installation Weight -Tank box	kg (lb)	59 (130)	65 (143)
Boiler Casing Size	Height mm (in)	1400 (55)	1600 (63)
	Width mm (in)	560 (22)	560 (22)
	Depth mm (in)	600 (23.6)	600 (23.6)
Potable water components on tank module			
Pressure reducing valve		preset to 2 bar	
Thermostatic mixer		max inlet temp 85° C/max pressure 14 bar	
Pressure and temp relief valve on cylinder		90°C and 4 bar	
Pressure relief valve on inlet manifold		3 bar	
DHW expansion vessel		19 litres, precharged to 2 bar	

Table 2 - Performance Data - Central Heating

Boiler Input :		Max.	Min.
Nett CV	kW	24.4	9.1
	(Btu/h)	(83 300)	(31 000)
Gross CV	kW	27.1	10.1
	(Btu/h)	(92 500)	(34 400)
Gas Consumption	l/s	0.70	0.26
	(ft³/h)	(89.1)	(33.2)
Boiler Output :			
Non Condensing	kW	23.4	8.8
	(Btu/h)	(80 000)	(30 000)
Condensing	kW	25.1	9.6
	(Btu/h)	(83 700)	(32 800)
Seasonal efficiency (SEDBUK)*		Band A [90.1]%	
NOx Classification		Class 5	

Table 3 - Performance Data - Domestic Hot Water

Maximum DHW Input :	Nett CV	kW	30.2	
		(Btu/h)	(103 100)	
	Gross CV	kW	33.5	
		(Btu/h)	(114 300)	
	Gas Consumption	l/s	0.87	
		(ft³/h)	(110)	
Maximum DHW Output		kW	29.3	
		(Btu/h)	(100 000)	
DHW Storage Temp			70°C	
DHW Delivery Temp	Factory set		60°C	
Variable on Installation only			45°C-65°C	
DHW Flow Rate			HE260	HE325
(Practical maximum assuming suitable mains supply)		l/min	35	35
DHW Recovery from 15°C		min.	14	20
After 70% draw off		min.	9	12

* The value is used in the UK Government's Standard Assessment Procedure (SAP) for energy rating of dwellings. The test data from which it has been calculated have been certified by a notified body.

Note. *Gas consumption is calculated using a calorific value of 38.7 MJ/m³ (1038 Btu/ft³) gross or 34.9 MJ/m³ (935 Btu/ft³) nett*

To obtain the gas consumption at a different calorific value:

a. ***For l/s** - divide the gross heat input (kW) by the gross C.V. of the gas (MJ/m³)*

b. ***For ft³/h** - divide the gross heat input (Btu/h) by the gross C.V. of the gas (Btu/ft³)*

Key to symbols

IE = Ireland, **GB** = United Kingdom (Countries of destination)

PMS = Maximum operating pressure of water

C_{13} C_{33} C_{53} = A room sealed appliance designed for connection via ducts to a horizontal or vertical terminal, which admits fresh air to the burner and discharges the products of combustion to the outside through orifices which, in this case, are concentric. The fan is up stream of the combustion chamber.

I_{2H} = An appliance designed for use on 2nd Family gas, Group H only.

CAUTION. To avoid the possibility of injury during the installation, servicing or cleaning of this appliance, care should be taken when handling edges of sheet steel components.

istor

Natural Gas only

Boiler size	G.C. Appliance No. (Benchmark No.)	PI No.
HE260	41-394-13	87 BP 34
HE325	41-394-14	87 BP 34

Destination Countries: UK, IE

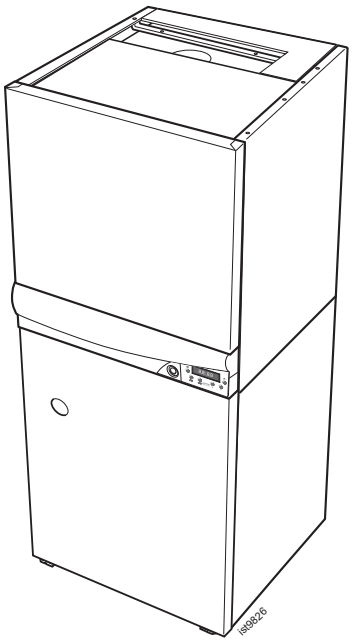

CONTENTS

Air Supply 10
Benchmark Commissioning Checklist 74
Boiler Clearances 8
Boiler Exploded Diagram 15,16,17
Condensate Drain 10,22,23
Electrical Connections 36
Electrical Supply 10
Extension Ducts - Fitting 30
Fault Finding 65-69
Flow Wiring Diagram 39
Flue Installation 26-34
Gas Safety Regulations 7
Gas Supply 9
Installation 16-42
Mandatory Requirements 7-15
Pump 60
Safe Handling 6
Servicing 43-64
Short List of Parts 70
Thermostatic Radiator valves 10
Water and Systems 12-15
Water Connections 19-20
Water Treatment 15
Wiring Diagrams 36-39

For GB, to comply with Building Regulations Part L1 (Part 6 in Scotland) the boiler should be fitted in accordance with the manufacturer's instructions. Self-certification that the boiler has been installed to comply with Building Regulations can be demonstrated by completing and signing the Benchmark Commissioning Checklist.

Before installing this boiler read the Code of Practice sheet at the rear of this book.

BENCHMARK COMMISSIONING CHECKLIST DETAILS

Boiler — **Page**

Make and model 5
Appliance serial no. on data badge ..... Front Cover
SEDBUK No. % 4

Controls

Time and temperature control to heating 37
Time and temperature control to hot water 37
Heating zone valves ..... n/a
TRV's 10
Auto bypass 10
Boiler interlock 10

For all boilers

Flushing to BS.7593 15
Inhibitor 15

Central heating mode

Heat input ..... to be calculated

Page

Burner operating pressure ..... measure and record
Central heating flow temp. ..... measure and record
Central heating return temp. ... measure and record

For combination boilers only

Scale reducer ..... n/a

Hot water mode

Heat input ..... n/a
Max. operating burner pressure ..... n/a
Max. operating water pressure ..... n/a
Cold water inlet temp ..... n/a
Hot water outlet temp. ..... n/a
Water flow rate at max. setting ..... n/a

For condensing boilers only

Condensate drain 22

For all boilers: *complete, sign & hand over to customer*

For assistance see Technical Helpline on the back page

NOTE TO THE INSTALLER: COMPLETE THE BENCHMARK COMMISSIONING CHECKLIST AND LEAVE THESE INSTRUCTIONS WITH APPLIANCE

benchmark
COLLECTIVE MARK
THE MARK OF QUALITY FOR THE INSTALLATION, COMMISSIONING AND SERVICING OF DOMESTIC HEATING AND HOT WATER SYSTEMS

INTRODUCTION

The istor HE260 & HE325 boilers are a fully automatically controlled, condensing, system store, fanned flue, gas boiler.

Note. *Due to the high efficiency of the boiler a plume of water vapour will form at the terminal during operation.*

Central heating (CH) output is fully modulating with a range of:

8.8 to 23.4kW (30,000 to 80,000 Btu/h)

Domestic hot water (DHW) output to the cylinder is also fully modulating with a maximum of:

29.3kW (100,000 Btu/h)

The boiler is supplied fully assembled with an unvented DHW cylinder, diverter valve, circulating pump, CH & DHW expansion vessels, pressure gauge, safety valves, thermostatic mixer valve. A pressure reducing valve is supplied for fitting externally to the boiler.

Variable CH temperature control is fitted on the user control.

A programmer is fitted as standard and may be remotely monitored away from the boiler using remote monitoring kit.

The boiler casing is of white painted zintec coated mild steel.

The boiler temperature controls are visible at the middle RHS of the front panel.

The heat exchanger is of cast aluminium.

The DHW cylinder is made of copper with a rapid recovery coil and produces mains pressure hot water to a maximum pressure of 2 bar.

The system pipework MUST include drain cocks in appropriate places. A pre-piping frame is provided with the boiler which allows pipework to be made to the boiler before installation of the tank module and boiler module.

Note. *Prior to installation this appliance must be stored in a dry, upright condition.*
Due note should be taken of the carton labelling when handling this appliance.

OPERATION

With no demand for CH the boiler fires only when DHW is drawn off, or periodically for a few seconds without any DHW draw-off, in order to maintain the DHW cylinder in a heated condition.

When there is a demand for CH, the heating system is supplied at the selected temperature of between 30 °C and 82 °C, until DHW is drawn off. The full output from the boiler is then directed via the diverter valve to the cylinder coil to satisfy the cylinder store temperature of 70°C.

DHW temperature is controlled to a factory set 60°C via a thermostat mixer valve. This is adjustable on installation.

The boiler features a comprehensive diagnostic system which gives detailed information on the boiler status when operating, and performance of key components to aid commissioning and fault finding.

SAFE HANDLING

This boiler may require 2 or more operatives to move it to its installation site, remove it from its packaging base and during movement into its installation location. Manoeuvring the boiler may include the use of a sack truck and involve lifting, pushing and pulling.

Caution should be exercised during these operations.

Operatives should be knowledgeable in handling techniques when performing these tasks and the following precautions should be considered:

- Grip the boiler at the base.
- Be physically capable.
- Use PPE as appropriate, e.g. gloves, safety footwear.

During all manoeuvres and handling actions, every attempt should be made to ensure the following unless unavoidable and/or the weight is light.

1 BOILER WATER CIRCUIT DIAGRAMS

CENTRAL HEATING CIRCUIT

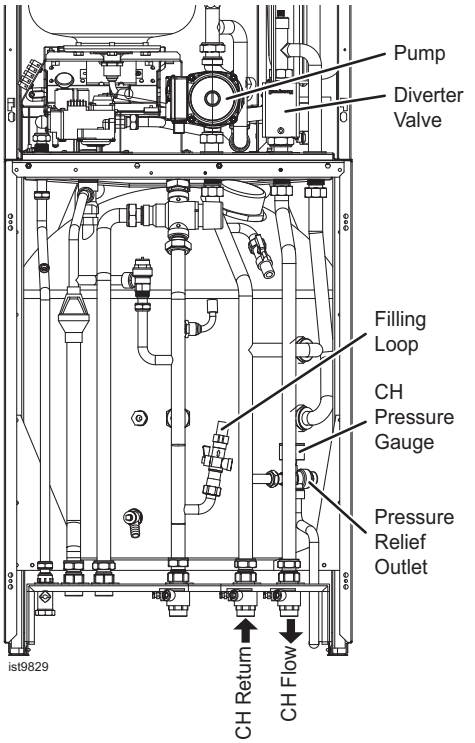

DOMESTIC HOT WATER CIRCUIT

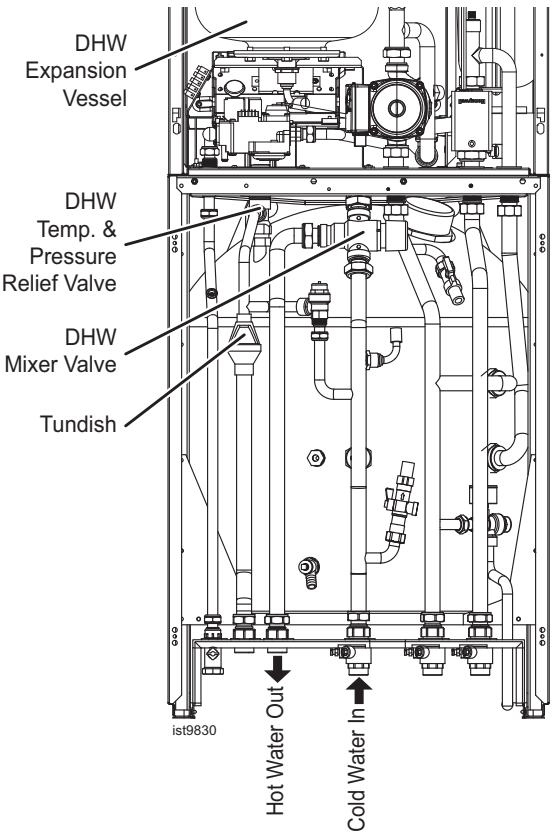

- Keep back straight.
- Avoid twisting at the waist.
- Avoid upper body/top heavy bending.
- Always grip with the palm of the hand.
- Use designated hand holds.
- Keep load as close to the body as possible.
- Always use assistance if required.

OPTIONAL EXTRA KITS

- **Flue Kits (for more details see page 11)**
- **Condensate pump Kit**
- **90° Elbow Kit (max 4 elbows/ installation)**
- **45° Elbow Kit (max 4 elbows/ installation)**
- **Concentric Flue Screw Retaining Kit**
- **Remote User controls (for remote monitoring of programmer)**
- **Horizontal Flue Kit. 600mm long**
- **High Level Flue Kit**
- **Pre-piping Frame Kit**
- **Adjustable flue support bracket**

SAFETY

Installation of this boiler as an unvented hot water system falls within the scope of the Building Regulations 1995 (Part G). These require that installation of an 'unvented' system shall be notified to the local authority Building Control Department: also that the work must be carried out by a competent person as defined in the Approved Document G3.

Current Gas Safety (installation and use) regulations or rules in force:

The appliance is suitable only for installation in GB and IE and should be installed in accordance with the rules in force.

In GB, the installation must be carried out by a Gas Safe Registered Engineer. It must be carried out in accordance with the relevant requirements of the:

- Gas Safety (Installation and Use) Regulations
- The appropriate Building Regulations either The Building Regulations, The Building Regulations (Scotland), Building Regulations (northern Ireland).
- The Water Fittings Regulations or Water byelaws in Scotland.
- The Current I.E.E. Wiring Regulations.

Where no specific instructions are given, reference should be made to the relevant British Standard Code of Practice.

In IE, the installation must be carried out by a Registered Gas Installer (RGII) and installed in accordance with the current edition of I.S.813 "Domestic Gas Installations", the current Building Regulations and reference should be made to the current ETCI rules for electrical installation.

Detailed recommendations are contained in the following British Standard Codes of Practice:

BS. 5440:1	Flues (for gas appliances of rated input not exceeding 70 kW).
BS. 5440:2	Ventilation (for gas appliances of rated input not exceeding 70 kW).
BS. 5449	Forced circulation hot water systems.
BS. 5546	Installation of gas hot water supplies for domestic purposes (2nd Family Gases)
BS. 6798	Installation of gas fired hot water boilers of rated input not exceeding 60 kW.
BS. 6891	Low pressure installation pipes.

Health & Safety Document No. 635.

The Electricity at Work Regulations, 1989.

The manufacturer's notes must NOT be taken, in any way, as overriding statutory obligations.

IMPORTANT. These appliances are CE certificated for safety and performance. It is, therefore, important that no external control devices, e.g. flue dampers, economisers etc., are directly connected to these appliances unless covered by these Installation and Servicing Instructions or as otherwise recommended by **Ideal Stelrad Group** in writing. If in doubt please enquire.

Any direct connection of a control device not approved by **Ideal Stelrad Group** could invalidate the certification and the normal appliance warranty. It could also infringe the Gas Safety Regulations and the above regulations.

SAFE HANDLING OF SUBSTANCES

Care should be taken when handling the boiler insulation panels, which can cause irritation to the skin. No asbestos, mercury or CFCs are included in any part of the boiler or its manufacture.

LOCATION OF BOILER AND FLUE OUTLET

The boiler is floor mounted. The floor must be capable of adequately supporting the weight of the boiler and any ancillary equipment.

The boiler may be fitted on a combustible floor and insulation between the floor and the boiler is not necessary, unless required by the local authority.

For electrical safety reasons there must be no access available from the back of the boiler.

The boiler must not be fitted outside.

Timber Framed Buildings
If the boiler is to be fitted in a timber framed building it should be fitted in accordance with the Institute of Gas Engineering document IGE/UP/7:1998.

Where installation will be in an unusual location, special procedures may be necessary and BS 6798 gives detailed guidance on this aspect.

Compartment Installations

A compartment used to enclose the boiler should be designed and constructed specially for this purpose.

An existing cupboard or compartment may be used, provided that it is modified for the purpose.

In both cases, details of essential features of cupboard / compartment design, including airing cupboard installation, are to conform to the following:

- BS 6798 (No cupboard ventilation is required - see air supply for details).
- The position selected for installation MUST allow adequate space for servicing in front of the boiler.
- For the minimum clearances required for safety and subsequent service, see Frame 2. In addition, sufficient space may be required to allow lifting access for the boiler module.

2 BOILER DIMENSIONS, SERVICES & CLEARANCES *all dimensions in mm (in)*

The boiler connections are made on the boiler piping frame. Refer to Frame 23.

The following minimum clearances must be maintained for operation and servicing.

Additional space will be required for installation, depending upon site conditions.

Side and Rear Flue

a Provided that the flue hole is cut accurately, e.g. with a core drill, the flue can be installed from inside the building where wall thicknesses do not exceed 600mm (24"). Where the space into which the boiler is going to be installed is less than the length of flue required the flue must be fitted from the outside.

Installation from inside ONLY

b. If a core boring tool is to be used inside the building the space in which the boiler is to be installed must be at least wide enough to accommodate the tool.

Front clearance

The minimum front clearance when built in to a cupboard is 5mm (1/4") from the cupboard door but 450mm (17 3/4") overall clearance is still required, with the cupboard door open, to allow for servicing.

If fitted to minimum clearances, the following dimensions apply:

Boiler		HE260	HE325
LH Flue Dim A	mm	1477	1677
RH Flue Dim B	mm	1480	1680
Rear Flue Dim C	mm	1476	1676

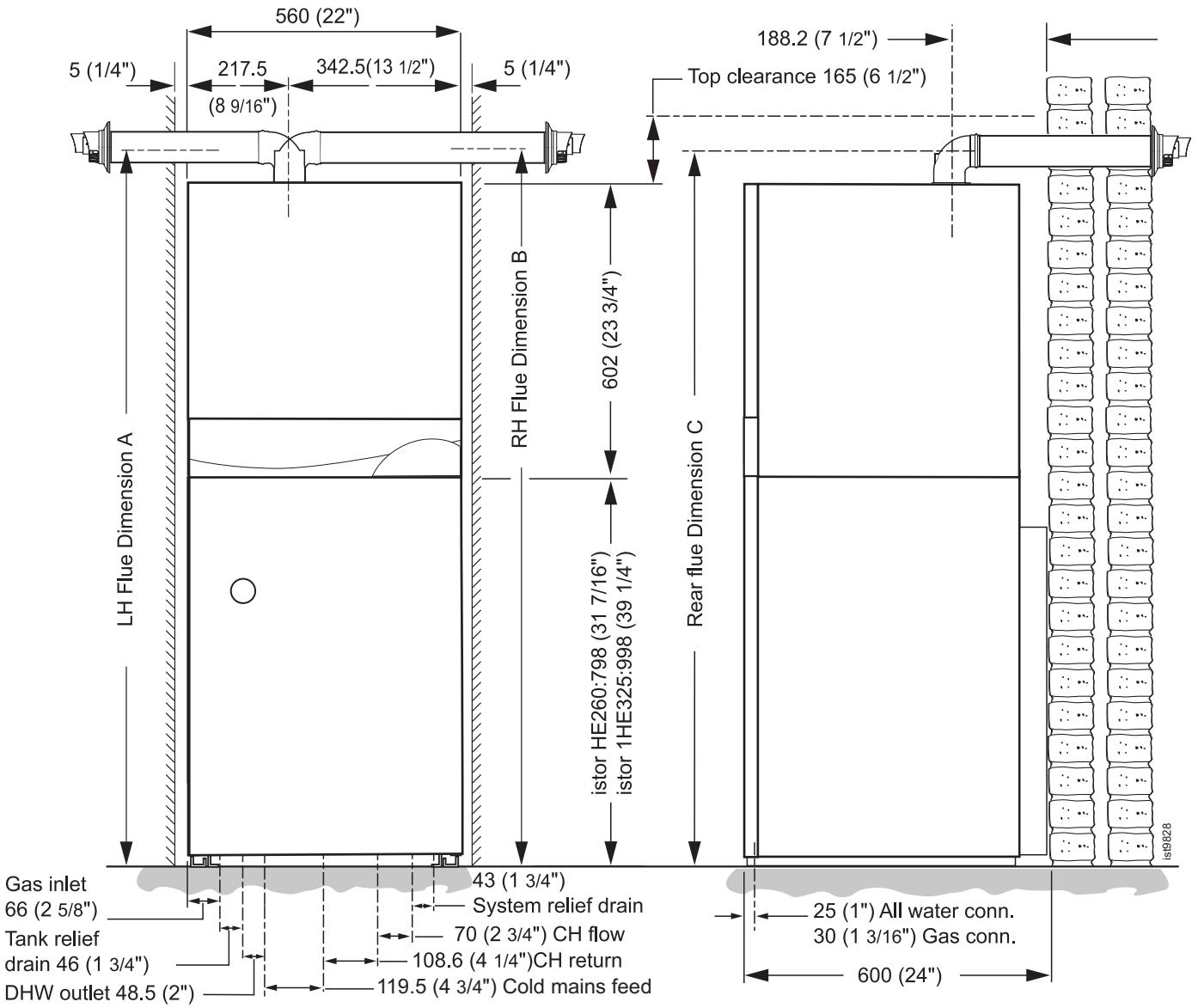

GAS SUPPLY

The local gas supplier should be consulted, at the installation planning stage, in order to establish the availability of an adequate supply of gas. An existing service pipe must NOT be used without prior consultation with the local gas supplier.

The boiler MUST be installed on a gas supply with a governed meter only.

A gas meter can only be connected by the local gas supplier or by a Gas Safe Registered Engineer. In IE by a Registered Gas Installer (RGII).

An existing meter should be checked, preferably by the gas supplier, to ensure that the meter is adequate to deal with the rate of gas supply required.

It is the responsibility of the Gas Installer to size the gas installation pipework in accordance with BS6891:2005. Whilst the principle of the 1:1 gas valve ensures the istor range is able to deliver it's full output at inlet pressures as low as 14mb, other gas appliances in the property may not be as tolerant. When operating pressures are found to be below the minimum meter outlet of 19mb these should be checked to ensure this is adequate for correct and safe operation.

Allowing for the acceptable pressure loss of 1mb across the installation pipework, it can be assumed that a minimum permitted operating pressure of 18mb will be delivered to the inlet of the appliance. (Reference BS 6400-1 Clause 6.2 Pressure Absorption).

The integral appliance isolation valve and boiler pipework could further reduce the operating pressure by up to 1.5mb when measured at the inlet test point on the appliance gas valve. Therefore it has been identified that an operating pressure as low as 16.5mbar could be measured at the appliance inlet pressure test point on the gas valve.

IMPORTANT.
Installation pipes must be fitted in accordance with BS.6891. In IE refer to IS.813:2002. Pipework from the meter to the boiler MUST be of an adequate size.

The complete installation MUST be tested for gas tightness and purged as described in the above code.

FLUE INSTALLATION

Pluming will occur at the terminal so terminal positions where this could cause a nuisance should be avoided.

The flue must be installed in accordance with the recommendations of BS. 5440-1: 2000. In IE refer to I.S. 813:2002.
Do not use pipes of a smaller size than the boiler inlet gas connection.

The following notes are intended for general guidance:

1. The boiler MUST be installed so that the terminal is exposed to external air.
2. It is important that the position of the terminal allows the free passage of air across it at all times.
3. Minimum acceptable spacing from the terminal to obstructions and ventilation openings are specified in Table 4.
4. Where the lowest part of the terminal is fitted less than 2m (6'6") above a balcony, above ground or above a flat roof to which people have access then the terminal MUST be protected by a purpose designed guard.

   Terminals guards are available from boiler suppliers. In case of difficulty seek advice from:

   Grasslin (UK) Ltd.,
   Tower House, Vale Rise, Tonbridge, Kent TN9 1TB
   Tel. +44 (0)1732 359888 / Fax. +44 (0) 1732 354445
   www.tfc-group.co.uk

   Ensure that the guard is fitted centrally.

Table 4 - Balanced Flue Terminal Position

Flue Terminal Positions	Min. Spacing*
1. Directly below or alongside an opening window, air vent or other ventilation opening.	300mm (12")
2. Below guttering, drain pipes or soil pipes. *BS5440-1 2000*	25mm (1")* *75mm (3")*
3. Below eaves. *BS5440-1 2000*	25mm (1")* *200mm (8")*
4. Below balconies or a car port roof. *BS5440-1 2000*	25mm (1")* *200mm (8")*
5. From vertical drain pipes or soil pipes. *BS5440-1 2000*	25mm (1")* *150mm (6")*
6. From an internal or external corner or to a boundary along side the terminal. *BS5440-1 2000*	25mm (1")* *300mm (12")*
7. Above adjacent ground, roof or balcony level.	300mm (12")
8. From a surface or a boundary facing the terminal.	600mm (24")
9. From a terminal facing a terminal.	1,200mm (48")
10. From an opening in a car port (e.g. door or window) into dwelling.	1,200mm (48")
11. Vertically from a terminal on the same wall.	1,500mm (60")
12. Horizontally from a terminal on the wall.	300mm (12")
Vertical Terminals	
13. Above the roof pitch with roof slope of all angles. Above flat roof.	300mm (12") 300mm (12")
14. From a single wall face. From corner walls	300mm (12") 300mm (12")
15. Below velux window	2000mm (79")
16. Above or side of velux window	600mm (24")

** Only one reduction down to 25mm is allowable per installation otherwise BS5440-1 2000 dimensions must be followed.*

For RH Side Flues

- If the appliance is installed at minimum clearance from a standard cavity wall the horizontal flue kit (600mm long) is required.
- If the telescopic flue kit is used, an additional 'D' Pack Extension will be needed.

For LH Side and Rear Flues

- For minimum clearance from standard cavity wall the telescopic flue kit only is required.

5. Where the terminal is fitted within 850mm (34") of a plastic or painted gutter or 450mm (18") of painted eaves then an aluminium shield at least 750mm (30") long should be fitted to the underside of the gutter or painted surface fitted centrally above the flue.
6. The air inlet/products outlet duct and the terminal of the boiler MUST NOT be closer than 25mm (1") to combustible material. Detailed recommendations on the protection of combustible material are given in BS. 5440: Part 1, 2000. In IE refer to IS 813:2002.

IMPORTANT. It is absolutely essential to ensure, in practice, that products of combustion discharging from the terminal cannot re-enter the building or any other adjacent building through ventilators, windows, doors, other sources of natural air infiltration, or forced ventilation / air conditioning.

If this should occur the appliance MUST be turned OFF, labelled as 'unsafe' until corrective action can be taken.

TERMINAL

The terminal assembly can be adapted to accommodate various wall thicknesses. Refer to Frame 26.

AIR SUPPLY

It is NOT necessary to have a purpose-provided air vent in the room or internal space in which the boiler is installed. Neither is it necessary to ventilate a cupboard or compartment in which the boiler is installed, due to the low surface temperatures of the boiler casing during operation; therefore the requirements of BS 6798, Clause 12, and BS 5440:2 may be disregarded. In IE the requirement of IS 813:2002 may be disregarded.

WATER CIRCULATION SYSTEM

The central heating system should be in accordance with BS. 6798 and, in addition, for smallbore and microbore systems, BS. 5449.

Draining taps MUST be located in accessible positions, which permit the draining of the whole system. They should be at least 1/2" BSP nominal size and be in accordance with BS 2879.

WATER TREATMENT - see Frame 9

THERMOSTATIC RADIATOR VALVES (TRV)

Ideal Stelrad Group recommend that heating systems utilising full thermostatic radiator valve control of temperature in individual rooms should also be fitted with a room thermostat controlling the temperature in a space served by radiators not fitted with such a valve as stated in BS. 5449.

When thermostatic radiator valves are used, the space heating temperature control over a living area having a heating requirement of at least 0.9kW (3000Btu/h) of the boiler heat output should be achieved using a room thermostat whilst other rooms are individually controlled by thermostatic radiator valves. A higher proportion of TRVs may be used, provided that a bypass between the boiler flow and return is fitted, to ensure adequate flow when all TRVs are closed - however this is NOT recommended as a large proportion of TRVs can restrict water circulation and inhibit the condensing mode of condensing boilers, reducing fuel economy.

For further information refer to the 'Good Practice Guide 143', a publication of the Energy Efficiency Office, available from the Building Research Establishment, Garston, Watford WD2 7JR. Tel: +44 (0) 1923 664258.

ELECTRICAL SUPPLY

WARNING. This appliance MUST be earthed,

Wiring external to the appliance MUST be in accordance with the current I.E.E. (BS.7671) Wiring Regulations and any local regulations which apply. For IE reference should be made to the current ETCI rule for electrical installations.

The point of connection to the mains should be readily accessible and adjacent to the boiler.

Note. The fan voltage is 325V DC.

CONDENSATE DRAIN - Refer to Frame 19

A condensate drain is provided on the boiler. This drain must be connected to a drainage point on site. All pipework and fittings in the condensate drainage system MUST be made of plastic - *no other materials may be used.*

IMPORTANT.

Any external runs must be insulated

The drain outlet on the boiler is standard 3/4in (21.5mm) overflow pipe.

3 FLUING OPTIONS

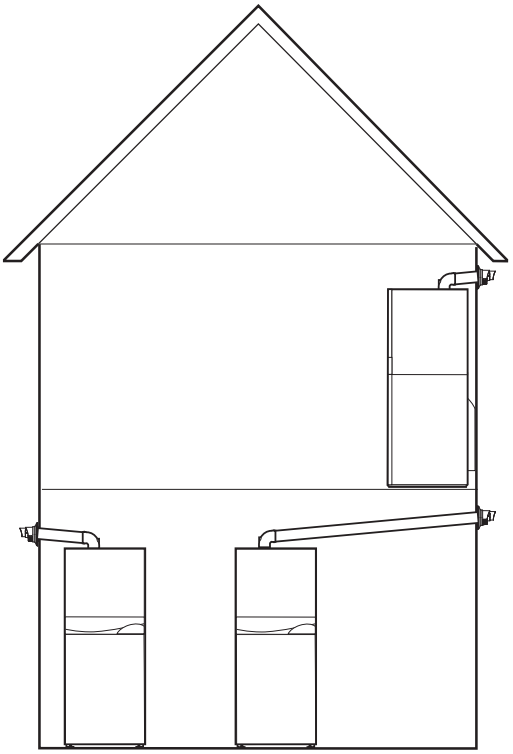

100mm Concentric flue
(to maximum flue length of 6m)

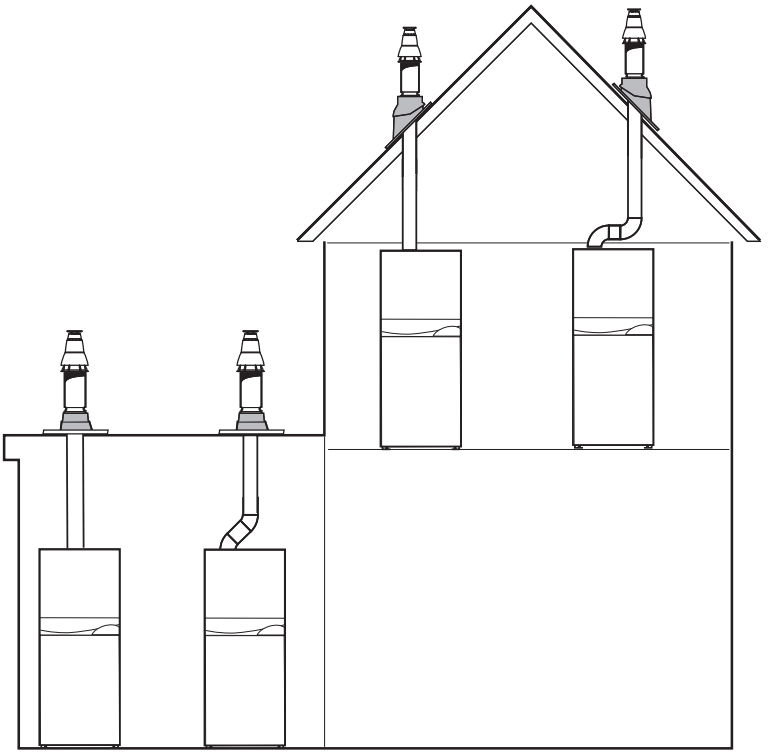

Roof flue kit (to a maximum of 7.5m)

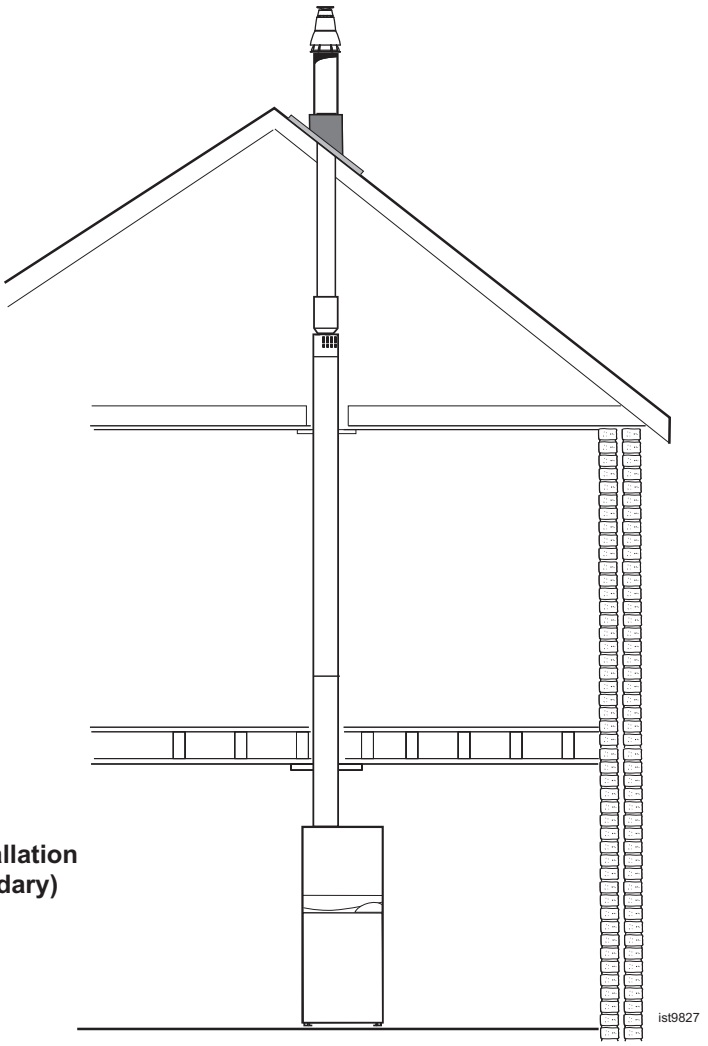

Powered Vertical Flue Kit (typical installation maximum 5m primary with 17m secondary)
For detailed maximums refer to
Powered Vertical Kit Instructions.

4 SYSTEM REQUIREMENTS - Central Heating

Notes

a. *The method of filling, refilling, topping up or flushing sealed primary hot water circuits from the mains via a temporary hose connection is only allowed if acceptable to the local water authority.*

b. *Antifreeze fluid, corrosion and scale inhibitor fluids suitable for use with boilers having aluminium heat exchangers may be used in the central heating system.*

Advice should be sought from a local water treatment company.

Safety valve setting	bar	3.0	
Vessel charge pressure	bar	0.5 to 0.75	
System pre-charge pressure	bar	None	1.0
System volume (litres)		**Expansion vessel volume (litres)**	
25		1.6	1.8
50		3.1	3.7
75		4.7	5.5
100		6.3	7.4
125		7.8	9.2
150		9.4	11.0
175		10.9	12.9
190		11.9	14.0
200		12.5	14.7
250		15.6	18.4
300		18.8	22.1
For other system volumes multiply by the factor across		0.063	0.074

General

1. The installation must comply with all relevant national and local regulations.
2. The installation should be designed to work with flow temperatures of up to 82 °C.
3. All components of the system must be suitable for a working pressure of 3 bar and temperature of 110 °C. Extra care should be taken in making all connections so that the risk of leakage is minimised.

   The following components are incorporated within the appliance for the central heating:

   a. Circulating pump.
   b. Safety valve, with a non-adjustable preset lift pressure of 3 bar.
   c. Pressure gauge, covering a range of 0 to 6 bar.
   d. A 8-litre expansion vessel, with an initial charge pressure of 1.0 bar.
   e. Diverter valve.
   f. Filling loop.
4. **'Make-up' Water.** Provision is made for replacing water loss from the system, via a filling loop supplied and fitted to the appliance.

   Note.

   The maximum cold water capacity of the system should not exceed 143 litres, if not pressurized. However, if the system is to be pressurized, the efficiency of the expansion vessel will be reduced and a larger vessel (or smaller system volume) may be necessary. If the capacity of the vessel is not considered sufficient for this, or for any other reason, an additional vessel MUST be installed on the return to the boiler.

   Guidance on vessel sizing is given above.
5. **Filling.** The system should be filled by the following method:

   a. Through the filling loop fitted to the appliance. Connecting the inlet manifold to the CH return.
   - **i.** Thoroughly flush out the whole system with cold water.
   - **ii.** Fill and vent the system until the pressure gauge registers 1.5 bar, and examine for leaks.
   - **iii.** Check the operation of the safety valve by raising the water pressure until the valve lifts. This should occur within 0.3 bar of the preset lift pressure.
   - **iv.** Release water from the system until the minimum system design pressure is reached; 1.0 bar if the system is to be pre-pressurised.

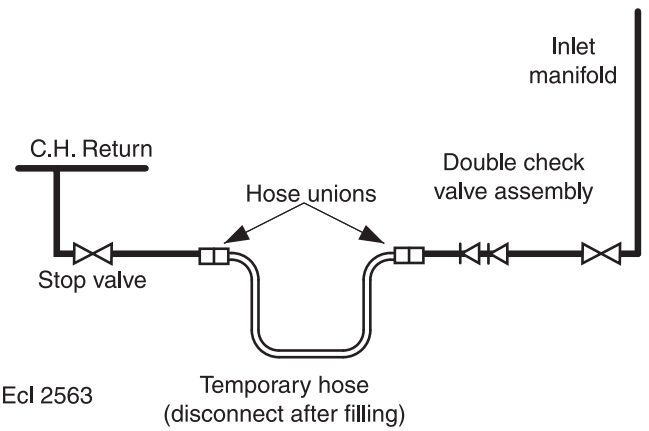

Ecl 2563

Water Flow Rate and Pressure Loss

Max CH Output	kW	23.4
	(Btu/h)	(80 000)
Water flow rate	l/sec	0.37
	(gal/min)	4.8
Temperature Differential	°C	15
	(°F)	(27)
Head available for	m.w.g.	2.3
system pump.	(ft.w.g.)	7.5

5 SYSTEM REQUIREMENTS - Domestic Hot Water

Domestic Hot Water Requirements (see note in Frame 14).

1. The domestic hot water service must be in accordance with BS 5546 and BS 6700.
2. Refer to Table 1 for minimum and maximum working pressures.
3. The boilers are suitable for connection to most types of washing machine and dishwasher appliances.
4. When connecting to suitable showers, ensure that:
   a. The cold inlet to the boiler is fitted with an approved anti-vacuum or syphon non-return valve.
   b. Hot and cold water supplies to the shower are of equal pressure.
5. **Hard Water Areas**
   Where the water hardness exceeds 200mg/litre, it is recommended that a proprietary scale reducing device is fitted into the boiler cold supply within the requirements of the local water company.

Note.
Attention is drawn to the following extracts from the Building Regulations 1991.
Regulation 11(1) (Giving of a building notice or deposit of plans)
"Subject to the following provisions of this regulation, a person who intends to carry out building work or to make a material change of use shall:

a. Give to the local authority* a building notice in accordance with 12; or
b. Deposit full plans with the local authority* in accordance with regulation 13".

Regulation 12(4) (Particulars and plans where a building notice is given)
".....a building notice shall be accompanied by a statement which specifies:
*Attention is drawn to regulation 18 (supervision of building work otherwise than by local authorities).

a. The name, make, model and type of hot water storage system to be installed;
b. The name of the body, if any, which has approved or certified that the system is capable of performing in a way which satisfies the requirements of paragraph G3 of Schedule 1;
c. The name of the body, if any, which has issued any current registered operative identity card to the installer or proposed installer of system."

Regulation 13(3) (Full plans)
"Full plans shall consist of:

a. Description of the proposed building work or material change of use, and the plans, particulars and statements required by paragraphs (1) to (4) of regulation 12: and...."

Note.
Bye-laws of the appropriate Water Undertake also apply.

Discharge Pipework
It is a requirement of Building Regulation G3 that any discharge from an unvented system is conveyed to where it is visible, but will not cause danger to persons in or about the building. The tundish and discharge pipes should be fitted in accordance with requirements and guidance notes of Building Regulation G3. The G3 Requirements and Guidance section 3.9 are reproduced in the following sections. Information Sheet No.33 available from the British Board of Agrement gives further advice on discharge pipe installation. For discharge pipe arrangements not covered by G3 Guidance or BBA Info sheet No.33 advice should be sought from either your local Building Control Officer or Ideal Stelrad Group.

G3 Requirement
".....there shall be precautions..... to ensure that the hot water discharged from safety devices is safely conveyed to where it is visible but will not cause danger to persons in or about the building."

G3 Guidance SECTION 3.9
The discharge pipe (D1) from the vessel up to and including the tundish is generally supplied by the manufacturer of the hot water storage system. Where otherwise, the installation should include the discharge pipe(s) (D1) from the safety device(s). In either case the tundish should be vertical, located in the same space as the unvented hot water storage system and be fitted as close as possible and within 500mm of the safety device e.g. the temperature relief valve.

Note.
The tundish is factory fitted during manufacture of the istor. The discharge pipe (D2) from the tundish should terminate in a safe place where there is no risk to persons in the vicinity of the discharge, preferably be of metal and:

a. Be at least one pipe size larger than the nominal outlet size of the safety device unless its total equivalent hydraulic resistance exceeds that of straight pipe 9m long i.e. discharge pipes between 9m and 18m equivalent resistance length should be at least two sizes larger than the nominal outlet size of the safety device, between 18 and 27m at least 3 sizes larger, and so on. Bends must be taken into account in calculating the flow resistance. Refer to
   An alternative approach for sizing discharger pipes would be to follow BS 67100:1987 specification for design installation, testing and maintenance of services supplying water for domestic use within buildings and their curtilages. Appendix E. section E2 and table 21.
b. Have a vertical section of at least 300mm long, below the tundish before any elbows or bends in the pipework.
c. Be installed with a continuous fall.
d. Have discharges visible at both the tundish and the final point of discharge but where this in not possible or is practically difficult there should be clear visibility at one or other of these locations. Examples of acceptable discharge arrangements are:
   i. Ideally below a fixed grating and above the water seal in a trapped gully.
   ii. Downward discharges at low level; i.e. up to 100mm above external surfaces such as car parks, hard standings, grassed areas etc. are acceptable providing that where children may play or otherwise come into contact with discharges a wire cage or similar guard is positioned to prevent contact whilst maintaining visibility.
   iii. Discharges at high level; e.g. into a metal hopper and metal down pipe with the end of the discharge pipe clearly visible (tundish visible or not) or onto a roof capable of withstanding high temperature discharges of water and 3m from any plastic guttering system that would collect such discharges (tundish visible).
   iv. Where a single pipe serves a number of discharges, such as in blocks of flats, the number served should be limited to not more than 6 systems so that any installation discharging can be traced reasonably easily. The single common discharge pipe should be at least on pipe size larger than the largest individual discharge pipe (D2) to be connected. If unvented hot water storage systems are installed where discharges from safety devices may not be apparent i.e. in dwellings occupied by blind , infirm or disabled people, consideration should be given to

6 SYSTEM REQUIREMENTS - Domestic Hot Water (continued)

the installation of an electronically operated device to warn when discharge takes place.

Note.

The discharge will consist of scalding water and steam. Asphalt, roofing felt and non-metallic rain water goods may be damaged by such discharges.

Worked example of discharge pipe sizing

The example below is for a G1/2 temperature relief valve with a discharge pipe (D2) having 4 No. elbows and length of 7m from the tundish to the point of discharge.

From Table 1:

Maximum resistance allowed for a straight length of 22mm copper discharge pipe (D2) from a G1/2 temperature relief valve is 9.0m

Subtract the resistance for 4 No. 22mm elbows at 0.8m each = 3.2m.

Therefore the permitted length equates to 5.8m.

5.8m is less than the actual length of 7m therefore calculate the next largest size.

Maximum resistance allowed for a straight length of 28mm pipe (D2) from a G1/2 temperature relief valves equates to 18m.

Subtract the resistance of 4 No.28mm elbows at 1.0m each: 4.0m.

Therefore the maximum permitted length equates to:14m.

As the actual length is 7m a 28mm min (D2) copper pipe will be satisfactory.

WARNINGS

- Under no circumstances should the factory fitted temperature/pressure relief valve be removed other than by authorised personnel. To do so will invalidate any warranty claim.
- Table 1. Sizing if copper discharge pipe (D2) for common temperature relief valve outlet sizes.
- Control and safety valves MUST NOT be tampered with.
- The discharge pipe MUST NOT be blocked or used for any other purpose.
- The tundish must not be removed.
- Electrical components must not be sited near the tundish.

Valve outlet size	Minimum discharge pipe D1	Minimum discharge pipe D2 from tunish	Maximum resistance allowed, expressed as a length of straight pipe (i.e. no elbow or bends)	Resistance created by each elbow or bend
G1/2	15mm	22mm 28mm 35mm	up to 9m up to18m up to 27m	0.8m 1.0m 1.4m
G3/4	22mm	28mm 35mm 42mm	up to 9m up to 18m up to 27m	1.0m 1.4m 1.7m
G1	28mm	35mm 42mm 54mm	up to 9m up to 18m up to 27m	1.4m 1.7m 2.4m

The boiler does not normally need a bypass but at least some radiators on the heating circuit, of load of at least 10% of the minimum boiler output, must be provided with twin lockshield valves so that this minimum heating load is always available. See note regarding thermostatic radiator valves on page 10.

Note.

Systems incorporating zone valves which could completely cut off the flow through the system, must be wired such that the boiler will not fire or continue to fire when this occurs.

Typical discharge pipe arrangement
(see Guidance section 3.9)

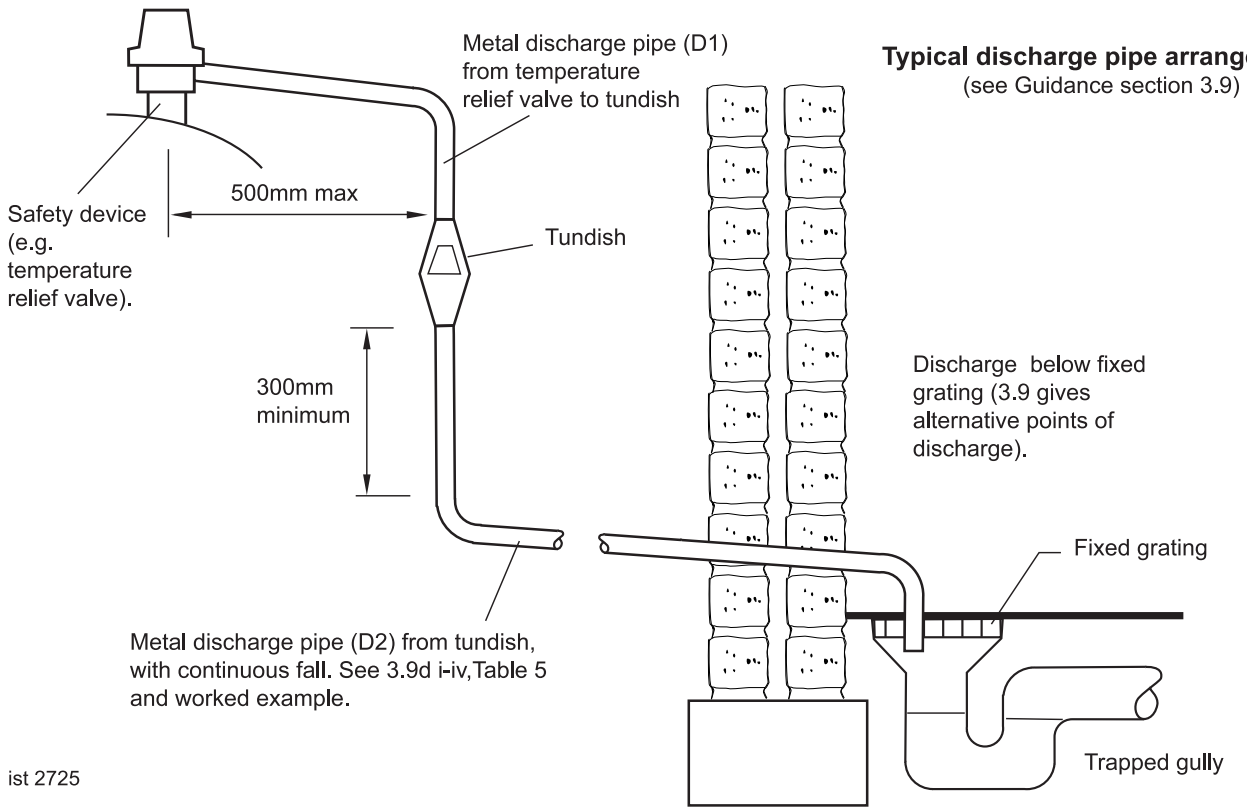

ist 2725

7 SYSTEM BALANCING

BALANCING

1. Set the programmer CH Channel to ON.

   Close the manual or thermostatic valves on all radiators, leaving the twin lockshield valves (on the radiators referred to above) in the OPEN position.

   Turn up the room thermostat and adjust these lockshield valves to give boiler flow and return temperatures not more than 20 °C apart.

   These valves should now be left as set.
2. Open all manual or thermostatic radiator valves and adjust the lockshield valves on the remaining radiators, to give around 15 °C temperature drop at each radiator.
3. Adjust the room thermostat and programmer to NORMAL settings.

8 WATER TREATMENT

The istor boiler has an ALUMINIUM alloy heat exchanger

IMPORTANT.
The application of any other treatment to this product may render the guarantee of Ideal Stelrad Group invalid.

Ideal Stelrad Group recommend Water Treatment in accordance with the Benchmark Guidance Notes on Water Treatment in Central Heating Systems. **Ideal Stelrad Group** recommend only the use of FERNOX-COPAL or MB1, GE BETZ SENTINEL X100 or Salamander Corrosion Guard inhibitors and associated water treatment products, which must be used in accordance with the manufacturers' instructions.

Domestic Hot water
In hard water areas where main water can exceed 200ppm Total Hardness (as defined by BS 7593:2006 Table 2) a scale reducing device should be fitted into the boiler cold supply within the requirements of the local water company. The use of artificially softened water, however, is not permitted.

Ideal Stelrad Group recommend the use of Fernox Qantomat, GE Betz Sentinel Combiguard and Calmag CalPhos I scale reducing devices, which must be used in accordance with the manufacturers' instructions.
For further information contact:

Fernox Manufacturing Co. Ltd.
Cookson Electronics
Forsyth Road
Sheerwater Woking
Surrey GU21 5RZ
+44 (0) 1799 521133

Sentinel Performance Solutions
The Heath Business &
Technical Park, Runcorn,
Cheshire, WA7 4QX
Tel. 0800 389 4670
www.sentinel-solutions.net

Salamander Engineering Ltd
The Heath Business &
Technical Park,
Runcorn,
Cheshire, WA7 4QX
Tel: +44 (0) 121 3780952

Calmag Ltd.
Unit 4-6, Crown Works
Bradford Road
Sandbeds, Keighley
West Yorkshire BD20 5LN
Tel: +44 (0) 1535 210 320

Notes.
1. It is most important that the correct concentration of the water treatment product is maintained in accordance with the manufacturers' instructions.
2. If the boiler is installed in an existing system any unsuitable additives *MUST* be removed by thorough cleansing. BS. 7593:2006 details the steps necessary to clean a domestic central heating system.
3. In hard water areas, treatment to prevent lime scale may be necessary - however, the use of artificially softened water is *NOT* permitted.
4. Under no circumstances should the boiler be fired before the system has been thoroughly flushed.

9 BOILER ASSEMBLY - Exploded View - Legend for Frames 10 & 11

1. Case sealing panel.
2. Sump cover plate.
3. Flue sensing nipple.
5. Flue manifold kit.
6. Flue manifold fixing.
7. Burner
8. Combustion chamber insulation.
9. Heat engine.
10. Injector & housing.
11. Venturi kit.
12. Fan assembly.
13. Gas valve inlet pipe.
14. Auto air vent.
15. Gas cock.
16. Gas valve.
17. Fan fixing kit.
18. Orifice plate kit.
20. Thermistor (control/return)
21. Overheat thermostat.
22. Ignition electrode.
23. Flame detection electrode.
27. Condensate 'S' trap.
29. User controls.
33. Mains switch
34. Spark generator.
34a. Ignition lead.
37. Prepiping frame.
45. Turret gasket kit.
55. Lower tundish Pipe.
56. DHW outlet Pipe.
59. Cold in pipe.
61. CH flow pipe.
66. Mains gas pipe.
67. Pressure relief valve pipe.
70. Tank pipe.
73. CH return assembly.
74. CH flow assembly.
77. Tank flow pipe (Top).
81. DHW expansion vessel.
82. CH expansion vessel.
83. Pump.
85. Divertor valve.
89. Thermostatic mixing valve.
90. Temp & pressure relief valve.
91. CH Pressure relief valve.
92. DHW Pressure relief valve.
93. Tundish assy.
95. Filling loop.
101. Pressure gauge.
102. Fascia controls assy.
103. Dry fire thermistor.

10 BOILER MODULE ASSEMBLY - Exploded View

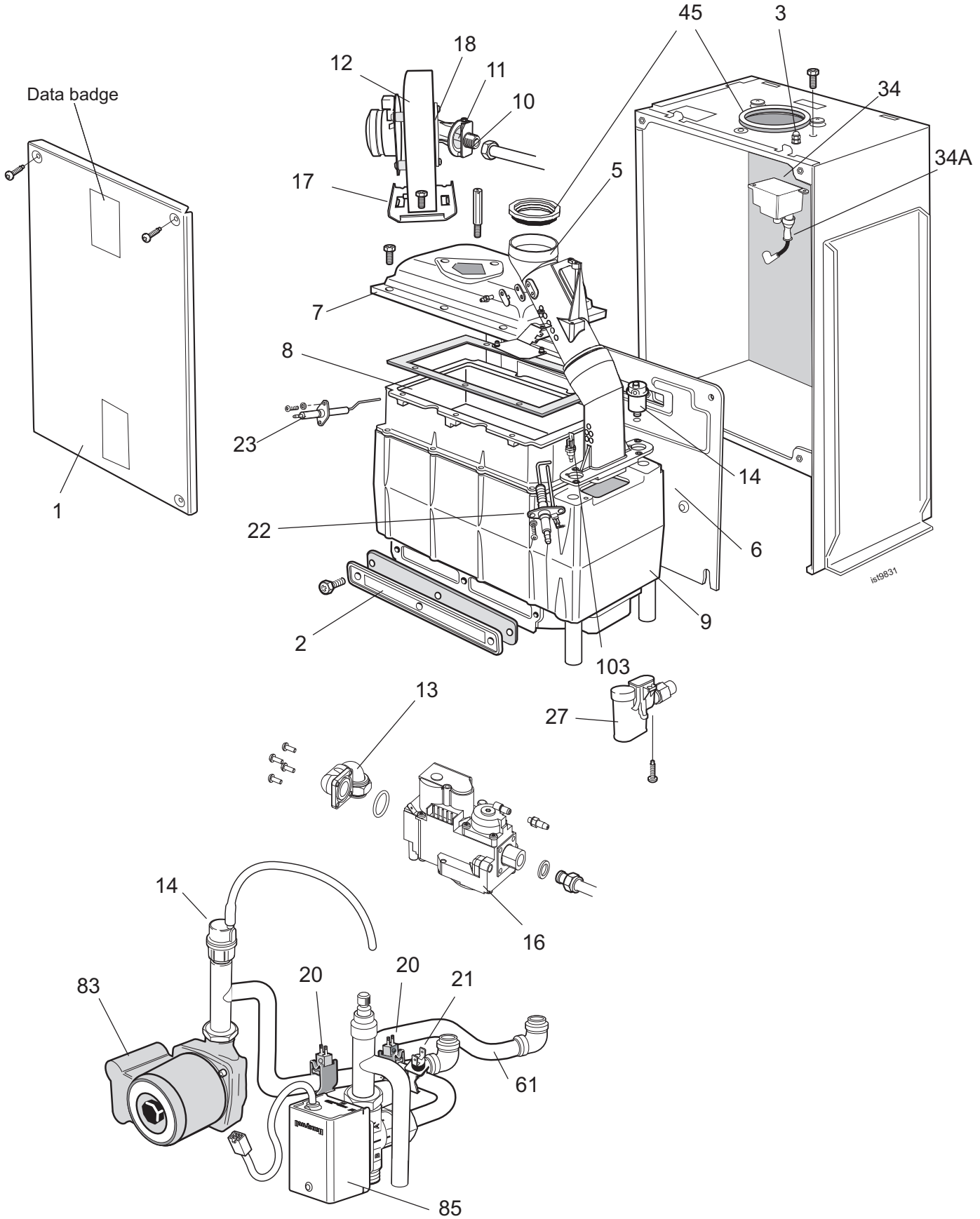

11 TANK MODULE ASSEMBLY - Exploded View

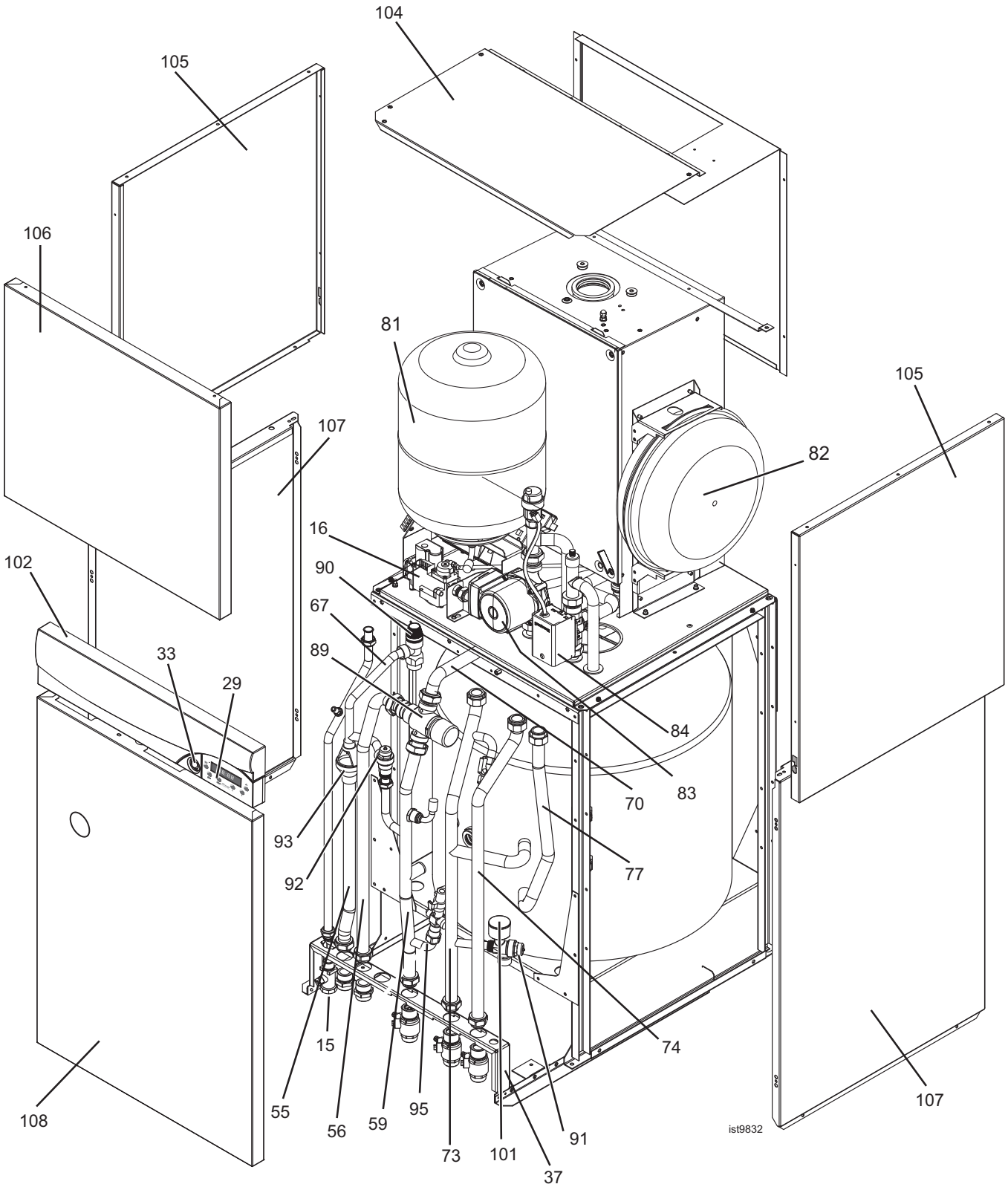

12 BOILER PACKAGING AND REMOVAL

The boiler is supplied in two separate cartons. The tank module carton includes the pre-piping frame, the hardware pack, the literature pack and cardboard template.

The boiler module carton includes the controls facia panel with integral programmer.

A telescopic flue assembly (if specified) for lengths up to 595mm, rear or side flue outlet, in Pack B.

Optional extras, If ordered, are available in separate boxes.

The tank module carton should be opened first and the prepiping frame removed. It is unnecessary to unpack the boiler module at this stage.

1. Ensure the tank module is stood correctly as marked on the carton.
2. Remove the strapping.
3. Fold back the top flaps to gain access to the instructions, the pre-piping frame and cardboard template.
4. Remove the instructions and read thoroughly.
5. **UNSCREW THE RETAINING SCREWS AND REMOVE THE PRE-PIPING FRAME FROM THE CARTON.**

Note.

The appliance packaging may be left on for protection at this stage, while all service pipes are made to the pre-piping frame.

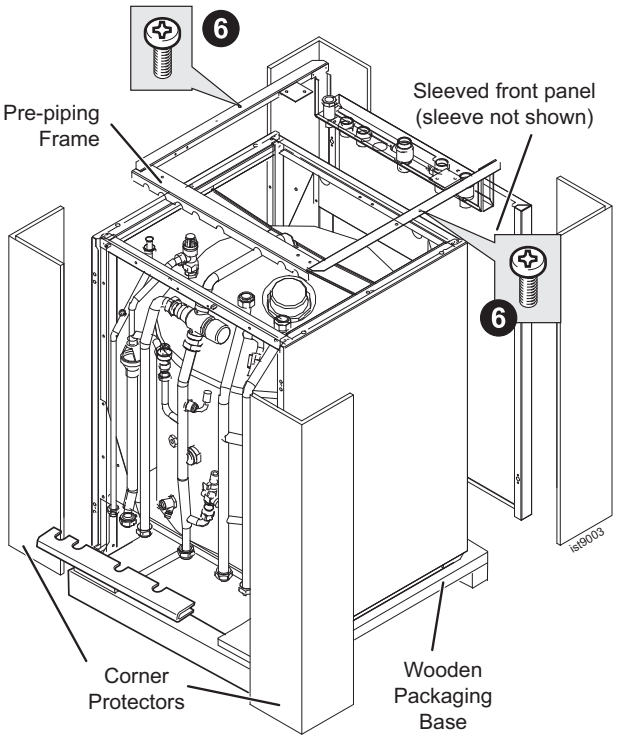

TANK MODULE

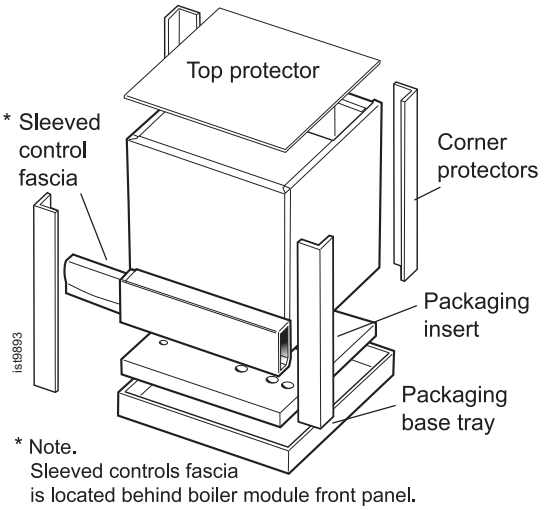

BOILER MODULE

Hardware Pack Contents

A Mains connector assembly - 1 off
B Fibre sealing washer - 8 off
C Gas line sealing washer - 2 off
D 3/4" straight adaptor & nut - 1 off
E 15mm olive -1 off
F 15mm PRV nut -1 off
G M5 x 6 pp screw - 2 off
H M5 x 12 pp screw - 2 off
J Strain relief bush - 1 off
K Turret clamp - 1 off
L M5x10 p hex screw (turret fixing) - 1 off
M Pressure reducing valve (preset to 2 bar) - 1 off
N PRV lift lever - 1 off
P Pressure Relief Pipe - 1 off

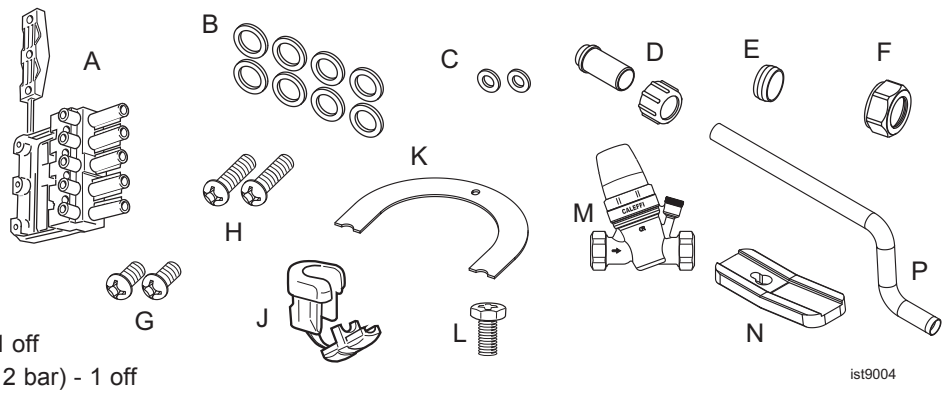

Pack B Contents

A Telescopic flue terminal
B Flue turret
C Rubber Terminal Wall Seal
D Screw
E Sealing tape

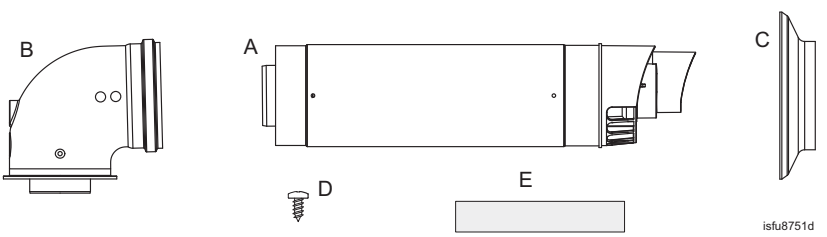

13 FITTING THE PRE-PIPING FRAME

1. Using the cardboard template mark the position of the appliance and the fixing holes for the pre-piping frame.
2. Fasten the pre-piping frame to the floor.

   Using suitable fixing screws and plugs dependant on the floor material, fasten the pre-piping frame to the floor. Take care not to pierce any underfloor piping or electrical wiring.

Note.
Pipe runs to the service connections on the piping frame must be from the front, back or below, and not cross the side channels of the frame, where the appliance will slide on and stand.

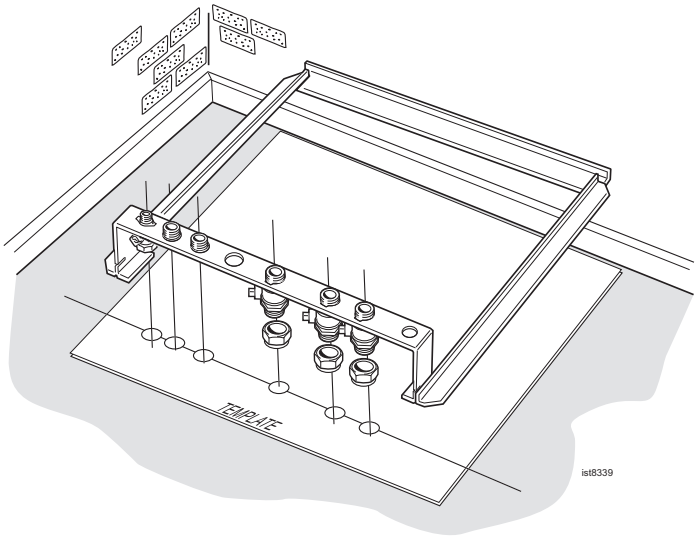

14 WATER (DHW) CONNECTIONS

Domestic Hot Water Connections

Refer to the Note in Frame 13, for guidance.

IMPORTANT

Do not subject any of the isolating valves to heat as the seals may be damaged.

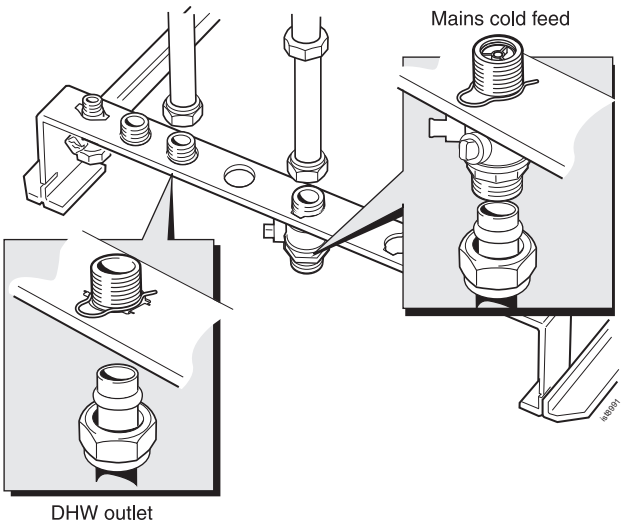

The PRV (pressure reducing valve) provided in the hardware pack MUST be fitted in a convenient point on the mains cold inlet to the appliance. Once fitted, a pressure balanced cold feed to mixer taps and showers may be taken downstream of the PRV but before the istor appliance.

Note.

1. *The PRV has a built in serviceable water filter. It must therefore be located in a suitable place for future maintenance.*
2. *It is pre-set to deliver water to the istor at 2 bar to ensure safe operation of the DHW system.*
3. *The pressure reducer can be installed with the pipework either vertical or horizontal. However it must not be installed upside down.*

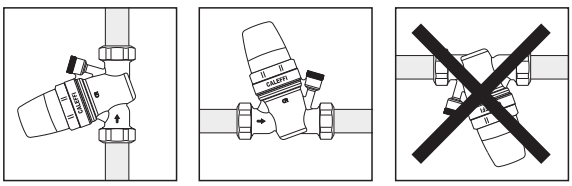

4. *To obtain optimum DHW delivery from the appliance all DHW pipes should be run in 22mm.*

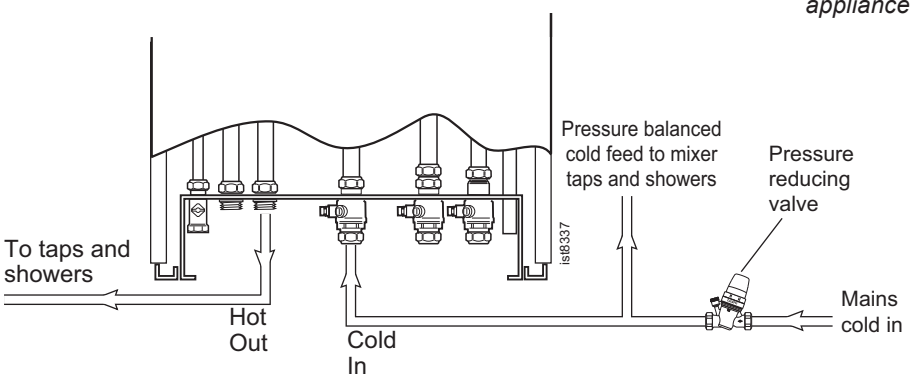

Note.
When installing the PRV, consideration should be given to the use of isolation valves either side of the PRV for future servicing and maintenance.

15 CH WATER CONNECTIONS

Central Heating connections

Refer to the Note in Frame 13 for guidance.

IMPORTANT
Do not subject any of the isolating valves to heat as the seals may be damaged.

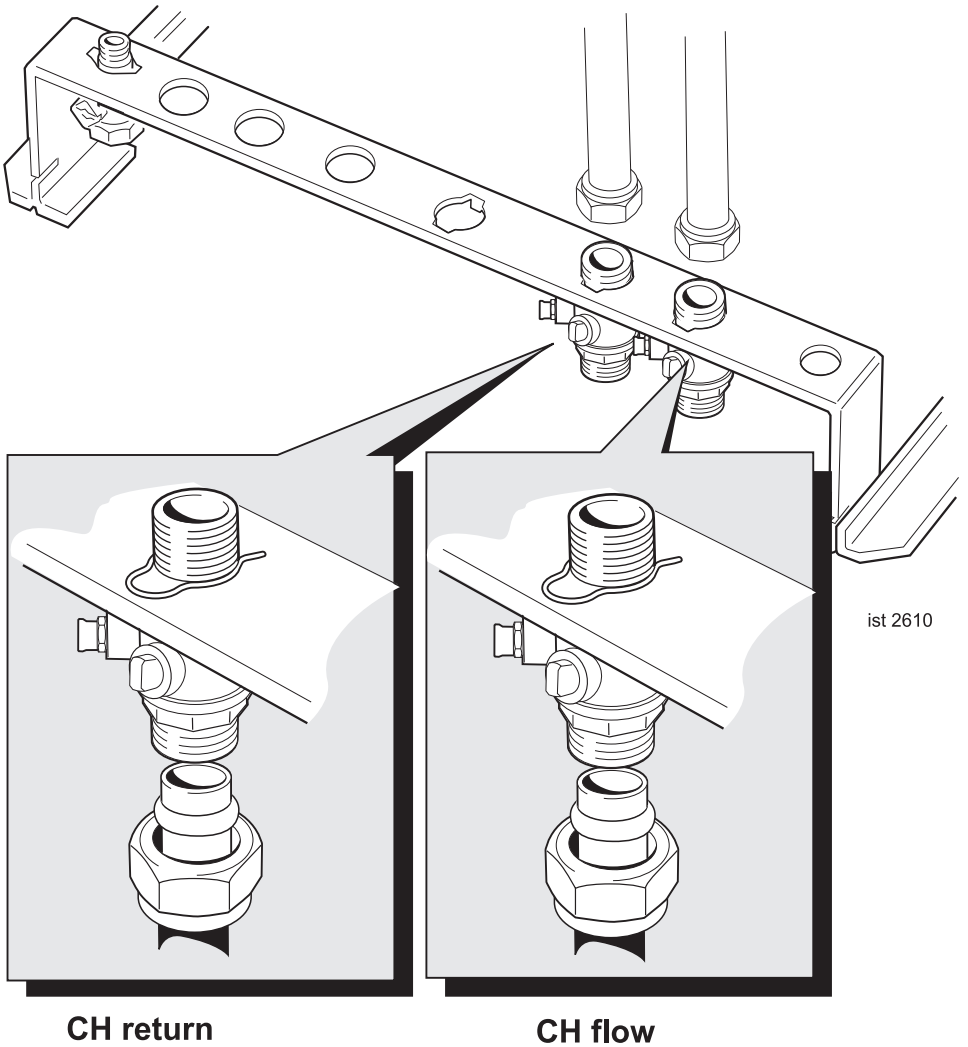

16 GAS CONNECTION

IMPORTANT.
The gas service cock is sealed with a non-metallic fibre washer so must not be overheated when making capillary connections.

For additional gas supply information refer to “Gas Supply” on page 9.

1. Extend a gas supply pipe of not less than 15mm O.D. copper to the boiler.

   A working gas pressure of 20mbar (8" w.g) should be available at the boiler inlet, with the boiler firing at full DHW output.

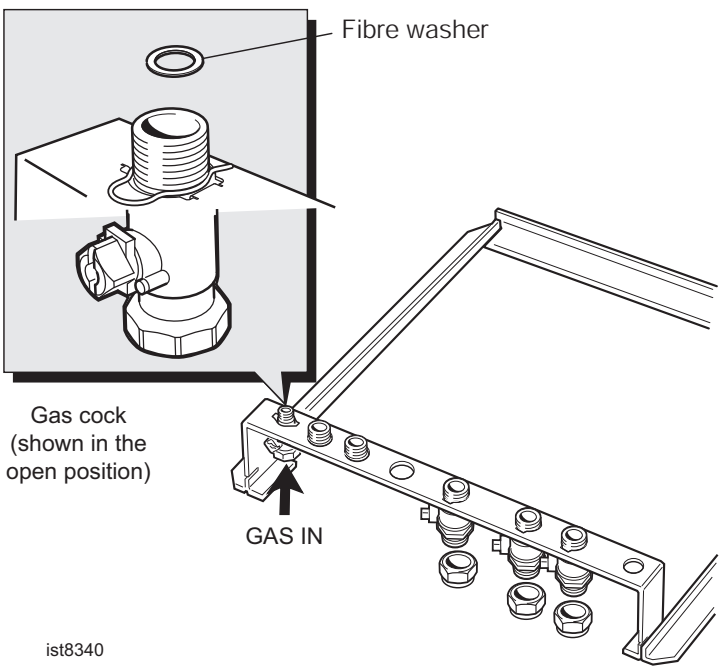

17 SAFETY VALVE DRAIN (DHW)

The discharge pipe should be positioned so that the discharge of water or steam cannot create a hazard to the occupants of the premises or damage the electrical components and wiring.

IMPORTANT.
The discharge pipe arrangement must comply with G3 Building Regulations. This is covered in Frames 6 and 7.

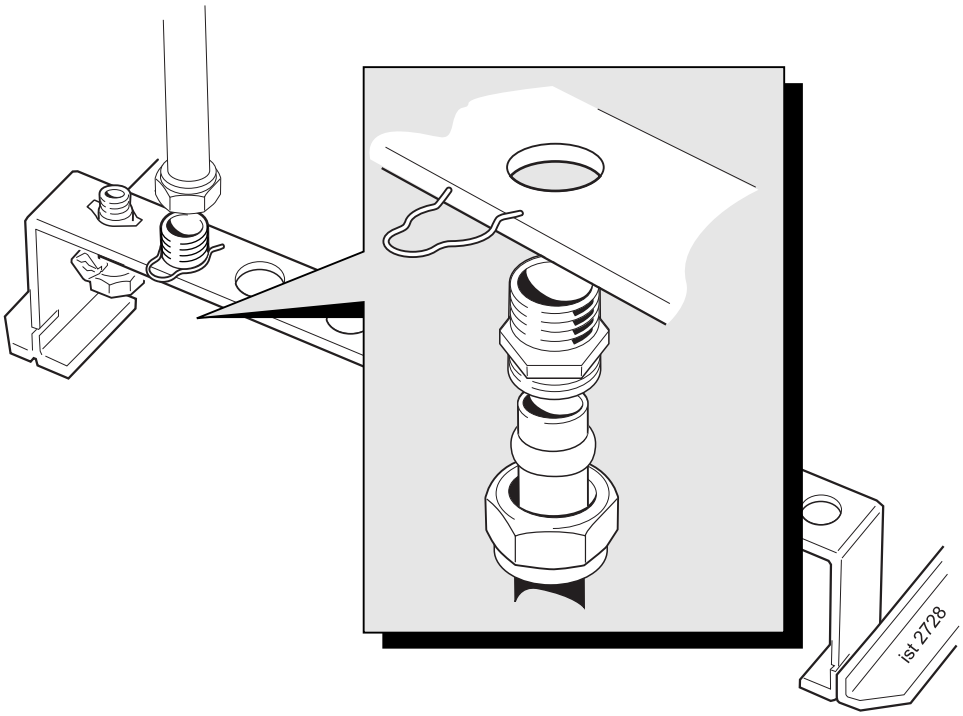

18 SAFETY VALVE DRAIN (CH)

A preformed 15mm is supplied strapped to the cylinder module frame. This pipe connects to the safety valve, and projects through the RH hole in the pre-piping frame, for routing the drain under and away from the appliance.

Note.

The length of this pipe is suitable for the HE260 model. For the HE325 model 100mm should be cut off the longer section.

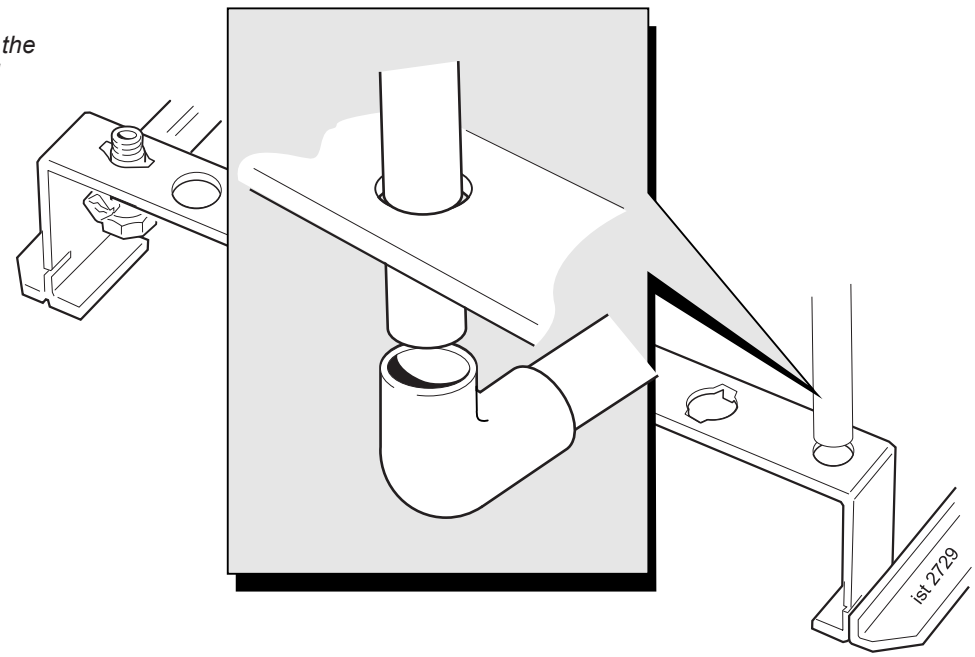

19 CONDENSATE DRAIN

The condensate drain connection point position is shown in the diagram below. A 700mm long flexible hose is supplied strapped to the cylinder module frame and an adaptor is provided in the hardware pack for connection to this. It may be necessary to make provision for connection to this, prior to moving the appliance into position.

Note.

A condensate pump kit is available for fitting outside of the appliance, if the minimum fall of 1 in 20 away from the boiler, throughout its length is not available.
If fitting this kit refer to the installation instructions within the kit, otherwise follow the guidance below.

The condensate drain provided on the boiler must be connected to a drainage point, preferably within the building.

Ensure that the condensate trap is full of water before commissioning the boiler - refer to Frame 32.

The routing of the drain must be made to allow a minimum fall of 1 in 20 away from the boiler, throughout its length.

The drainage pipework must be arranged so that obstruction (e.g. through freezing) of external drainage pipe does not give rise to spillage within the dwelling.

IMPORTANT.
Any external runs must be insulated.

Excessive external pipe runs should be avoided in order to prevent possible freezing.

All pipework and fittings in the condensate drain system must be made of plastic. No other materials may be used.

The drain outlet on the boiler is standard 21.5mm overflow pipe. This size must not be reduced in any part of its length.

If external condensate pipe run is greater than 3m then pipe must be 32mm nominal diamater. Consideration should be given to insulating external condensate pipe runs.

In order to defer the onset of freezing of the condensate drain when the pipe is run externally the pipe should be run as far as possible within the building.

The boiler condensate drain connection is suitable for Marley 'Terrain' tubing.

A siphon kit is available to prevent freezing.

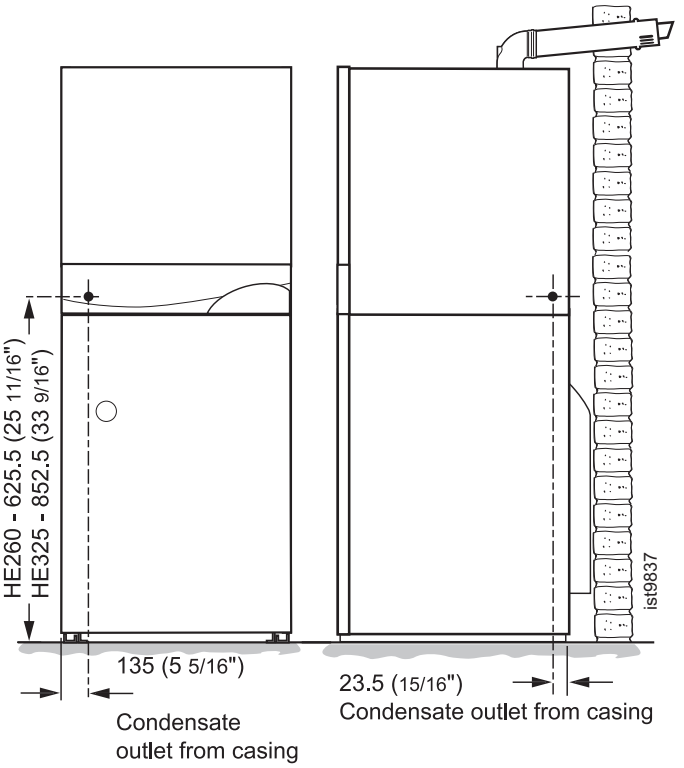

20 CONDENSATE PIPE TERMINATION CONFIGURATIONS

Notes: ALL EXTERNAL PIPE RUNS MUST BE IN ACCORDANCE WITH BS6798

1. INTERNAL TO SINK WASTE UPSTREAM OF SINK WASTE TRAP

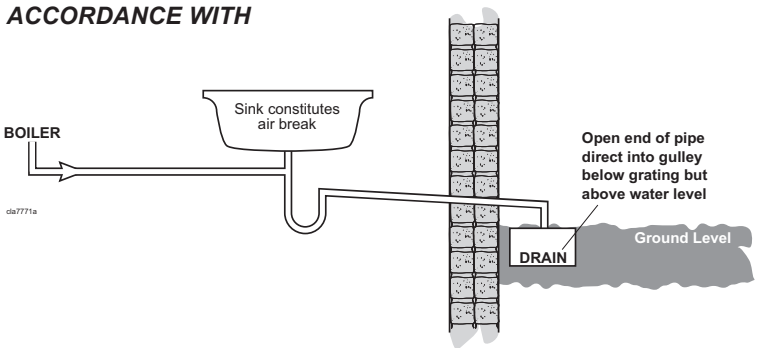

2. INTERNAL TO SINK WASTE DOWNSTREAM OF SINK WASTE TRAP (PREFERRED METHOD)

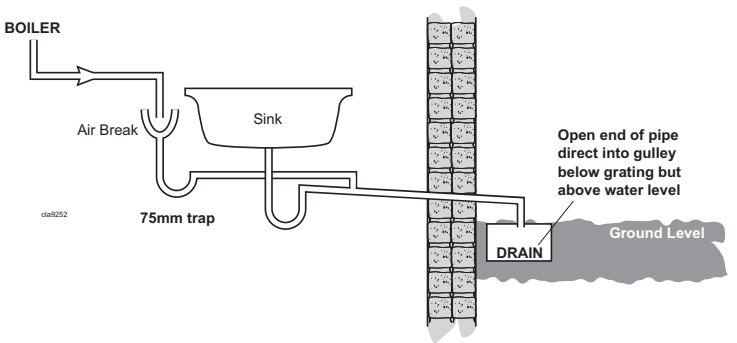

continued . . . . . .

21 CONTINUED...

3. INTERNAL CONNECTION TO SOIL AND VENT STACK

Termination into a down pipe can take place providing it can be confirmed that the down pipe is part of a combined waste and rain water system.

* Make connection to SVP using a solvent welded saddle

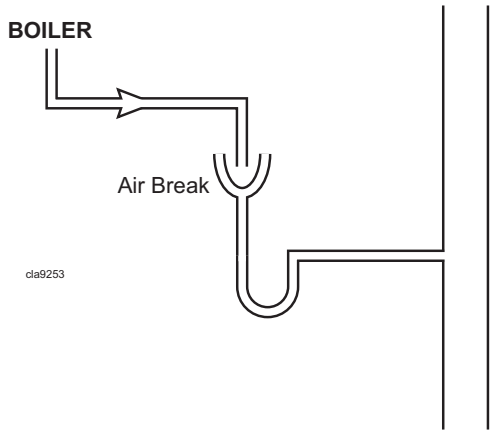

4. TERMINATION TO SOAK AWAY

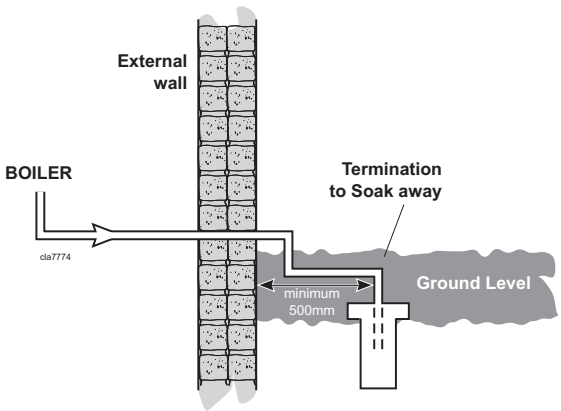

5. TERMINATION TO DRAIN / GULLEY

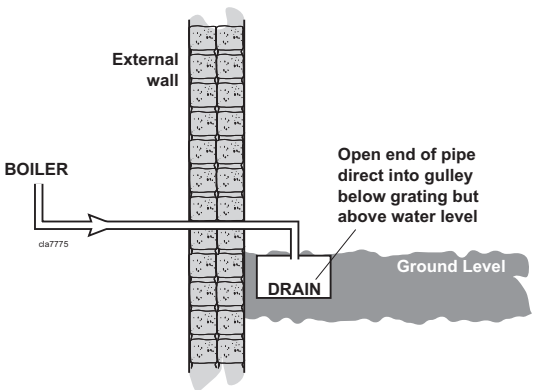

22 PACKAGING REMOVAL (TANK MODULE)

1. If the tank module is still packaged, lift out the sleeved front panel and store to one side to avoid damage.

Note.
Leave pipe nut protector in place to aid installation onto piping the frame.

2. Remove and save the floor cardboard template.
3. Remove the packaging sleeve, corner protectors and front protector.
4. Remove two front screws securing tank module to the packaging base.
5. Slide module forward to free it from rear fixings.

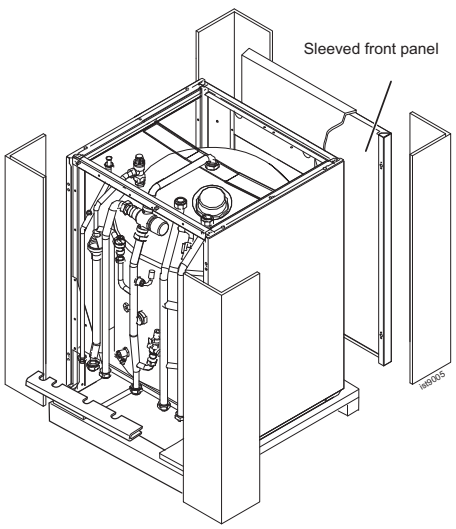

23 TANK CONNECTION TO THE PIPING FRAME

General
Before moving the appliance onto the piping frame provision must be made for the condensate drain which may be easier before the boiler is moved into position. Refer to Frame 19.

1. Lift tank section over the piping frame and engage the rear of the base onto the runner of the piping frame.

Note.

At this stage if the appliance is being fitted into a cupboard with limited access it may be advisable to attach the boiler module on top of the tank module prior to sliding into place. If so refer to Frame 25 for attaching the boiler module. (Note that the CH flow pipe is supplied strapped to the cylinder module frame).

2. Slide the tank backward until the stops on the frame are reached.
3. Remove the pipe nut protector from the cylinder module pipe nuts.
4. The pipes can now be connected to the piping frame once the transit bracket is removed (see illustration).

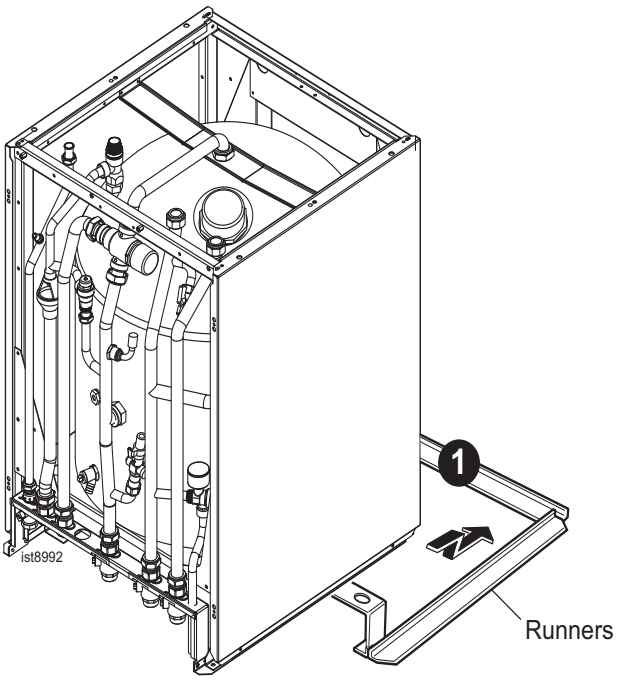

24 BOILER MODULE PACKAGING AND REMOVAL

1. Ensure the boiler module is stood correctly as marked on the carton.
2. Remove the strapping.
3. Fold back the top flaps and remove the top protector/ mounting template.
4. Lift off the packaging sleeve and corner protection and discard.
5. Unscrew the 2 - M4 x 10 screws securing the front panel and remove to one side to avoid damage.
6. Remove the controls fascia box and store to one side to avoid damage.

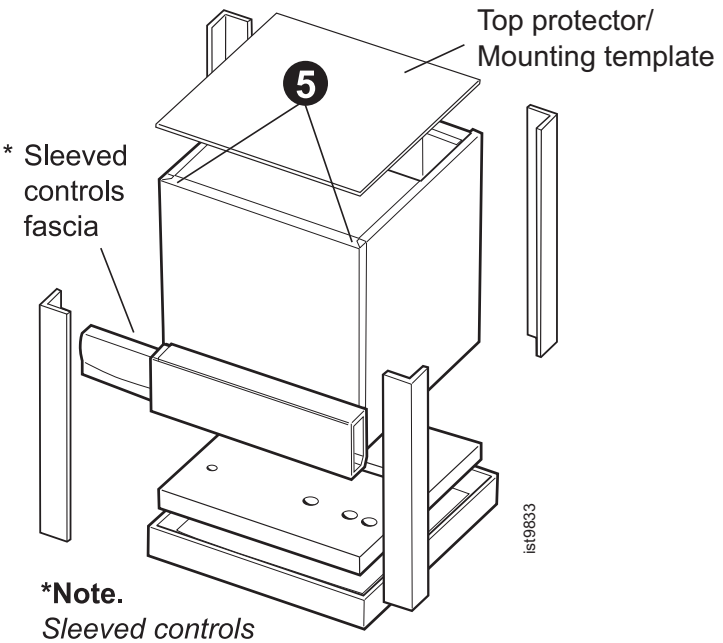

***Note.**
Sleeved controls fascia is inside boiler module.

25 BOILER UNIT CONNECTION

General

The gas pipe is supplied strapped to the cylinder module frame.

It is suggested that all pipes are connected to the pre-piping frame before boiler connections are made.

It is also suggested that the CH safety valve drain is connected before the CH flow pipe is fitted.

1. Lift boiler unit onto the tank frame.
2. Connect the 2 - M5x12 screws connecting the 2 units together.
3. Connect the gas pipe to the bottom of the boiler.
4. Connect the CH flow return pipe to the union.
5. Connect the DHW flow pipe to the union.
6. Connect the CH flow pipe to the union.
7. Connect the flexible hose to the DHW expansion vessel.

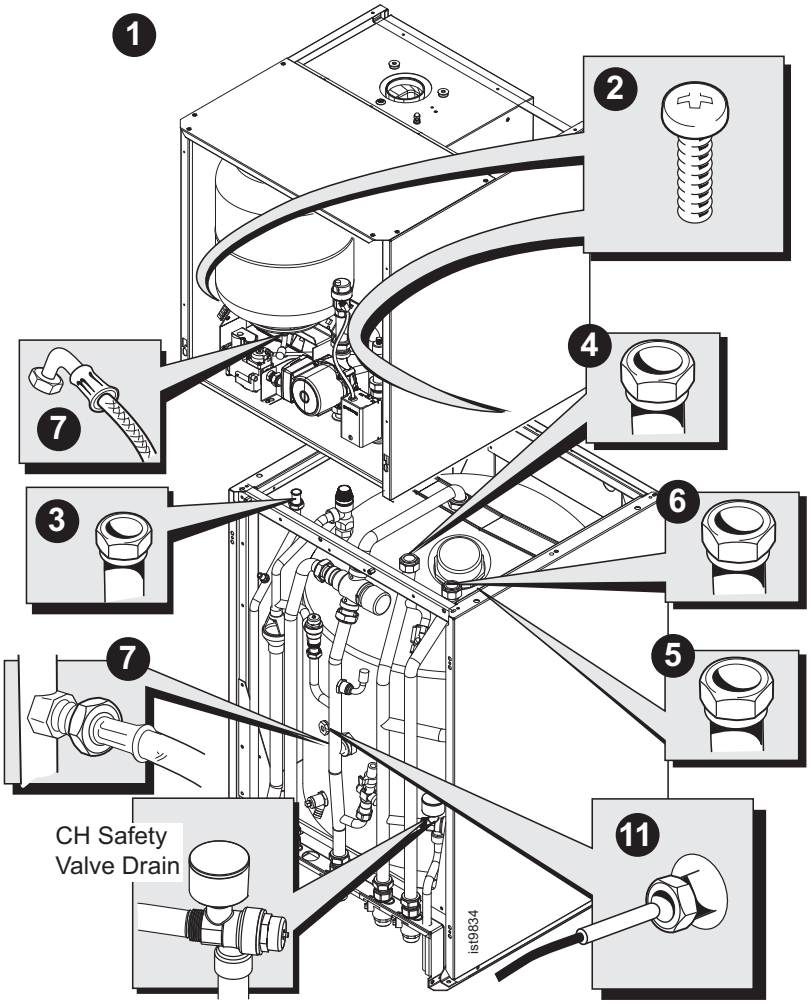

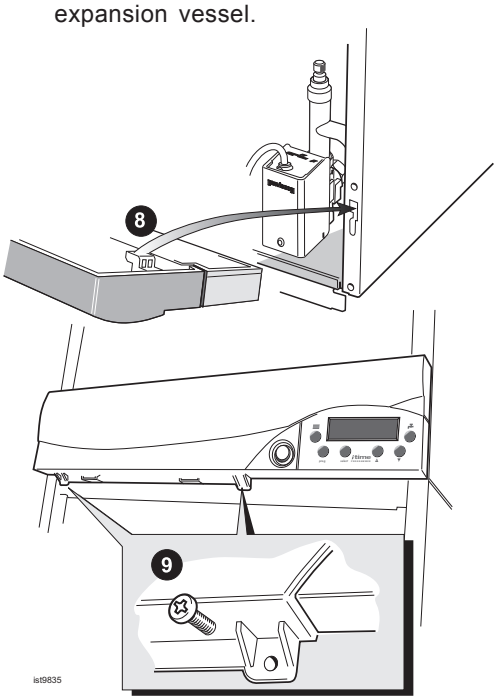

8. Fit the controls fascia panel by locating the two lugs on the panel into the slots on the boiler unit.
9. Secure the panel with the 2 - M5x6 screws provided.
10. Connect the 14 way in-line molex connection on the fascia panel to the wiring harness

IMPORTANT.
Care must be taken when assembling this molex connector to ensure the connections are fully home and located.

11. Insert the DHW sensor into the pocket on the cylinder. Push fully home and secure with the Heyco bush provided in the hardware pack.

26 FLUE SYSTEM

This appliance is suitable for use with the following flue system.

1. 100mm Concentric flue system (supplied as standard). Refer to Frame 3.
2. Powered Vertical Flue kit. Refer to Frame 3
3. Roof Flue kit. Refer to Frame 3

27 DETERMINING THE FLUE LENGTH AND FLUE PACKS REQUIRED
For the 100mm concentric flue system

Dimension X - Wall thickness.

Dimension L - Wall thickness plus boiler spacing.

Dimension R - Wall thickness plus boiler spacing.

FLUE KITS

Pack B - supplied as standard

Flue Finishing Kit - supplied as an optional extra

Pack D - optional extension kit for side flue or rear flue outlet.

Screw Kit - Optional kit for mechanical fixing of flue joints

Refer to 'Flue Extension Ducts'

Total Flue length dimension (measuring from CL of turret to outside wall)			Flue
Rear flue dim. X+188	**LH Side flue dim. L+217.5**	**RH Side flue dim. R+342.5**	**Extra packs required**
Up to 595 mm	Up to 595 mm	Up to 595 mm	none
Up to 1545 mm	Up to 1545 mm	Up to 1545 mm	Pack D - 1 off
Up to 2495 mm	Up to 2495 mm	Up to 2495 mm	Pack D - 2 off
Up to 3445 mm	Up to 3445 mm	Up to 3445 mm	Pack D - 3 off
Up to 4395 mm	Up to 4395 mm	Up to 4395 mm	Pack D - 4 off
Up to 5345 mm	Up to 5345 mm	Up to 5345 mm	Pack D - 5 off
Up to 6000 mm	Up to 6000 mm	Up to 6000 mm	Pack D - 6 off

For RH Side Flues

- If the appliance is installed at minimum clearance from a standard cavity wall the horizontal flue kit (600mm long) is required.
- If the telescopic flue kit is used, an additional 'D' Pack Extension will be needed.

For LH Side and Rear Flues

- For minimum clearance from standard cavity wall the telescopic flue kit only is required.

Note.

1. *It is recommended that a support bracket is fitted for every 1 meter of extension pipe used and a bracket should be used at every joint, to ensure pipes are held at the correct angle.*

   If a slip joint coupling is to be used then a bracket should be used to secure the collar.
2. *When extension 'D' packs are used the flue duct MUST be inclined at 1.5 degrees to the horizontal to allow condensate to drain back into the boiler and out through the condensate drain.*
3. *If the telescopic 'B' pack or horizontal flue terminal (600 long) only are used, they may be mounted horizontally. The 1.5 degrees is taken care of by the inclination of the flue within the air pipe.*
4. *Only use water as a lubricant during assembly. Do not use mineral based oils.*

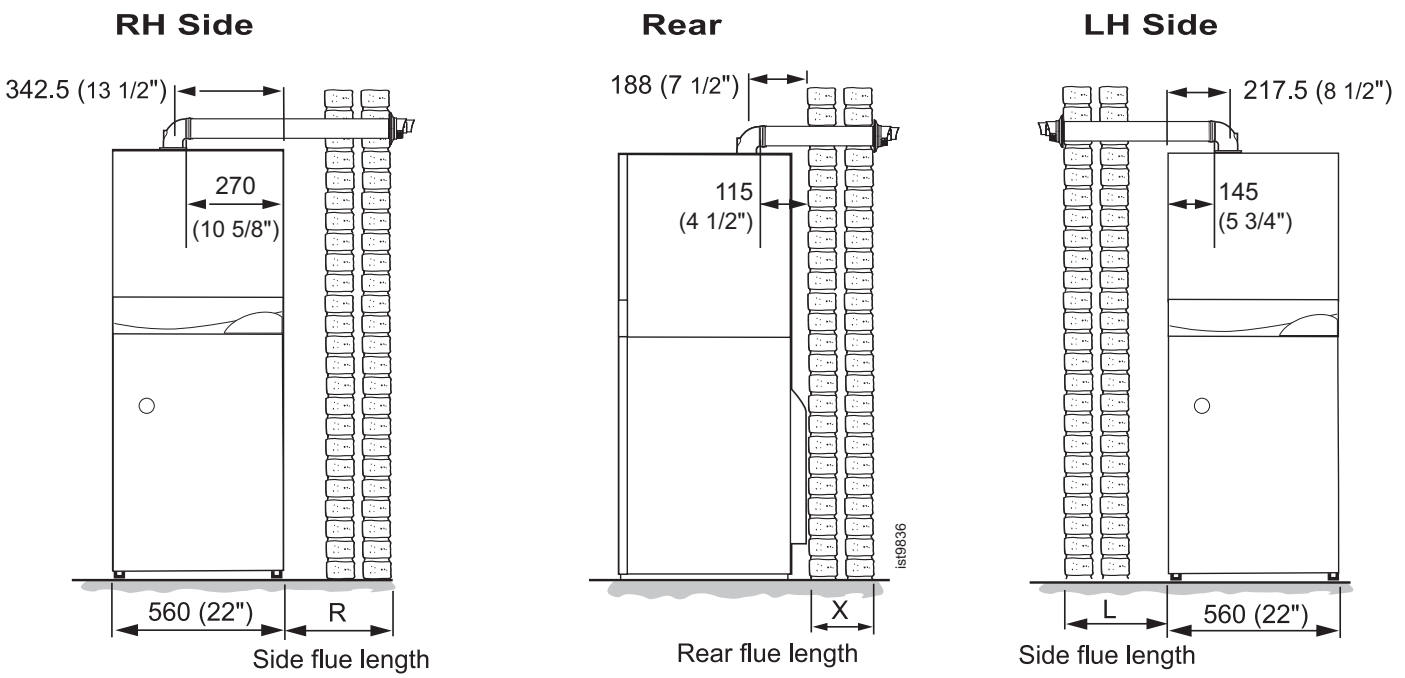

28 FLUE ASSEMBLY - Exploded View

Rear flue arrangement shown

1. An optional flue duct extension kit is required for flue lengths greater than :

   RH Side 595mm

   LH Side 595mm

   Rear 595mm

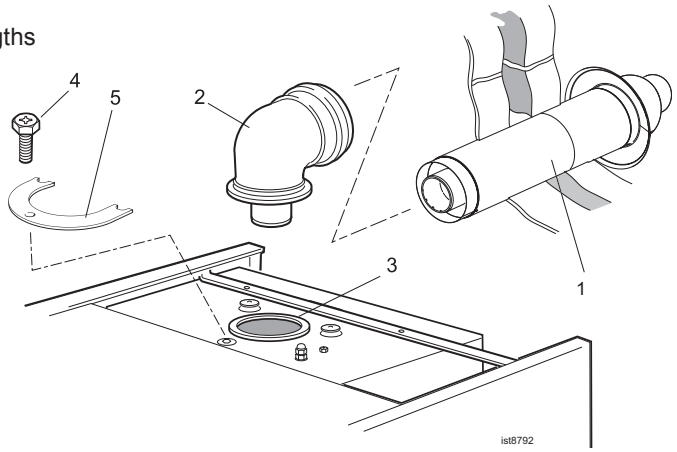

LEGEND
1. Duct assembly.
2. Flue Turret.
3. Turret seal.
4. M5 x 10 pozi screw.
5. Turret clamp.

29 PREPARING THE WALL

WARNING. Ensure that, during the cutting operation, masonry falling outside of the building does not cause damage or personal injury.

1. Cut the flue hole (preferably with a 5" core boring tool), ensuring that the hole is square to the wall. Both wall faces immediately around the cut hole should be flat.

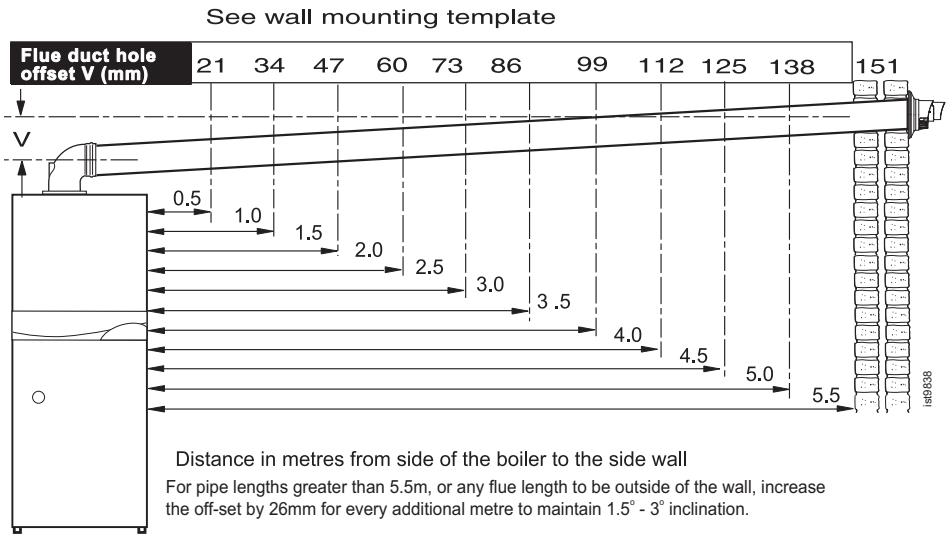

Distance in metres from side of the boiler to the side wall

For pipe lengths greater than 5.5m, or any flue length to be outside of the wall, increase the off-set by 26mm for every additional metre to maintain 1.5° - 3° inclination.

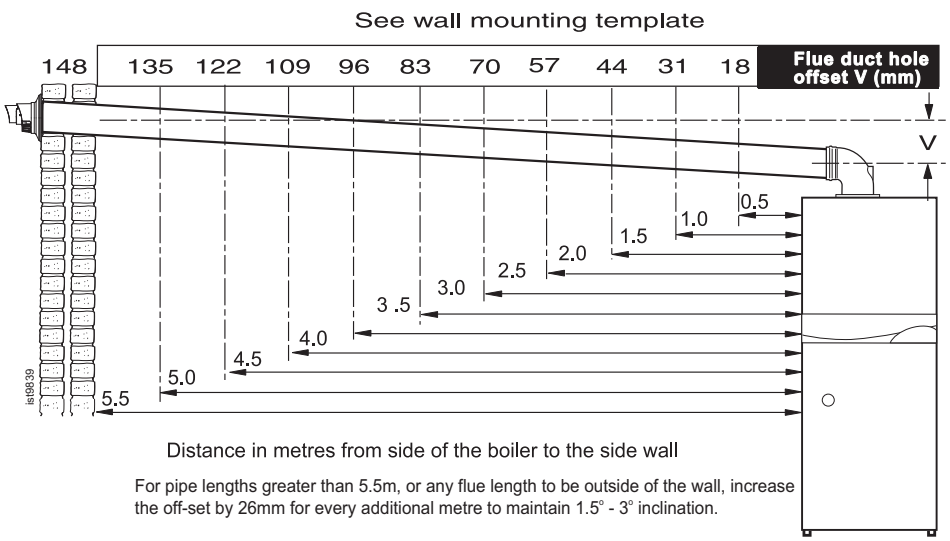

Distance in metres from side of the boiler to the side wall

For pipe lengths greater than 5.5m, or any flue length to be outside of the wall, increase the off-set by 26mm for every additional metre to maintain 1.5° - 3° inclination.

FLUE OUTLET

30 TERMINAL WALL SEAL ASSEMBLY / POSITIONING

Prior to fitting the flue, the rubber terminal wall seal provided in the flue pack MUST be fitted to the flue terminal as shown below in Figure 1.

Once the flue is installed it is IMPORTANT that the rubber terminal wall seal is pressed against the outside wall to create an adequate seal between the flue and wall as shown in Figure 2.

FIGURE 1

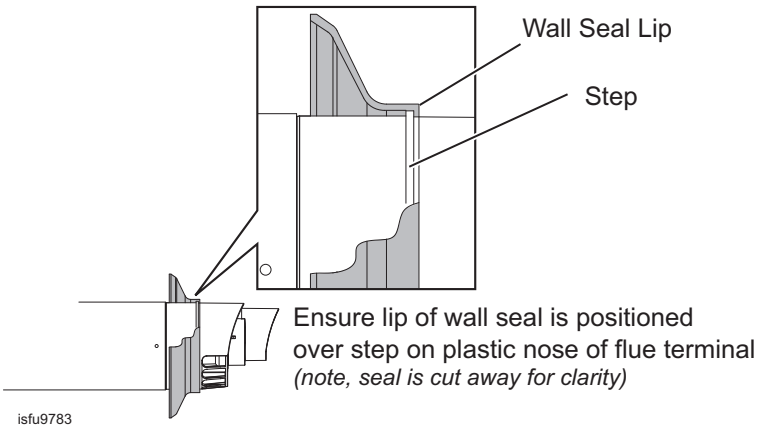

FIGURE 2

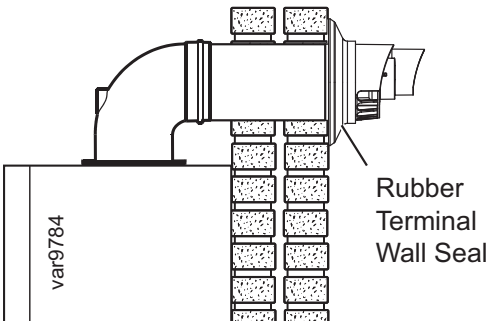

31A SETTING THE FLUE - REAR **Wall thicknesses of 192 to 407mm**

Notes.

a. *If using the extension ducts go to Frame 34.*

1. Measure and note wall thickness X. Refer to Frame 27.

2. Add 145mm (5½") to dimension X and set telescopic flue length as indicated in drawing.

3. Using a 3.5mm drill bit, drill one hole in outer air duct taking care not to pierce plastic inner flue.

4. Fix to length using self tappers provided.

5. Seal out air duct using the tape provided.

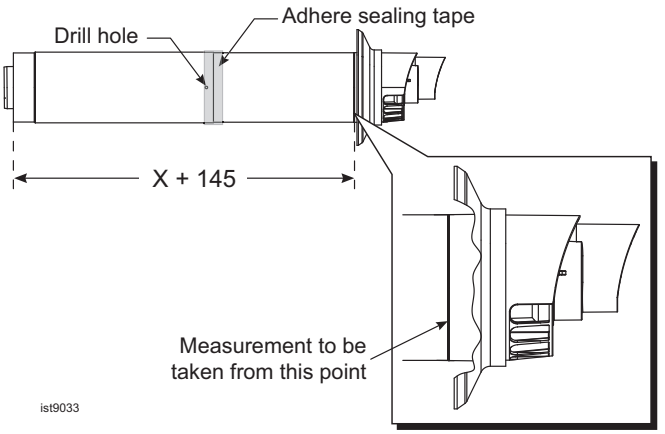

31B SETTING THE FLUE - SIDE **Wall thicknesses of: RHS 114 to 248mm, LHS 114 to 372mm**

a. *If using the extension ducts go to Frame 34.*

b. *For shorter flue lengths use non-telescopic B Pack.*

1. Measure and note wall thickness R or L (this measurement differs for LH and RH flues). Refer to Frame 27.

For RH flues, note that a flue extension may be needed.

For RH Side

2a. Add 300mm (11 7/8") to dimension R and set telescopic flue length as indicated in drawing.

For LH Side

2b. Add 175mm (6 7/8") to dimension L and set telescopic flue length as indicated in drawing.

3. Using a 3.5mm drill bit, drill one hole in outer air duct taking care not to pierce plastic inner flue.

4. Fix to length using self tappers provided.

5. Seal out air duct using the tape provided.

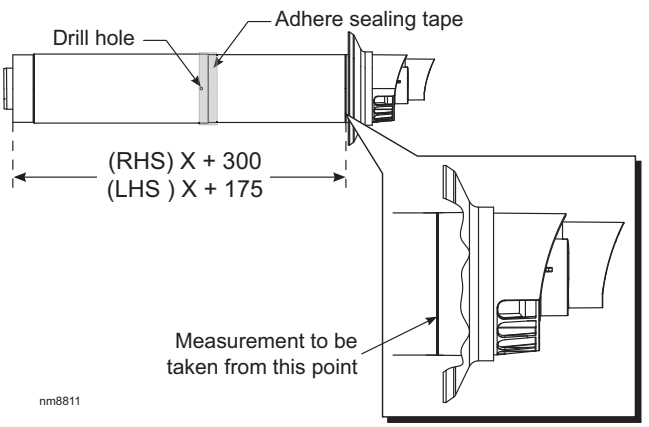

32 CONNECTING THE FLUE TO THE BOILER

Note.

a. *BEFORE fitting the flue turret, fill the condensate trap within the boiler by pouring a cupful of water into the flue outlet A.*

b. *Take care to ensure that the water is only poured into the flue outlet, and does not spill into the boiler casing.*

1. Insert the flue assembly through the prepared hole in the wall. Push through and pull back to seal against outside wall face.

2. Locate the flue turret on the top of the boiler, ensuring that the turret gasket is in place. Also ensure the turret is located concentric with the flue aperture on the boiler top panel. Check that the flue seal (A) located in the top of the flue manifold is secure and giving an effective seal.

3. Locate the flue into the turret.

4. Secure the flue turret on top of the boiler by inserting the open ends of the turret clamp under the 2 studs and fixing it in the middle with the single M5 x 10mm pozi-hex screw provided.

5. Flues over 1 metre long.

Fix the flue support bracket to the wall, using the wall plug and wood screw. For standard installations use the short wood screw.

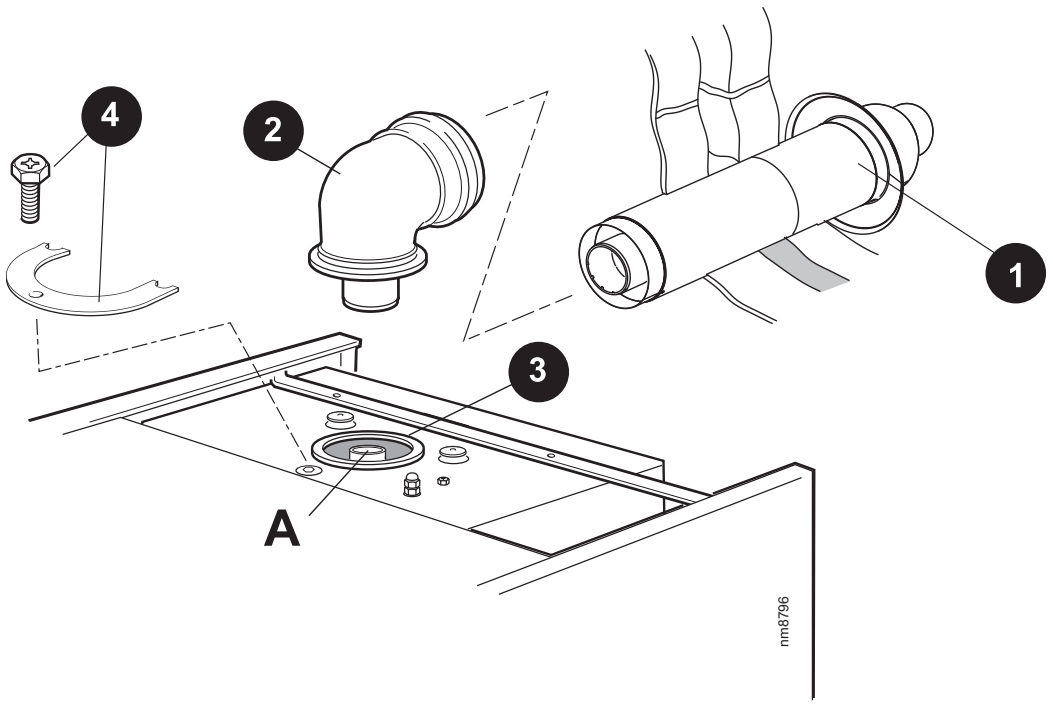

33 FLUE EXTENSION DUCTS - For flue lengths greater than 595mm

Pack D Flue extension duct kit contents.

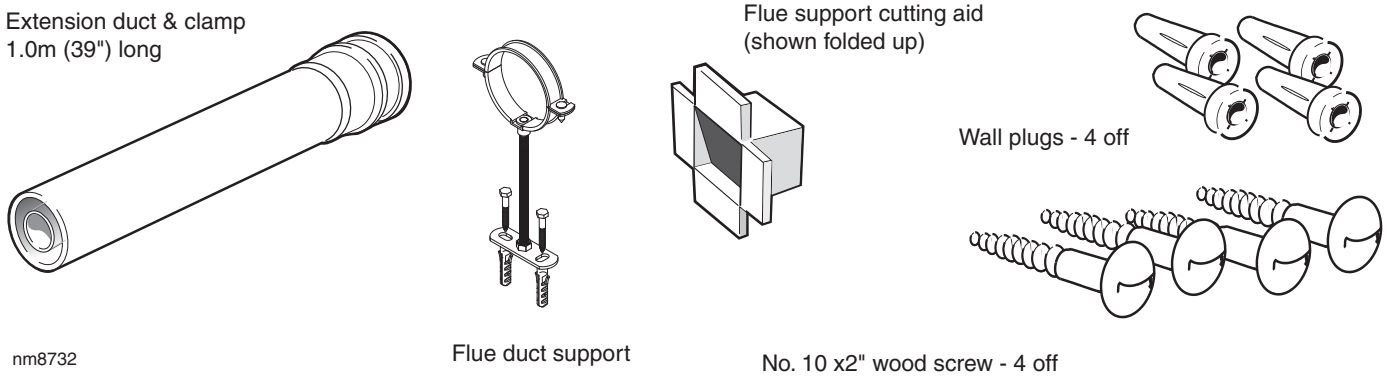

34 FLUE EXTENSION DUCTS - continued

Use a maximum of 6m extended flue ONLY

General arrangement

1. A ***maximum*** of 6 extension ducts (one suitably cut) plus the standard flue duct may be used together.
2. Flue extensions of greater length than 1m (39") should be supported with the bracket provided, suitably adjusted - refer to Frame 33.
3. Only use water as a lubricant during assembly. Do not use mineral based oils.

Note.
Side flue shown

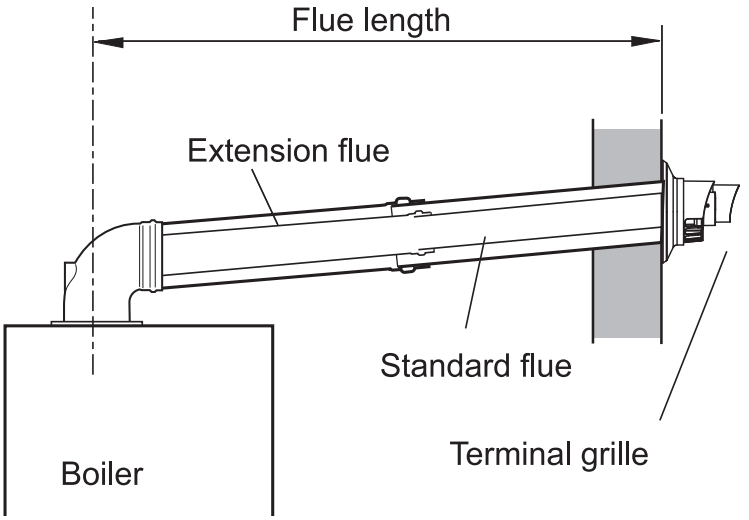

35 FITTING THE KIT

Because of the flexibility of the telescopic flue terminal it is not always necessary to cut an extension pack.

1. Measure the total flue length from the centre of the boiler outlet to the outside wall.
2. Subtract 70mm from this dimension.
3. Subtract 950mm for each 'D' pack to be used.
4. If the remainder Y is 300mm - 525mm this can be taken up by the adjustment in the telescopic flue.
5. If the remainder Y is 525mm - 950mm it will be necessary to cut a 'D' pack to Y - 400mm.
6. If the remainder Y is under 300mm, shorten the previous 'D' pack to 400mm and adjust the telescopic terminal.
7. Measure and mark the length on the flue, to ensure a square cut mark the flue all the way around and cut to length.

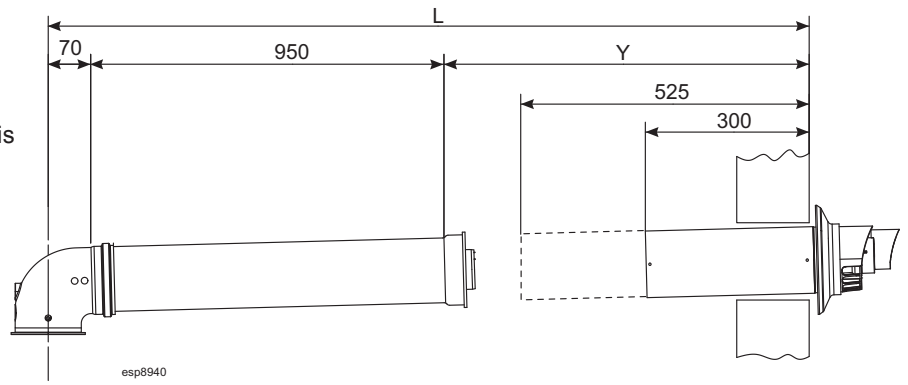

36 FITTING THE OPTIONAL ROOF FLUE KIT (Flat or Pitched)

Note.
A flat or pitched roof flashing plate (not supplied) is required before proceeding with the installation of this kit.

This kit is suitable for both flat and pitched roof terminations, using a concentric flue to run vertically from the top of the boiler and terminating above roof level.

Connection to the top of the boiler is made using both a separately supplied vertical connector and a 80/125 adaptor.

WEATHER PROOFING

Where the flue passes through the roof line an adequate seal must be made. This is achieved by using either:

- Flat roof weather collar

or

- Universal weather collar.

ACCESSORIES

Flue Duct Extension Kits are available for flue lengths extending beyond 1m. These packs contain 1m extension ducts and may be cut to the desired length.

If the offset vertical option is used an elbow Kit is required. For a full accessories list refer to page 7, Optional Extras and Frame 32, Flue Arrangement.

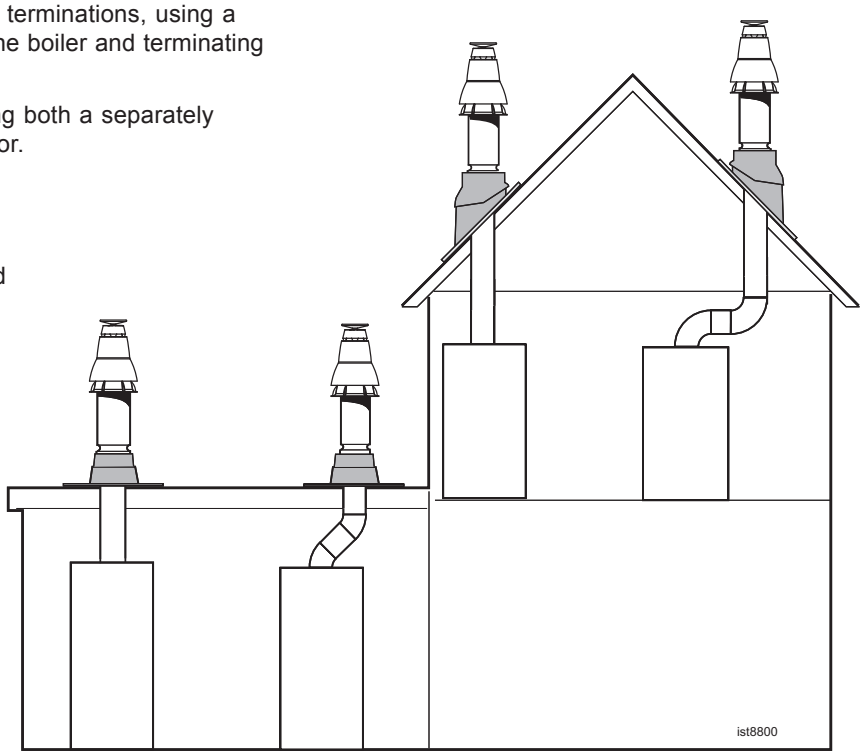

37 ROOF FLUE KIT CONTENTS / OPTIONS

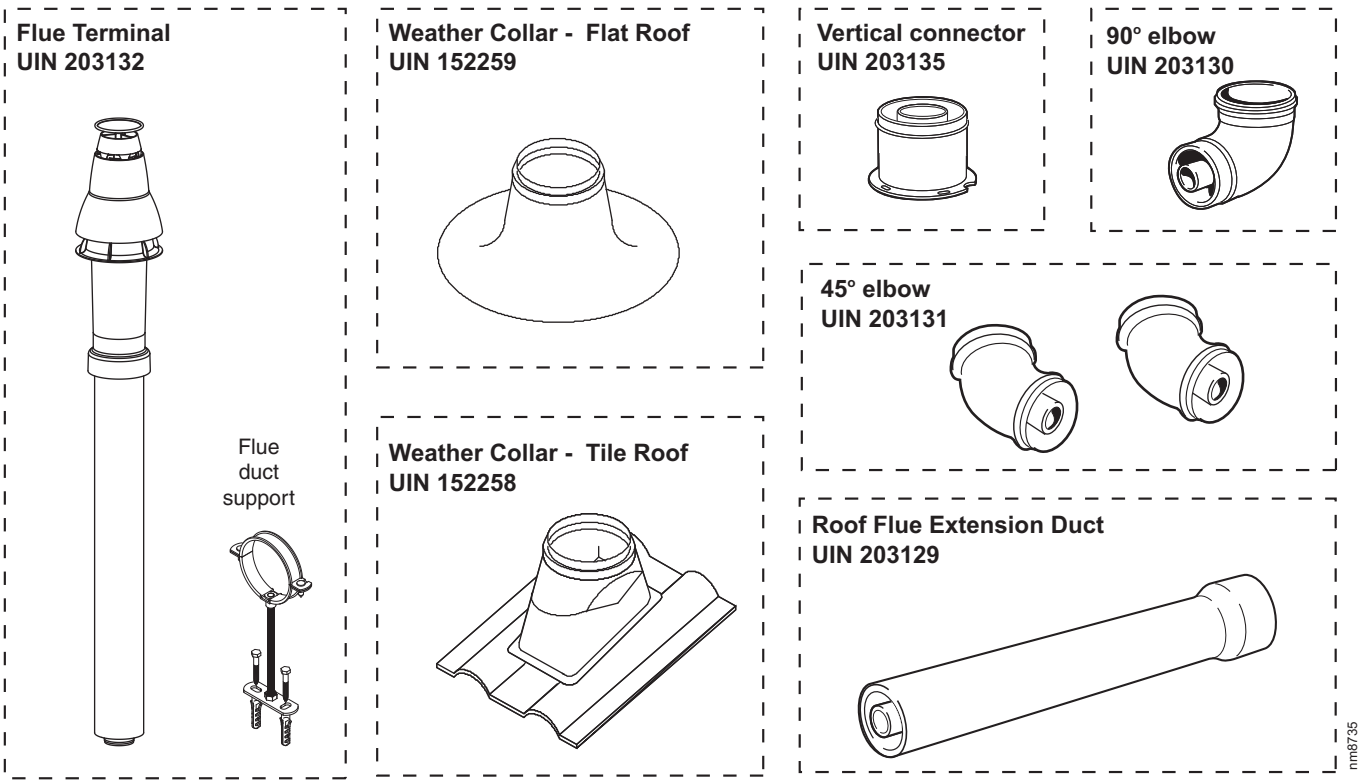

38 FLUE TERMINAL POSITION

The terminal should be positioned so that products of combustion can safely disperse at all times.

Pluming may occur at the termination so, where possible, terminal positions where this could cause a nuisance should be avoided.

Minimum dimensions are shown below

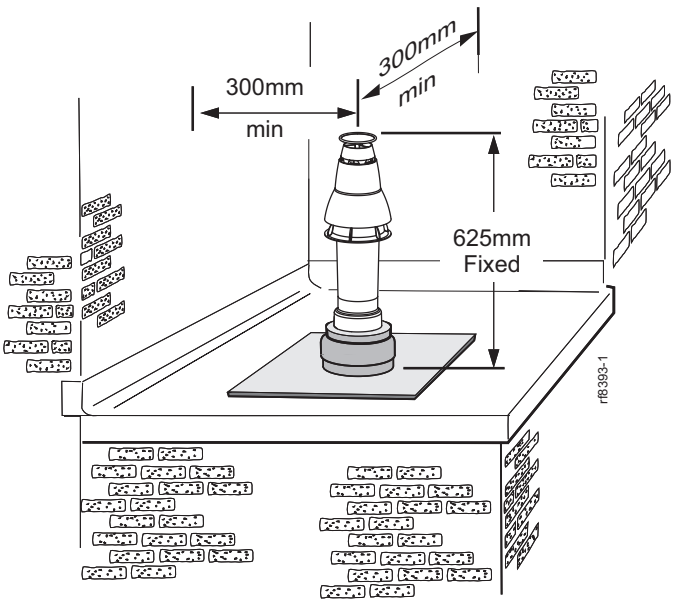

Flat roof - with structure

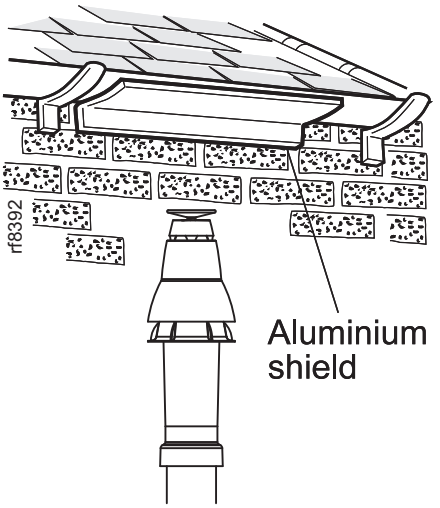

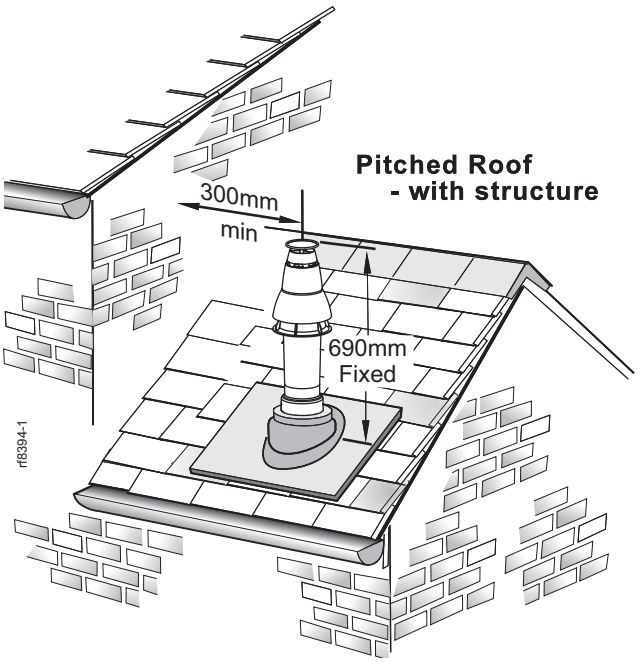

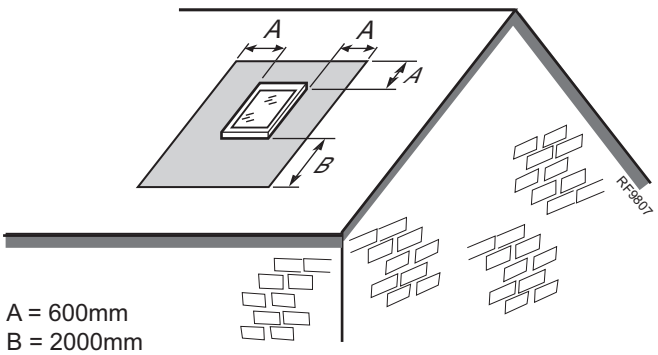

A = 600mm
B = 2000mm

The flue terminal shall not penetrate the shaded area of the roof

Terminal Position	Minimum Dimension
Directly below an opening, air brick, windows, etc.	300 mm
Below plastic / painted gutters	300 mm
Painted surface	300 mm
Below eaves or balcony	500 mm
Below velux window	2000 mm
Above or side of velux window	600 mm

39 FLUE ARRANGEMENT

Note.

The equivalent flue length resistance of the elbow kits are:

90° elbow kit = 1m

45° elbow kit = 0.6m

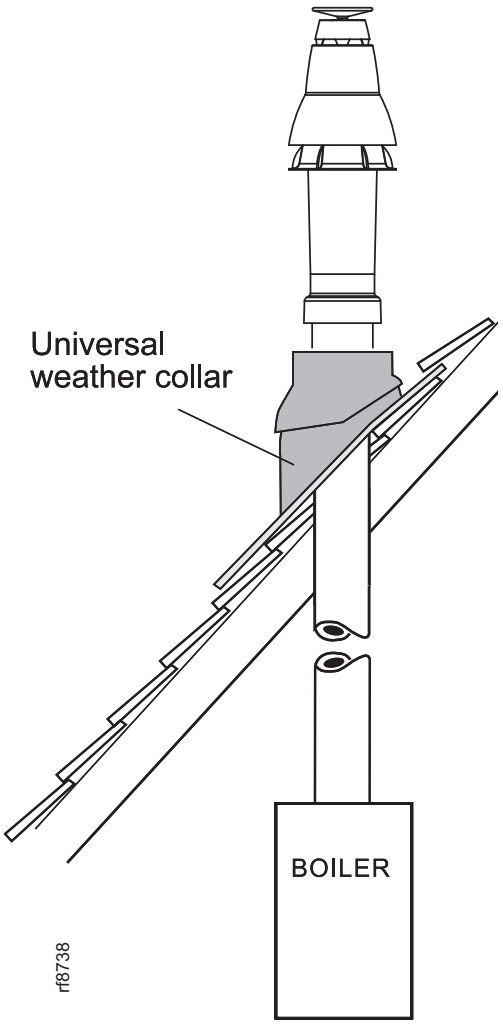

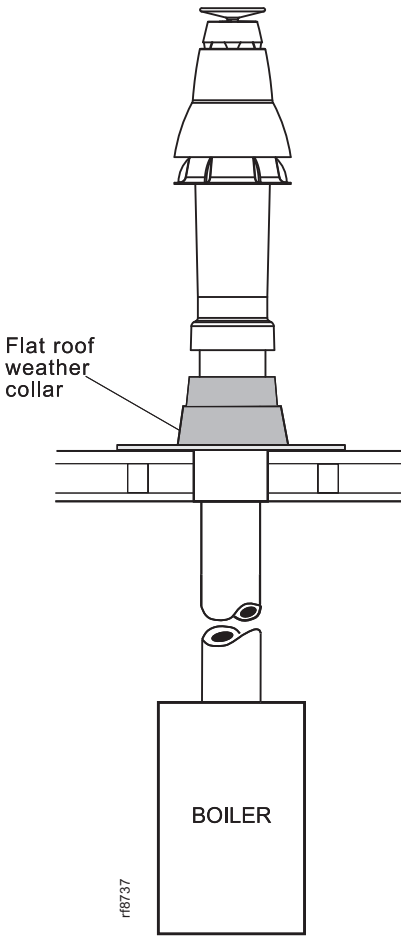

40 ASSEMBLING THE ROOF FLUE KIT

Determine the correct height that the flue should terminate above the roof. If after calculating or measuring the overall flue height from the top of the boiler, it is necessary to cut both pipes of assembly A, then ensure they are cut equally leaving the inner flue tube longer than the outer air tube as supplied.

Ensure the cut pipe ends are free from any burrs.

1. Position the roof flashing plate (supplied separately) over the hole cut in the roof and insert flue terminal from the roof end.

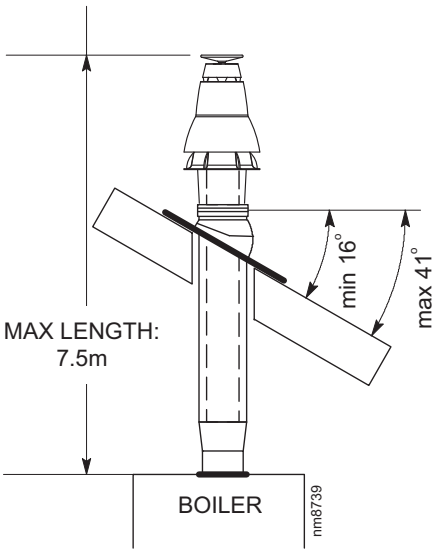

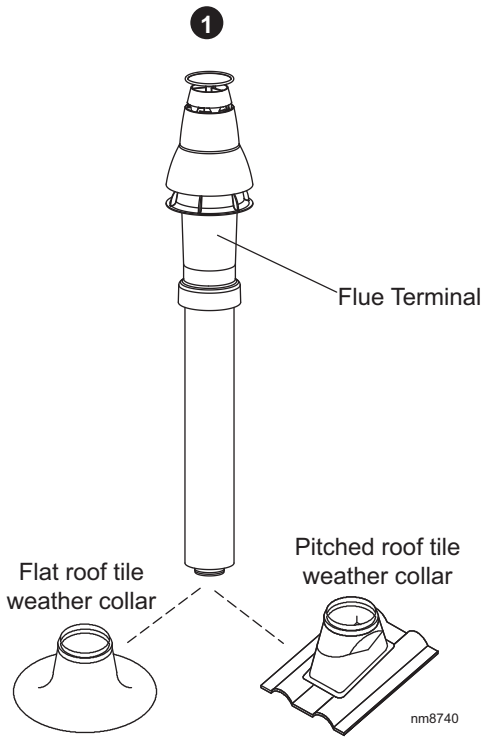

2. Push fit the vertical connector (supplied separately) into the boiler flue connection and retain with the turret clamp and securing screw (supplied with the boiler). **ENSURING THE GASKETS IN THE BOILER FLUE OUTLET ARE CORRECTLY FITTED.**

3. "Push" fit extension duct (if required (supplied separately)) into vertical connector.

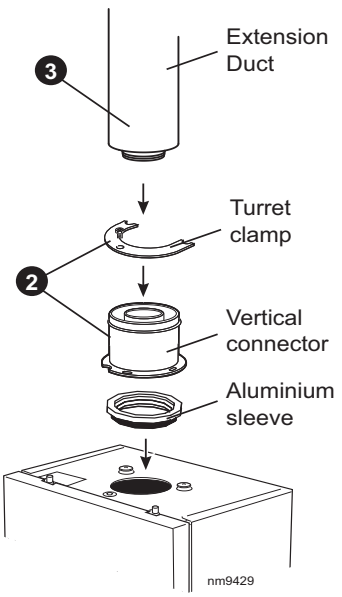

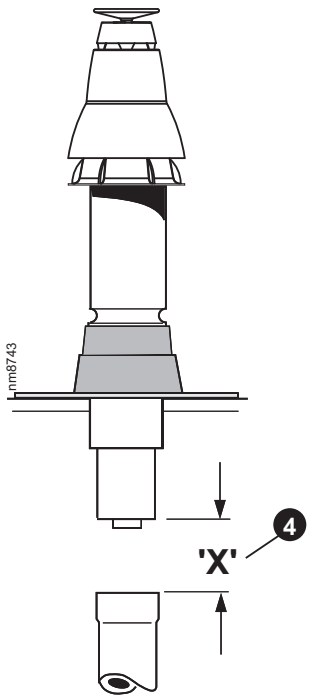

4. If the last extension duct requires cutting, measure 'X', the distance (outer ducts), between the duct and the terminal and add 100 mm to this dimension. This gives the length of the last extension duct.

   Note. *Check the position of the inner flue duct relative to the outer duct on the assembled extension duct(s) and ensure the terminal flue duct is cut longer than the air duct to ensure engagement in the final flue duct seal.*

5. Finally ensure the roof flashing plate is correctly sealed to the roof.

41 FILLING

Central Heating
Refer to system requirements Frame 5.

1. Remove the boiler sealing panel. Refer to Frame 56.
2. Ensure that the CH isolating valves are open.
3. Fill and vent the system. Check for water soundness.

IMPORTANT - when filling:

a. Move lever on valve across to the manual position (mid position) for filling.
b. The cap on the automatic air vent (refer to Frame 48) MUST be loose at all times.
When filling, there may be a slight water leak from the vent therefore electrical connections should be protected.
c. Open manual air vent above the diverter valve and bleed any air from the diverter valve.
d. Bleed any air from the pump and ensure that it is free to rotate.
   i. Remove the vent plug
   ii. Using a screwdriver, rotate the shaft several times
   iii. Replace the vent plug.
   Note. *Some slight water leakage will occur.*

Domestic Hot Water

1. Fully open all DHW taps and ensure that water flows freely from them.
2. Close all taps except the one furthest from the boiler.
3. Turn off the DHW tap.

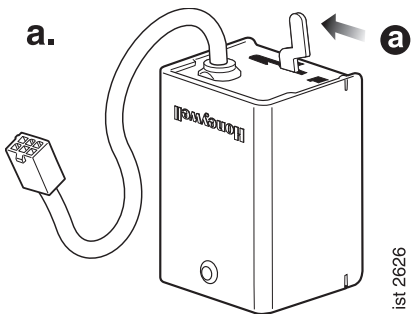

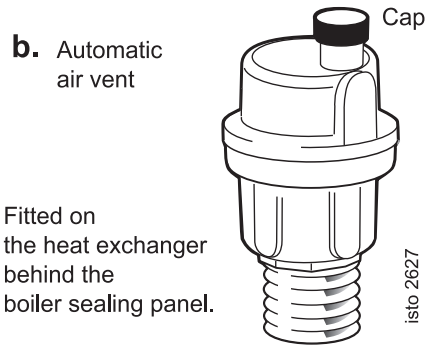

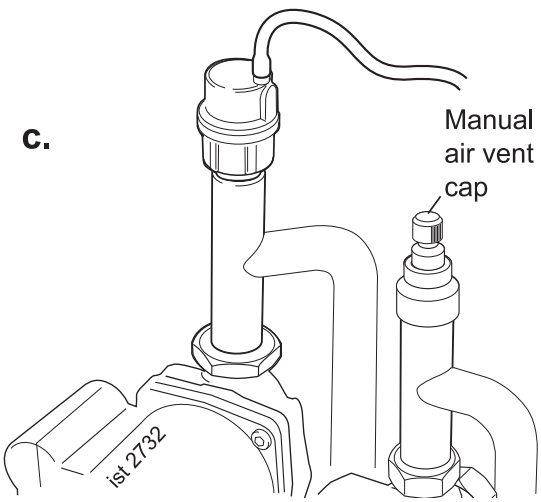

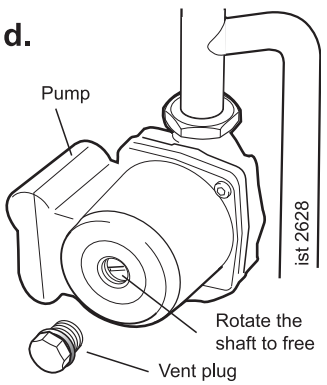

42 ELECTRICAL CONNECTIONS

WARNING. This appliance MUST be earthed.

Boiler water connection
A mains supply of 230 V ~ 50 Hz is required.

The fuse rating should be 3A.

Wiring external to the boiler MUST be in accordance with the current I.E.E. (BS7671) Wiring Regulations and any local regulations.

All external controls and wiring must be suitable for mains voltage.

Wiring should be 3 core PVC insulated cable, not less than 0.75 mm^2 (24 x 0.2mm), and to BS 6500 Table 16. For IE reference should be made to the current ETCI rules for electrical installations.

Connection must be made in a way that allows complete isolation of the electrical supply such as a double pole switch having a 3mm (1/8") contact separation in both poles, or a plug and socket, serving only the boiler and system controls. The means of isolation must be accessible to the user after installation.

Immersion heater
Note.
An immersion heater is supplied fitted to the cylinder and is intended for use as a back up heat source of DHW. Wiring of this immersion heater Must be completely separate from the boiler electrical connections.

1. Wire the heater through a double-pole switch or controller, having contact separation of at least 3mm, using a cable size of at least 1.5sq. mm flexible cable, 85 deg.C rubber insulated HOFR Sheathed, complying with BS6141 Table 8. It MUST be fully earthed. Ensure all terminal connections are securely made. Do not however use excessive force when tightening terminals.
2. BEAB Approval will only to this heater if the following thermostats are used: Series AD, BD, CD. Control thermostat-Diamond HWT Series of Sunvic VKL Series. Resettable master thermostat-Sunvic Series VKL and Thermtec SK. Series AF, BF, CF. Thermowatt type RTS-3 thermostat.
3. In the event of the manually resettable cut-out operating, isolate the heater from the mains supply before removing the terminal cover. Investigate and identify the cause for the operation of this cut-out. Then rectify the fault before manually resetting the master thermostat, replace the terminal cover securely before re-energising the heater. If the fault re-occurs, replace the thermostats within the heater.

43 INTERNAL WIRING

Note. *Access to wiring centre can be improved by first removing control fascia panel. Refer to Frames 53 and 54 for detail.*

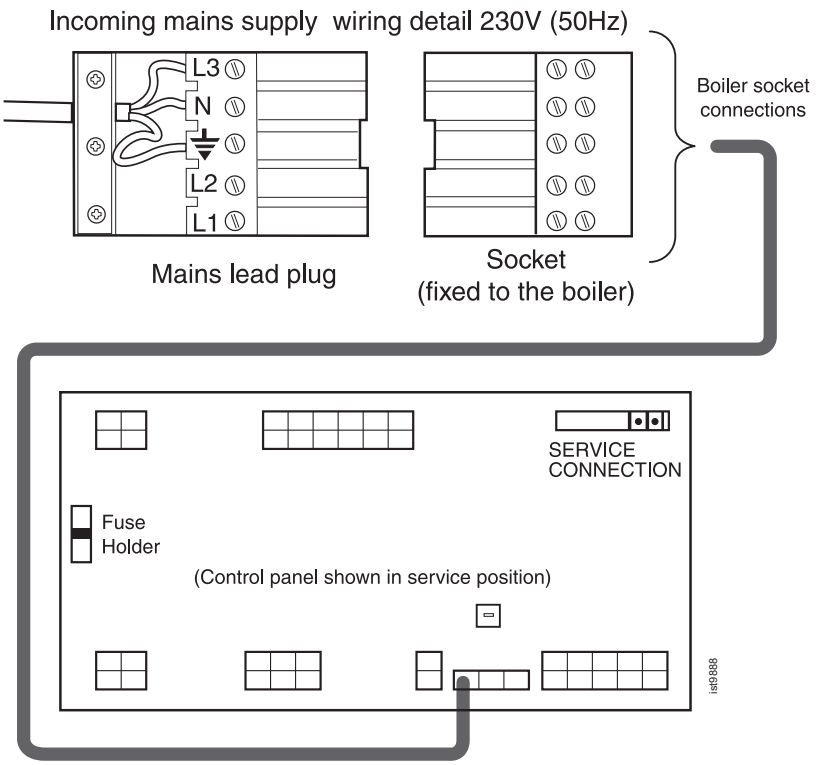

1. Route the mains cable into the bottom rear centre of the boiler.
2. Wire the permanent live supply into the 5-way remote plug terminals, L3, N & ⏚.

   Note. *Ensure that the lengths of the current carrying conductors are shorter than the earth conductor so that if the cable slips in its anchorage the current carrying conductors become taut before the earth conductor.*
3. Wire the room thermostat switched live into terminal L2.
4. Wire any frost thermostat switched live into L1.
4. Secure the mains lead with the cable clamp.
5. Reconnect the mains lead plug. Ensure it is fully located.

44 EXTERNAL ELECTRICAL CONTROLS

Wiring External to the Boiler

The fuse rating should be 3A.

Wiring external to the boiler MUST be in accordance with the current I.E.E. (BS.7671) Wiring Regulations and any local regulations. For IE reference should be made to the current ETCI rules for electrical installations.

Room Thermostat

If the thermostat has a neutral connection, use it (it provides for more energy efficient operation by reducing switching temperature differentials).

Frost Protection

If parts of the pipework run outside the house or if the boiler will be left off for more than a day or so then a frost thermostat should be wired into the system.

The frost thermostat should be sited in a cold place but where it can sense heat from the system.

Note.
If the boiler is installed in a garage it may be necessary to fit a pipe thermostat, preferably on the return pipework.

Wiring should be as shown, with minimal disturbance to other wiring of the controls.

Designation of the terminals will vary but the programmer and thermostat manufacturers' leaflets will give full details.

Diagram A shows an application to boilers fitted with a room thermostat only.

Earths are not shown for clarity but must never be omitted.

External Programmer

The built in programmer may be remotely in order to give more convenient access to the boiler user controls and display.

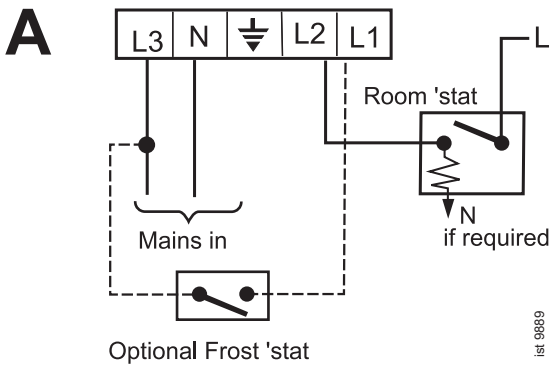

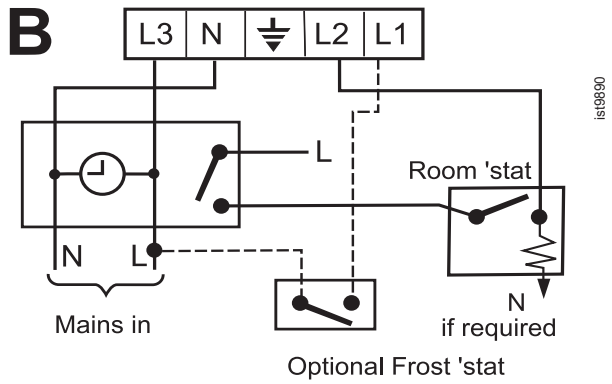

45 PICTORIAL WIRING DIAGRAM

LEGEND

- **b** - blue.
- **bk** - black.
- **br** - brown.
- **r** - red.
- **y** - yellow.
- **w** - white.
- **y/g** - yellow/ green.
- **gy** - grey.
- **or** - orange.
- **v** - violet

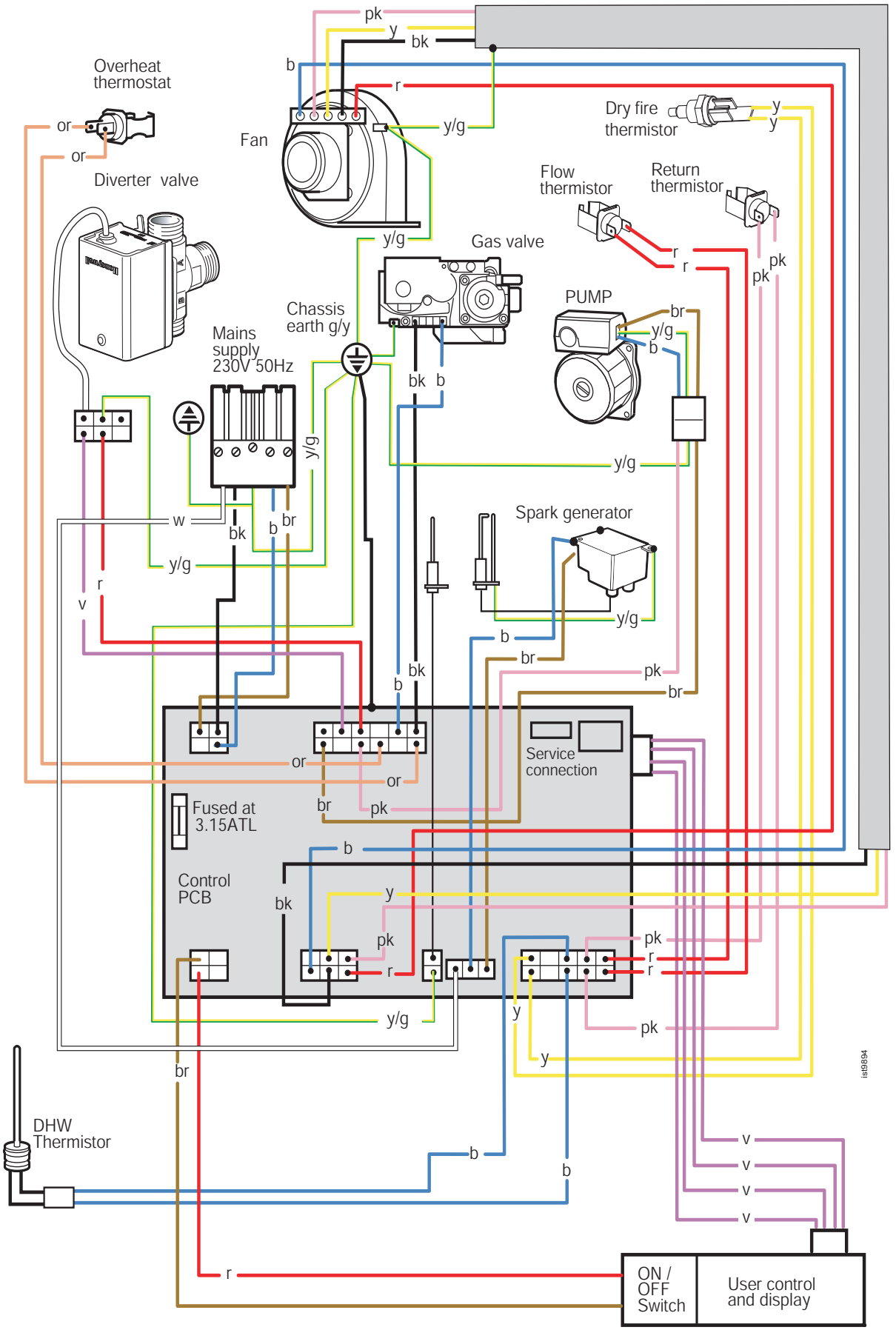

46 FUNCTIONAL FLOW WIRING DIAGRAM

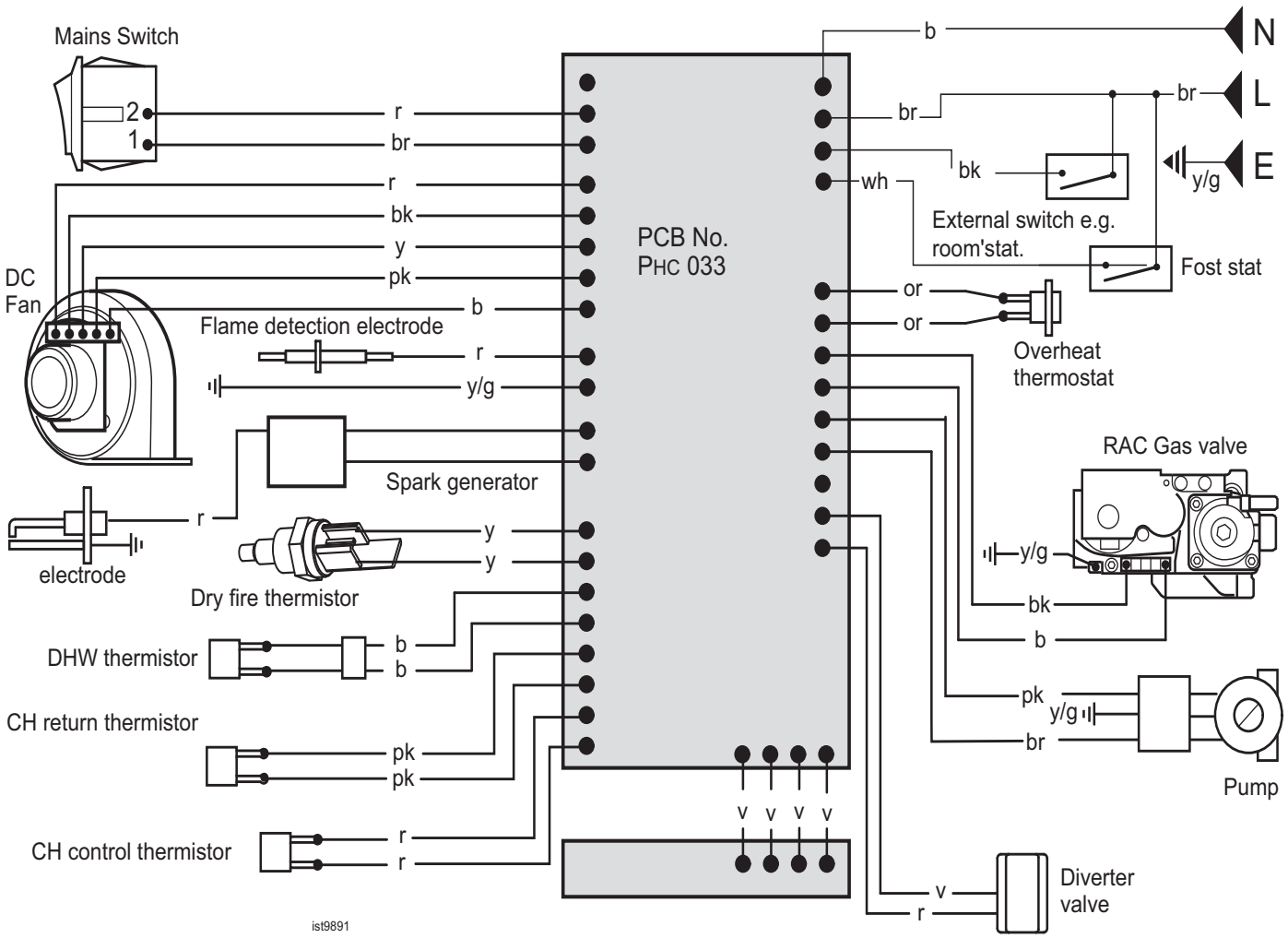

LEGEND

b - blue	**r** - red	**y/g** - yellow/green	**v** - violet
bk - black	**y** - yellow	**gy** - grey	**pk** - pink
br - brown	**w** - white	**or** - orange	

47 COMMISSIONING AND TESTING

A. Electrical Installation

1. Checks to ensure electrical safety should be carried out by a competent person.
2. ALWAYS carry out the preliminary electrical system checks, i.e. earth continuity, polarity, resistance to earth and short circuit, using a suitable test meter.

B. Gas Installation

1. The whole of the gas installation, including the meter, should be inspected and tested for tightness and purged in accordance with the recommendations of BS. 6891. In IE refer to IS 813:2002.
2. Purge air from the gas installation by approved methods only.
3. Re-tighten the union and test for gas tightness.

WARNING. **Whilst effecting the required gas tightness test and purging air from the gas installation, open all windows and doors, extinguish naked lights and *DO NOT SMOKE.***

48 INITIAL LIGHTING

LEGEND

A. Air vent.
B. Inlet pressure test point.
C. CH return isolating valve.
D. Mains water inlet isolating valve.
E. Gas service cock.
F. DHW outlet.
G CH flow isolating valve.
H. Pressure gauge.
L. Display.
M. Select button.
O. Boiler On/Off switch.

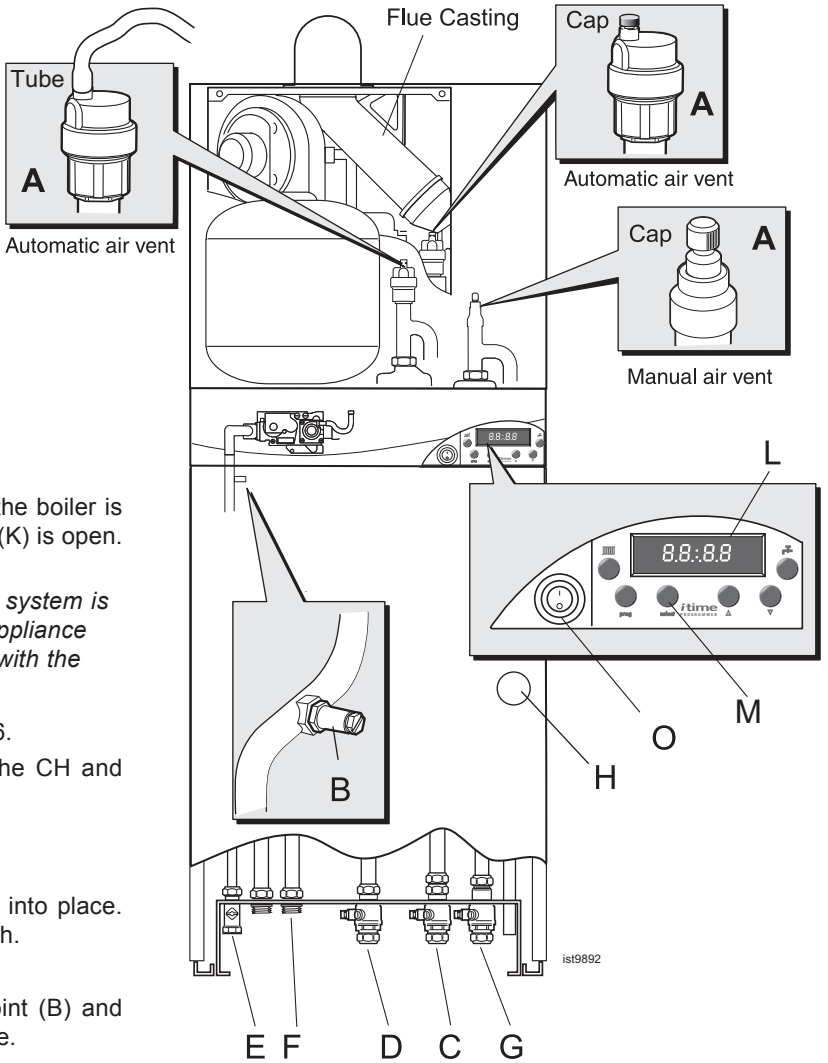

1. Check that the system has been filled and that the boiler is not airlocked. Ensure the automatic air vent cap (K) is open.

Note.
It is important the burner is not operated before the system is fully vented of air. If it is necessary to operate the appliance pump to assist venting of the air this must be done with the gas service cock turned off.

2. Refit the boiler sealing panel. Refer to Frame 56.
3. Check that the drain cock is closed and that the CH and DHW isolating valves (D,C and G) are OPEN.
4. Check that the electrical supply is OFF.
5. Check that the boiler on/off switch (O) is off.
6. Carefully align the user control and push gently into place. Secure with the single screw located underneath.
7. Check that the gas service cock (E) is OPEN.
8. Slacken the screw in the inlet pressure test point (B) and connect a gas pressure gauge via a flexible tube.
9. Switch the electricity supply ON and check all external controls are calling for heat.
10. **CENTRAL HEATING**
    Switch the boiler on/off switch (O) to ON. The boiler control should now go through its ignition sequence until the burner is established.
11. If the boiler does not light after 3 attempts the fault code “LF” will be displayed, Press the select button (M) and the boiler will repeat its ignition sequence.

    When the burner is established the flame 'Burner On' indicator will be illuminated, the LCD display will show the radiator status symbol.

DOMESTIC HOT WATER

12. With the boiler firing, set the DHW to ON and fully open a DHW tap.

    The boiler should continue to run and the LED display should show status .
13. Ensure that with the boiler operating the dynamic gas pressure is able to obtain maximum output. Refer to Table 2.

    For additional gas supply information refer to ‘Gas Supply’ on page 9.

IMPORTANT

The gas input to the burner is regulated by the gas valve according to the air flow produced by the fan. It is NOT user-adjustable. Any interference to sealed settings on the gas valve will adversely affect operation and render our warranty void.

14. Turn off the DHW tap.
15. Set the boiler on/off switch (O) to OFF.
16. Remove the pressure gauge and tube. Tighten the sealing screw in the pressure test point. Ensure a gas tight seal is made.
17. Fit the boiler front and bottom panels.

The itime programmer display
The LCD display has a number of indicators to show the operation of the boiler. In stand-by mode there are no additional indicators other than the time of day. Each channel, CH and DHW, status is shown as OFF, ON, TIMED or ADVANCE (see users guide). In a timed on period the status of the boiler is:

Radiator symbol indicates CH demand.

Tap symbol indicates DHW or preheat demand.

Flame symbol indicates burner status.

In error conditions the following indicates the error:

Blocking error is proceeded by “H” on the LCD display.

Locking out error is proceeded by a “L” on the LCD display.

49 GENERAL CHECKS

Make the following checks for correct operation in:

DOMESTIC HOT WATER (DHW) MODE

1. With no call for CH or DHW the boiler should fire for a short period to preheat the storage tank.

   The LCD display symbol will be:

   returning to none when the burner switches off.

   Notes.

   a. *If no DHW is drawn off, the boiler will fire periodically for a short time, to maintain the storage tank temperature.*

   b. *DHW pre-heat will be inhibited during programmed DHW off periods.*

2. Fully open all DHW taps in turn and ensure that water flows freely from them.

   The LCD display symbols will be:

   then when the burner lights.

3. Close all taps except the furthest one from the boiler and check that the boiler is firing at maximum rate.

   This is factory set to give a DHW temperature rise of approximately 35°C at the flow rate stated on page 6 under "operation".

4. Reduce the DHW draw-off rate to about 3 l/min (0.7gpm) and check that the boiler modulates to deliver DHW at approximately 65°C.

5. Close the DHW tap and check that the main burner extinguishes. The pump should overrun for a few seconds and the display symbols should read:

   When the pump stops the display symbols clear

Note. *On systems in excess of 2 bar inlet pressure a water pressure governor may be required to prevent water noise.*

CENTRAL HEATING (CH) & DOMESTIC HOT WATER (DHW) MODE.

1. Ensure that the CH external controls are calling for heat.

   The LCD display symbols should be:

2. Fully open a DHW tap and check that hot water is delivered.

   The LCD display symbols should be:

3. **Gas Rate**

   Check the boiler gas rate when the boiler is at full DHW output.

   Check at the gas meter, with no other appliance in use. Refer to Table 3 for gas rates.

4. Close the DHW tap. The burner should go off and the pump continue to run.

   The LCD display symbol should be: then

   After 15 seconds the burner should relight, to supply central heating.

   The LCD display symbols should be:

5. Set the central heating external controls to OFF. The burner should go off and the pump continue to run for a few seconds.

   The LCD display symbols should be: returning to none when the pump stops.

6. Check the correct operation of the programmer (if fitted) and all other system controls. Operate each control separately and check that the main burner responds.

WATER CIRCULATION SYSTEM

1. With the system COLD, check that the initial pressure is correct to the system design requirements.

   For pre-pressurised systems, this should be 1.0 bar.

2. With the system HOT, examine all water connections for soundness. The system pressure will increase with temperature rise but should not exceed 2.5 bar.

3. With the system still hot, turn off the gas, water and electricity supplies to the boiler and drain down to complete the flushing process.

Note. *A flushing solution should be used during the flushing procedure. Flushing solutions: Fernox Superfloc, Sentinel X300 (new systems) or X400 (existing systems). Refer to Frame 6.*

4. Refill and vent the system, add inhibitor (see Frame 6), clear all air locks and again check for water soundness. Affix the water treatment warning label, supplied in the hardware pack, in a *prominent position* on the system, to prevent the use of incorrect water treatment additives.

5. Reset the system initial pressure to the design requirement.

6. Balance the system. Refer to Frame 5.

7. Check the condensate drain for leaks and check that it is discharging correctly.

8. Finally, set the controls to the User's requirements.

Note. *The pump will operate briefly as a self-check once every 24 hours in the absence of any system demand.*

WATER TEMPERATURES

Temperatures can be selected via the CH and DHW temperature settings (see users guide).

Setting	CH Flow Temp °C (°F)	DHW Outlet Temp °C (°F)
Max	82 (180)	65 (150)
Min	30 (86)	42 (110)

50 HANDING OVER

After completing the installation and commissioning of the system the installer should hand over to the householder by the following actions:

1. Hand the User Instructions to the householder and explain his/her responsibilities under the relevant national regulations.

2. Explain and demonstrate the lighting and shutting down procedures.

3. The operation of the boiler and the use and adjustment of all system controls should be fully explained to the householder, to ensure the greatest possible fuel economy consistent with the household requirements of both heating and hot water consumption.

   Advise the User of the precautions necessary to prevent damage to the system and to the building, in the event of the system remaining inoperative during frosty conditions.

4. Explain the function and the use of the boiler heating and domestic hot water controls.

5. Explain the function of the boiler fault mode.

   Emphasise that if a fault is indicated, the boiler should be turned off and a registered local heating installer consulted. In IE contact a competent person.

6. Explain and demonstrate the function of time and temperature controls, radiator valves etc., for the economic use of the system.

7. A programmer is fitted so draw attention to the Users Instructions and hand them to the householder.

8. **Loss of system water pressure**

   Explain that the pressure gauge inside the lower door indicates the central heating system pressure and that if the normal COLD pressure of the system is seen to decrease over a period of time then a water leak is indicated. In this event a registered local heating installer should be consulted.

WARNING.

Do not fire the boiler if the pressure has reduced to zero from the original setting.

9. benchmark COLLECTIVE MARK THE MARK OF QUALITY FOR THE INSTALLATION, COMMISSIONING AND SERVICING OF DOMESTIC HEATING AND HOT WATER SYSTEMS

   After installation and commissioning please complete the Benchmark Commissioning Checklist before handover to the customer.

   For IE, it is necessary to complete a "Declaration of Conformity" to indicate compliance to I.S.813:2002.

10. **IMPORTANT**
    A comprehensive service should be carried out ANNUALLY.

    Stress the importance of regular servicing by a Gas Safe Registered Engineer. In IE servicing work must be carried out by a Registered Gas Installer (RGII).

    As the installer you may wish to undertake the service contract yourself or alternatively offer to the customer the benefits of the Ideal Care Scheme details of which are outlined in the householder pack supplied with this boiler.

51 SERVICING SCHEDULE

For the very latest copy of literature for specification and maintenance practices, visit our website www.idealboilers.com, where you will be able to download relevant information. N.B. Technical Bulletins are also available on our website.

WARNING. **Always turn OFF the gas supply at the gas service cock, and switch OFF and disconnect the electricity supply to the appliance before servicing.**

To ensure the continued safe and efficient operation of the appliance it is recommended that it is checked at regular intervals and serviced as necessary. The frequency of servicing will depend upon the installation condition and usage but should be carried out at least annually.

It is the law that any service work must be carried out by a Gas Safe Registered Engineer. IN IE service work must be carried out by a Registered Gas Installer (RGII).

BOILER MODULE

1. Remove the upper and lower front panels. Refer to Frame 53.
2. Light the boiler and carry out a pre-service check, noting any operational faults.
3. Relight the boiler and operate for at least 10 minutes.
4. Clean the main burner.
5. Clean the heat engine and 'S' trap.

Note. *This must be done with the heat engine and deposits in a dry condition. Refer to Frame 59.*

6. Check the main injector for blockage or damage.
7. Wherever possible remove and clean the condensate trap (refer to Frame 59) and check the drain for blockage.
8. Check that the flue terminal is unobstructed and that the flue system is sealed correctly.
9. If for any reason, the condensate trap has been removed. Ensure that the trap is re-filled with water before re-assembly.
10. Complete the service section in the Benchmark Commissioning Checklist.

TANK MODULE

Note. *The unvented DHW cylinder must be inspected and serviced annually.*

11. Release system pressure via relief valve and check expansion vessel pre-charge pressure is between 1.5 to 2.5 bar. Adjust if required and top up system to same pressure.
12. With no water pressure on the system, check and if necessary adjust the secondary expansion vessel pressure to approximately 2 bar.

Note. *Vessel pressure can not be accurately set with water pressure in system.*

13. Partially open vent on top of heat exchanger and release any trapped air. Partially unscrew cap on the air vent (on top of diverter valve) and release air.
14. Remove and clean the DHW inlet filter. Refer Frame 60.
15. Check that the discharge from both the expansion valves and the temperature and pressure relief valve on the tank go to waste. The pipe is clear and both valves close.
16. Check all joints for leaks

GENERAL

The servicing procedures are covered more fully in Frames 51 to 64 and MUST be carried out in sequence.

Note.
In order to carry out either servicing or replacement of components the boiler front panels, sealing panel and facia panel must be removed.

IMPORTANT.

After completing the servicing or exchange of components always test for gas tightness.

When work is complete the sealing panel MUST be correctly refitted, ensuring that a good seal is made.

17. Check the condition of the combustion chamber insulation. Any cracked, damaged or displaced pieces should be replaced. Ionisation probes are a servicable component and require inspecting annually. Replace if distorted.
18. Check the gas consumption.
19. Connect a suitable gas analyser to the sampling point on the top of the boiler or into the flue terminal if access is possible (optional test).
    For correct boiler operation, the CO/CO_2 content of the flue gas should not be greater than 0.004 ratio.
20. Complete the service section in the Benchmark Commissioning Checklist.

Do NOT OPERATE the boiler if the sealing panel is not fitted

52 SAMPLING POINT

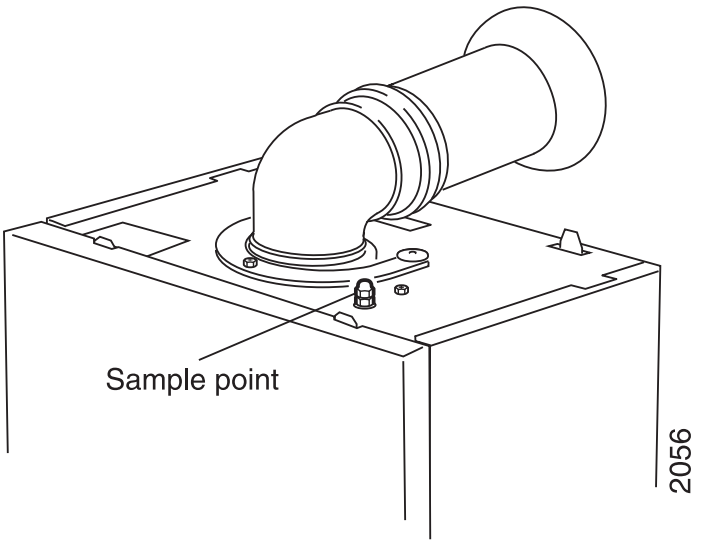

53 BOILER FRONT PANEL REMOVAL

1. Remove the 2 securing screws.
2. Pull the top panel forward at the top and lift to disengage it from the locating pins.
3. Pull the bottom panel forward off the locating pins.

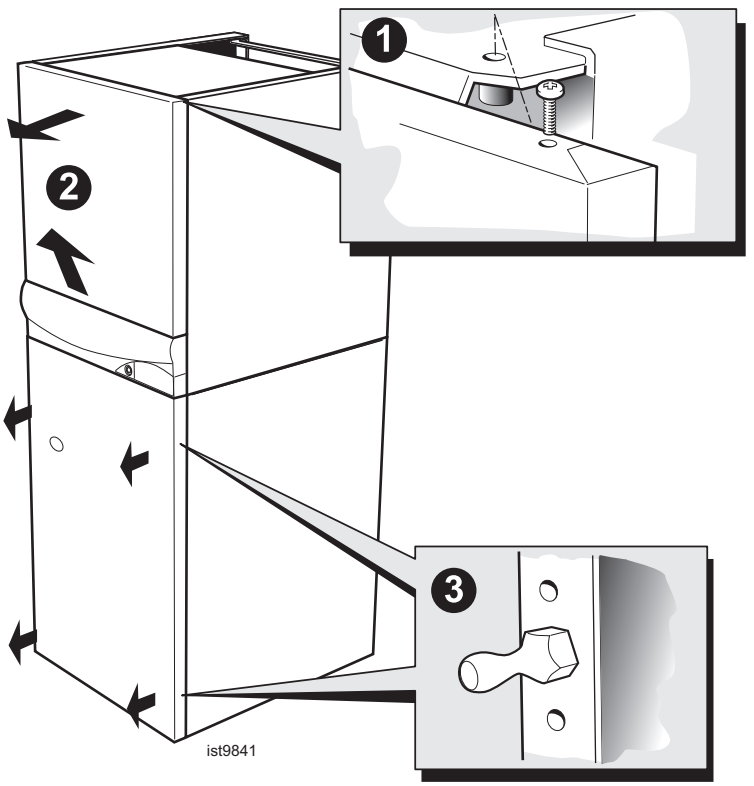

54 CONTROLS FACIA PANEL REMOVAL

Refer to Frame 51.

1. Ensure the power supply is turned off.
2. Disconnect the 14 way in-line molex connector.
3. Remove the 2 M5 screws securing the panel.
4. Lift off the panel from its locating slots.
5. Disconnect the DHW thermistor at the in-line connector.
6. Remove the panel and store carefully to one side.

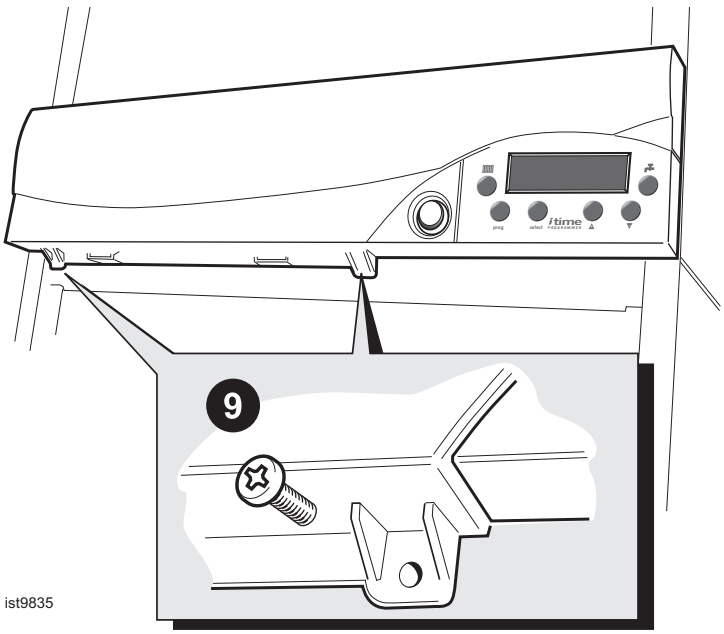

55 EXPANSION VESSEL PRESSURE

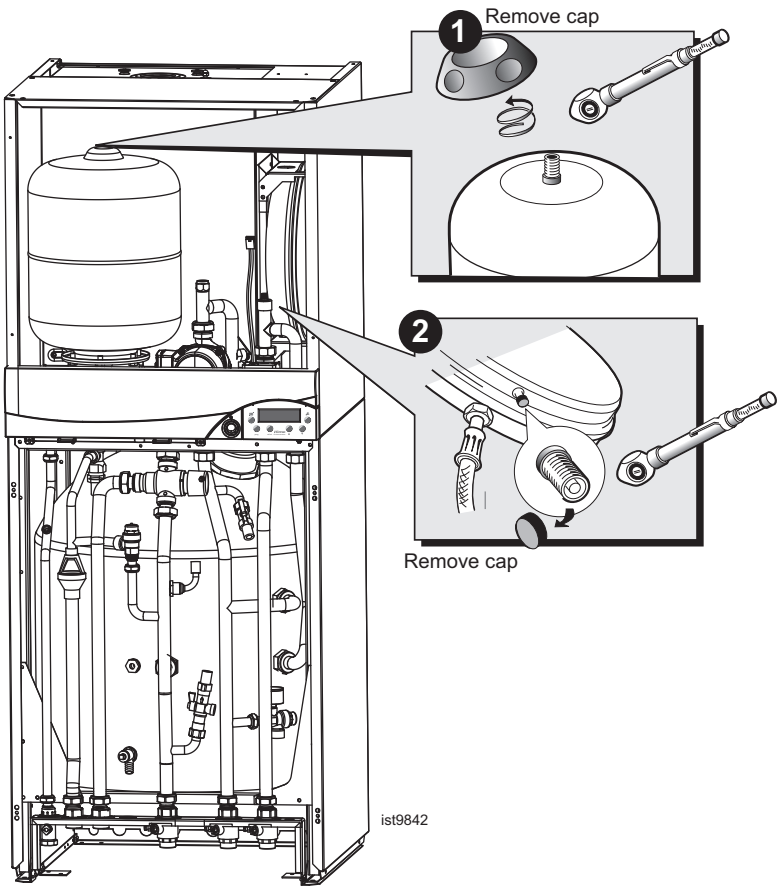

Check the pre-charge pressures on both expansion vessels and top up if necessary.

Pre-charge Pressure		
1	DHW	1.5 - 2.5 bar
2	CH	1 - 1.5 bar

Note.

Before checking the Pre charge pressure of expansion vessels:

CH - System pressure must be dropped to zero.

DHW - Close cold inlet isolating valve and open a hot tap to drop DHW cylinder pressure to zero.

56 BOILER SEALING PANEL REMOVAL

1. Turn off the gas supply at the gas service cock and disconnect the electricity supply.
2. Slacken the backnut securing the DHW vessel to its support bracket and remove carefully to one side. It is unnecessary to disconnect the hose at this stage.
3. Undo the fixing screw securing the control box to the expansion vesel bracket.
4. The control box can now be raised off its mounting slots and dropped to the base plate.
5. Access is now available to remove the 4 fixing screws and lift off the boiler sealing panel.

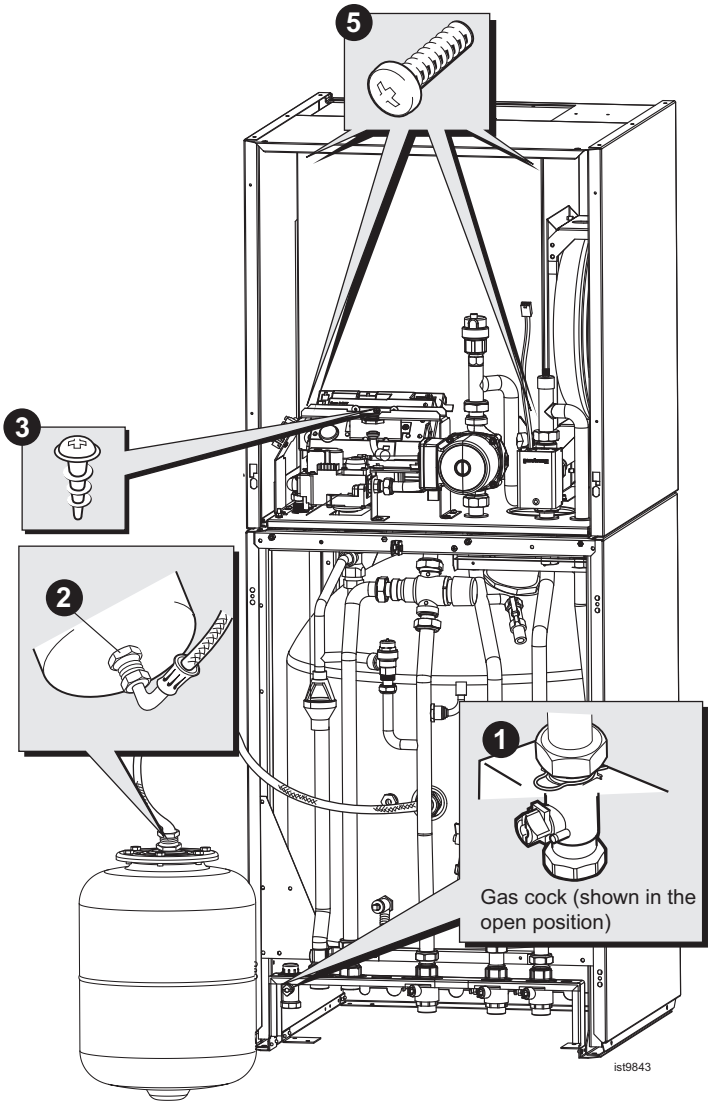

57 FAN, GAS INJECTOR AND VENTURI ASSEMBLY REMOVAL AND CLEANING

1. Disconnect the electrical leads from the fan.
2. Undo the gas pipe union connection to the injector housing.
3. Undo the single retaining screw on the fan mounting bracket.
4. Remove the mounting bracket.
5. Lift off fan and venturi assembly.

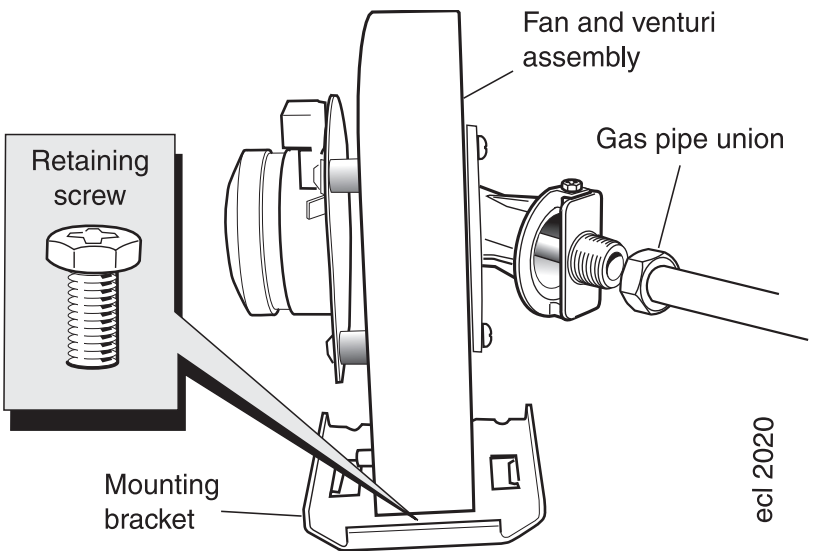

58 BURNER REMOVAL AND CLEANING

1. Remove the 6 screws securing the burner (the 3 screws at the rear are extended to ease access).

2. Lift off the burner from the combustion chamber.

IMPORTANT

The burner head is a ceramic plaque construction. Care must be taken to ensure that **the burner is not placed down upon its face** as this may cause damage to the ceramic.

3. Brush off any deposits that may be on the ceramic with a SOFT brush.

4. Inspect the sealing gasket around the burner and combustion chamber insulation for any signs of damage. Replace as necessary.

Note.

Take care not to disturb the ionisation probes at the front and rear of the combustion chamber.

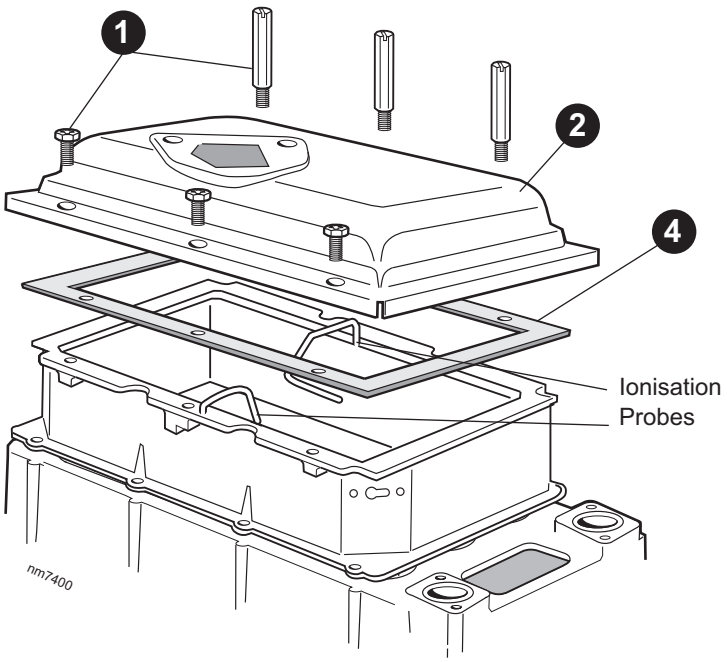

59 CLEANING THE CONDENSATE 'S' TRAP

1. Disconnect the condensate drain pipe.
2. Remove the elongated bolts, pull the trap down and forwards to remove.
3. Flush out any deposits with clean water.
4. When re-assembling ensure that the trap is full of water.

Note.

To improve access it will be necessary to:

a. *remove the DHW expansion vessel as shown.*

and

b. *remove the boiler controls box see Frame 76.*

Alternatively

Flush out any deposits in the 'S' trap by removing the sump front cover and flush with clean water see Frame 61.

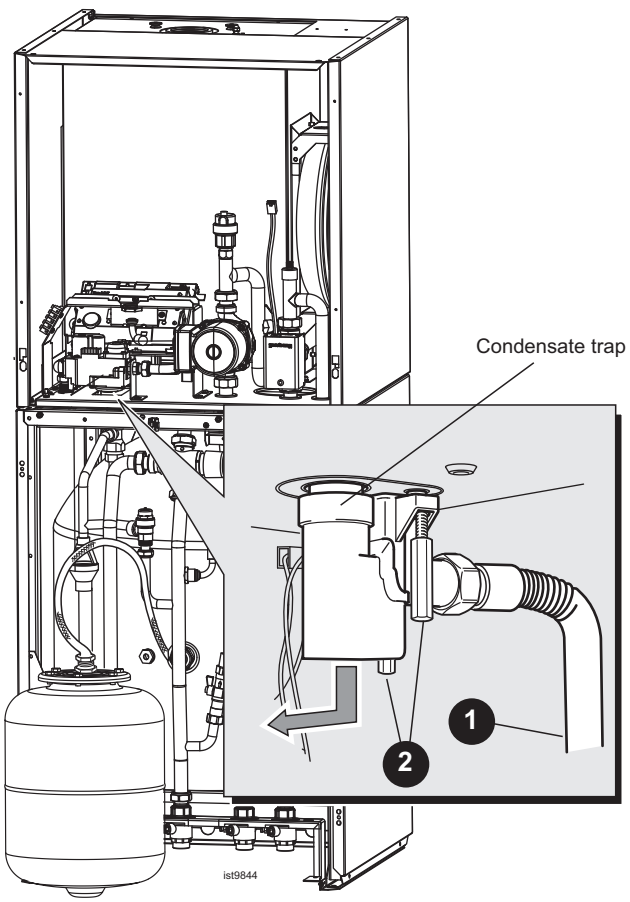

60 CLEANING THE DHW FILTERS

The DHW inlet filter is fitted within the Pressure Reducing Valve, which is fitted externally to the appliance on the DHW inlet pipe.

1. Close the cold water stop cock to the property or isolate the PRV using the isolation valves if fitted.
2. Undo the PRV cartridge and remove the assembly from the brass body.
3. Remove the filter from the cartridge body and clean.
4. Re-assemble in reverse order and re-open the cold water stop cock.

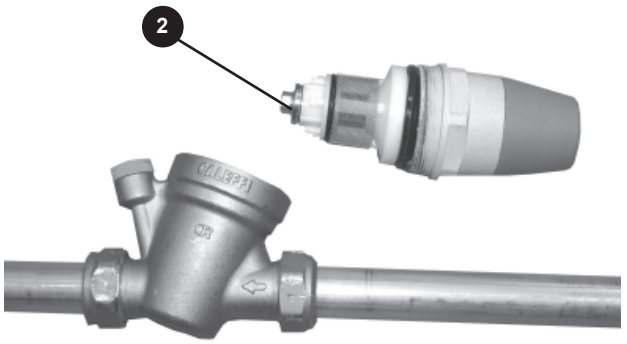

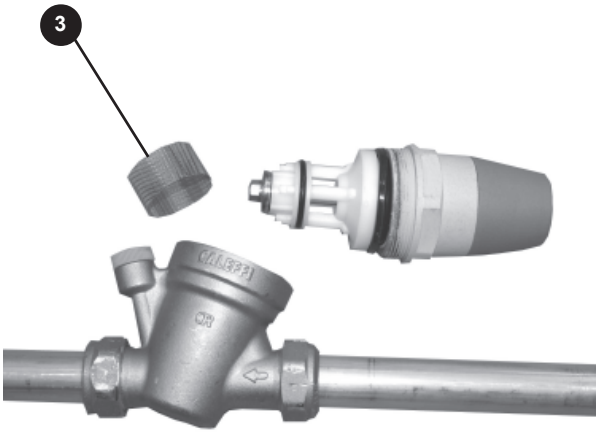

61 CLEANING THE HEAT EXCHANGER

1. Remove ignition and flame detection electrodes. Refer to Frames 69 & 70.
2. Remove the 3 screws retaining the sump cover and remove.
3. Using a suitable tool as supplied in the standard British Gas Flue brush kit, clean between the heat exchanger fins from the top of the heat exchanger.
4. Access to the base of the heat exchanger is now possible. Brush clean any deposits from the base of the heat exchanger and remove any loose deposits from the sump.
5. Inspect the ignition and detection electrodes. Ensure that they are clean and in good condition - replace if necessary.
6. Check the condition of the combustion chamber insulation. Any cracked or damaged pieces must be replaced.

Note. *Take care not to disturb the ionisation probes at the front and rear of the combustion chamber.*

7. Check that the ignition and detection gaps are correct.

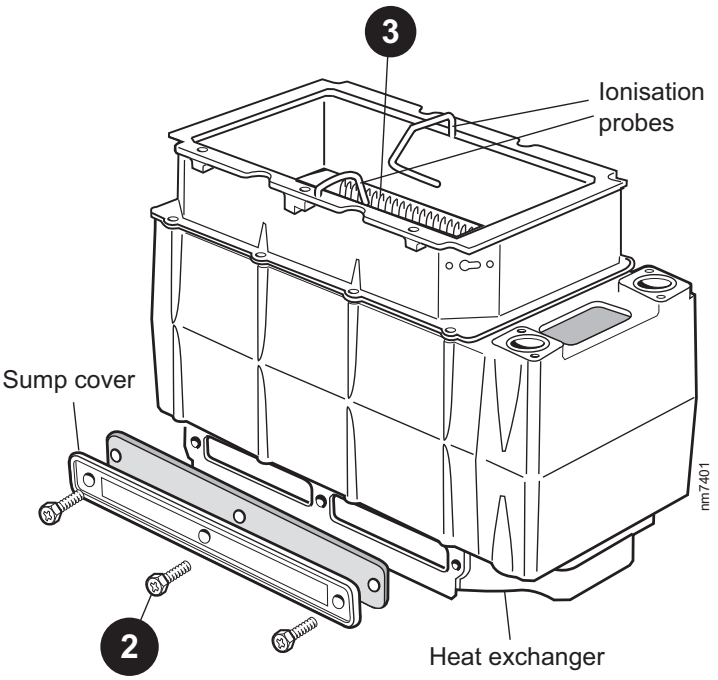

62 RE-ASSEMBLY

Re-assemble the boiler in the following order:

1. Refit the condensate trap.
2. Refit the sump cover.
3. Refit the electrodes. (Check dimensions, see Frames 69 & 70).
4. Refit the burner, renewing any damaged or deteriorating sealing gaskets.
5. Refit the fan / venturi assembly.
6. Reconnect the fan electrical lead.
7. Refit the boiler sealing panel.

   IMPORTANT.
   Ensure that the boiler sealing panel is correctly fitted and that a good seal is made.
8. Turn on the gas supply at the gas service cock.
9. Reconnect the electrical supply.

63 REPLACEMENT OF COMPONENTS

GENERAL

When replacing ANY component in the boiler module.

1. Isolate the electricity supply from both the boiler and the immersion heater. N.B: The immersion heater should be supplied from a separate suitably rated electrical supply fused at 13 amps.
2. Turn off the gas supply.
3. Remove the boiler front panels. Refer to Frame 53.
4. It may be necessary to remove the DHW expansion vessel. Refer to Frame 55.

After replacing ANY component check operation of the boiler including gas tightness, gas rate and combustion test.

IMPORTANT.
When work is complete, if the sealing panel has been removed, it must be correctly refitted - ensuring that a good seal is made.

Notes.

1. *In order to assist fault finding, the control panel has an LED diagnostic display. The key to boiler fault conditions is shown in Frame 96.*
2. *In order to replace most of the components in Frames 64 to 95 it is necessary to drain the boiler or cylinder. Refer to Frames 85 & 86.*

THE BOILER MUST NOT BE OPERATED IF THE SEALING PANEL IS NOT FITTED

64 DRY FIRE REPLACEMENT

1. Refer to Frames 53 & 54.
2. Remove the boiler front and sealing panels. Refer to Frame 56.
3. Drain down the boiler. Refer to Frame 85.
4. Unplug the electrical lead.
5. Unscrew the thermistor.
6. Fit the new thermistor using the sealing washer provided.
7. Reassemble in the reverse order.
8. Check the operation of the boiler. Refer to Frame 49.

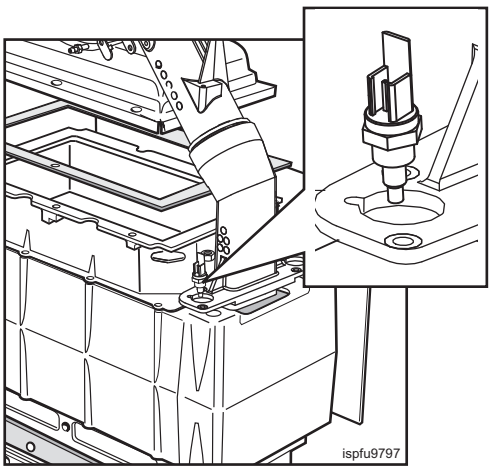

65 FAN REPLACEMENT

1. Refer to Frame 53 & 54.
2. Remove the boiler sealing panel. Refer to Frame 56.
3. Disconnect the electrical leads from the fan.
4. Undo the gas pipe union connection to the injector housing.
5. Remove the retaining screw and pull off the mounting bracket.
6. Remove the fan and venturi assembly.
7. Remove the 3 retaining screws and remove the venturi assembly, *noting the orientation of the venturi in relation to the fan body.*
8. Transfer the venturi assembly to the new fan, replacing the gasket if evidence of damage or deterioration is visible.
9. Fit the new fan / venturi assembly.
10. Re-assemble the boiler in reverse order taking care not to overtighten the single retaining screw on the fan mounting bracket.
11. Check the operation of the boiler. Refer to Frame 49.

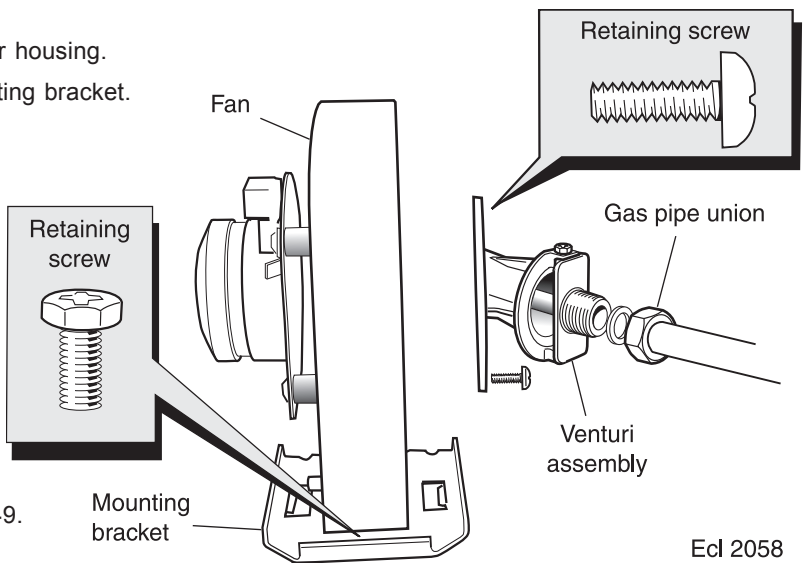

66 BURNER INJECTOR REPLACEMENT

1. Refer to Frame 53 & 54.
2. Remove the boiler sealing panel. Refer to Frame 56.
3. Disconnect the electrical leads from the fan.
4. Undo the gas pipe union connection to the injector housing.
5. Remove the retaining screw and pull off the mounting bracket.
6. Remove the fan and venturi assembly.
7. Remove the 2 injector housing retaining screws.
8. Withdraw the injector housing.
9. Fit the new injector housing complete with injector.
10. Re-assemble in reverse order, ensuring that the new gas seal supplied is located correctly in the injector housing.
11. Check operation of the boiler. Refer to Frame 49.

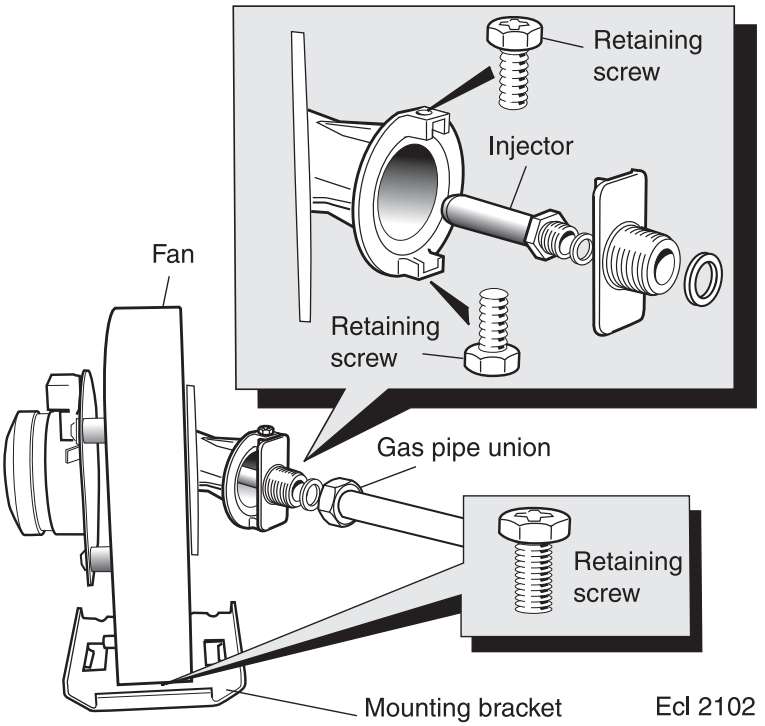

67 BURNER REPLACEMENT

1. Refer to Frame 53 & 54.
2. Remove the boiler front and sealing panels. Refer to Frames 56.
3. Remove the fan assembly. Refer to Frame 57.
4. Remove the 6 screws securing the burner (the 3 screws at the rear are extended to ease access).
5. Lift off the burner from the combustion chamber.
6. Fit the new burner, replacing any damaged or deteriorating sealing gasket.
7. Reassemble in reverse order.
8. Check the operation of the boiler. Refer to Frame 49.

Note. *Take care not to disturb the ionisation probes at the front and rear of the combustion chamber.*

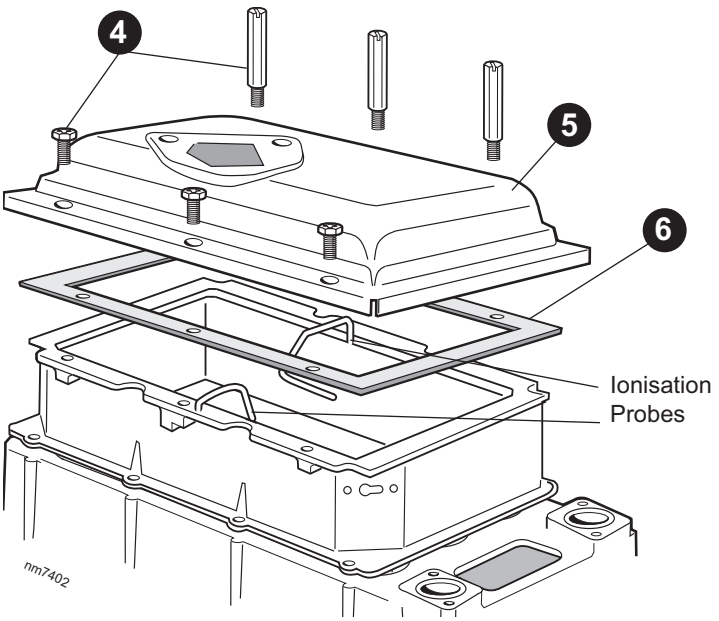

68 CONTROL THERMISTOR, RETURN THERMISTOR AND OVERHEAT THERMOSTAT REPLACEMENT

1. Refer to Frame 53 & 54.
2. Unclip the thermistor / thermostat from the flow / return pipe and withdraw it from the controls compartment.
3. Disconnect the electrical leads from the thermistor / thermostat.
4. Re-connect the electrical leads and re-assemble in reverse order ensuring that the spring clip is securely on the pipe.
5. Check the operation of the boiler. Refer to Frame 49.

Note.
O/H thermostat on flow pipe - orange wires
Flow thermistor on flow pipe - red wires
Return thermistor on return pipe - pink wires

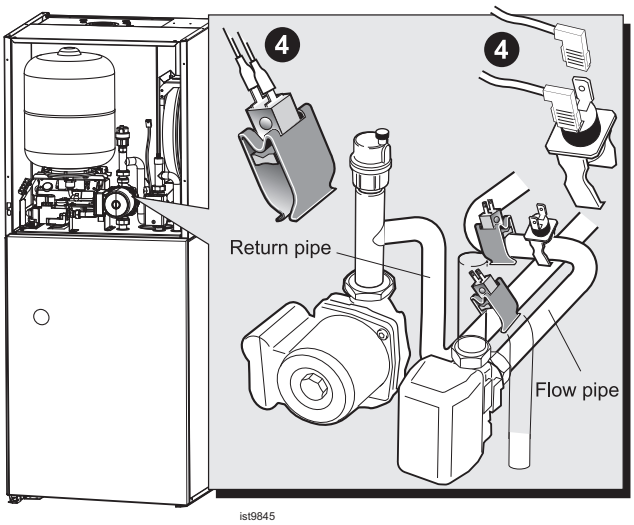

69 IGNITION ELECTRODE REPLACEMENT

1. Refer to Frame 53 & 54.
2. Remove the boiler sealing panel. Refer to Frame 56.
3. Unplug the spark electrode lead from the spark generator.
4. Undo the 2 retaining screws holding the spark electrode to the combustion chamber.
5. Remove the earth lead from the ignition electrode.
6. Remove the electrode, taking care not to dislodge the grommet from the casing.
7. Fit the new ignition electrode, using the new gasket supplied, check dimensions as shown.
8. Re-assemble in reverse order and check that no damage to the combustion chamber insulation has occurred during electrode replacement.
9. Check the operation of the boiler. Refer to Frame 49.

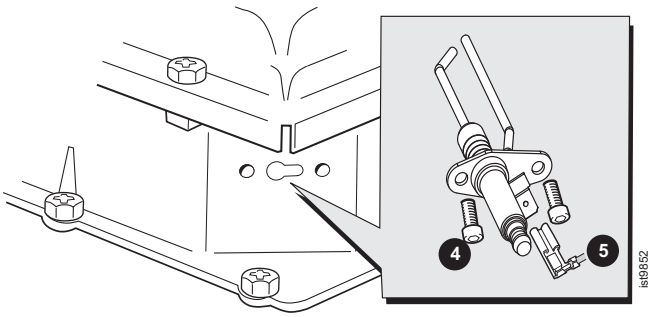

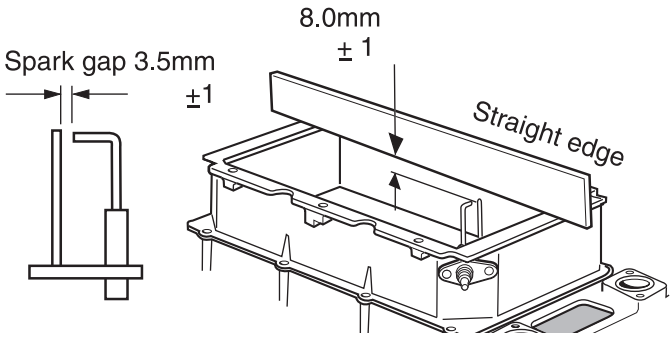

70 FLAME SENSING ELECTRODE REPLACEMENT

1. Refer to Frame 53 & 54.
2. Remove the boiler sealing panel. Refer to Frame 56.
3. Unplug the sensing electrode lead from the control box.
4. Undo the 2 retaining screws holding the sensing electrode to the combustion chamber.
5. Unbolt the sensing electrode earth lead from the earth point beneath the boiler.
6. Remove the electrode, complete with grommet.
7. Fit the new sensing electrode, using the new gasket supplied, check dimensions as shown.
8. Re-assemble in reverse order and check that no damage to the combustion chamber insulation has occurred during electrode replacement.
9. Check the operation of the boiler. Refer to Frame 49.

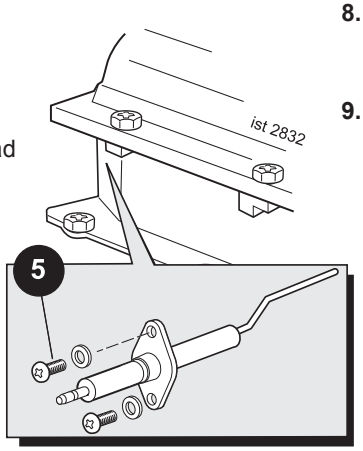

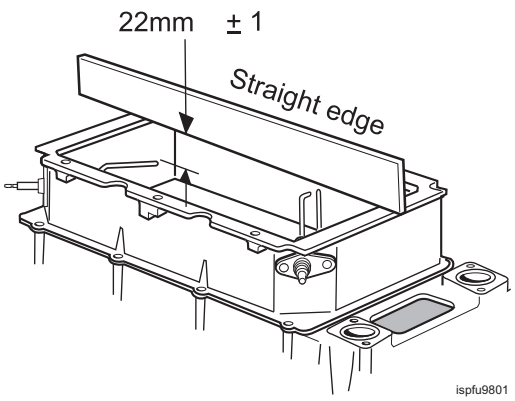

71 COMBUSTION CHAMBER INSULATION REPLACEMENT

Ideal Stelrad Group recommends that, for your own comfort and safety and to comply with good working practice, the procedure described below is followed:

1. Refer to 'Replacement of Components' Frame.
2. Remove the boiler front and sealing panels. Refer to 'Boiler Front Panel Removal' and 'Boiler Sealing Panel Removal' Frame.
3. Remove the fan / venturi assembly. Refer to 'Fan and Venturi Assembly removal and cleaning' Frame.
4. Remove the burner. Refer to 'Burner removal and cleaning' Frame.
5. Remove the ignition electrode. Refer to 'Ignition Electrode replacement' Frame.
6. Remove the flame detection electrode. Refer to 'Flame Detection electrode replacement' Frame.
7. Remove the front and rear ionisation probes and discard.

Prior to removal of the insulation piece the following protective equipment should be worn:

- **Face mask supplied with the spare part.**
- **Gloves supplied with the spare part.**

8. Damp down the combustion chamber area containing the insulation piece.
9. Remove the insulation piece. The replacement one piece insulation is supplied in a plastic bag, this bag should be retained and the discarded insulation should now be placed into it.
10. Sweep any dampened particles and place in the plastic bag.
11. Fit new insulation piece -
    (a) Locate and align the insulation with the electrode holes and position the insulation into the combustion chamber.
    (b) Push the flexible material into the corners of the combustion chamber ensuring it is flat and flush against the combustion chamber wall.
    (c) Interlock the insulation piece along the back wall of the combustion chamber.
    (d) Again push the flexible material into the corners of the combustion chamber ensuring it is flat and flush against the combustion chamber wall.
    (e) Secure the insulation by replacing the ionisation probes with those supplied in the kit. Note that ionisation probes are a serviceable component and require inspecting annually.

Note. *The insulation is designed to be interlocking and should be fitted as shown.*

12. Remove the gloves and face mask and place them in the plastic bag.
13. Wash your hands and any areas of skin which may have come into contact with any of the particles from the insulation piece.

Note. *Seal the plastic bag and dispose of it and its contents into a commercial tip.*

14. Reassemble in reverse order.
15. Check operation of the boiler. Refer to 'General Checks' Frames.

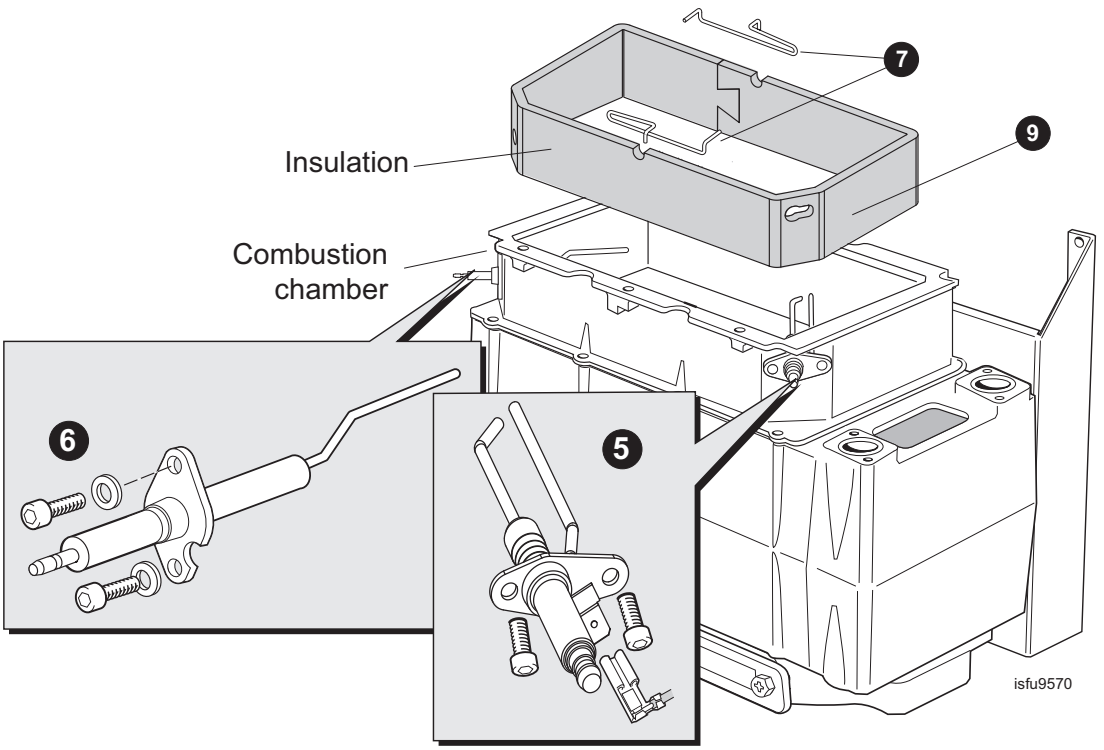

72 GAS CONTROL VALVE REPLACEMENT

1. Refer to Frame 53 & 54.

Note.
Ensure surrounding water system pipework is cooled to a point where it cannot represent a burn hazard.

2. Slacken the backnut on the DHW expansion vessel and remove to one side as shown.
3. Unplug the electrical lead from the gas control valve and disconnect the earth wire.
4. Remove the sensing tube from the gas control valve.
5. Undo the gas inlet pipe union.
6. Undo the union nut on the RHS of the gas control valve.
7. Withdraw the valve, complete with inlet pipe.
8. Fit the new valve and re-assemble in reverse order.
9. Check operation of the boiler. Refer to Frame 49.

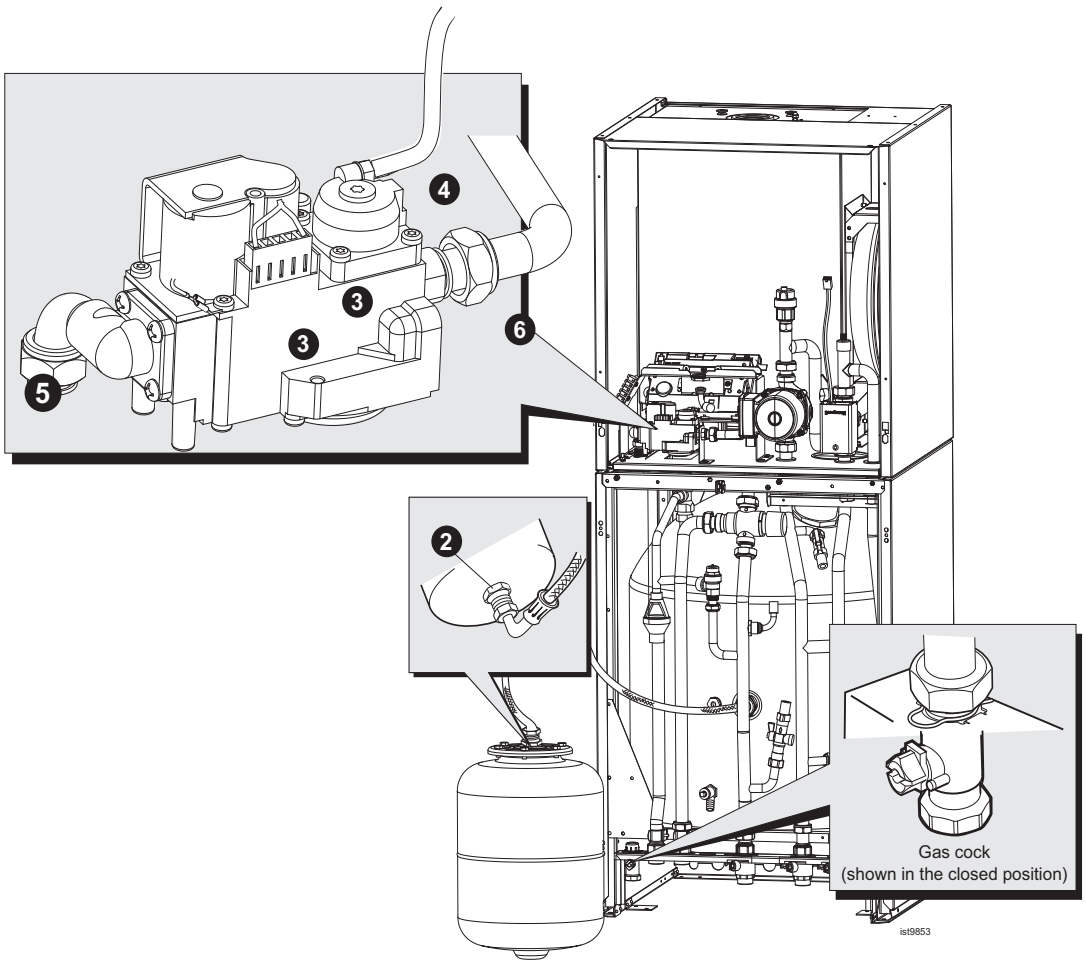

73 DIVERTER VALVE ACTUATOR REPLACEMENT

1. Refer to Frame 53 & 54.
2. Unplug the electrical lead from the valve actuator.
3. Slacken off the screw and pull off the cover.
4. Slacken off the 2 screws and pull off the complete assembly from the mounting plate.
5. Fit the new actuator and re-assemble in reverse order.
6. Check operation of the boiler. Refer to Frame 49.

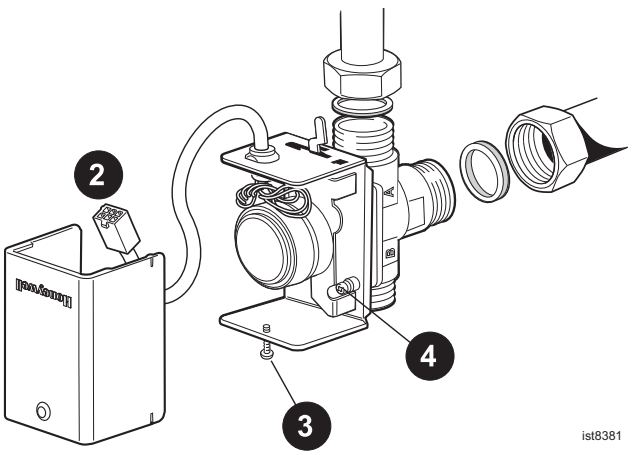

74 CONDENSATE 'S' TRAP REPLACEMENT

1. Refer to Frame 53 & 54.

Note.
Ensure surrounding water system pipework is cooled to a point where it cannot represent a burn hazard.

2. Slacken the backnut on the DHW expansion vessel and remove to one side as shown.
3. Disconnect the condensate drain pipe.
4. Remove the elongated bolts, pull the trap down and forwards to remove.
5. Transfer the drain pipe to the new trap and re-assemble in reverse order.
6. When re-assembling ensure that the trap is full of water.
7. Check operation of the boiler. Refer to Frame 49.

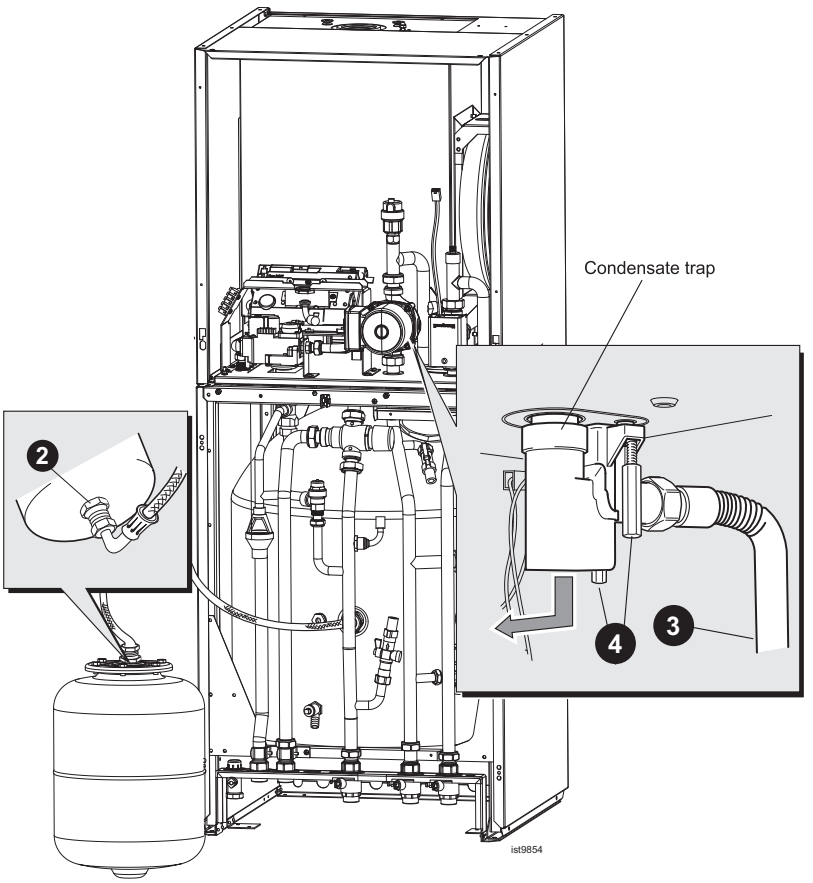

75 DHW THERMISTOR REPLACEMENT

1. Refer to Frame 53 & 54 .
2. Disconnect the electrical lead.
3. Withdraw the Heyco bush from the pocket.
4. Ease out the sensor and discard.
5. Fit the new sensor.
6. Refit the Heyco bush into the pocket.
7. Remake the electrical connection.
8. Check operation of the boiler. Refer to Frame 49.

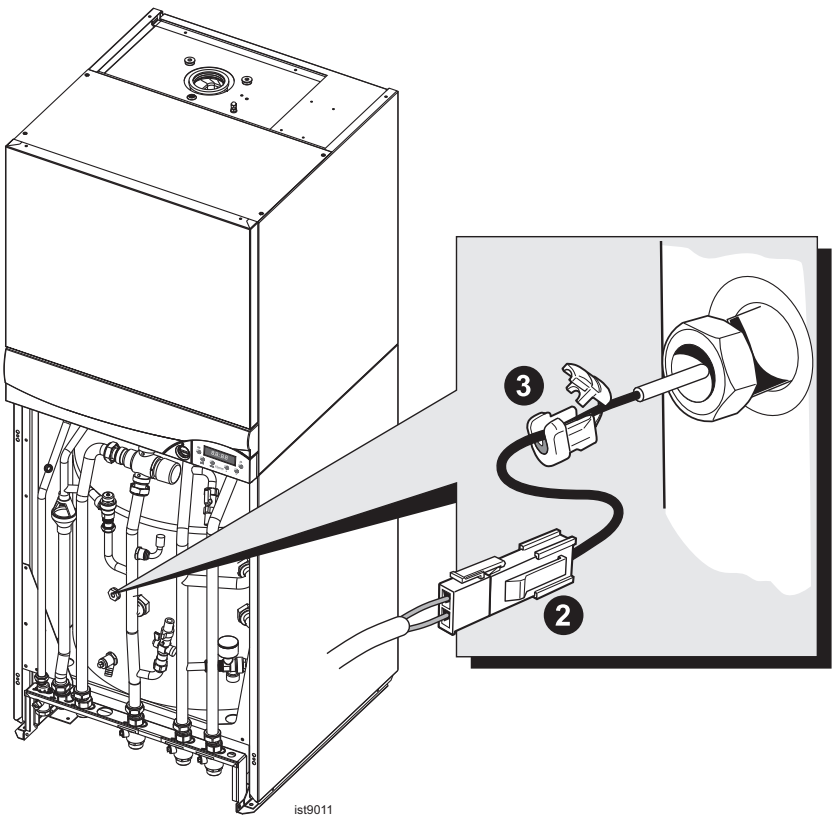

76 CONTROL BOX REPLACEMENT

1. Refer to Frame 53 & 54 .
2. Slacken the backnut on the DHW expansion vessel and remove to one side as shown.
3. Remove the fixing screw locating the control box bracket.
4. Unplug all the electrical wiring from the control box and remove.
5. Transfer the fixing bracket to the new control box.
6. Re-assemble in reverse order and reconnect all the electrical wiring.
7. Check operation of the boiler. Refer to Frame 49.

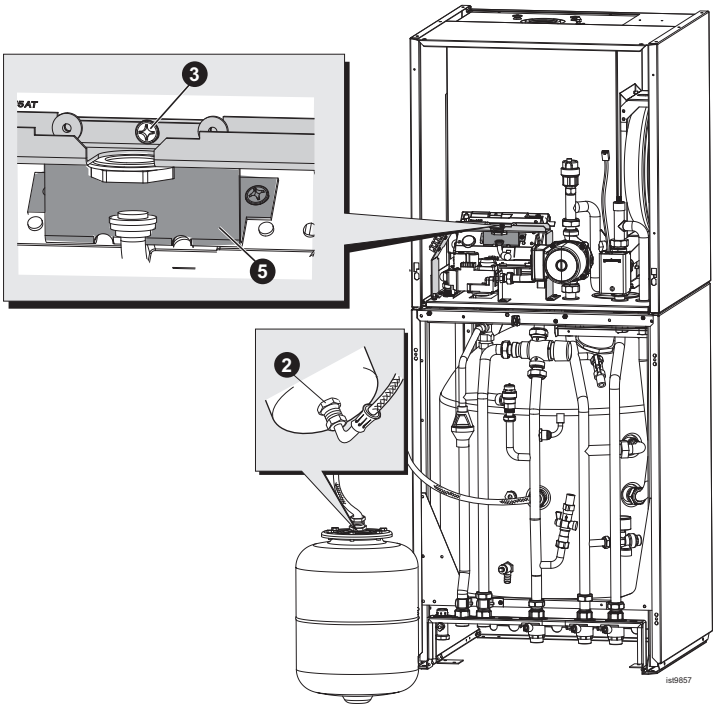

77 MAINS SWITCH REPLACEMENT

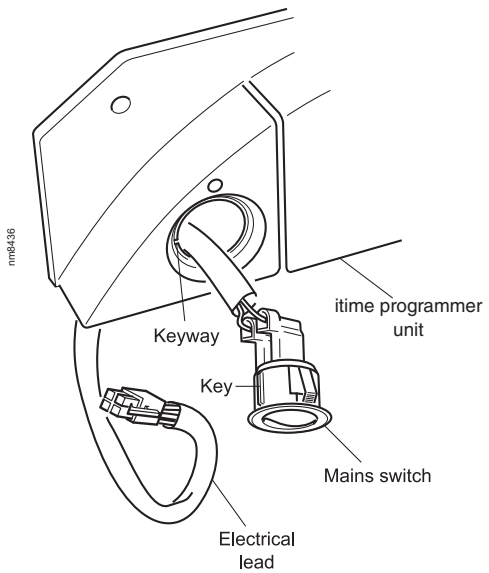

1. Refer to Frame 53 & 54.
2. Remove the 2 securing screws and allow the user control to lower.
3. Push out the mains switch from the rear, as shown.
4. Fit the new switch, ensuring that the electrical leads are replaced on the correct terminals (refer to Frame 42) and the key on the switch is correctly aligned with the keyway in the plastic moulding.
5. Re-assemble in reverse order.
6. Check operation of the boiler. Refer to Frame 49.

78 SPARK GENERATOR REPLACEMENT

1. Refer to Frame 53 & 54.
2. Disconnect the leads from the spark generator.
3. Remove the 2 M4 screws securing the spark generator to the boiler chassis.
4. Fit the new spark generator and re-assemble in reverse order.
5. Check operation of the boiler. Refer to Frame 49.

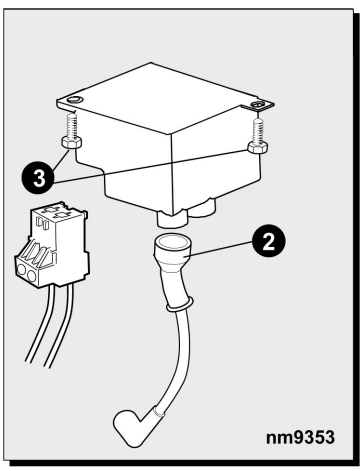

79 DISPLAY UNIT REPLACEMENT

Note.

Only the display unit is replaced.

1. Refer to Frame 53 & 54.
2. Loosen the screw on the underside of the user control.
3. Pull the display unit forward to remove.
4. Push the new display unit into position.
5. Reassemble in reverse order.
6. Check operation of the boiler. Refer to Frame 49.

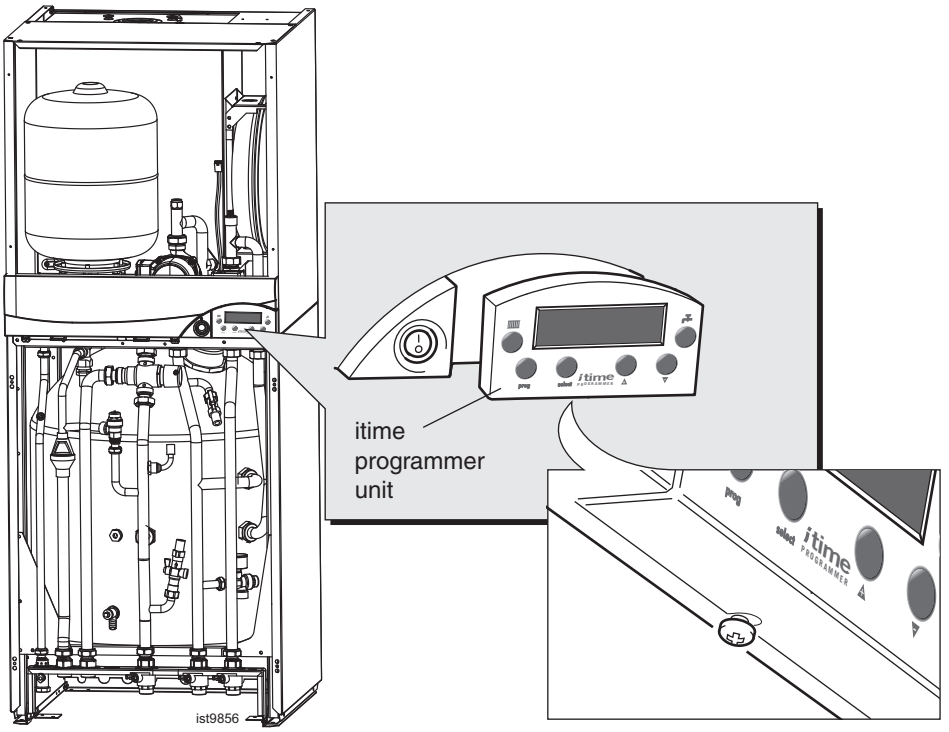

80 PRESSURE GAUGE REPLACEMENT

1. Refer to Frame 53 & 54.
2. Unclip lower front panel.
3. Drain the boiler. Refer to Frame 85.
4. Unscrew the pressure gauge and discard.
5. Fit the new pressure gauge using a suitable jointing compound.
6. Refill the boiler. Refer to Frame 41.
7. Check the operation. Refer to Frame 49.

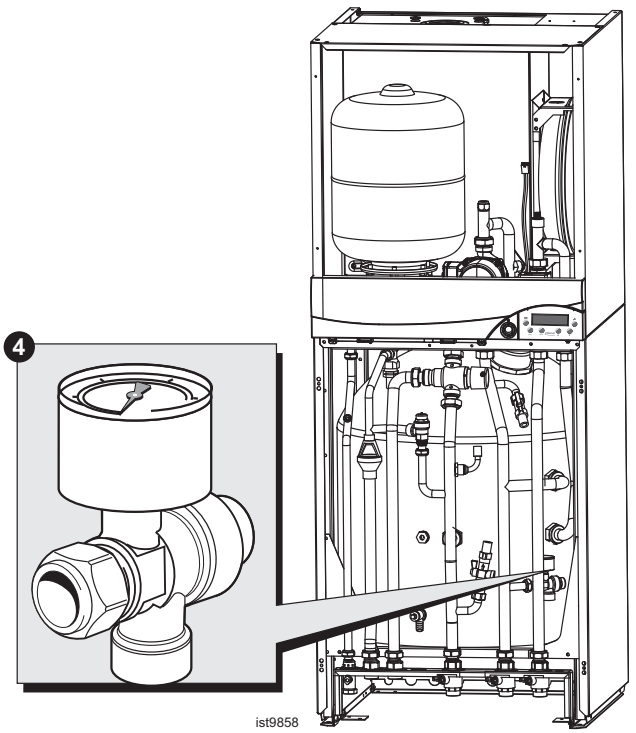

81 SAFETY RELIEF VALVE REPLACEMENT

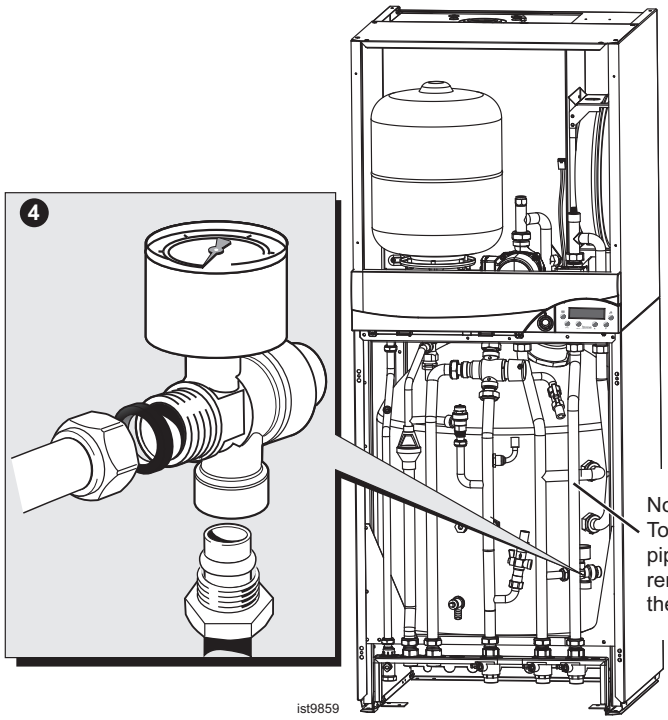

Note.
To gain access to the discharge pipe nut, it may be necessary to remove the CH flow pipe from the appliance.

1. Remove the casing bottom panel. Refer to Frame 53.
2. Drain the boiler. Refer to Frame 85.
3. Remove the discharge pipe.
4. Remove the valve and pressure gauge.
5. Transfer the pressure gauge to the new relief valve.
6. Reassemble in reverse order.
7. Fit the new safety valve and refit the securing pin.
8. Re-assemble in reverse order ensuring correct location of screws in support plate and that tabs on the pump and valve housings engage in slots.
9. Reconnect the discharge pipe.
10. Check operation of the boiler. Refer to Frame 49.

82 DHW CYLINDER RELIEF VALVE REPLACEMENT

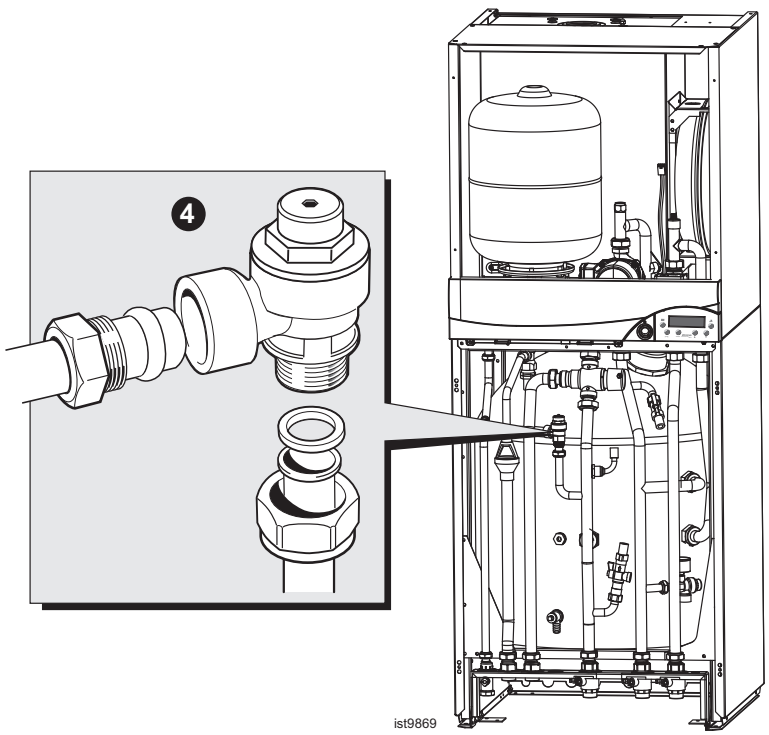

1. Remove the casing bottom panel. Refer to Frame 53.
2. Drain the cylinder. Refer to Frame 86.
3. Remove the valve.
4. Fit the new relief valve.
5. Reassemble in reverse order.
6. Check operation of the boiler. Refer to Frame 49.

83 TEMPERATURE & PRESSURE RELIEF VALVE REPLACEMENT

1. Refer to Frame 53 & 54.
2. Remove the DHW expansion vessel. Refer to Frame 56.
3. Drain the cylinder. Refer to Frame 86.
4. Remove the control box fixing screws and slide the box to enable the valve to be removed through the cutout in the boiler module base plate.
5. Remove the valve.
6. Fit the new relief valve.
7. Reassemble in reverse order.
8. Check operation of the boiler. Refer to Frame 49.

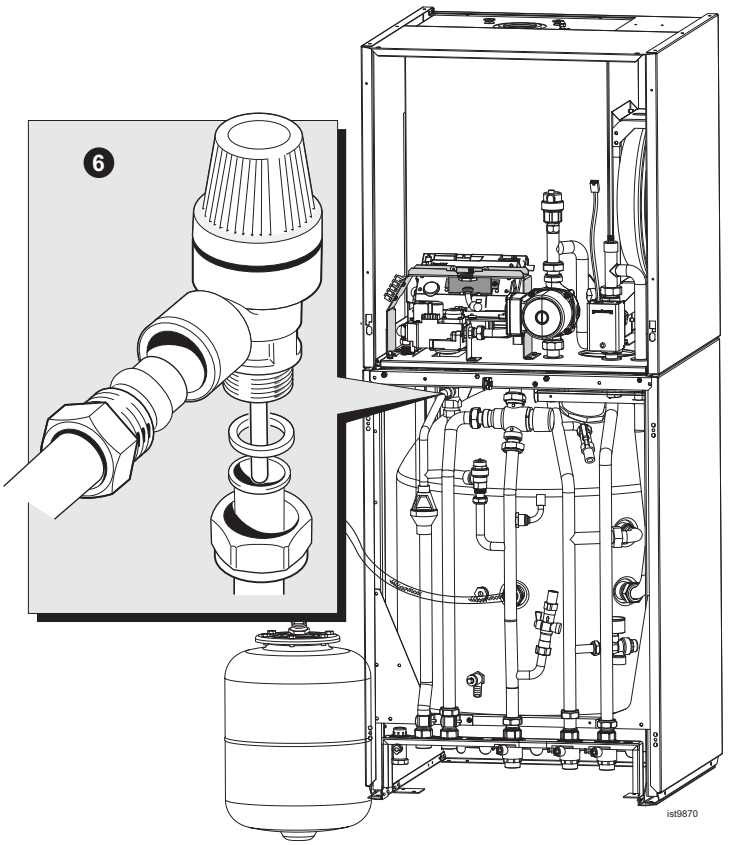

84 BOILER AUTOMATIC AIR VENT REPLACEMENT

1. Refer to Frame 53 & 54.
2. Drain the boiler. Refer to frame 85.
3. Remove the turret from the boiler. Refer to frame 32.
4. Release the silicon tubing from the sample point.
5. Release the electrical connections from the dry fire thermistor.
6. Release the electrical connections from the spark generator.
7. Remove the M5 nut retaining the flue casting spring clip and remove the spring clip.
8. Undo the 2 M5 x 10 flue spring clip retaining bracket screws and remove the bracket.
9. Remove the M5 x 10 screw retaining the flue casting.
10. Remove the flue casting.
11. If the boiler has an air vent spacer – unscrew the air vent from it, and remove. Unscrew the air vent from the heat exchanger plug as supplied in the kit. Dispose of the heat exchanger plug, fit the new air vent onto the spacer, complete with O ring provided, and reassemble in reverse order.
12. Where an air vent spacer is not used, remove the screw and rear bracket. Pull the air vent and plug assembly from the heat exchanger and replace with the parts supplied in the air vent kit.

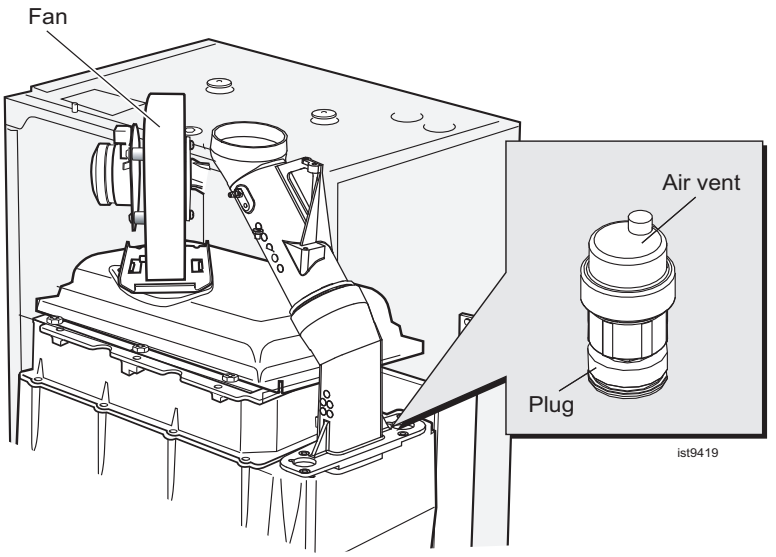

13. Refill the boiler. Refer to Frame 41. Check for leaks around the new air vent joint.
14. Re assemble the boiler in reverse order.
15. Check the operation of the boiler. Refer to Frame 49.

85 DRAINING THE BOILER

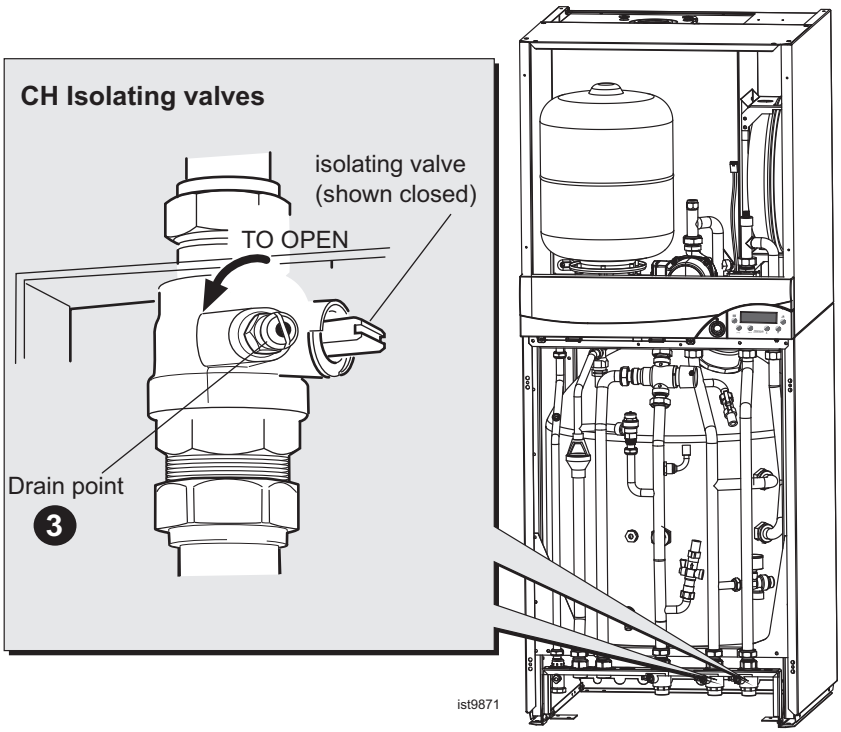

1. Refer to frame 53.
2. Close all the water isolating valves on the piping frame.
3. Attach a length of hose to the drain point and open the drain valve.
4. After replacing any component on the boiler, close the drain valve, remove the hose and open all system isolating valves before proceeding to check operation of the boiler.

86 DRAINING THE CYLINDER

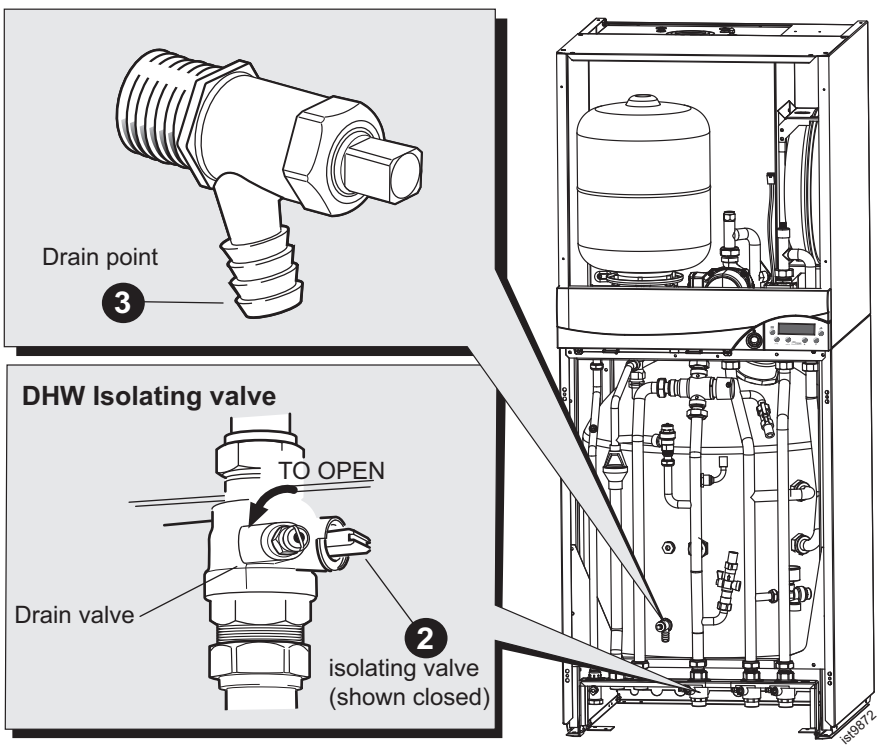

1. Refer to Frame 53.
2. Close the DHW isolating valves on the piping frame.
3. Attach a length of hose to the drain point and open the drain valve.

   After replacing any component on the tank close the drain valve, remove the hose and open all DHW isolating valves before proceeding to check operation of the boiler.

87 DIVERTER VALVE MECHANISM REPLACEMENT

1. Refer to Frame 53 & 54.
2. Drain the boiler. Refer to Frame 85.
3. Undo the 3 union nuts securing the valve body and remove valve.
4. Replace the valve using new fibre washers on the union nuts.
5. Replace the actuator head and reconnect the electrical lead.
6. Refill and check the operation of the boiler.

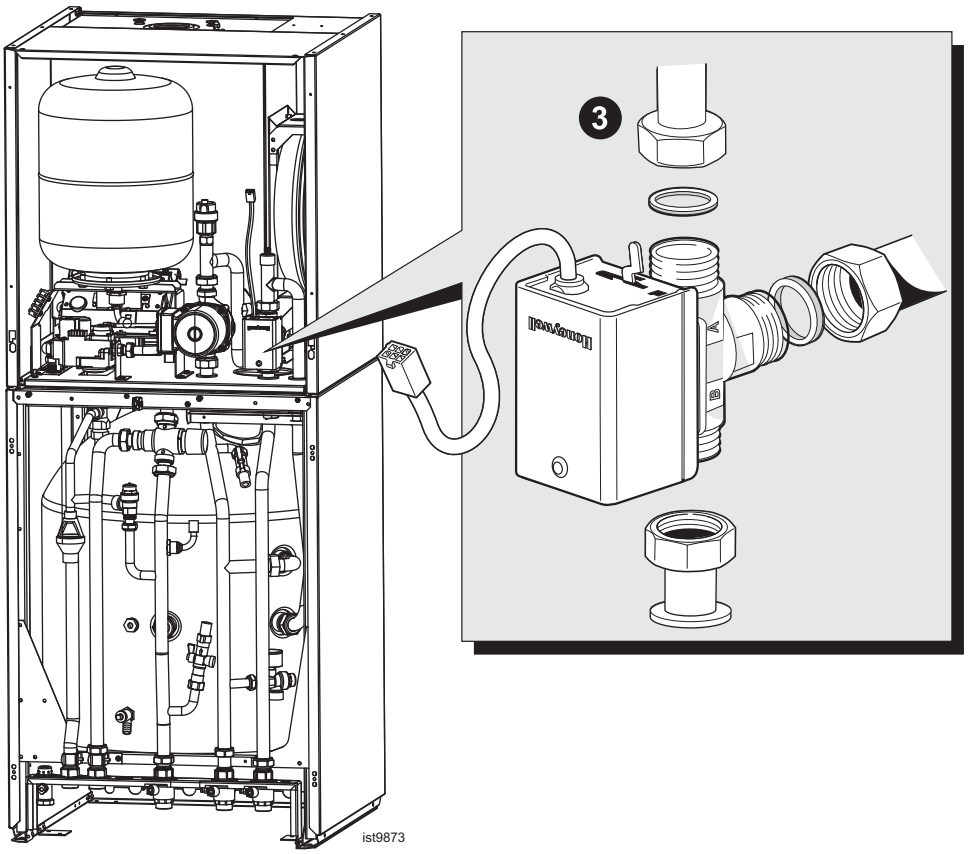

88 PUMP REPLACEMENT

1. Refer to Frame 53 & 54.
2. Drain the boiler. Refer Frame 85.
3. Disconnect the electrical lead from the pump head.
4. Undo the 2 union nuts on the pump and remove the pump.
5. Replace the pump using new sealing washers on the pump union connections
6. Reconnect the electrical lead.
7. Refill and check the operation of the boiler and pump.

Note.
Ensure pump speed switch is set to speed 3.

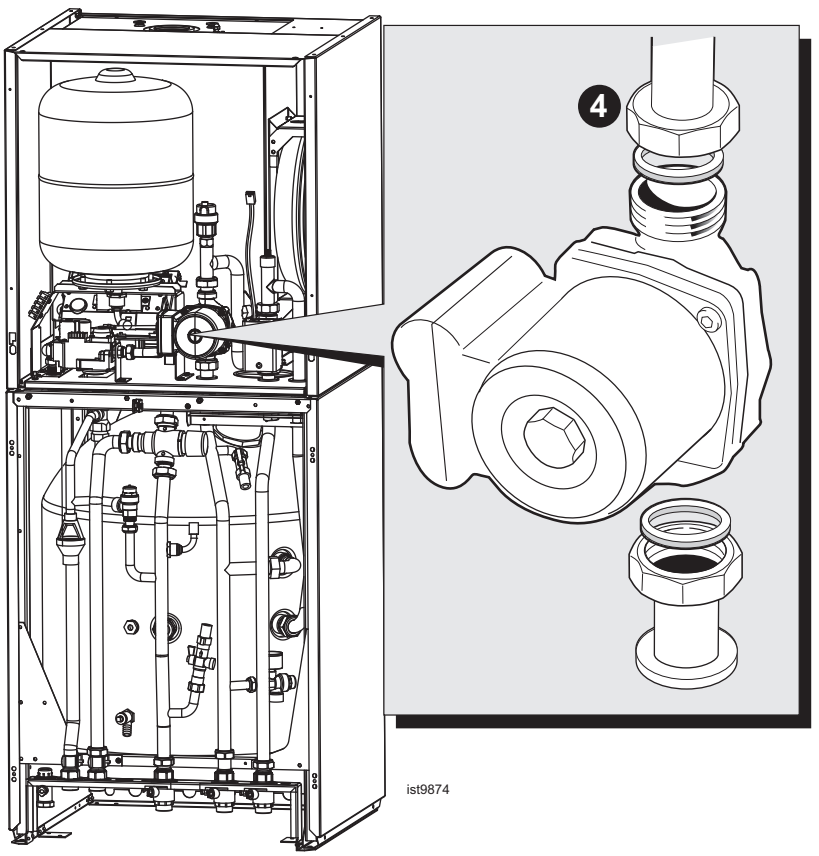

89 CH EXPANSION VESSEL REPLACEMENT

1. Refer to Frame 53 & 54.
2. Drain the boiler. Refer to Frame 85.
3. Undo the union nut on the vessel water connection pipe.
4. Remove the screw and remove the securing clamp.
5. Remove the expansion vessel.
6. Fit the new expansion vessel.
7. Re-assemble in reverse order.
9. Check operation of the boiler. Refer to Frame 49.

Note.

If preferred, and for convenience, a new expansion vessel may be installed elsewhere in the heating system providing it ensures equivalent system protection.

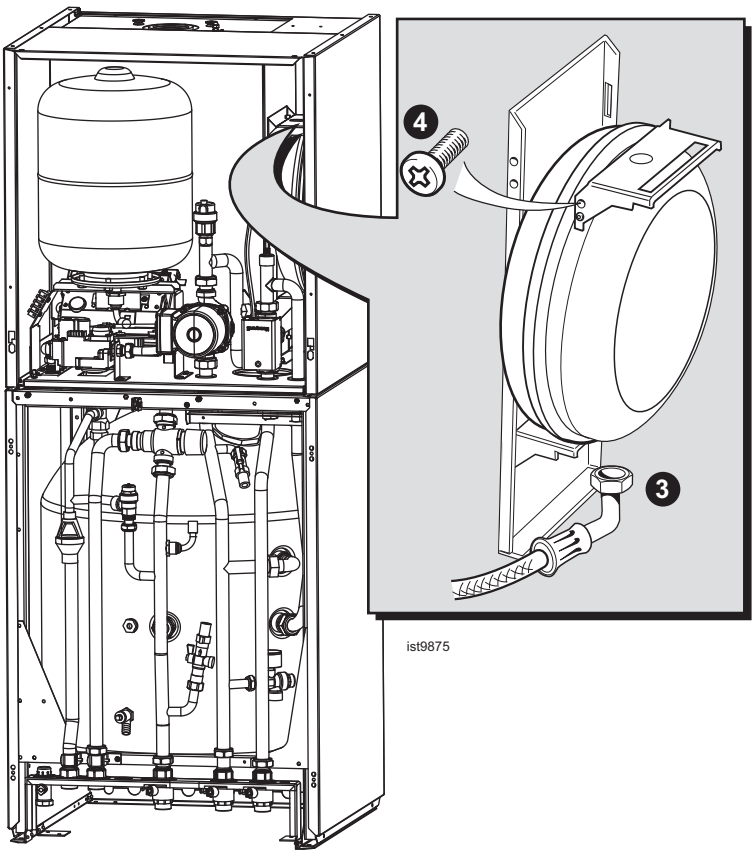

90 DHW EXPANSION VESSEL REPLACEMENT

1. Refer to Frame 53 & 54 .
2. Close the DHW inlet valve on the piping frame.
3. Release the DHW pressure by opening a hot tap.
4. Undo the union nut on the DHW expansion vessel.
5. Slacken backnut and remove the expansion vessel from its bracket.
6. Fit the new expansion vessel.
7. Re-assemble in reverse order.

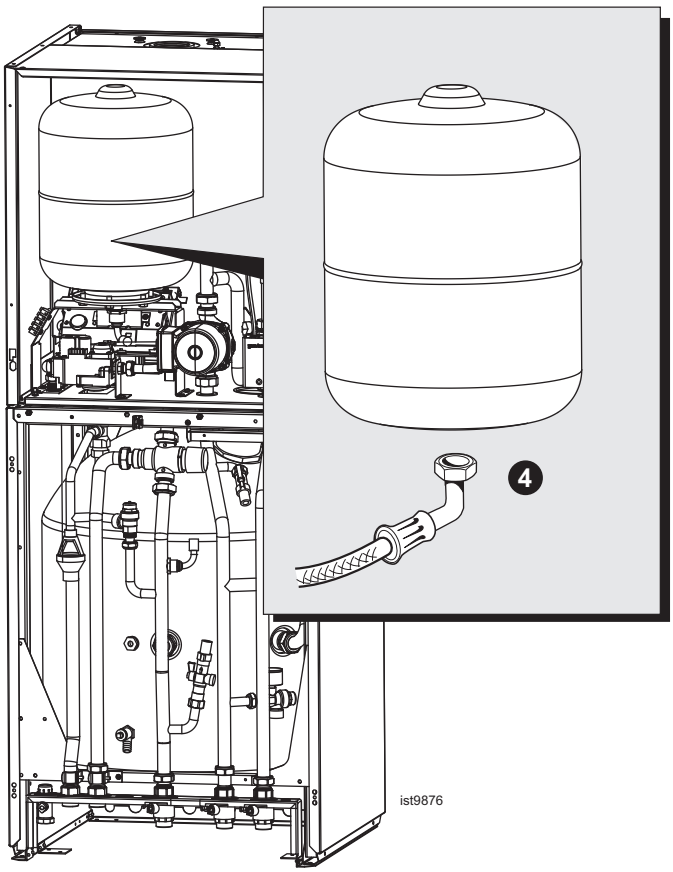

91 BOILER SEALING PANEL SEAL REPLACEMENT

1. Refer to Frames 53 & 54.
2. Remove the old seal from the casing and thoroughly clean the casing surfaces.
3. Fit the new adhesive seals, note that they are supplied to the correct length for the relevant sides.
4. Reassemble in reverse order.

Note. Ensure that the boiler sealing panel is correctly sealed, compressing the seal to make an airtight joint.

5. Check operation of the boiler.

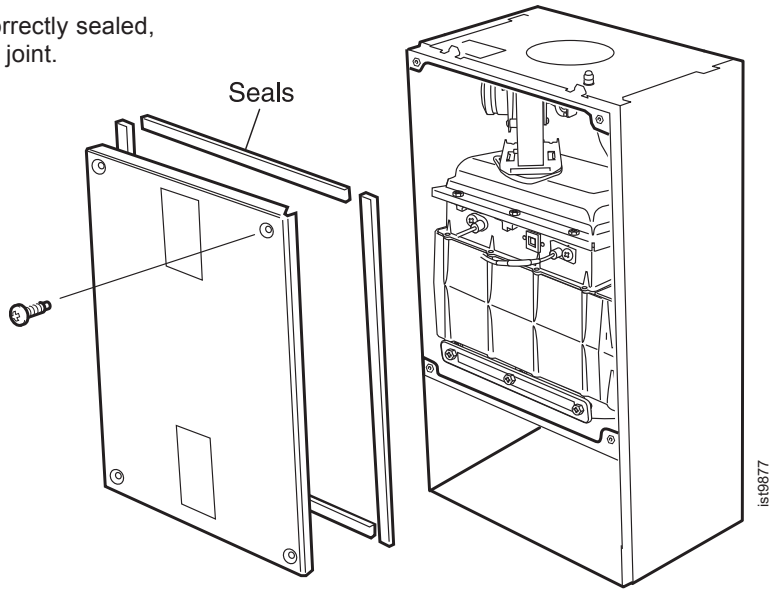

92 THERMOSTATIC MIXER VALVE REPLACEMENT

1. Refer to Frame 53.
2. Drain off approximately 10 litres (2 gallons) from the DHW cylinder. Refer to Frame 86.
3. Undo the 3 union nuts on the mixer valve.
4. Replace the mixer valve using new sealing washers on the union connections.
5. Check the DHW delivery temperature and set to the customer requirements.

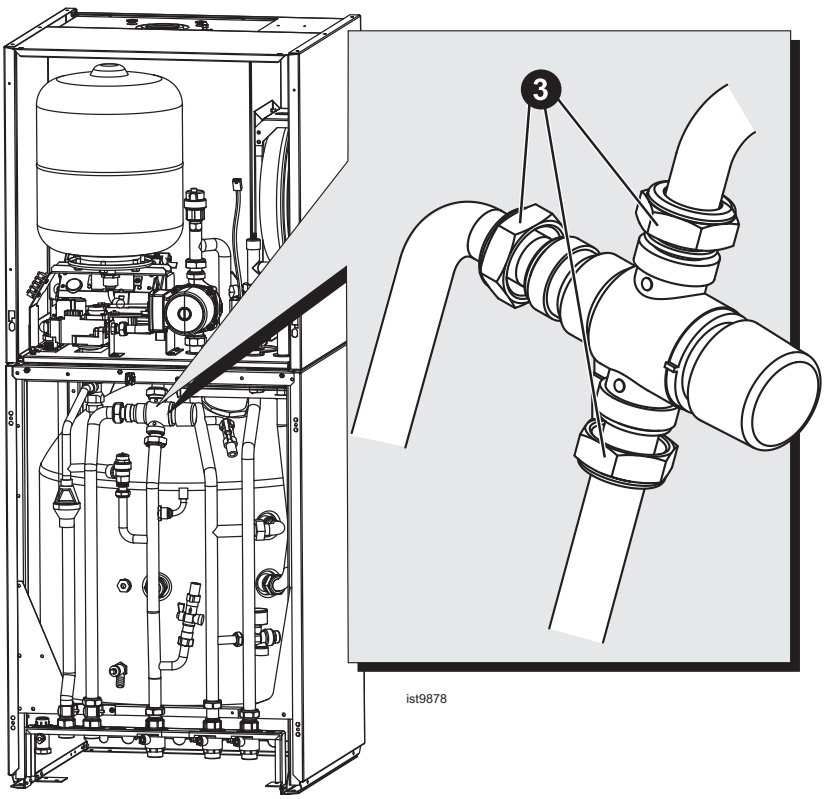

93 HEAT ENGINE REPLACEMENT

Refer also to Frame 10 - 'Boiler exploded view'.
To replace the heat exchanger it is necessary to separate the boiler module from the tank module.

1. Remove the front panels. Refer to Frames 53 and 54.
2. Drain the boiler. Refer to Frame 85.
3. Remove the DHW expansion vessel. Refer to Frame 55.
4. Remove the control box. Refer to Frame 76.
5. Undo the 3 water connections joining the boiler module to the tank module.
6. Undo the gas connection.
7. Undo the 2 screws securing the boiler module to the tank module.

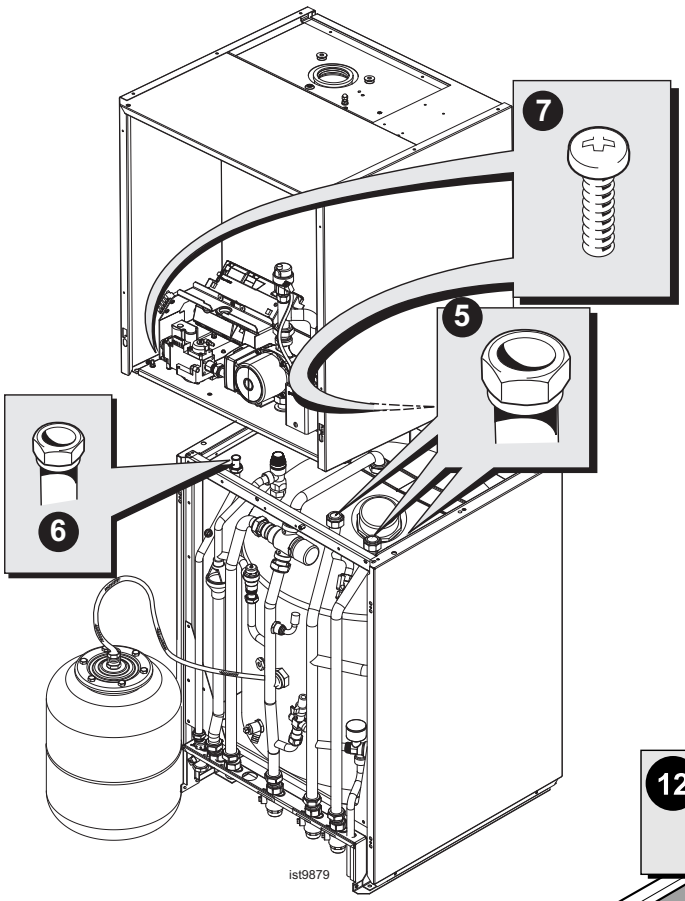

8. Release the flue from the flue turret.
9. Remove the turret from the boiler.
10. Lift the boiler module off the tank module. Remove the back panel and place on its back.
11. Remove 3 top and 2 bottom screws on each side panel to remove side and top panels.
12. Undo the 3 back nuts on the water connection and the back nut on the gas connection.
13. Undo the 4 screws securing the bottom panel to the boiler and remove the panel.
14. Undo the CH expansion vessel hose from the return pipe. Refer to Frame 94.
15. Using a suitable tool undo the push fit connections from the flow and return pipes of the boiler removing the pump assembly and the diverter valve assembly.
16. Remove the fan / venturi assembly and place on one side. Refer to Frame 65.
17. Remove the burner and store safely. Refer Frame 67.
18. Remove the ignition and detection electrodes. Refer to Frames 69 and 70.
19. Undo the M5 x 10 screw retaining the top flue manifold casting and remove from the boiler.
20. Unscrew and remove the automatic air vent complete with the adapter.
21. Release the silicone tubing from the sampling point.
22. Release the electrical connection to the flue sensor.
23. Undo the 4 M5 x 10 screws securing the bottom flue manifold casting and remove.
24. Remove the edge clip securing the flue sensor wiring.
25. Remove the blind grommet to gain access to the return pipe securing bracket.
26. Undo the M5 screw and remove the return pipe securing bracket by sliding forwards.
27. Remove the securing pin to release the return pipe.
28. Undo the 2 M5 screws securing the interpanel to the back panel.
29. Slide the heat engine and interpanel assembly upwards to disengage and remove from the casing complete with the return pipe.
30. Undo the 2 M6 countersunk screws, remove the interpanel and transfer to the new heat engine.

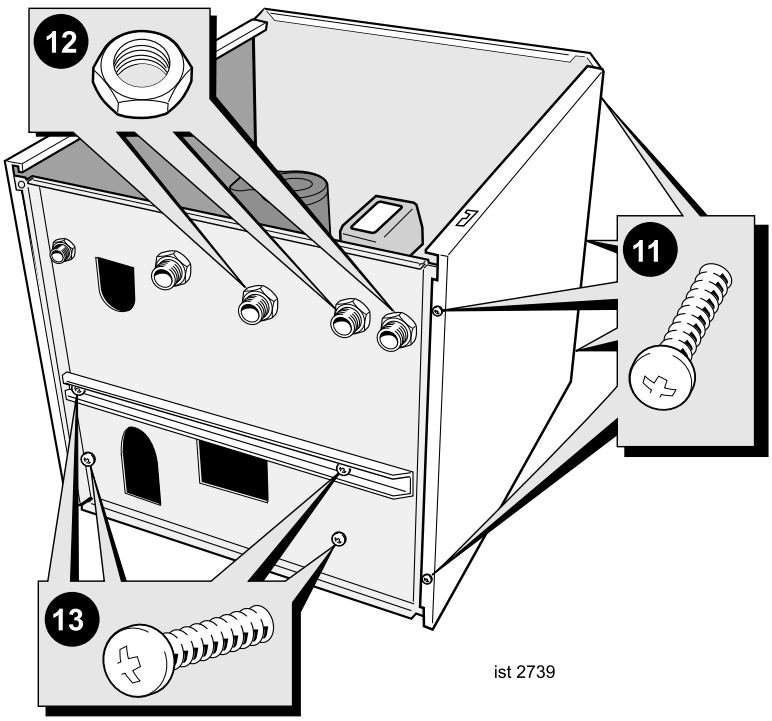

continued . . . . . .

94 HEAT ENGINE REPLACEMENT - continued

31. Undo the M5 screw and remove the flow pipe securing bracket.

32. Remove the flow pipe and transfer to the new heat engine.

33. Reassemble in reverse order, replacing gaskets or seals if any sign of damage or deterioration is evident.

Note.

The heat engine is supplied with new combustion chamber insulation boards. These should be fitted (refer to Frame 71) before the burner and fan / venturi assembly and before the ignition and detection electrodes are replaced.

34. Check operation of the boiler. Refer to Frame 49.

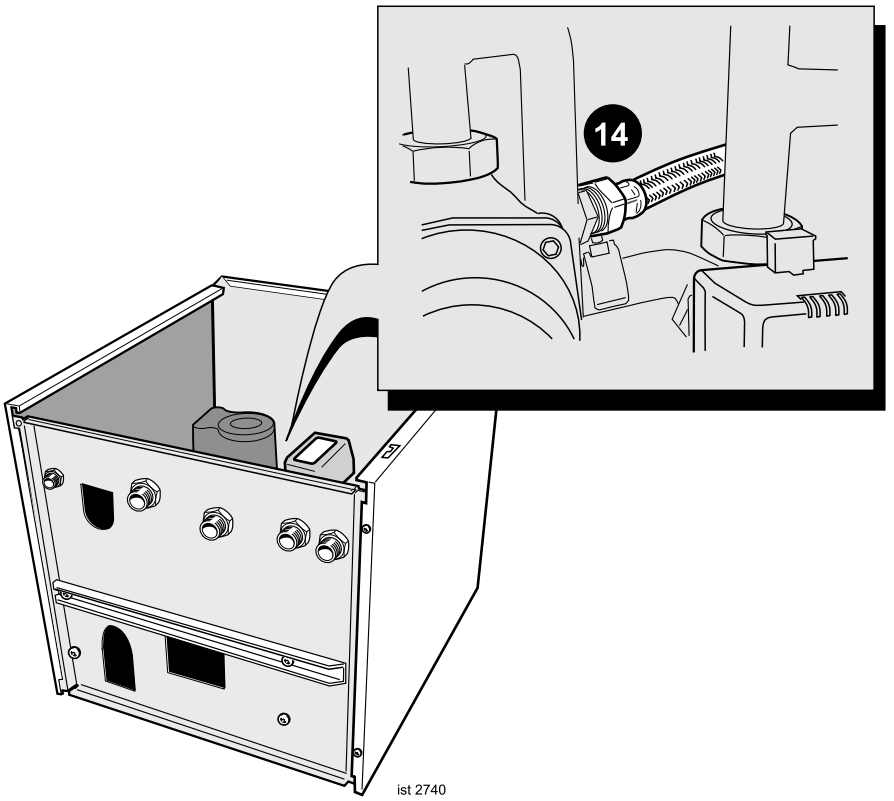

95 IMMERSION HEATER REPLACEMENT

Note.
The replacement immersion heater must be fitted with a thermal cut out.

1. Refer to Frame 53 & 54.

2. Remove the DHW expansion vessel. Refer to Frame 56.

3. Drain the cylinder. Refer to Frame 86.

4. Drain the boiler. Refer to Frame 85.

5. Undo the top connection on the pump and swing the pipe out of the way.

6. Undo the rear connection on the divertor valve and swing the pipe out of the way.

7. The immersion heater can now be removed and replaced through the access hole in the boiler module bottom panel.

8. Reassemble the appliance in reverse order.

9. Check operation of the boiler. Refer to Frame 49.

Note that module removal is NOT necessary. Image is shown removed only for clarity.

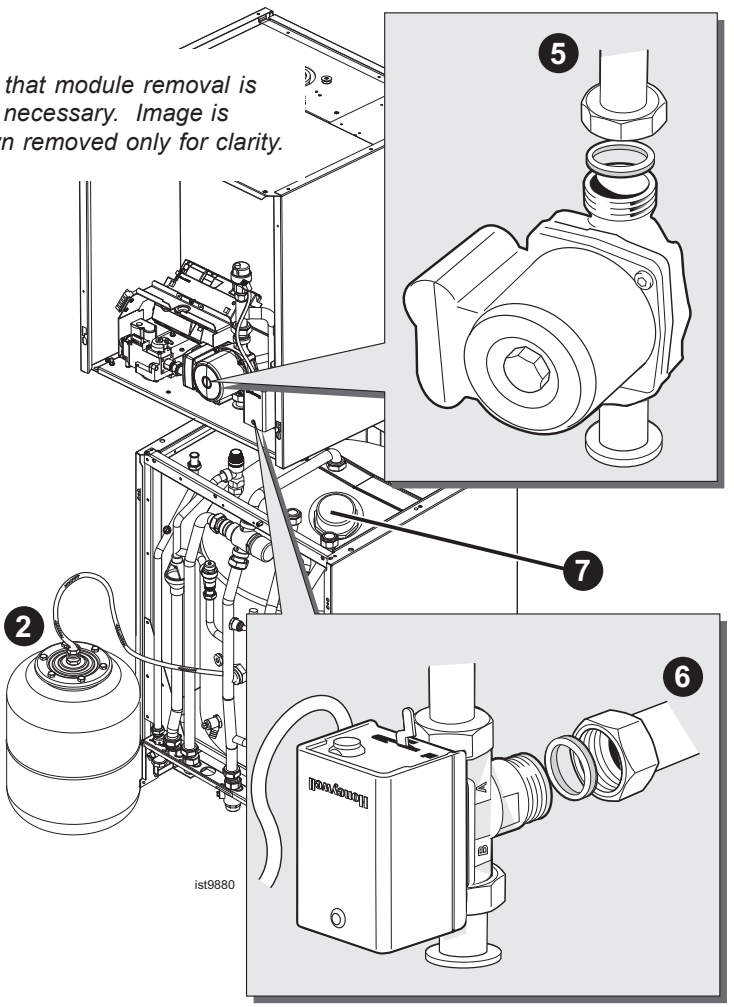

96 FAULT FINDING CHART MAIN MENU

In order to assist fault finding, the boiler has an LED diagnostic display. The key to the display codes is as follows:

'L' 'F'	GO TO FRAME 97
'L' 'E'	GO TO FRAME 98
'L' 'A'	GO TO FRAME 99
'L' '8'	GO TO FRAME 100
'H' '1'	GO TO FRAME 101
'H' '2'	GO TO FRAME 102
'H' '3'	GO TO FRAME 103
'H' '4'	GO TO FRAME 104
'H' 'F'	GO TO FRAME 105
'H' 'n'	GO TO FRAME 106
'H' 'E'	GO TO FRAME 98
'H9'	GO TO FRAME 104
'L9'	GO TO FRAME 104

97 L.....F..... (FLAME DETECTION)

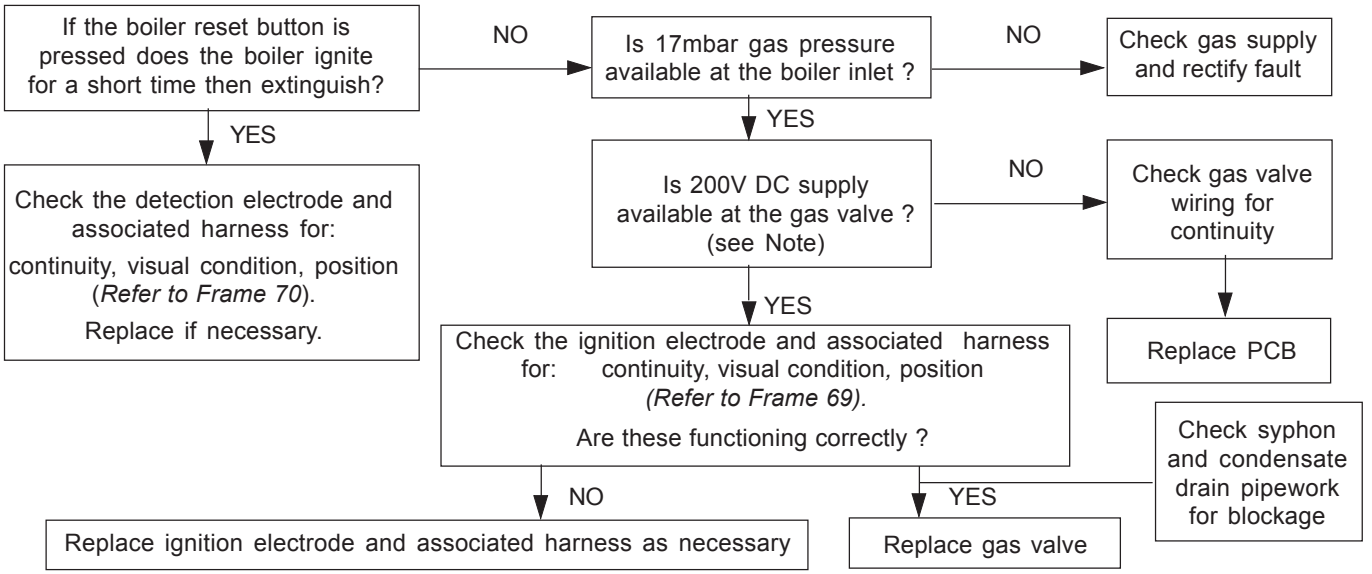

Note. *Due to the wave form of the rectified voltage, the reading will vary depending on the type of meter used to measure the value (some may measure the possible peak voltage of 339V). In general terms a reading greater than 150V indicate that the correct voltage is supplied to the gas valve.*

98 L.....E or H.....E..... (BOARD ERROR)

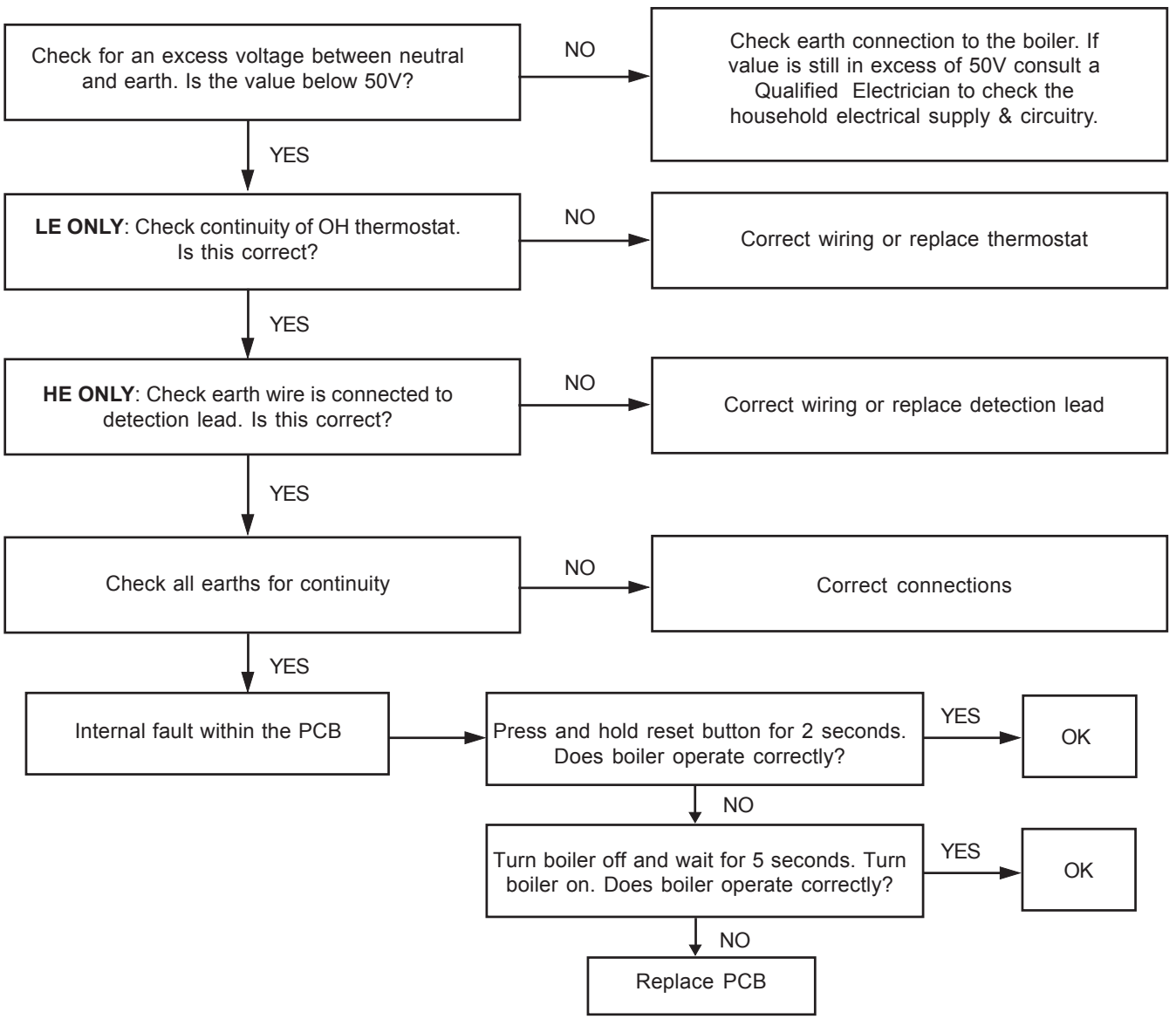

99 L.....A..... (OVER HEAT SENSOR)

Can the overheat condition be reset by pressing the boiler reset button when the system is cold ?

- NO → Replace overheat thermostat
- YES ↓

Is the boiler and CH system filled with water and all isolation valves open ?

- NO → Fill and vent the system and open all isolation valves
- YES ↓

Does the pump setting give a differential across the boiler in excess of 25 °C

- YES → Check that the pump is rotating freely. Is differential now below 25 °C ?
  - NO → Replace the system pump
  - YES → OK
- NO ↓

Set CH control knob to maximum.
If the overheat trips again measure the flow temp:

Over 90 °C Check control thermistor (*Refer to Frame 68*) .

Under 90 °C Replace overheat 'stat

Note.

With V9 Primary Control PCB, overheat LA/HA or H9/L9 when reset will display 3 horizontal lines and will not attempt to refire until the temperature in the heat exchanger drops below 50°C.

100 L....8..... (FAN)

Is nominal 330 V DC present across red and blue at the fan connector as reset button is pressed?

- YES → Is 14V DC present across yellow and pink at the fan connector?
  - YES → Replace fan
  - NO ↓
- NO → Check wiring harness for continuity. Is there continuity?
  - YES → Replace PCB
  - NO → Replace harness

101 H.....1..... (CONTROL TEMPERATURE SENSOR)

Remove the boiler control thermistor from the CH flow pipe and disconnect thermistor wires. →

Check resistance. The sensors can be checked by measuring their resistance, using a suitable multimeter connected across the sensors' terminal pins

At 25 °C	expect	9,700-10,300	Ohms
At 60 °C	expect	2,400-2,600	Ohms
At 85 °C	expect	1,000-1,100	Ohms

↓

Are the thermistor values correct ?

- NO → Replace the thermistor
- YES ↓

Is there continuity between the PCB and the thermistor ?

- YES → Replace PCB
- NO → Check and replace wiring as necessary

102 H.....2..... (RETURN TEMPERATURE SENSOR)

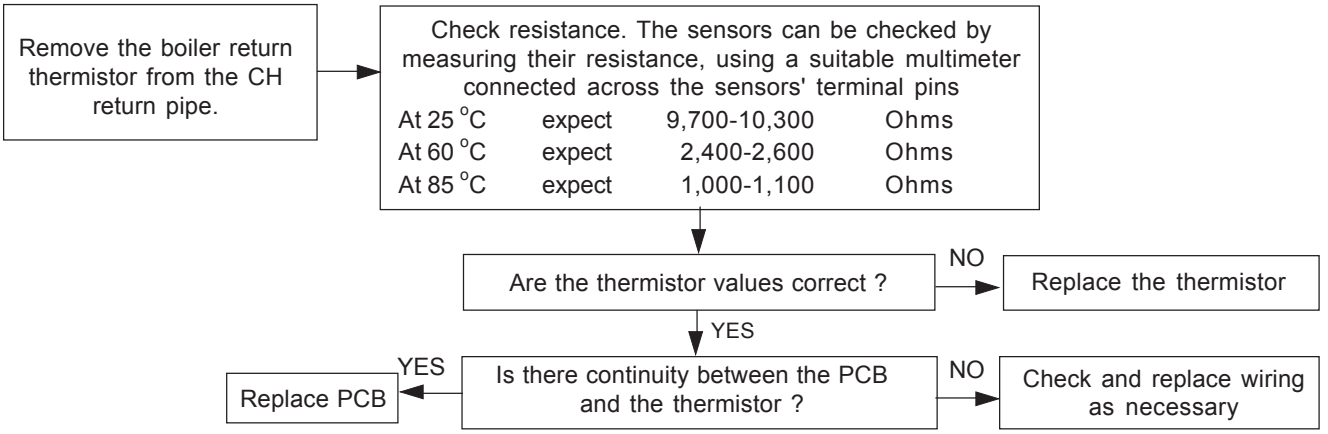

103 H.....3..... (DHW TEMPERATURE SENSOR)

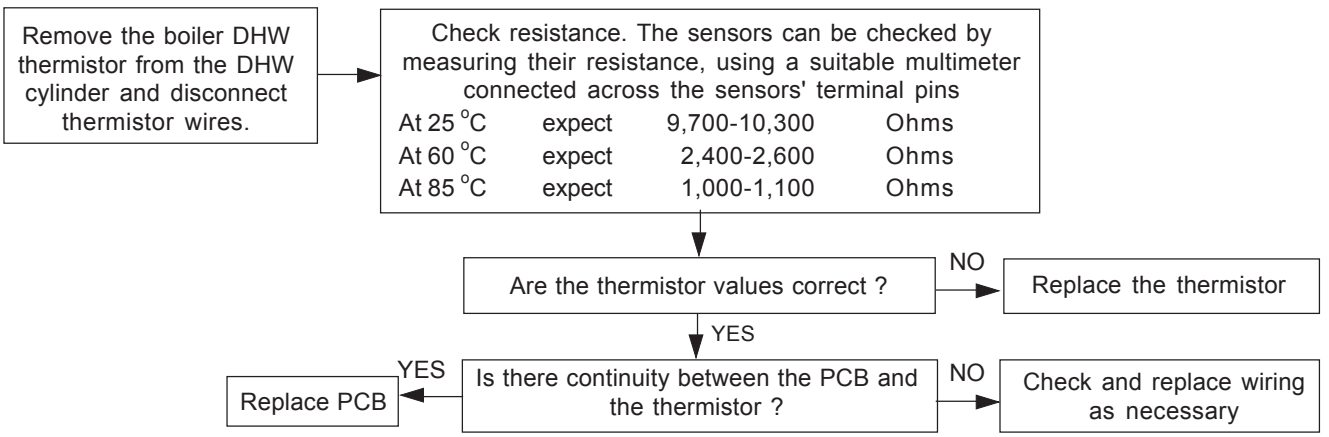

104 H.....4..... (DRY FIRE THERMISTOR)

Can the fault condition be reset by switching off the mains supply to the boiler ?

NO

Check wiring for continuity from the PCB to the dry fire thermistor

Check resistance. The sensors can be checked by measuring their resistance, using a suitable multimeter connected across the sensors' terminal pins

At 25 °C	expect	9,700-10,300	Ohms
At 60 °C	expect	2,400-2,600	Ohms
At 85 °C	expect	1,000-1,100	Ohms

Are thermistor values correct ?

YES → Replace PCB

NO → Replace thermistor

H9/L9 (HEAT EXCHANGER OVERHEAT)

Is the system filled and vented and all isolation valves open ?

Is the pump operating correctly? Ensure flow through system.

NO → Fill and vent the system and open all isolating valves

YES

Check resistance using a suitable multimeter connected across the dry fire thermistor's terminal pins

At 25 °C	expect	9,700-10,300	Ohms
At 60 °C	expect	2,400-2,600	Ohms
At 85 °C	expect	1,000-1,100	Ohms

Are thermistor values correct ?

YES → Inspect heat exchanger for blockage or damage in the flueways. Clean or replace as necessary

NO → Replace thermistor

Note.

With V9 Primary Control PCB, overheat LA/HA or H9/L9 when reset will display 3 horizontal lines and will not attempt to refire until the temperature in the heat exchanger drops below 50°C.

105 H.....F..... (FLAME DETECTION)

Is there continuity between the detection electrode terminal at the PCB and earth ?

NO → Check the detection electrode for continuity and visual condition. Replace if necessary.

YES → Replace detection electrode

106 H.....n..... (PHASE REVERSAL)

Check wiring to the boiler for reversed live and neutral

SHORT LIST OF PARTS

The following are parts commonly required due to damage or expendability. Their failure or absence is likely to affect safety or performance of this appliance.

The list is extracted from the British Gas List of Parts, which contains all available spare parts.

The full lists is held by British Gas Services, **Ideal Stelrad Group** distributors and merchants.

When ordering spares please quote:

1. Boiler model - istor HE260, HE325.
2. Appliance G.C. Nos.
   HE260 41-394-13, HE325 41-394-14.
3. Description.
4. Quantity.
5. Product number.

When replacing any part on this appliance, use only spare parts that you can be assured conform to the safety and performance specification that we require. Do not use reconditioned or copy parts that have not been clearly authorised by Ideal Boilers.

Key No.	G.C. Part No.	Description	Qty.	Product Number
7	E67-489	Burner	1	170 905
8	H07-660	Combustion chamber insulation	1	173 520
10	E67-492	Injector and housing	1	170 908
12	E85-097	Fan assembly	1	172 625
14	E69-286	Automatic air vent	1	170 988
16	H07-663	Gas control valve Honeywell VK4115V	1	173 151
20	E67-501	Control/Return thermistor	2	170 917
21	E67-502	Overheat thermostat	1	170 918
22	H07-664	Ignition electrode	1	175 406
23	H07-665	Flame detection electrode	1	173 529
27	E67-511	Condensate 'S' trap	1	170 926
29	H07-670	itime programmer (user control)	1	174 487
30	H07-671	PCB primary controls (includes plastic housing)	1	174 486
31	E67-519	Fuse PCB (T3.15AT L250V)	1	170 931
33	H07-673	Mains switch	1	173 161
34	H07-731	Spark generator	1	173 538
34A	H07-790	Ignition lead	1	175 424
38	E67-527	Gasket kit (servicing)	1	170 938
44	E68-376	Seal kit (sealing panel)	1	171 014
81	H07-708	DHW expansion vessel	1	173 193
82	H07-709	CH expansion vessel	1	173 194
83	H27-675	Pump	1	173 938
84	H07-711	Pump Head	1	175 393
85	H07-712	Diverter valve complete	1	173 197
90	H07-716	Temp & pressure relief valve	1	173 202
91	H07-717	CH pressure relief valve	1	173 203
92	H07-718	DHW pressure relief valve	1	173 204
97	H07-723	Thermistor cylinder	1	173 209
101	H07-729	Pressure gauge	1	173 213
103	H29-018	Dry fire thermistor	1	174 087

107 SHORT PARTS LIST

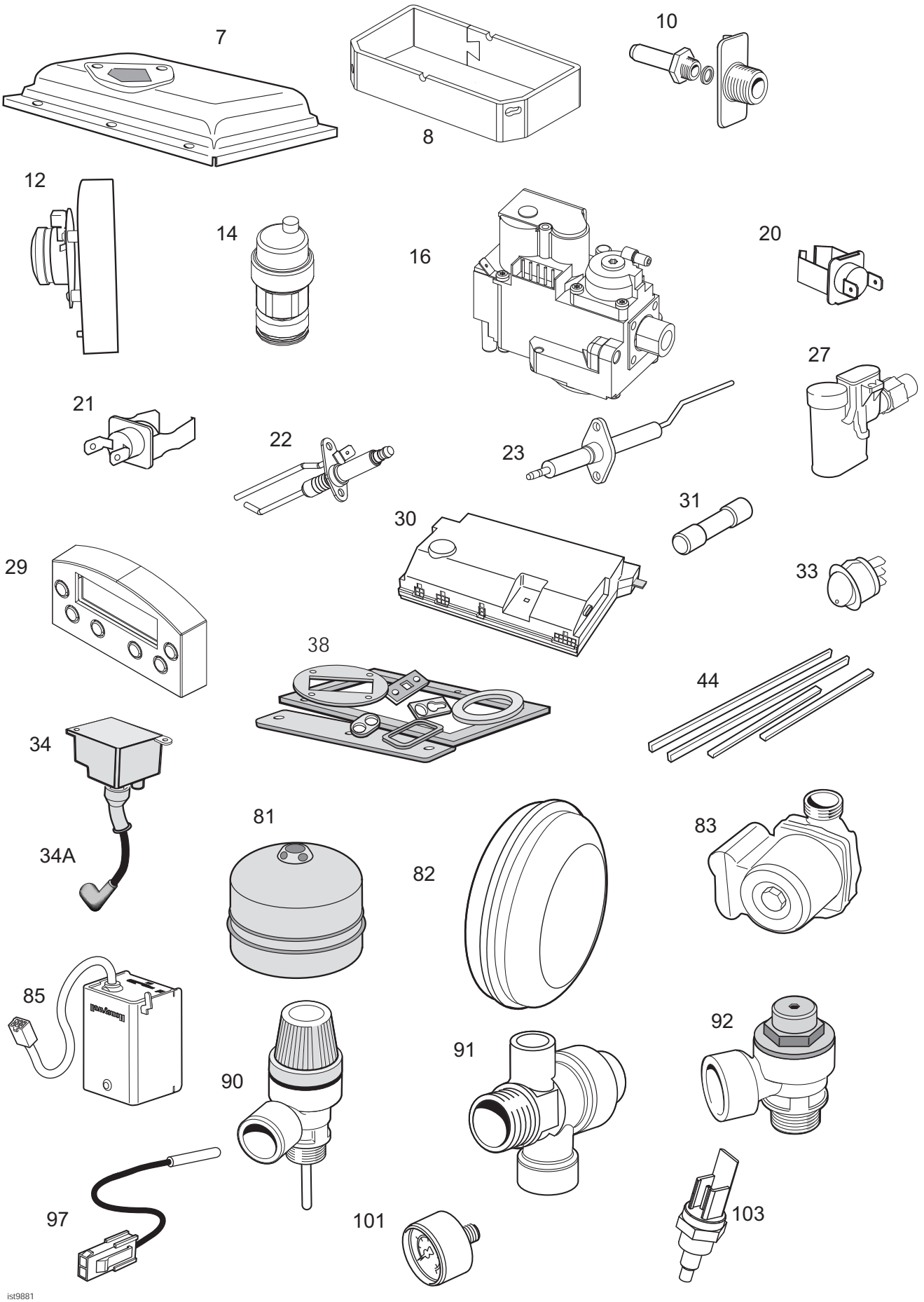

108 BOILER CASING ASSEMBLY

1. Sealing panel with screws.

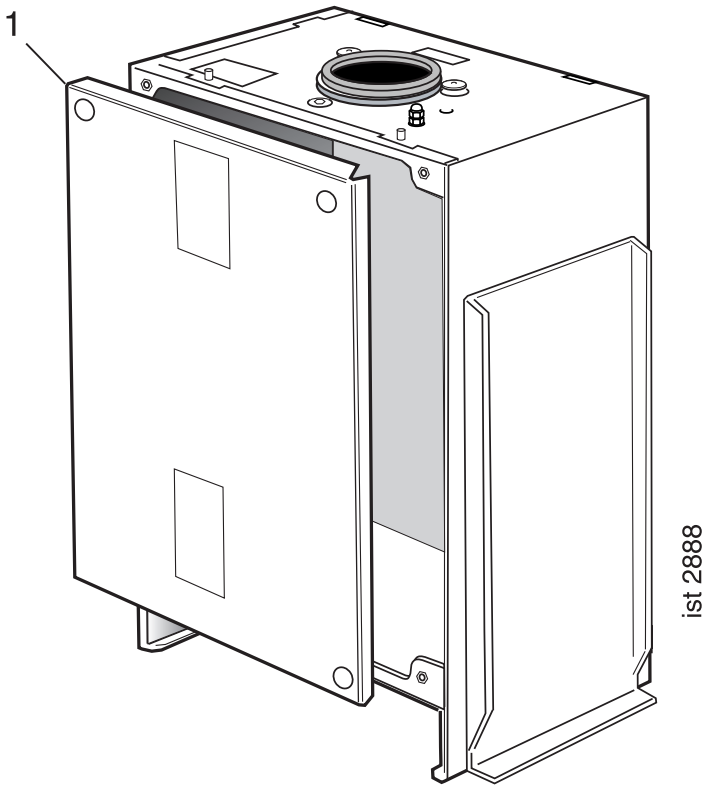

109 BURNER ASSEMBLY

7. Burner assembly with screws and gasket.

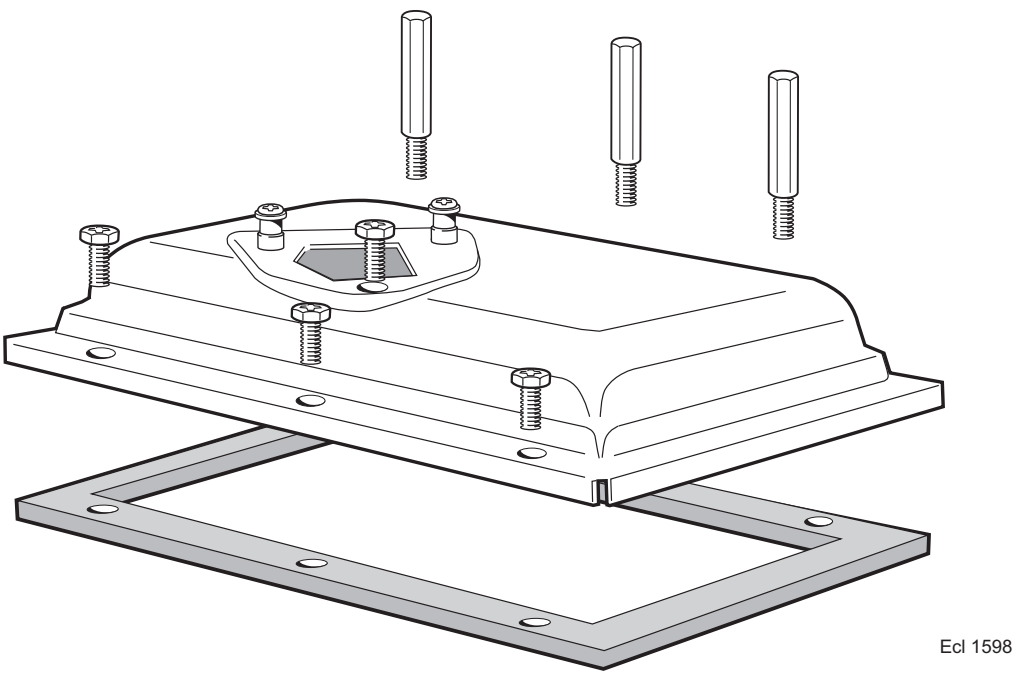

Code Of Practice

For the installation, commissioning and servicing of domestic heating and hot water products

Benchmark places responsibilities on both manufacturers and installers.* The purpose is to ensure that customers** are provided with the correct equipment for their needs, that it is installed, commissioned and serviced in accordance with the manufacturer's instructions by competent persons and that it meets the requirements of the appropriate Building Regulations. Installers are required to carry out work in accordance with the following:

Standards of Work

- Be competent and qualified to undertake the work required.
- Install, commission, service and use products in accordance with the manufacturer's instructions provided.
- Ensure that where there is responsibility for design work, the installation is correctly sized and fit for purpose.
- Meet the requirements of the appropriate Building Regulations. Where this involves notifiable work be a member of a Competent Persons Scheme or confirm that the customer has notified Local Authority Building Control (LABC), prior to work commencing.
- Complete all relevant sections of the Benchmark Checklist/Service Record when carrying out commissioning or servicing of a product or system.
- Ensure that the product or system is left in a safe condition and, whenever possible, in good working order.
- Highlight to the customer any remedial or improvement work identified during the course of commissioning or servicing work.
- Refer to the manufacturer's helpline where assistance is needed.
- Report product faults and concerns to the manufacturer in a timely manner.

Customer Service

- Show the customer any identity card that is relevant to the work being carried out prior to commencement or on request.
- Give a full and clear explanation/demonstration of the product or system and its operation to the customer.
- Hand over the manufacturer's instructions, including the Benchmark Checklist, to the customer on completion of an installation.
- Obtain the customer's signature, on the Benchmark Checklist, to confirm satisfactory demonstration and receipt of manufacturer's instructions.
- Advise the customer that regular product servicing is needed, in line with manufacturers' recommendations, to ensure that safety and efficiency is maintained.
- Respond promptly to calls from a customer following completion of work, providing advice and assistance by phone and, if necessary, visiting the customer.
- Rectify any installation problems at no cost to the customer during the installer's guarantee period.

benchmark
COLLECTIVE MARK
THE MARK OF QUALITY FOR THE INSTALLATION, COMMISSIONING AND SERVICING OF DOMESTIC HEATING AND HOT WATER SYSTEMS

*The use of the word "installer" is not limited to installation itself and covers those carrying out installation, commissioning and/or servicing of heating and hot water products, or the use of supporting products (such as water treatment or test equipment).
**Customer includes householders, landlords and tenants.

© Heating and Hotwater Industry Council (HHIC)

INSTALLER NOTIFICATION GUIDELINES

A change to Building Regulations (England and Wales) requires the installer to notify when installing a heating appliance, as from 1st April 2005.

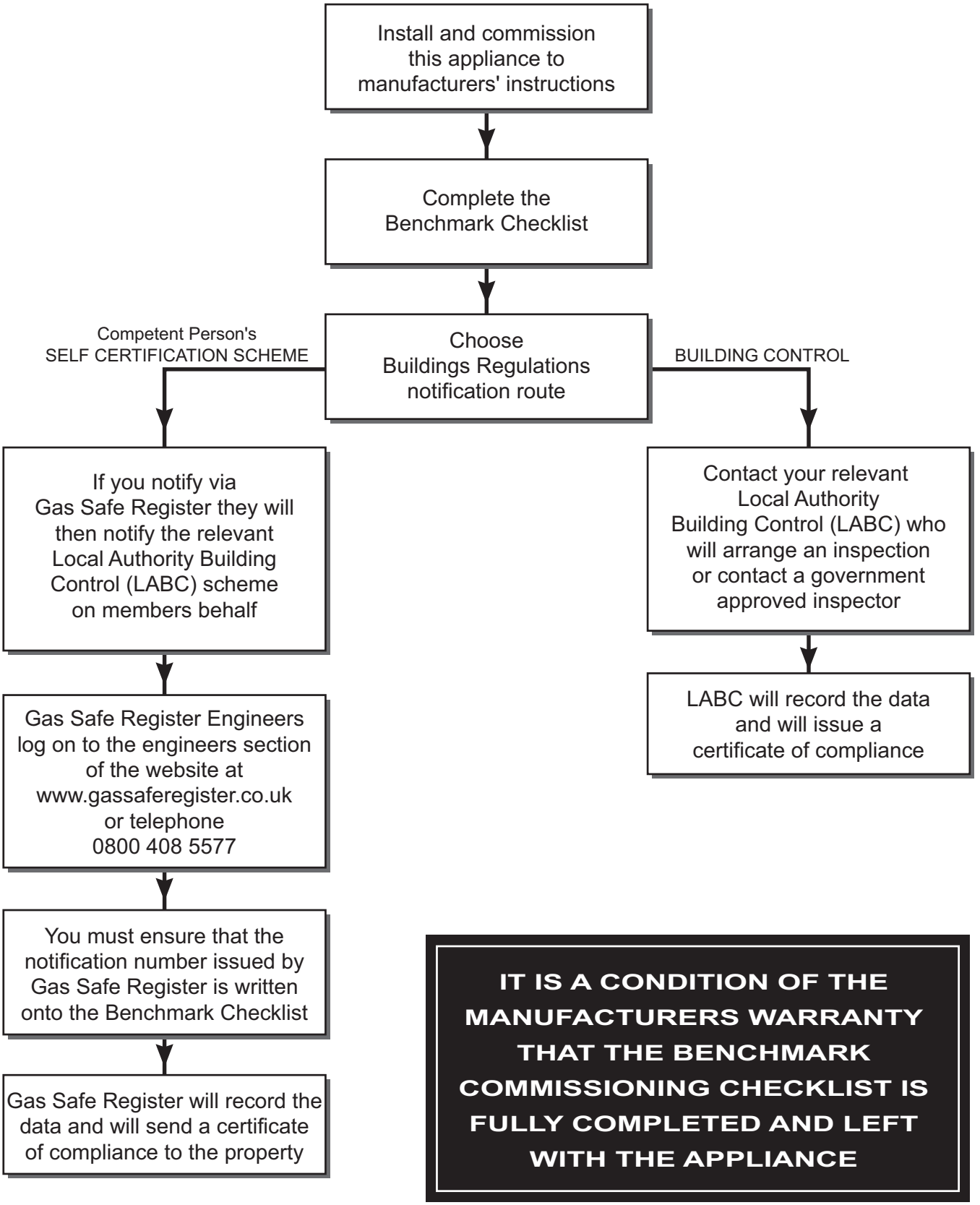

IT IS A CONDITION OF THE MANUFACTURERS WARRANTY THAT THE BENCHMARK COMMISSIONING CHECKLIST IS FULLY COMPLETED AND LEFT WITH THE APPLIANCE

GAS BOILER SYSTEM COMMISSIONING CHECKLIST

This Commissioning Checklist is to be completed in full by the competent person who commissioned the boiler as a means of demonstrating compliance with the appropriate Building Regulations and then handed to the customer to keep for future reference.

Failure to install and commission this equipment to the manufacturer's instructions may invalidate the warranty but does not affect statutory rights.

Customer Name ______________________ Telephone Number ______________________

Address ______________________

Boiler Make and Model ______________________

Boiler Serial Number ______________________

Commissioned by *(print name)* ______________________ Gas Safe Register ID Number ______________________

Company Name ______________________ Telephone Number ______________________

Company Address ______________________

______________________ Commissioning Date ______________________

To be completed by the customer on receipt of a Building Regulations Compliance Certicate *:

Building Regulations Notification Number *(if applicable)* ______________________

CONTROLS Tick the appropriate boxes

Time and Temperature Control to Heating	Room Thermostat and Programmer/Timer ☐	Programmable Room Thermostat ☐	Load/Weather Compensation ☐	Optimum Start Control ☐
Time and Temperature Control to Hot Water			Cylinder Thermostat and Programmer/Timer ☐	Combination Boiler ☐
Heating Zone Valves			Fitted ☐	Not Required ☐
Hot Water Zone Valves			Fitted ☐	Not Required ☐
Thermostatic Radiator Valves			Fitted ☐	Not Required ☐
Automatic Bypass to System			Fitted ☐	Not Required ☐
Boiler Interlock				Provided ☐

ALL SYSTEMS

The system has been flushed and cleaned in accordance with BS7593 and boiler manufacturer's instructions Yes ☐

What system cleaner was used? ______________________

What inhibitor was used? ______________________ Quantity ☐ *litres*

CENTRAL HEATING MODE Measure and Record:

Gas Rate ☐ m^3/hr OR ☐ *ft^3/hr*

Burner Operating Pressure (if applicable) ☐ mbar OR Gas Inlet Pressure ☐ mbar

Central Heating Flow Temperature ☐ *°C*

Central Heating Return Temperature ☐ *°C*

COMBINATION BOILERS ONLY

Is the installation in a hard water area (above 200ppm)? Yes ☐ No ☐

If yes, has a water scale reducer been fitted? Yes ☐ No ☐

What type of scale reducer has been fitted? ______________________

DOMESTIC HOT WATER MODE Measure and Record:

Gas Rate ☐ m^3/hr OR ☐ *ft^3/hr*

Burner Operating Pressure (at maximum rate) ☐ mbar OR Gas Inlet Pressure (at maxiumum rate) ☐ mbar

Cold Water Inlet Temperature ☐ *°C*

Hot water has been checked at all outlets Yes ☐ Temperature ☐ *°C*

Water Flow Rate ☐ *l/min*

CONDENSING BOILERS ONLY

The condensate drain has been installed in accordance with the manufacturer's instructions and/or BS5546/BS6798 Yes ☐

ALL INSTALLATIONS

If required by the manufacturer, record the following CO_2 ☐ % OR CO ☐ *ppm* OR CO/CO_2 Ratio ☐

The heating and hot water system complies with the appropriate Building Regulations Yes ☐

The boiler and associated products have been installed and commissioned in accordance with the manufacturer's instructions Yes ☐

The operation of the boiler and system controls have been demonstrated to and understood by the customer Yes ☐

The manufacturer's literature, including Benchmark Checklist and Service Record, has been explained and left with the customer Yes ☐

Commissioning Engineer's Signature ______________________

Customer's Signature ______________________

(To confirm satisfactory demonstration and receipt of manufacturer's literature)

*All installations in England and Wales must be notified to Local Authority Building Control (LABC) either directly or through a Competent Persons Scheme. A Building Regulations Compliance Certificate will then be issued to the customer.

benchmark COLLECTIVE MARK
THE MARK OF QUALITY FOR THE INSTALLATION, COMMISSIONING AND SERVICING OF DOMESTIC HEATING AND HOT WATER SYSTEMS

©Heating and Hotwater Industry Council (HHIC)

SERVICE RECORD

It is recommended that your heating system is serviced regularly and that the appropriate Service Record is completed.

Service Provider

Before completing the appropriate Service Record below, please ensure you have carried out the service as described in the manufacturer's instructions.

Always use the manufacturer's specified spare part when replacing controls.

SERVICE 1 Date

Energy Efficiency Checklist completed? Yes ☐ No ☐

Engineer Name

Company Name

Telephone Number

Gas Safe Register ID Number

Comments

Signature

SERVICE 2 Date

Energy Efficiency Checklist completed? Yes ☐ No ☐

Engineer Name

Company Name

Telephone Number

Gas Safe Register ID Number

Comments

Signature

SERVICE 3 Date

Energy Efficiency Checklist completed? Yes ☐ No ☐

Engineer Name

Company Name

Telephone Number

Gas Safe Register ID Number

Comments

Signature

SERVICE 4 Date

Energy Efficiency Checklist completed? Yes ☐ No ☐

Engineer Name

Company Name

Telephone Number

Gas Safe Register ID Number

Comments

Signature

SERVICE 5 Date

Energy Efficiency Checklist completed? Yes ☐ No ☐

Engineer Name

Company Name

Telephone Number

Gas Safe Register ID Number

Comments

Signature

SERVICE 6 Date

Energy Efficiency Checklist completed? Yes ☐ No ☐

Engineer Name

Company Name

Telephone Number

Gas Safe Register ID Number

Comments

Signature

SERVICE 7 Date

Energy Efficiency Checklist completed? Yes ☐ No ☐

Engineer Name

Company Name

Telephone Number

Gas Safe Register ID Number

Comments

Signature

SERVICE 8 Date

Energy Efficiency Checklist completed? Yes ☐ No ☐

Engineer Name

Company Name

Telephone Number

Gas Safe Register ID Number

Comments

Signature

SERVICE 9 Date

Energy Efficiency Checklist completed? Yes ☐ No ☐

Engineer Name

Company Name

Telephone Number

Gas Safe Register ID Number

Comments

Signature

SERVICE 10 Date

Energy Efficiency Checklist completed? Yes ☐ No ☐

Engineer Name

Company Name

Telephone Number

Gas Safe Register ID Number

Comments

Signature

Technical Training

The Ideal Boilers Technical Training Centre offers a series of first class training courses for domestic, commercial and industrial heating installers, engineers and system specifiers.
For details of courses please ring: 01482 498 432

benchmark
COLLECTIVE MARK
THE MARK OF QUALITY FOR THE INSTALLATION, COMMISSIONING AND SERVICING OF DOMESTIC HEATING AND HOT WATER SYSTEMS

The code of practice for the installation, commissioning & servicing of central heating systems

BSI

CERTIFIED PRODUCT
Manufactured under a BS EN ISO 9001: 1994 Quality System accepted by BSI

Ideal Boilers, P.O. Box 103, National Ave, Kingston upon Hull, HU5 4JN. Telephone: 01482 492 251 Fax: 01482 448 858. Registration No. London 322 137.

Ideal Stelrad Group pursues a policy of continuing improvement in the design and performance of its products. The right is therefore reserved to vary specification without notice.

CE

Ideal BOILERS
The High Efficiency Pioneers

Ideal Stelrad Group

Ideal Installer/Technical Helpline: 01482 498 663
www.idealboilers.com