INTERGAS®

spares & parts online
IBASIS.co.uk©

Combi Compact

HRE 24/18 (G.C. 47-291-01)

HRE 28/24 (G.C. 47-291-02)

HRE 36/30 (G.C. 47-291-03)

HRE 36/40 (G.C. 47-291-04)

Installation, service and user instructions

Please read these installation instructions carefully before installing and using the appliance. Keep these installation instructions with the appliance.

Always act in accordance with the instructions indicated.

Benchmark places responsibilities on both manufacturers and installers. The purpose is to ensure that customers are provided with the correct equipment for their needs, that it is installed, commissioned and serviced in accordance with the manufacturer's instructions by competent persons and that it meets the requirements of the appropriate Building Regulations. The Benchmark Checklist can be used to demonstrate compliance with Building Regulations and should be provided to the customer for future reference. Please read the Benchmark Checklist carefully, page 50, and complete all sections, as required by law, relevant to the appliance and installation. The details within the Checklist will be required in the event of any warranty work. On completion the Checklist must be left with the end user. The relevant sections of the Service Record, page 51, must be completed on each subsequent Service visit.

Installers are required to carry out installation, commissioning and servicing work in accordance with the Benchmark Code of Practice which is available from the Heating and Hotwater Industry Council who manage and promote the scheme. Visit www.centralheating.co.uk for more information.

CONTENT

1 Preface 4
1.1 Regulation 4
1.2 Warnings 4
1.3 Manual handling 4
1.4 Warnings on the box 4
1.5 Pictograms 4
1.6 Abbreviations and descriptions used 5
1.7 This manual 5
1.8 Service and technical support 5
1.9 Product identification 5

2 Safety regulations 6
2.1 General 6
2.2 The Installation 6
2.3 Approvals 6
2.4 Technical data 7
2.5 Components 8

3 General boiler information 9
3.1 General 9
3.2 Boiler controller 9
3.3 Parameter list 9
3.4 Heat transfer 9
3.5 Central heating system 9
3.6 Room temperature control 9
3.7 Integrated clock 9

4 Operation 10
4.1 General 10
4.2 Central heating mode 10
4.3 Domestic hot water mode 10
4.4 Operating modes 10
4.5 Clock function 12
4.6 PC interface 12
4.7 Test programs 12
4.8 Frost protection 13

5 Installer important points 14

6 Accessories 15

7 Installation 17
7.1 Overall dimensions 17
7.2 Installation location 18
7.3 Assembly 19
7.4 Installing the appliance 20

8 Connection 21
8.1 Connecting CH installation 21
8.2 Connecting DHW installation 22
8.3 Electrical connection 23
8.4 Condensate disposal 25
8.5 Flue system 26

9 Commisioning the appliance 29
9.1 Filling and venting the appliance and the installation ... 29
9.2 Commissioning the appliance ... 31
9.3 Setting and adjusting the clock functions ... 32
9.4 Additional functions ... 32
9.5 Shutting down ... 33

10 Setting and adjustment 34
10.1 Directly via the operating panel ... 34
10.2 Setting via the service code ... 35
10.3 Parameters ... 35
10.4 Setting maximum CH power ... 36
10.5 Adjusting pump setting ... 36
10.6 Weather– compensation adjustment ... 37
10.7 Checking gas-/air ratio ... 38
10.8 Setting gas/air adjustment procedure ... 39
Examples : ... 40
10.9 Conversion to different gas type ... 40

11 Faults 41
11.1 Fault codes ... 41
11.2 Other faults ... 41

12 Maintenance 44
12.1 Disassembly ... 44
12.2 Cleaning ... 44
12.3 Assembly ... 45
12.4 Combustion ... 45

13 Electrical diagram 46
13.1 NTC resistances ... 47

14 Short spares list 48

15 Warranty Conditions 49

16 CE Declaration 49

17 Gas Boiler System Commisioning Checklist 50

18 Service Record 51

© 2013 Intergas Heating Ltd. All rights reserved.

The information provided applies to the standard version of the product. Intergas Heating Ltd cannot therefore be held liable for any loss or damage arising from product specifications deviating from the standard version. The available information has been compiled with all possible care, but Intergas Heating Ltd cannot be held liable for any errors in the information or for the consequences thereof.

Intergas Heating Ltd cannot be held liable for any loss or damage arising from work performed by third parties.

Subject to change.

1 PREFACE

1.1 Regulation

The Intergas combination boiler meets the requirements of Statutory Instrument 'The Boiler (Efficiency) Regulations' and is deemed to meet the requirements of:

- Gas Appliance Directive 2009/142/EC
- Boiler Efficiency Directive 92/42/EEC
- Low Voltage Directive 2006/95/EC and
- Electromagnetic Compatibility Directive 2004/108/EC

Intergas declares that the materials used in the manufacturing of this appliance are non-hazardous and that no substances harmful to health are contained within the appliance.

1.2 Warnings

Intergas accepts no responsibility for the unsatisfactory performance of the appliance or flue arising from the failure to comply with the installation and user instructions. Incorrect installation could invalidate your guarantee and may lead to prosecution.

If the appliance is re-sold or installation transferred the appliance must be re-registered with Intergas in order to maintain the warranty.

The boiler must be installed in accordance with these instructions and the regulations currently in force. Read these instructions carefully before installing or using the appliance. It is the installers responsibility that the installation conforms to the current legislation and Standard Codes of Practice.

1.3 Manual handling

When moving the boiler always keep your back straight, bend your knees, don't twist, move your feet. Avoid bending forwards or sideways and keep the load as close to your body as possible. Where possible transport the boiler using a suitable trolley, sack truck or get some assistance. Grip the boiler firmly and before lifting establish where the weight is concentrated to determine the centre of gravity, repositioning yourself if necessary.

1.4 Warnings on the box

This is a fragile piece of equipment: Please provide a dry storage for the appliance.

This is a fragile piece of equipment: Please be very careful not to drop.

Store the appliance in a flat position as indicated on the box.

No more than three boxes should be stacked on top of each other.

1.5 Pictograms

The following pictograms are used in this manual:

CAUTION

Procedures which – if they are not performed with the necessary caution – can result in damage to the product, the surrounding area or the environment, or in physical injury.

WARNING HIGH VOLTAGE

Risk of electrical shock.

FROST PROTECTION

Procedures which must be followed to prevent frost damage.

1.6 Abbreviations and descriptions used

Description	Referred to as
High efficiency	HE
Intergas Combi Compact HRE wall mounted gas fired boiler	Appliance
Appliance plus pipe work for central heating	CH installation
Appliance plus pipe work for domestic hot water	DHW installation

1.7 This manual

This manual will enable you to assemble, install and maintain the appliance safely. Follow the instructions carefully. In case of doubt contact the manufacturer. Keep these installation instructions with the appliance or with the gas meter.

1.8 Service and technical support

For information about specific adjustments, installation, maintenance and repair work, please contact:

Intergas Heating Ltd
Building 94, Bay 1 Vantage Point
The Pensnett Estate
Kingswinford
West Midlands
DY6 7FS
Tel: 01527 888000
Fax: 01384 279480
info@intergasheating.co.uk
www.intergasheating.co.uk

1.9 Product identification

You will find the appliance data on the data plate on the underside of the appliance.

- Model
- G.C. registration number
- Heat input (net) [kW]
- Heat output CH [kW]
- Appliance category
- Gas type
- Gas supply pressure [mbar]
- NOx class
- Appliance type
- Maximum CH pressure [bar]
- Maximum DHW pressure [bar]
- Maximum Flow temperature [°C]
- Electrical supply
- Protection
- PIN
- Serial number
- Production year

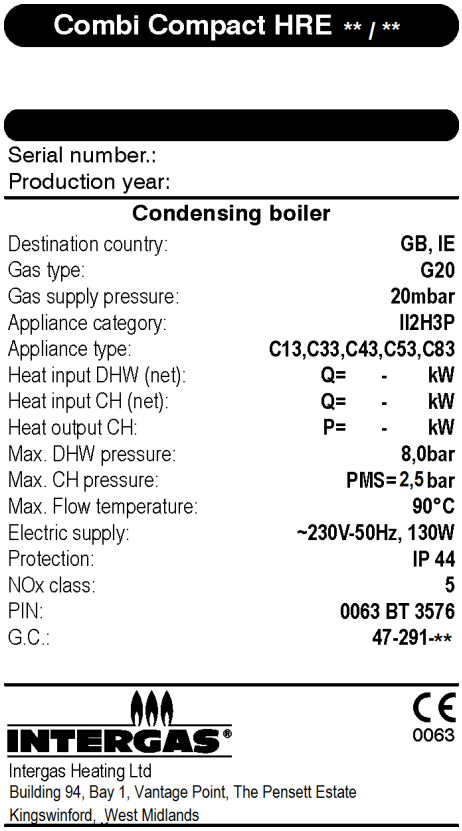

2 SAFETY REGULATIONS

The manufacturer Intergas Heating Ltd accepts no liability whatsoever for damage or injury caused by failure to adhere (strictly) to the safety regulations and instructions, or carelessness during installation of the Intergas Combi Compact HRE High Efficiency wall mounted gas fired boiler and any associated accessories.

2.1 General

It is law that all gas appliances are installed by a Gas Safe registered competent engineer and in accordance with the following recommendations:

- Current Gas Safety (Installation and Use) Regulations
- All current building regulations
- Building Standards (Scotland) Consolidated
- This appliance must be installed in accordance with the Gas (Safety and Use) Regulations, current Building Regulations, Building Standards (Scotland), I.S.813 Installation of Gas Appliances (Ireland), IEE Wiring Regulations (BS 7671), Health and Safety Document No. 635 (Electricity at Work Regulations) and Local Water Authority Bye Laws
- UK Water Regulations and Bye Laws
- Health & Safety

2.2 The Installation

The installation must comply with the following British Standards codes of practice:

- BS 5440: Flues and Ventilation for gas appliances of rated input not exceeding 70kW (Part 1 Flues)
- BS 5440: Flues and Ventilation for gas appliances of rated input not exceeding 70kW (Part 2 Air Supply)
- BS 5546: 2000 Installation of gas hot water supplies for domestic purposes.
- BS 5549: 1990 Forced circulation hot water systems
- BS 6700: 1997 Design, Installation, testing and maintenance of services supplying hot water
- BS 6798: 2000 Specification for installation of gas fired hot water boilers of rated input not exceeding 70kW
- BS 6891: 1998 Installation of low pressure gas pipe-work installations up to 35mm (RI)
- BS 7593: 1992 Code of practice for treatment of water in heating systems
- BS 7671: 2001 Requirements for electrical installations, IEE Wiring regulations

Reference should also be made to:

- Guide to condensing boiler installation assessment procedures for dwellings
- The institute of Gas Engineers document IGE/UP/7 for timber frame dwellings

2.3 Approvals

Natural Gas

Intergas Combi Compact HRE Pre-mix Condensing Combination Boiler

British Gas Service Listing:

Combi Compact HRE 36/40	G.C.N. 47-291-04
Combi Compact HRE 36/30	G.C.N. 47-291-03
Combi Compact HRE 28/24	G.C.N. 47-291-02
Combi Compact HRE 24/18	G.C.N. 47-291-01

Notified /Body

Gastec	0063BT3576	Directive 90/396/EEC Directive 92/42/EEC

The Intergas Combi Compact HRE range of central heating boilers are manufactured from high quality materials and designed for reliability and optimum performance.

Intergas is committed to the continual development of their appliances and reserves the right to make changes without notification to ensure their customers benefit from the latest advances in combustion technology and energy conservation.

2.4 Technical data

Appliance category	C13; C33; C43; C53; C83
Gas supply pressure	20 mbar -G20 ; 37 mbar – G31
Gas Category	II2H3P

Technical data Combi Compact HRE		**24/18**	**28/24**	**36/30**	**36/40**
Gas Council number		G.C. 47-291-01	G.C. 47-291-02	G.C. 47-291-03	G.C. 47-291-04
DHW					
Input	kW	5.6 – 22.1	7.1 – 28.0	7.6 – 32.7	7.8 – 32.7
DHW threshold	l/min	2	2	2	2
DHW Flow Rate at 40°C	l/min	10	12.5	15	15
DHW Flow Rate at 60°C	l/min	6	7.5	9	9
∆T 25 °C	l/min	12	15	18	18
∆T 35 °C	l/min	8.5	10,5	13	13
DHW temperature (factory setting)	°C	55	55	55	55
Max. DHW water pressure	bar	8	8	8	8
DHW side pressure loss	KPa	See § 8.2.2	See § 8.2.2	See § 8.2.2	See § 8.2.2
CH					
Nom. Input rating (lower value)*	kW	5.6 – 18.7	7.1 – 23.7	7.6 – 27.0	7.8 – 42.5
Rated power*	kW	6.1 – 18.2	7.7 – 23.1	8.2 – 26.6	8.3 - 40.9
Max. CH water pressure	bar	2.5	2.5	2.5	2.5
Max. CH water temperature	°C	90	90	90	90
Other data					
Gas consumption (G20)	m^3/h	0.58 – 2.29	0.75 – 2.91	0.79 – 3.39	0.80 – 4.41
Gas consumption (G31)	m^3/h	0.22 – 0.87	0.28 – 1.11	0.30 – 1.29	0.31 –1.68
Appliance pressure loss (CH)	mWk	See § 10.5	See § 10.5	See § 10.5	See § 10.5
NOx class natural gas		5	5	5	5
NOx class LPG		5	4	5	5
Electrical data					
Mains power	V	230	230	230	230
Safety class	IP	IP44	IP44	IP44	IP44
Power consumption : full load	W	130	130	130	190
Power consumption: partial load	W	40	40	40	40
Power consumption: standby	W	2	2	2	2
Boiler dimensions and weight					
Height	mm	590	650	710	710
Width	mm	450	450	450	450
Depth	mm	240	240	240	240
Weight	kg	30	33	36	36

(*) The maximum CH power is factory set at 70% of the highest value (See section §10.4, Setting maximum CH power).

We have a policy for continual improvement and development, therefore we reserve the right to change specifications without prior notice.

2.5 Components

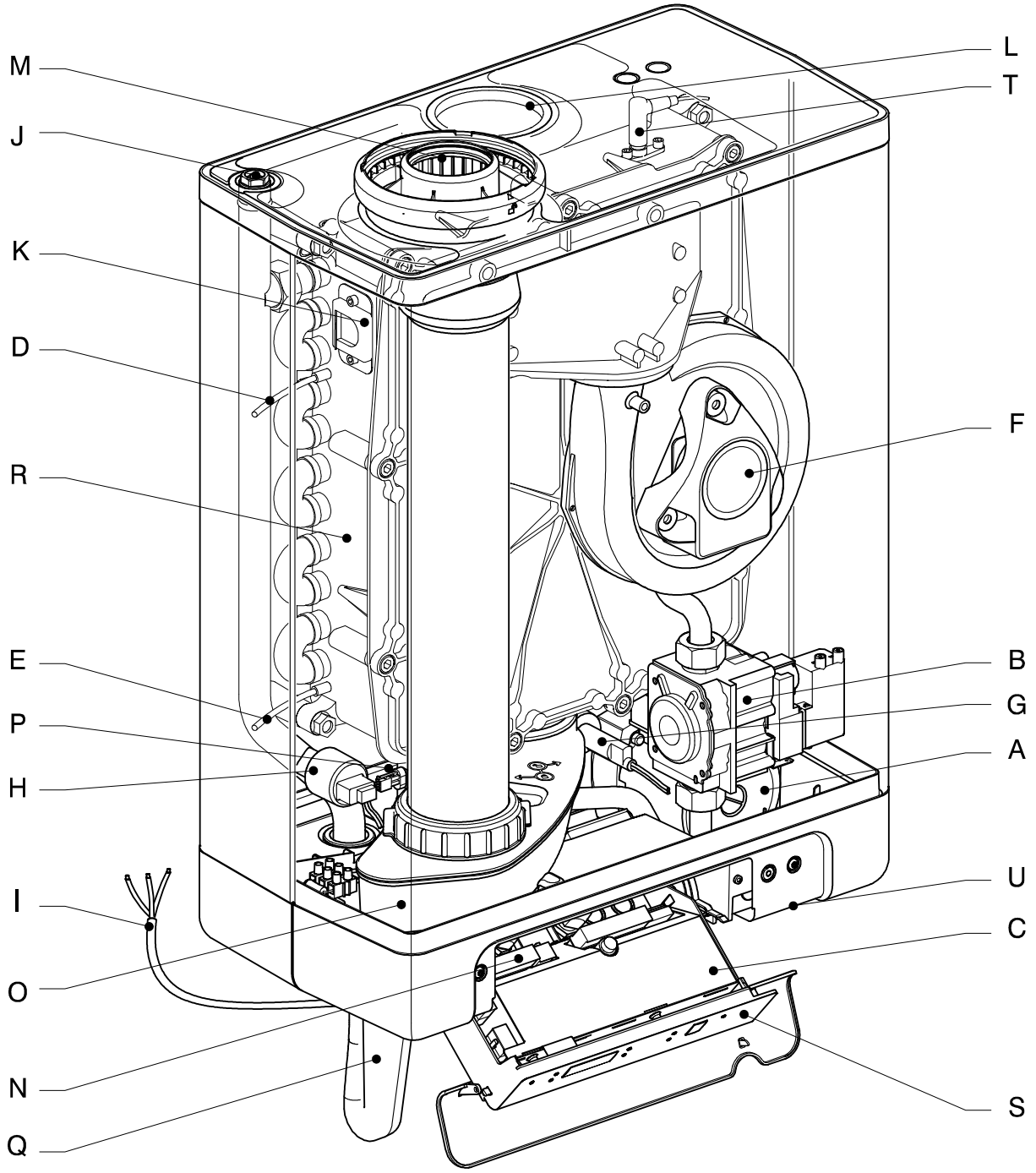

A. CH pump
B. Gas valve
C. Boiler controller
D. Sensor S1
E. Sensor S2
F. Fan
G. Flow switch
H. CH pressure sensor
I. Mains lead 230 V AC without plug (stripped)
J. Manual air bleed
K. Sight glass
L. Air supply cap
M. Flue pipe adapter (only to be used in combination with the accompanying elbow in flue sets).
N. Connection block / terminal strip X4
O. Condensate drain pan
P. Hot water sensor S3
Q. Condensate trap
R. Heat exchanger
S. Operating panel and read-out
T. Ionisation / Ignition electrode
U. Position of data plate

3 GENERAL BOILER INFORMATION

3.1 General

The Intergas Combi Compact HRE wall mounted, gas fired boiler is a closed appliance. The appliance is designed to transfer heat to the water circuit in a CH system and the DHW installation.

The air supply and combustion gas flue connection is as standard prepared for a concentric 60/100 horizontal flue system. The appliance can be connected to a wall mounting jig and expansion vessel. The appliance can also be connected without the wall mounting jig using the robo kit.

The Intergas Combi Compact HRE wall mounted gas fired boiler carries the CE rating and IP44 electrical protection.

The HRE 36/30 and HRE 36/40 are suitable for supplying at least 13 litres of water per minute at 35°C temperature arise. The HRE 28/24 is suitable for supplying at least 10.5 litres of water per minute and the HRE 24/18 is suitable for supplying at least 8.5 litres of water per minute.

It is possible to use the appliance solely for hot water or solely for heating. The unused system does not have to be connected. The parameters have to be set accordingly.

The appliance is supplied as standard for natural gas (G20). For usage of propane gas (G31) the boiler can be modifed by changing the gas injector. A gas conversion kit can be ordered at Intergas Heating Ltd.

Note

Modification of the boiler can only be done by a qualified competent person.

3.2 Boiler controller

An electronic control unit, consisting of a boiler controller and separate ignition module which is placed on the gas valve, provides direct burner ignition and flame supervision along with continuous modulation of the burner's gas supply.

3.3 Parameter list

All boiler adjustments are accessible through the parameter list in the software.

3.4 Heat transfer

Heat transfer to the boiler's heating and DHW circuit is obtained via a primary, gas to water heat exchanger within a hermetically sealed combustion chamber. A modulated speed fan blows the gas/air mixture into the combustion chamber and expels the products of combustion to outside air via an associated flue system.

3.5 Central heating system

An integral pump located in the boilers hydraulic circuit circulates water through the heat exchanger to the central heating circuit. During DHW demand the pump stops functioning, so all the heat is directly transferred to the integrated DHW circuit and no transfer losses occur. In the event of reduced or interrupted water circulation in the central heating circuit, an automatic system by-pass should be fitted as far away from the boiler as possible.

Note

It is no longer permissible to utilize a non-thermostatic controlled radiator as a by-pass.

3.6 Room temperature control

Room temperature can be controlled by the use of an external room thermostat and thermostatic radiator valves.

Note

Connection of the room thermostat is dependant on the operating voltage of the thermostat.

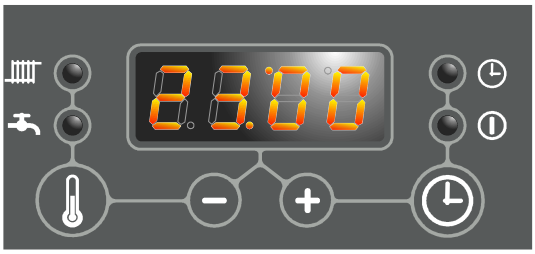

3.7 Integrated clock

The boiler incorporates an integrated clock, which allows the setting of central heating periods (See the User Instructions, 'Operation and display read-out' for details) and the boiler's control panel incorporates an LED display, which indicates the state of operation and fault defect codes.

4 OPERATION

4.1 General

The Intergas Combi Compact HRE wall mounted, gas fired boiler is a modulating high efficiency boiler. This means that the power is adjusted in line with the desired heat requirement. The aluminium heat exchanger comprises of two separate copper circuits. As a result of the separately constructed circuits for CH and DHW the heating and hot water supply can operate independently of each other. The hot water supply takes priority over the heating. The two systems cannot operate simultaneously.

The appliance is equipped with an electronic boiler controller which, each time heat is requested from the heating or the hot water supply, starts the fan, opens the gas valve, ignites the burner and continuously monitors and controls the flame, depending on the requested output.

By setting a parameter the boiler can be set to operate either on domestic hot water only, heating only or DHW and heating.

It is possible to use the boiler's DHW circuit without connecting and filling the central heating system.

Note

Domestic hot water demand draws preference over heating. During heating periods the boiler will automatically revert back to heating mode, after a draw off of hot water.

4.2 Central heating mode

When a heating demand is requested (power is on, the timer and thermostat are calling for heat) the integral pump is energised and the boiler will fire automatically. The hot water is now circulated around the central heating system. When the end of the central heating demand is reached (the thermostat reaches temperature or the time clock reaches the end of its set period) the burner will shut down while the pump remains functioning during a preset period of time to dissipate any excess heat from within the boiler's heat-exchanger. After that the boiler will revert to stand-by, waiting to respond to the next heating or hot water demand.

During the heating period a call for hot water will take preference over heating.

4.3 Domestic hot water mode

When there is a request for hot water (flow switch closes) the boiler will fire automatically. When on this moment a heating demand was answered the pump will immediately stop so all the heat can be used to heat up the DHW.

When the request for hot water ends and the request for heating is still present it is possible to create a delay (1 – 15 minutes) in answering this request by adjusting the parameter [o] (See § 10.3).

4.4 Operating modes

A code on the service display of the operating panel indicates the appliance's operating mode.

[-] Off

The appliance is out of operation but is supplied with electrical power. No response occurs to calls for DHW or CH. The appliance frost protection is active. This means that the pump operates and the exchanger is heated up if the temperature of the water present in it falls too far.

If the frost protection is actuated, code [7] is displayed (heating the exchanger).

In this operating mode the pressure in the CH installation (in Bar) can also be read on the main display.

[ ] Waiting mode

The LED at the ⏻ button is lit and possibly one of the LEDs for the DHW comfort function. The appliance is ready to respond to a request for CH of DHW.

0 Pump overrun of CH

After the end of CH operation the pump continues to run. The running time is factory set at the value in accordance with § 10.3. This setting can be changed.

In addition, the pump runs automatically for 10 seconds once every 24 hours in order to prevent seizing. This automatic switching on of the pump occurs at the time of the last call for heat. To change the time, the room thermostat setting should be increased briefly at the desired time.

1 Boiler shutdown when required temperature reached

The boiler controller can temporarily shut down the request for heat. The burner is then stopped. Shutdown occurs because the requested temperature has been reached. When the temperature has fallen sufficiently and the anti cycle time has passed the shutdown is cancelled.

2 Self-test

The connected sensors are checked regularly by the boiler controller. During the check the boiler controller does not perform any other tasks.

3 Ventilation

When the appliance is started the fan is first brought to starting speed. When the starting speed has been reached the burner is lit. Code 3 is also visible when post-ventilation is taking place after the burner has stopped.

4 Ignition

When the fan has reached the starting speed, the burner is ignited by means of electrical sparks. During ignition the code 4 is visible. If the burner does not ignite, a new ignition attempt occurs after approximately 15 seconds. If after 4 ignition attempts the burner is not yet burning, the boiler controller goes into fault mode (See § 11.1).

5 CH operation

An on/off thermostat, an OpenTherm thermostat, an external sensor or a combination of the latter can be connected to the boiler controller.

When a request for heat is received from a thermostat, the fan is started (code 3), followed by ignition (code 4) and CH operating mode (code 5).

During CH operation the fan speed and hence the appliance power are controlled by the boiler controller so that the CH water temperature reaches the desired CH supply temperature.

If an on/off thermostat is connected, this is the CH supply temperature set on the display. In the case of an OpenTherm thermostat the desired CH supply temperature is determined by the thermostat. In the case of an external sensor the desired CH suppply temperature is determined by the heating line programmed in the boiler controller. For the latter two, however, the maximum is the temperature set on the display.

During CH operation the requested CH supply temperature is indicated on the operating panel.

The CH supply temperature can be set between 30°C and 90°C.

When the DHW comfort function is switched on (See code 7) any OpenTherm request for heat of less than the value of par. E is ignored.

6 DHW operation

The hot water supply takes priority over the heating. If the flow switch detects a need for more than 2 l/min of DHW, any demand for CH will be interrupted. After the fan has reached speed code 3 and ignition has taken place code 4 the boiler controller goes to DHW mode code 6.

During DHW operation the fan speed, and hence the power of the appliance, are controlled by the boiler controller so that the DHW water temperature reaches the DHW temperature setting.

The water temperature can be set between 40°C and 65°C (See § 10.1.6).

7 Pre-heating facility

To enable fast delivery of domestic hot water the boiler controller is equipped with a DHW comfort function. This function maintains the temperature of the heat exchanger to a pre defined temperature. The DHW comfort function has the following settings:

- **On:** *(① LED on)* The appliance's DHW comfort function is switched on continuously. In this mode the heat exchanger will be kept on temperature to assure instant delivery of DHW.
- **Eco:** *(⌛ LED on)* The appliance's DHW comfort function is self learning. The appliance will adapt to the patttern of use of the hot water tap. As a result, the temperature of the heat exchanger will not be maintained during the night or in case of lengthy absence.
- **Off:** *(Both LEDs off)* The temperature of the heat exchanger is not maintained, as a result of which the delivery of hot tapwater takes a little time. If there is no need for fast delivery of hot tapwater, the DHW comfort function can be switched off.

4.5 Clock function

The boiler is equipped with a digital clock and offers the possibility to program 4 points in time to switch from CH off or CH on.
During the "clock active" periods the boiler will respond on CH demands from the room thermostat. During the "clock inactive" periods the boiler will not respond on CH demands.

Additionally the following special modes can be chosen:

1. t-on (temporary on).
   The boiler will respond to every CH demand from the room thermostat until the next switch moment.
2. c-on (continuous on).
   The boiler will respond to every CH demand from the room thermostat without any time limit.
3. OFF.
   The boiler will not respond to any CH demand from the room thermostat.

Note
For setting and adjusting the clock see § 9.3 Setting and adjusting the clock functions.

4.6 PC interface

The boiler controller is equipped with an interface for a PC, which can be connected by means of a special cable and associated Intergas Diagnostic Software (IDS). This facility allows the behaviour of the boiler controller, the appliance and the heating installation to be monitored over a longer period.

4.7 Test programs

The boiler controller has a facility for placing the appliance in test mode. Activation of a test program will result in the appliance starting operation at a fixed fan speed, without the control functions being actuated. The safety functions do remain active. The test program is ended by pressing the + and − simultaneously or will end automaticaly after 10 minutes.

Test programs

Program description	Button combinations	Display reading
Burner on at minimum power	🔧 and −	"L"
Burner on with maximum CH power setting (See § 10.3, parameter 3)	🔧 and + (1x)	"h"
Burner on with maximum DHW power (See § 10.3 , parameter 4)	🔧 and + (2x)	"H"
Switch off test program	+ and −	Actual situation

4.8 Frost protection

FROST PROTECTION

To prevent freezing the appliance is equipped with an internal frost protection. If the heat exchanger temperature falls too low, the burner switches on and the pump runs until the heat exchanger temperature is sufficient. When the appliance frost protection is activated the symbol code 7 is displayed (pre heating the heat exchanger).

If the installation (or a part of it) is in danger of freezing, an (external) frost thermostat must be fitted to the return line at the coldest location. This must be connected in accordance with the wiring diagram (See § 8.3).

Note

If the appliance is out of operation (- on the service display) the appliances internal frost protection is still active. However, this means there will be no response to a request for heat from an (external) frost thermostat.

5 INSTALLER IMPORTANT POINTS

Please read all instructions before fitting this appliance

- The installer shall instruct the user on the operation of the boiler, safety devices contained within the boiler and on the location of the filling loop and how to re-pressurise the system if the water pressure falls.
- The installer should then hand over the instructions indicating the included Benchmark Commissioning Checklist that has been completed.
- It is required under Gas Safe Regulations for the installation to be notified to Building Control (Gas Safe Notifcation).
- Before proceeding to commission the boiler check the gas inlet pressure is 20mbar (NG) or 37mbar for Propane.
- Combustion analysis with a correctly calibrated and certificated analyser is essential for safe commissioning of the boiler.
- A pressure reducing valve set to 3.5 bar must be fitted if supply mains pressure is above 4 bar.
- A suitable scale reducer must be fitted if water hardness is above 200 ppm.
- The user should be instructed to keep the instructions in a safe place for servicing and future reference.
- It is important to keep the boiler clear of dust during the installation. In particular, do not allow debris to enter the flue connection at the top.
- Before fitting the boiler ensure that the pipe work that you are installing is connected to the appropriate connections on the boiler.
  It is important to thoroughly flush the water circuits, after isolating the boiler, in order to remove any fluxes and debris from them. This should be done particularly where boilers are being fitted to existing radiator circuits (please refer to current Standard Codes of Practice).
- BS 7593:2006 for the details to clean DHW and Central heating system).
- This boiler has been factory set but adjustment may be required to the heating input in order to match the individual heating demand. This can be done by changing parameter 3 (= max. power CH) or parameter 4 (= max. power domestic water).
- Please do not use the pressure relief valve as a means of flushing the system.
- Remember that after hot water draw of a possible delay may occur before the heating system will fire up.
- All fluxes, residues and cleaner must be flushed from pipe-work and radiators prior to commissioning.
- External expansion vessels are best connected water side downwards to allow correct draining/cleaning of system and to prolong the life of the vessel diaphragm.
- Note: an anti-cycle delay time can be set up to a maximum of 15 minutes by adjusting parameter P as described in § 10.3.
- If you experience any problems please refer to the installation and commissioning guidelines within the boiler instruction manual. If necessary, please contact Intergas Heating Ltd (See § 1.8).

Remember it is a requirement to complete the Benchmark code of practice logbook before leaving the installation. You are also required to register the boiler through the Gas Safe registration scheme.

6 ACCESSORIES

Description	Article number	
Pipe cover set (incl. mounting material)	093217	
Outside sensor	203207	
Wall mounting jig + exp. vessel 8 litres HRE 36/30 and HRE 36/40	093207	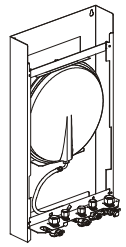
Wall mounting jig + exp. vessel 8 litres HRE 28/24	093197	
Wall mounting jig + exp. vessel 8 litres HRE 24/18	093187	
Sampling cap	847000	
Bend 45°	084661	
Bend 90°	084660	
Deflector kit	081295	
Weather slate (steep roof)	087910	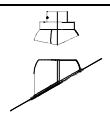
Weather slate (flat roof)	087372	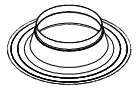
Extension L = 100 incl. wall bracket	082975	
Horizontal telescopic offset wall terminal *Only to be used in combination with the base adapter on the boiler*	081298	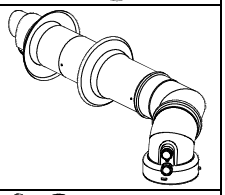
Horizontal straight wall terminal extended *Only to be used in combination with the base adapter on the boiler*	082980	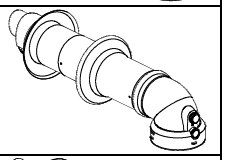
Horizontal telescopic wall terminal *Only to be used in combination with the base adapter on the boiler*	081297	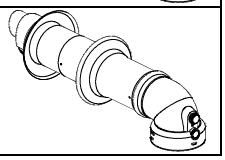

Description	Article number	
Vertical roof terminal *(incl. boiler adapter 60/100)*	082973	
Plume management kit	081294	
Elbow 90° (for plume management kit)	081284	
Elbow 60° (for plume management kit)	081285	
Extension L = 100 incl. wall bracket (for plume management kit)	081286	
Robo kit 12 litres	090000	
Robo kit 8 litres	090100	

7 INSTALLATION

7.1 Overall dimensions

Appliance with CH, DHW and gas connections backwards:

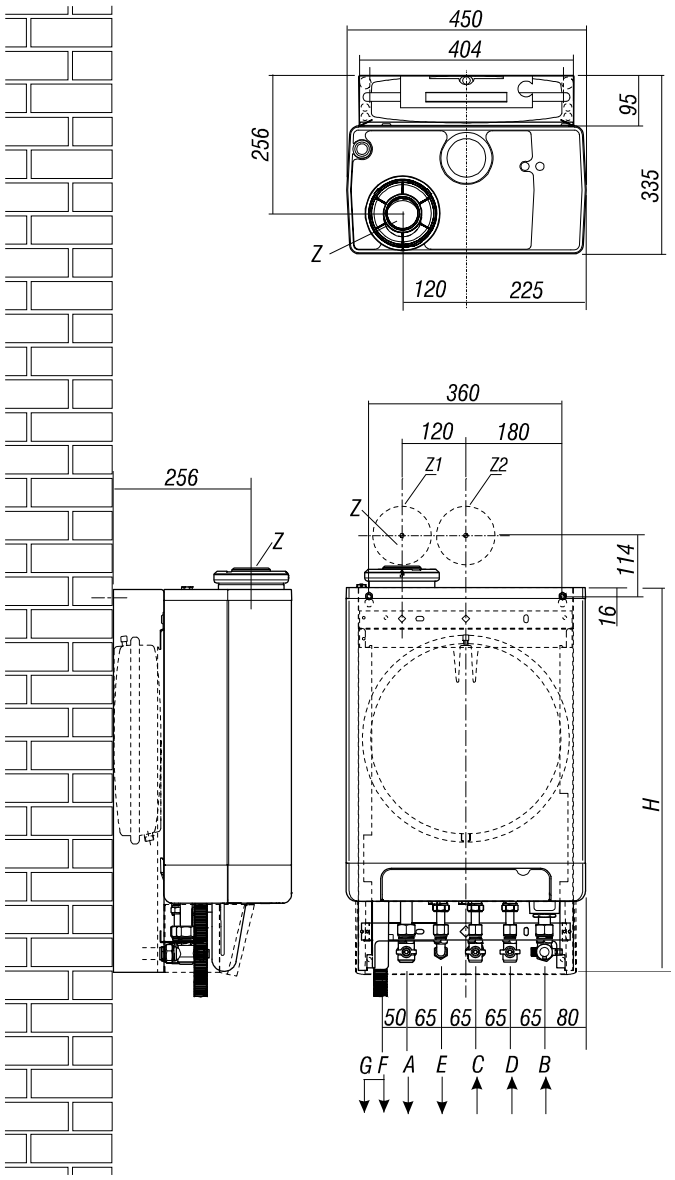

Appliance + wall mounting jig + bracket

A =	Supply CH	Ø22
B =	Return CH	Ø22
C =	Gas	½”
D =	Cold tap water	Ø15
E =	DHW	Ø15
F =	Condensate drain	Ø25 (flexible)
G =	Drain PRV	Ø15
H =	840	Combi Compact HRE 36/30 & HRE 36/40
H =	780	Combi Compact HRE 28/24
H =	720	Combi Compact HRE 24/18
Z =	Flue pipe / air supply	Ø60/100 (concentric)

7.2 Installation location

- If the boiler is to be installed in any room or compartment, it does not require any purpose made ventilation for combustion air. If sited in a room containing a bath or shower then particular reference is drawn to the current I.E.E. Wiring Regulations, local Building Regulations or any other local regulations currently in service.
- The boiler is not suitable for external installation unless protected by a purpose made building such as a boiler house.
- The following clearances are recommended for installation purposes: 200 mm above, 300 mm below and 10 mm at each side. 500 mm is required at the front but this may be realized by opening a cupboard door.
- Flammable fluids and materials must be stored at least 1 metre away from the boiler.
- The wall on which the boiler is mounted must be sufficiently strong to support the weight of the boiler.

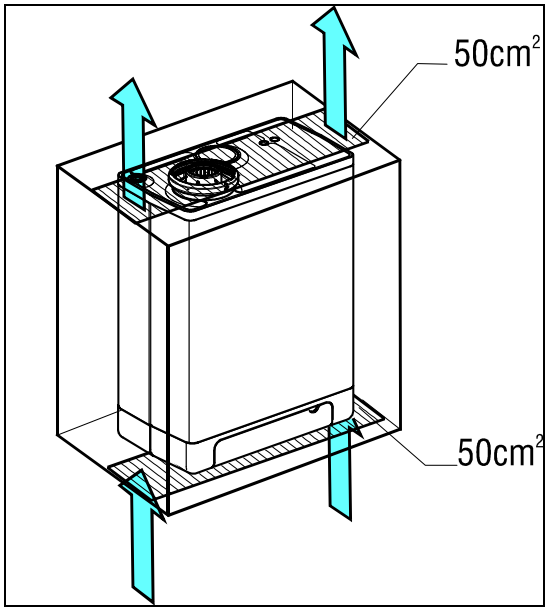

7.2.1 Installing in a kitchen cupboard

The appliance can be installed between two kitchen cabinets or in a cabinet. Ensure sufficient ventilation at top and bottom. When installed in a cabinet, ventilation openings of at least 50 cm^2 must be created at the top and bottom of the appliance to ensure free flow of air.

7.2.2 Removing cover plate and front panel

For various work on the appliance the cover plate and front panel should be removed from the appliance. Proceed as follows:

- If cover plate (A), is used, remove to the front.
- Unscrew the two screws (1) behind the appliance display window.
- Pull the bottom of the front panel (2) forwards.

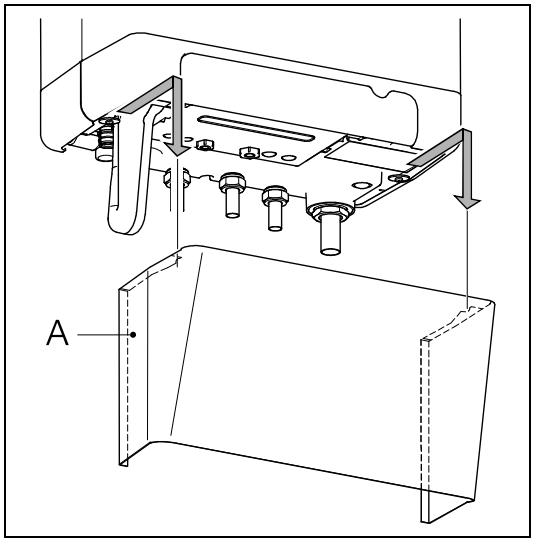

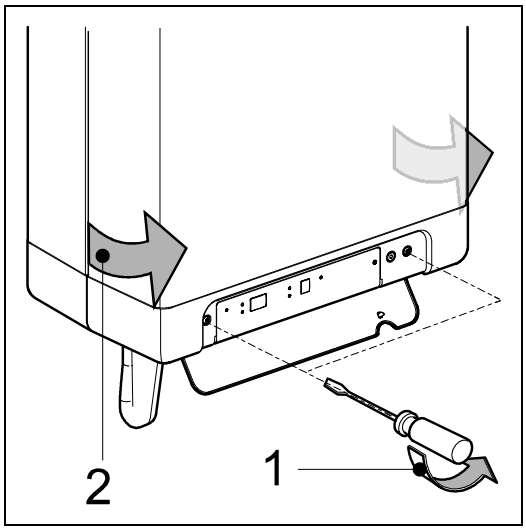

7.3 Assembly

The boiler can be mounted either on the fixing strip which is supplied in the box or to a wall mounting jig with an expansion vessel.

The wall mounting jig includes an expansion vessel and shut off valves.

If the fixing strip is used an external ROBO kit must be fitted as well.

7.3.1 Using the wall mounting jig + mounting bracket

- Using the fastening materials supplied, secure the jig vertically to the wall. Make sure the wall is suitable for placing the boiler.
- Secure the bracket with the shut-off valves in the jig by inserting it with the flanged side upwards through the openings (sleeves) in the jig.

  Note
  The appliance is wider than the jig.
- Install the CH heating system and the DHW system to the valves.

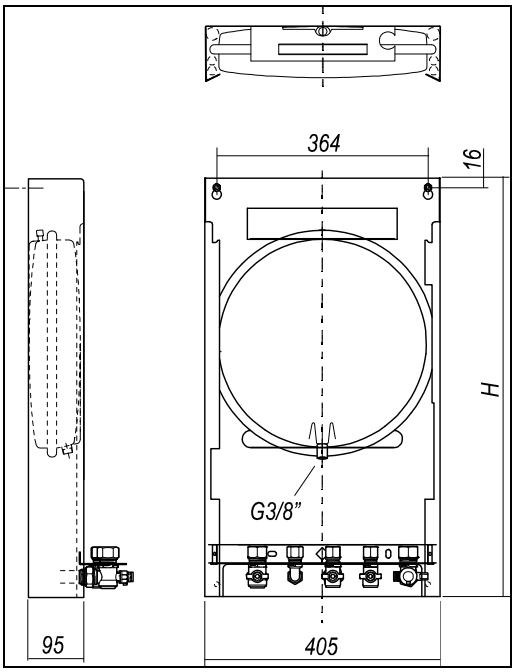

H =	840	Combi Compact HRE 36/30
H =	780	Combi Compact HRE 28/24
H =	720	Combi Compact HRE 24/18

CAUTION

Make sure that the boiler connections of the shut off valves remain in the correct position (= straight upwards). Do not over tighten connections. Do not turn tightened valves on pipes as this weakens joints within the boiler.

7.3.2 Using the fixing strip + ROBO kit.

- Position the fixing strip to the wall and drill the holes.
- Using apropriat fixing materials, secure the strip horizontaly to the wall. Make sure the wall is suitable for placing the boiler.
- Hang the boiler on the fixing strip and connect the ROBO kit to the boiler and installation.

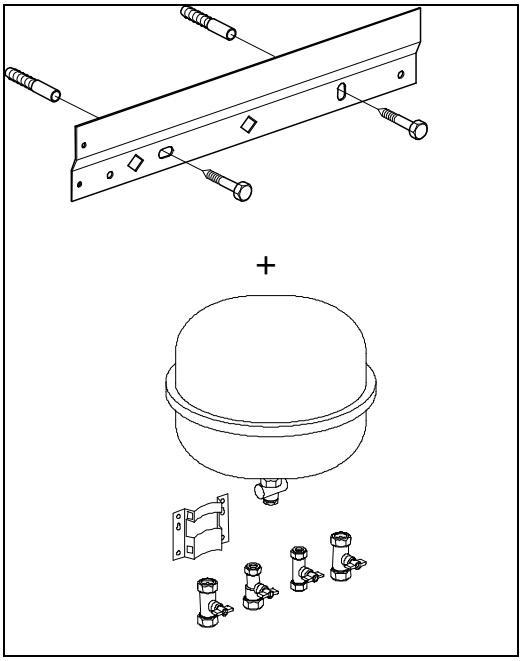

7.4 Installing the appliance

1. Unpack the appliance.
2. Check the contents of the packaging. It consists of:
   - Appliance (A)
   - Wall mounting strip (B)
   - Condensate trap (C)
   - Installation and operation instructions and warranty card
   - Templates for either wall or jig mounting
3. Check the appliance for possible damage: report damage immediately to the supplier.
4. Decide either to use the wall mounting strip (supplied) or wall mounting jig.
5. The templates show the positions for the horizontal flue. Drill the exit holes, being sure to prevent dust or debris from entering the boiler or pipe-work.
6. If the wall mounting strip is secured to the wall then slide the boiler down until latched.
7. If the jig is fixed securely to the wall then it is possible to fit the pipe connections prior to hanging the boiler. Pipe connections are (from right to left) as follows for both methods: PRV 15 mm – CH flow 22mm – DHW 15 mm – Gas 22 mm – Cold main 15 mm – Return 22 mm.
   IMPORTANT. The gas supply should be minimum 22mm up to gas isolation valve on boiler.
   It is the installers responsibility to ensure sufficient gas supply.
8. Check whether the compression rings are sitting squarely in the mounting bracket couplings.
9. Fit the appliance, sliding it downwards on the jig. Ensure at the same time that the pipes slide into the compression fittings.
10. Tighten the compression fittings on the mounting bracket. Do not turn tightened valves on pipes as this weakens joints within the boiler.
11. Fit the flexible tube to the condensate trap outlet.
12. Fill the condensate trap with water and slide it as far as possible upwards on to the condensate drain connector below the appliance.

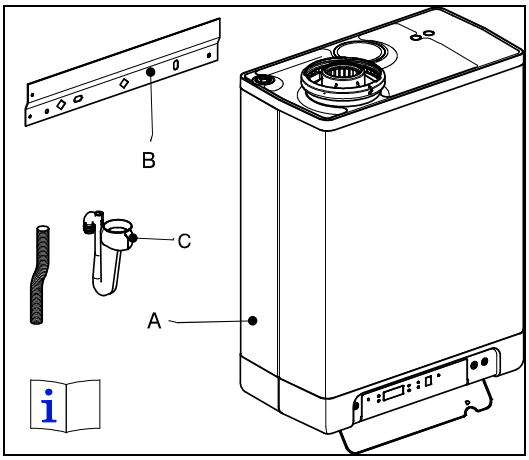

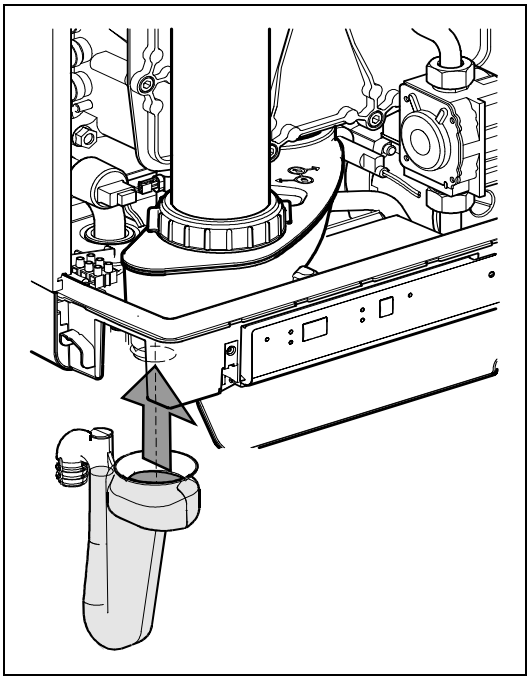

CAUTION

The Combi Compact HRE 36/40 is only to be installed with the condensate trap(length =235 mm) included in the boiler package.

When replacing the condensate trap make sure the correct version is ordered (art.nr. 844787). Using an incorrect condensate trap can lead to potentially unsafe situations.

13. Connect the flexible tube from the condensate trap to the drain via an open connection. The condensate discharge system must be made of plastic, no other materials may be used. The discharge duct must have a minimum gradient of 5 – 20 mm/m. Condensate discharge via the gutter is not allowed given the risk of frost and the possible damage to materials.
14. Fit the flue.

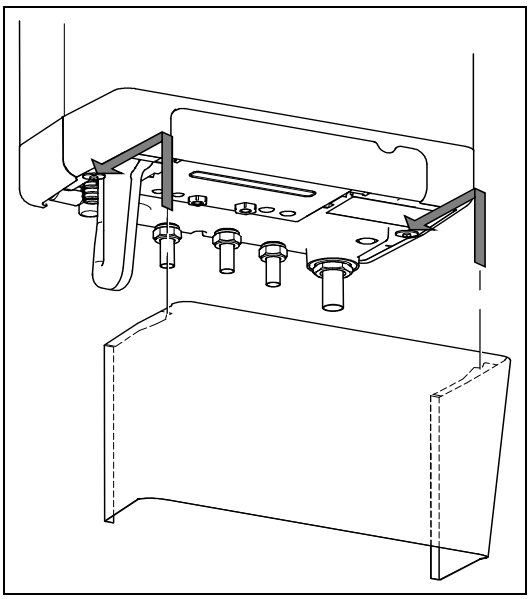

CAUTION

Always fill the condensate trap with water and place it on the boiler before powering up the boiler.

Not placing or filling up the condensate trap may cause flue gases to come into the installation room and can lead to dangerous situations!

In order to place the condensate trap the front cover must be pulled forward or removed entirely.

Note

It is recommended that any external condensate pipe is insulated and increased to 32mm diameter in order to prevent the condensate from freezing.

7.4.1 Fitting the cover plate (optional)

Hang the flanged upper edge of the cover plate on the washers under the base of the appliance and slide the cover plate as far as possible towards the rear.

8 CONNECTION

8.1 Connecting CH installation

1. Flush the CH system thoroughly (please refer to current Standard Codes of Practice).
2. Fit the flow and return pipes to the isolation valves.
3. All pipes must be fitted unstressed in order to prevent the pipes from ticking.
4. Existing connections must not be twisted, in order to avoid leakages.
   Make sure the compression fittings are thightened thoroughly to prevent leakage.

8.1.1 The CH system should be equipped with:

- A drain tap in the return pipe immediately below the appliance.
- A drain tap at the lowest point(s) of the installation.
- A non return valve, if pipes run upwards at a short distance from the appliance. This avoids the occurrence of thermosyphon effect during DHW operation mode.

8.1.2 Thermostatic radiator valves

If all radiators are equipped with thermostatic or radiator valves, an auto bypass must be fitted in order to guarantee minimum water circulation. The auto bypass must be as far as possible from the appliance in order to prevent overheating of the appliance.

8.1.3 Floor heating

For effective operation of the DHW supply any undesired circulation through the appliance as a result of a second pump in the CH circuit must be avoided.

Connect the floor heating system in a hydraulically neutral manner to the appliance, or equip the CH circuit with an electric shut-off valve or check valve to prevent flow through the appliance when there is no CH request for heat.

Connection diagram for floor heating

A. Boiler
B. Pump
C. Floor heating valve
D. Non return valve (spring operated)
E. Electrical valve 230 V AC
F. Radiators
G. Room thermostat
H. Maximum thermostat

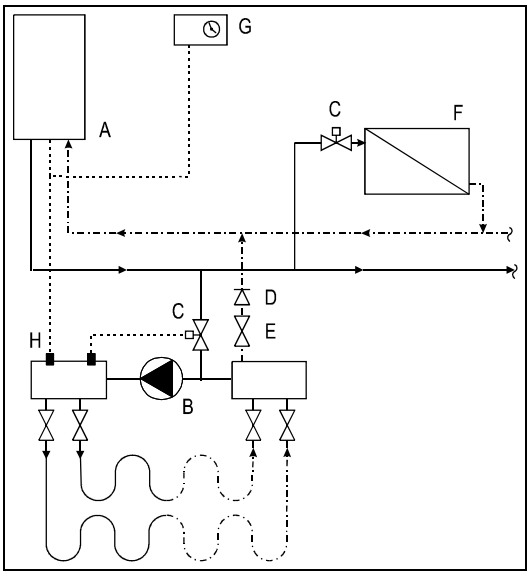

8.2 Connecting DHW installation

1. Flush the installation thoroughly to clean (please refer to current Standard Codes of Practice).
2. Fit the cold and hot water pipes into the shut off valve and the elbow.
3. Existing connections must not be twisted, in order to avoid leakages. Make sure the compression fittings are tightened thoroughly to prevent leakage.

8.2.1 Notes

- *If the appliance is only used for the provision of hot water, the heating function can be switched off by entering the service menu and change parameter 1. The CH installation does not then have to be connected or filled.*
- *If the appliance is taken out of operation during the winter and disconnected from the mains supply, the DHW water must be drained in order to prevent freezing. For this purpose the DHW connections below the appliance must be removed.*

8.2.2 Flow resistance graph for appliance DHW circuit

A = Combi Compact HRE 24/18 (*)
B = Combi Compact HRE 28/24
C = Combi Compact HRE 36/30 & Combi Compact HRE 36/40

X. Bar
Y. Litres per minute

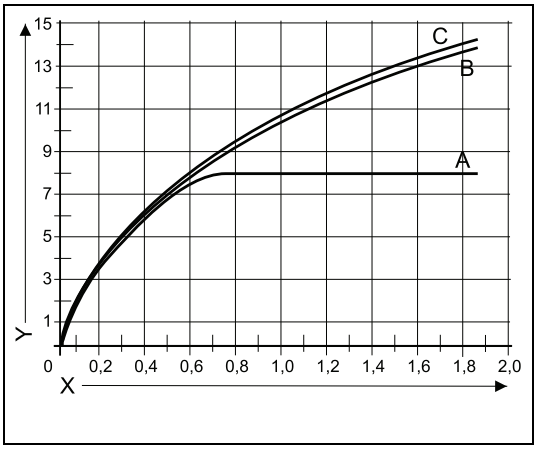

(*) The Combi Compact HRE 24/18 is equiped with a flow restrictor of 8 litres.
When a DHW flow above 8 liters is required this flow restrictor has te be removed.

8.2.3 Minimum mains water pressure

A minimum of 0,5 bar mains cold water pressure is needed to ensure that the DHW circuit of the Intergas HRE boiler is working correctly.

8.3 Electrical connection

CAUTION

A fused spur or an unswitched socket must be located no more than 1 metre from the appliance.

For installation in damp rooms a fixed connection is obligatory.

When working on the electrical circuit always isolate the electric supply.

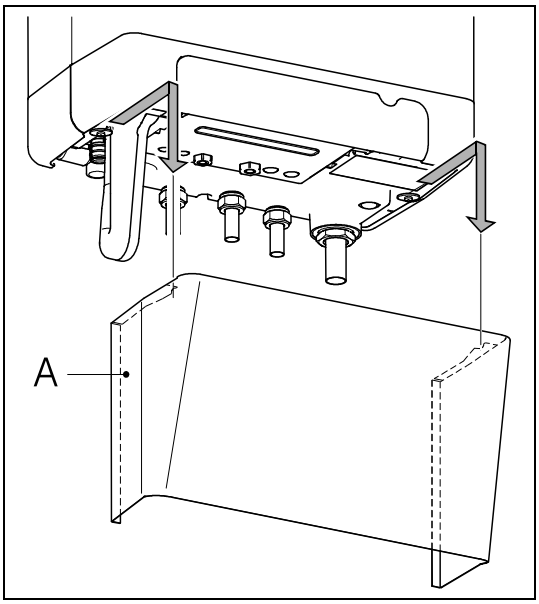

1. Slide the cover plate (A) (if present) to the front to remove.
2. Open the display cover and unscrew both screws to remove the front cover.
3. Pull the boiler controller unit forwards; the boiler controller will tip downwards to provide access.
4. Consult sections § 8.3.1 and chapter 13 for making the connections.
5. After making the desired connections plug the appliance into an earthed wall socket.

8.3.1 Electrical connections

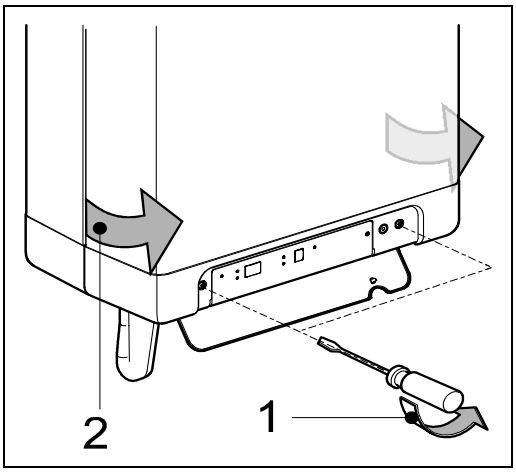

Temperature control	Connector X4	Notes
Room thermostat	6 – 7	Voltage free room thermostat. Remove link 6-7
Outside temperature sensor	8 – 9	-
Frost protection thermostat	6 – 7	Parallel to room thermostat
Power supply 24 V DC	6 – 7 – 9	6 = 24 V DC 7 = room thermostat 9 = 0 V DC
Open Therm (OT)	11 – 12	Remove link 6-7

Temperature control	Connector X2	Notes
Room thermostat 230 V or external control 230 V	1 – 3	Remove link 6 – 7 (connector X4)
Frost thermostat 230 V	1 – 3	Remove link 6 – 7 (connector X4)

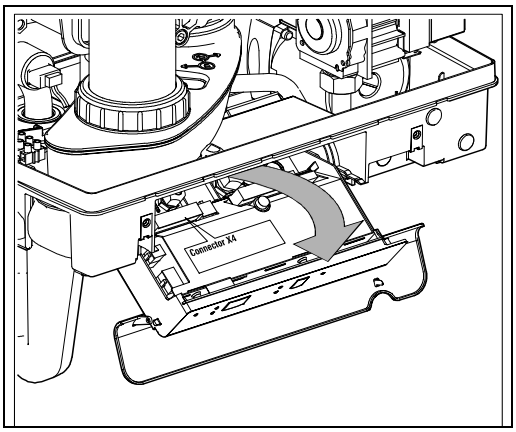

8.3.2 On / off room thermostat (low voltage)

To be connected to contacts 6 and 7 of connector X4.
This is a 24 volt connection and no mains power must be applied to these terminals.
See chapter 13, electrical diagram.

Note
When a 24 volt thermostat is connected to contacts 6 and 7, the loop in 6 – 7 must be removed

1. The on/off room thermostat has to be connected to the contacts 6 and 7 of connector X4.
2. Adjust the feedback resistance of the room thermostat to 0.1 A. In case of doubt measure the current and adjust this accordingly.
3. The allowed maximum electrical resistance of the room thermostat and wiring is 15 Ohm.

8.3.3 Timer - room thermostat

A 3VA-24Vdc power supply is available for a room thermostat. Connect the timer room thermostat according to § 8.3.1.

8.3.4 Open Therm room thermostat

Open therm is a protocol that enables the boiler and the room thermostat to communicate. Based on the information from the room thermostat the flow temperature of the boiler is adjusted to the most optimal value.

The Open Therm (OT) room thermostat has te be connected to the contacts 11 and 12 of connector X4 (see chapter 13, electrical diagram).

CAUTION
Connecting the Open Therm room thermostat to other contacts than 11 – 12 may damage the room thermostat !

NOTE
When an Open Therm thermostat is connected to contacts 11 and 12, the loop in 6 – 7 must be removed.

8.3.5 Outside temperature sensor

The appliance is equipped with a connection for an outside temperature sensor. The outside temperature sensor can be used in combination with an on/off room thermostat or an OpenTherm thermostat.

Connect the outside temperature sensor (See § 8.3.1).

For the heating line setting, see weather-dependent regulation (See § 10.6). The sensor should be fitted where possible on a north facing wall.

8.3.6 230 volt room thermostat

To be connected to contacts 1 and 3 of connector X2 and remove link 6-7.
See electrical diagram.

8.3.7 S and Y zone plans

Any combination of external controls for time /temperature and heating of external DHW cylinders or CH zones can be connected to the boiler.
All controls/ zones should be connected in an external wiring centre and a switched live connected to 1 on X2. Set in-built timer to C-ON.
Always remove link between 6-7 on X4 when fitting external temperature controls or the boiler will run constantly

Warning High Voltage
Isolate the appliance from the electrical supply before connecting the thermostat.

8.4 Condensate disposal

The appliance is provided with a 25 mm flexible pipe from its condensate trap. Connect the flexible tube from the condensate trap to the drain via an open connection.

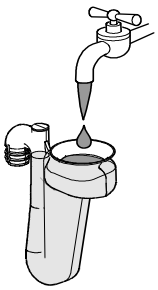

CAUTION

Always fill the condensate trap with water and place it on the boiler before powering up the boiler.

Not placing or filling up the condensate trap may cause flue gases to come into the installation room and can lead to dangerous situations!

In order to place the condensate trap the front cover must be pulled forward or removed entirely.

The condensate discharge system, pipework and fittings must be made of plastic. No other materials may be used. The discharge duct must have a gradient of 5 – 20 mm/m throughout its length. Condensate discharge via the gutter is not allowed given the risk of frost and the possible damage to materials

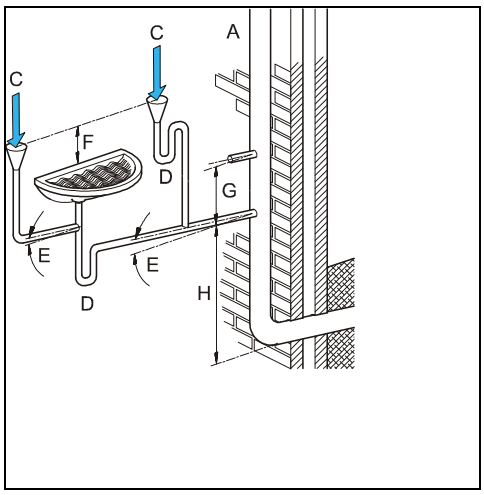

A. Internal stack pipe (see diagram)
B. Gully
C. Condensate discharge from boiler
D. Servicable waste trap
E. 5 – 20 mm/meter
F. > 100 mm
G. > 110 mm
H. > 450 mm

If an externally-run condensate drainage pipe is used the following measures should be adopted to prevent freezing:

- the pipe should be run internally as far as possible before going externally, the pipe diameter should be increased to a minimum of 30mm ID (typically 32mm OD) before it passes though the wall;

- the external run should be kept as short as possible, taking the most vertical route possible to the discharge point, with no horizontal sections in which condensate might collect;

- the external pipe should be insulated using suitable waterproof and weatherproof insulation (''Class O'' pipe insulation is suitable for this purpose);

- the use of fittings, elbows etc should be kept to a minimum ans any internal ''burrs'' on cut pipework should be removed so that the internal pipe section is as smoooth as possible.

For more information about preventive measures against freezing please visit the HHIC website http://www.centralheating.co.uk/checklists/frozen-condensate-pipes.

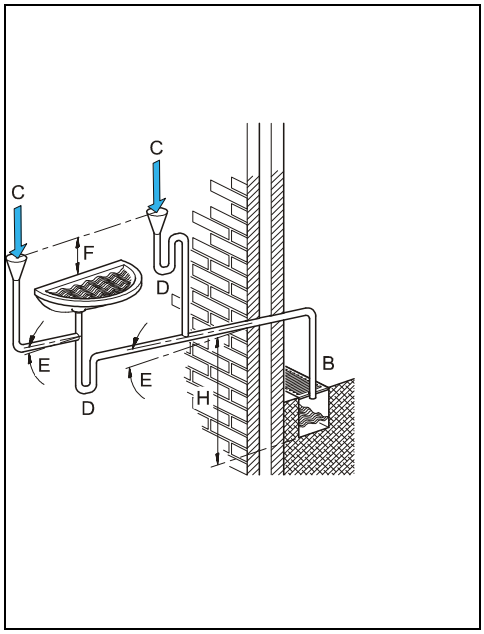

8.5 Flue system

8.5.1 Flue pipe and air supply

The boiler utilises a special concentric flue adapter which can only be used with the elbow that is part of the horizontal or vertical flue pipes. For the appropriate types see chapter 6 Accessories.

Note

Only use approved Intergas flue products with this boiler, which can be sourced from the supplier of your boiler or Intergas stockist.

The standard horizontal flue pipe is not supplied with the boiler and should be purchased separately from your supplier. This flue may be routed to the rear, left or right of the appliance by means of the 90^0 degree bend, which is supplied in the flue kit.

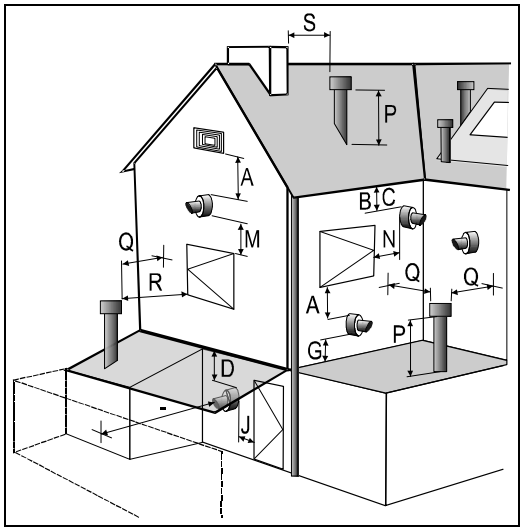

8.5.2 Flue pipe position

	Terminal Position	Min. distance
A	Directly below an open able window or other opening e.g. air brick	300 mm
B	Below gutters, soil pipes or drain pipes	75 mm
C	Below eaves	200 mm
D	Below balconies or car front roofs	200 mm
E	From vertical drain pipes and soil pip	150 mm
F	From internal or external corners	300 mm
G	Above ground, roof or balcony level	300 mm
H	From a surface facing a terminal	600 mm
I	From a terminal discharging towards another terminal	1200 mm
J	From an opening in a car port (e.g. door, window) into a dwelling	1200 mm
K	Vertically from a terminal on the same wall	1500 mm
L	Horizontally from a terminal on the same wall	300 mm
M	Above an opening, air brick, opening windows, etc.	300 mm
N	Horizontally to an opening, air brick, opening windows, etc.	300 mm
P	Above roof level (to base of terminal)	300 mm
Q	From adjacent wall to flue	300 mm
R	From an adjacent opening window	1000 mm
S	From another roof terminal	600 mm
-	From an external boundary. Note: if the terminal is facing a boundary it is recommended that an anti-plume kit be fitted.	600 mm
T T1 T2	Terminals adjacent to windows or openings on pitched and flat roofs: The flue should not penetrate this area.	 2000 mm 600 mm

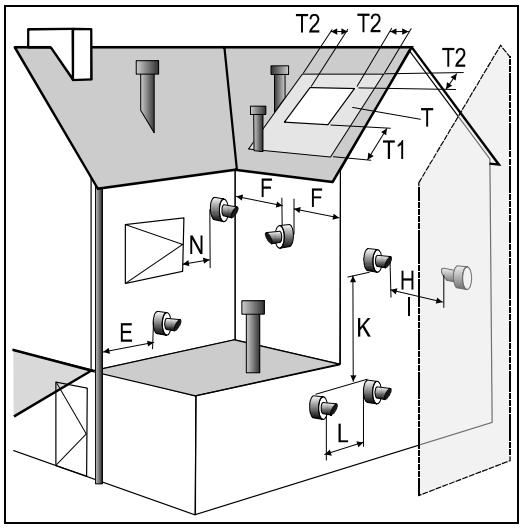

Note

Intergas cannot be held responsible for atmospheric conditions when siting flue terminals

CAUTION

Once the flue has been installed and the appliance commissioned, installer should observe the plume direction. Particular attention should be drawn to plume vapour re-entering the boiler via the air intake. If this occurs, it is highly possible the flue is fitted within a negative pressure area and therefore a plume management kit (PMK) must be fitted.

8.5.3 Length flue pipe and air inlet

The following lengths (L = meters) for the combustion system are valid:

HRE 24/18

C13(1)	C33(2)	C13(1)	C33(2)	C53(3)		C33(4)	
60/100	60/100	Twin-80	Twin-80	60/100	60	60/100	80
L	L	L	L	L1	L2	L1	L2
10.2	11	37.6	37.6	7	1	9	1
				1	12	1	33.7

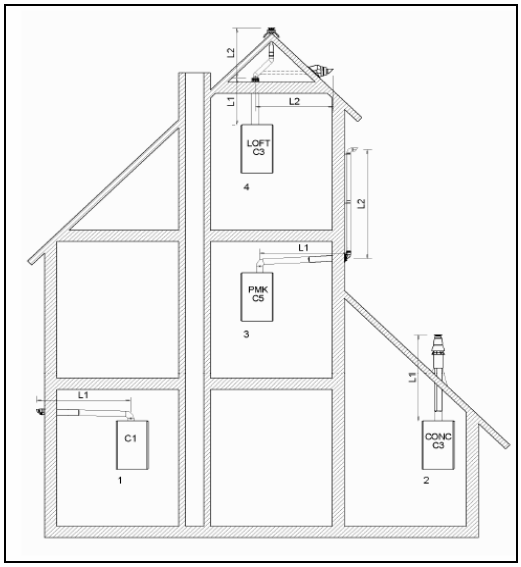

HRE 28/24

C13(1)	C33(2)	C13(1)	C33(2)	C53(3)		C33(4)	
60/100	60/100	Twin-80	Twin-80	60/100	60	60/100	80
L	L	L	L	L1	L2	L1	L2
9.7	10	29.8	29.8	6.5	1	9	1
				1	10	1	31.2

HRE 36/30 & HRE 36/40

C13(1)	C33(2)	C13(1)	C33(2)	C53(3)		C33(4)	
60/100	60/100	Twin-80	Twin-80	60/100	60	60/100	80
L	L	L	L	L1	L2	L1	L2
9.7	10	21.3	21.3	6	1	9	1
				1	10	1	30

8.5.4 Horizontal flue system

The 60/100 mm horizontal flue system may be extended up to a maximum length as mentioned in the table above. For every bend used the following flue length reductions apply:
- 45° bend = 1 metre and for a 90° bend this is 1.5 metres.

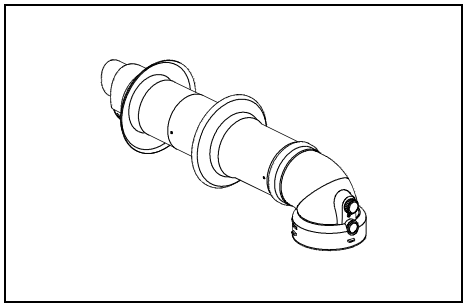

CAUTION

Only an Intergas approved flue is to be used with this product.

Failure to comply with this requirement will invalidate your guarantee and may lead to a dangerous situation!

The horizontal flue must be installed under a 3° fall towards the boiler (50 mm per metre) and must be supported with a minimum of 1 bracket at each meter length. Best recommended position of the bracket is just before the joint.

8.5.5 Vertical flue system

A vertical 60/100 mm flue kit is also available, which can be extended up to a maximum of 10 metres, excluding the initial boiler connection, using additional components available from the supplier of your boiler or Intergas stockist.

The vertical flue system contains a flue adapter concentric 60/100 to replace the standard adapter on the boiler.

Please note that the terminal is suitable for a flat or pitched roof and only approved Intergas flue products can be used with this boiler.

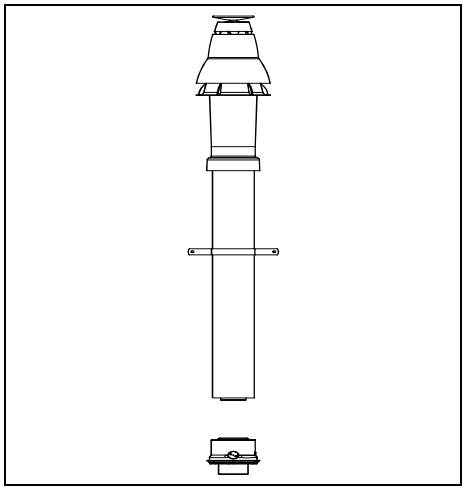

8.5.6 Plume management kit

The plume management kit comprises of a 710 mm horizontal section with elbow to connect the 1m vertical condensing tube, which has a horizontal or vertical terminal dependant on your requirements. The maximum length of horizontal flue including the terminal but excluding the initial elbow from the boiler and 1 metre vertical condensing tube is 7 metre.

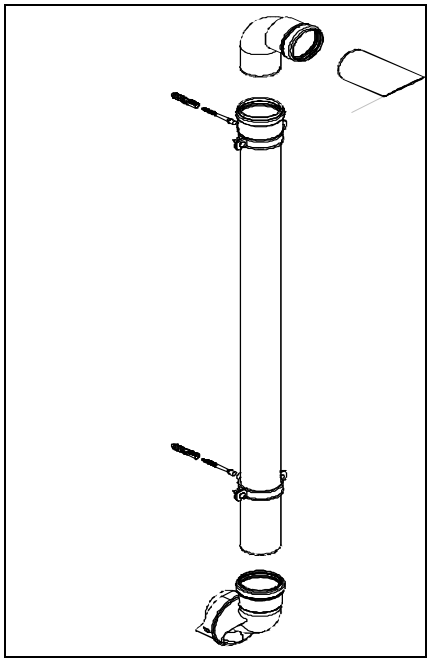

Note

For each additional 90º elbow used the maximum flue length must be reduced by 1.5 metre, whilst the use of 2 x 45º bends warrants a reduction of 2 metre.

The horizontal part of the flue must be installed under a 3° fall towards the boiler (50 mm per metre) and must be supported with a minimum of 1 bracket at each meter length. Best recommended position of the bracket is just before the joint.

CAUTION

- **Sealing rings should only be moisturized with water before use. Do not use soap or other detergents.**
- **When installing flues in voids make sure they are connected and fixed correctly. If in an existing situation a visual inspection is not possible the boiler must not be commissioned and remain disconnected from the gas supply untill suitable access has been realised.**
- **Make sure to follow the manufacturer's instructions regarding maximum length of the flue system, the appropriate flue material, correct jointing methods and the maximum distance between flue support.**
- **Ensure that all joints and seams are gastight and watertight.**
- **Ensure the flue system has a uniform gradient back to the boiler.**

8.5.7 Flues in voids

The flue system must be connected in accordance with the manufacturers instructions BEFORE firing the boiler.
The term void includes ceiling voids, floor voids, purpose built enclosures ,service risers, roof spaces or any other enclosure that will restrict access to inspect the flue.
To allow visual inspection, without reliance on devices such as endoscopes, cameras and mirrors, inspection hatches must be provided along the entire length of the flue.
Hatches must be a minimum of 300mm x 300mm and positioned with the edge of the inspection hatch to 1.5m of any joint and at changes of direction. Bends should be viewable from both directions where the inspection hatch cannot be positioned at the bend.
Where suitable access is not provided the appliance MUST NOT be commissioned and must be disconnected from the gas supply.
Additionally the entire flue and all flue seals must be installed in accordance with the requirements of BS5440:
1. Check condensate trap is filled with water and correctly connected to boiler.
2. All flue joints are correctly made, unstressed and adequately supported.
3. All parts of the flue can be visually inspected -ensure suitable access where flue is positioned within voids-

9 COMMISSIONING THE APPLIANCE

At the time of commissioning, complete all relevant sections of the Benchmark Checklist located in section 17 of this document.

9.1 Filling and venting the appliance and the installation

9.1.1 CH system

CAUTION

When an additive is added to the CH water, ensure it is suitable for the materials used in the appliance, such as copper, brass, stainless steel, steel, plastic and rubber.

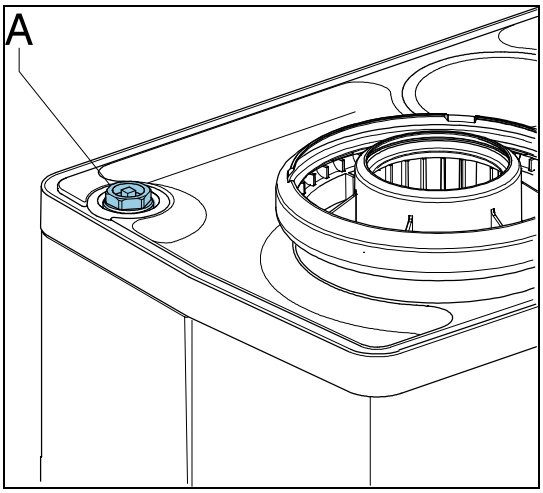

1. Connect to 3 amp fused spur.
2. Connect the appliance to mains.
   The appliance may perform a self test: 2 (on service display).
   The appliance will then go into wait mode: - (on service display).
3. Connect the filling loop and fill the installation with clean drinking water to a maximum pressure of 1-2 bar in the case of a cold installation (Indicated on the temperature 🌡 display.)
4. Bleed the appliance with the manual bleed screw (A).
5. Bleed the air in the installation with the manual bleed screws on the radiators.
6. Top up the CH installation if the pressure has dropped too far as a result of the air bleeding.
7. Check all couplings for leakage.
8. Fill the condensate trap with water.

9.1.2 Hot water supply

1. Open the main tap to pressurise the hot water section.
2. Vent the exchanger and the pipe system by opening a hot water tap.
3. Leave the tap open until all air has disappeared from the system.
4. Check all connections for leaks including internal connections.

9.1.3 Gas supply

1. Gas supply purged of air via test point D on gas valve (see illustration)
2. Connect a suitable gauge to test point D .
   Static or standing pressure must be 20mb.
   If 20mb is not obtained DO NOT proceed with commissioning until supply is rectified.
3. If static pressure is correct fire the boiler and allow to reach working temperature.
4. Test working pressure by selecting test program “H”. See section 10.8, High Setting. Working pressure must be 20mb +or- 1mb
   If working pressure is less than 19mb appliance heat output will be reduced and correct combustion readings may not be obtained. Do not adjust the air/gas ratio. Correct gas supply to obtain sufficient working pressure.

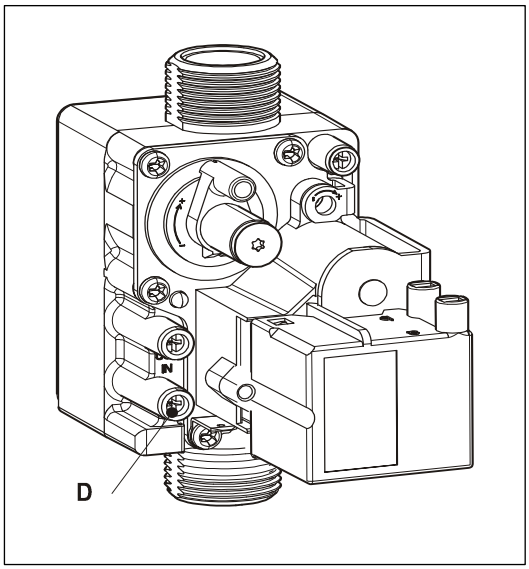

NOTE

The inlet working pressure must be obtained with all other gas appliances at the property working.

9.1.4 Combustion

The combustion for this appliance has been checked, adjusted and preset at the factory for operation on the gas type defined on the appliance data plate. Do not adjust the air/gas ratio valve. Having checked:

- That the boiler has been installed in accordance with these instructions;
- The integrity of the flue system and the flue seal, as described in § 8.5 and the British Standards codes of practices, specifically BS 5440;
- The integrity of the boiler combustion circuit and the relevant seals, as descibed in § 12.3 eg with a flue spillage mirror;

  proceed to put the boiler into operation as follows:

1. Set up the boiler to operate at maximum rate as described in § 10.7
2. With the boiler operating in the maximum rate condition check that the CO_2 value measuered at sampling point (X) complies with the requirements as described in the table under § 10.8

   Ensure that this inlet pressure can be obtained with all other gas appliances in the property working.

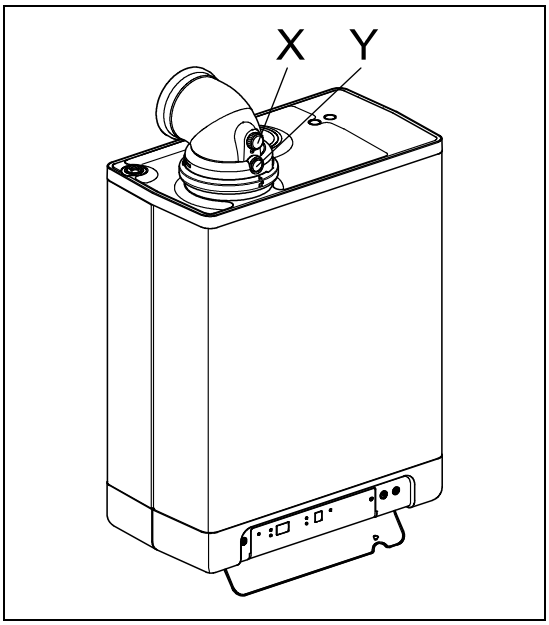

9.1.5 Flue system

The flue system must be connected correctly to the appliance in accordance with the manufacturer's instructions. The flue termination should also be checked. Where suitable access for a visual inspection of an existing flue system has not been provided the appliance must not be commissioned and it must be disconnected from the gas supply.

9.2 Commissioning the appliance

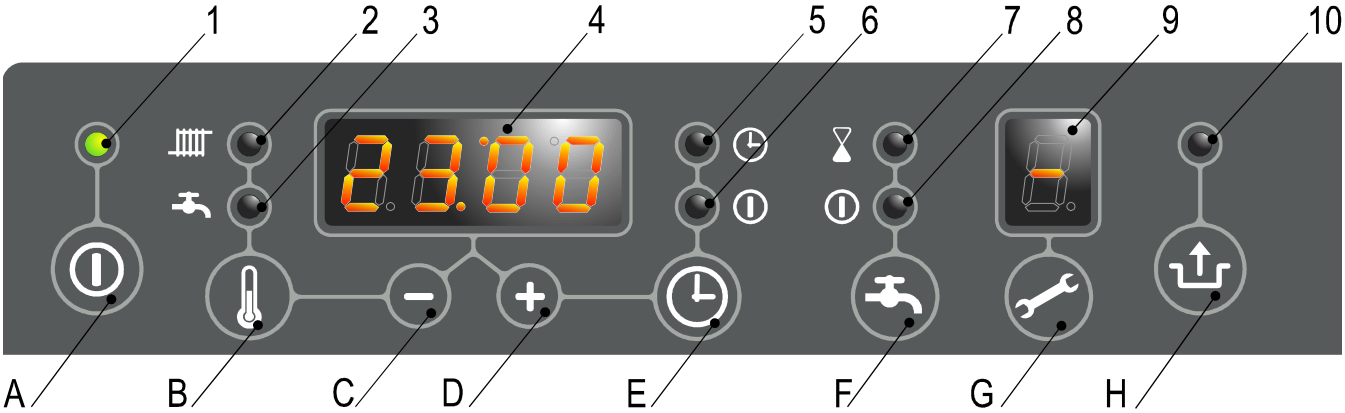

	Read-out
1	On / off
2	CH operation or setting maximum CH temperature
3	DHW operation or setting DHW temperature
4	Desired temperature of CH or DHW in °C / Ch water pressure (bar) / Fault code/ Time
5	Clock "on" CH enabled
6	Clock "off" CH disabled
7	DHW comfort function eco
8	DHW comfort function on (continuous)
9	Operating code
10	Flashes to indicate fault

	Operation
A	On / Off button
B	DHW / CH button, for setting desired temperature
C	- button
D	+ button
E	Clock function setting
F	DHW comfort function off / eco / on
G	Service button
H	Reset button

Once the preceding actions have been carried out, the appliance may be started up.

1. Press the button , to start the appliance.
   The heat exchanger is heated up and the service display will show 3, 4 and 8 (depending on the status of the DHW disabling switch and/or Open Therm regulation).
2. Adjust the pump setting depending on the maximum power set and the resistance in the CH installation. For the water head of the pump and the pressure loss of the appliance see § 10.5.
3. Set the room thermostat higher than the room temperature. The appliance will now switch to CH operation: 5 will show on the display.
4. Heat the installation and the appliance to approximately 80°C.
5. Check the temperature difference between the supply and return for the appliance and the radiators. This must be approximately 20°C. For this purpose set the maximum power on the service panel. See setting maximum power. If necessary adjust the pump setting and/or the radiator valves. For the minimum flow see § 10.5.
6. Switch the appliance off.
7. Bleed the appliance and the installation after cooling (if necessary top up).
8. Check correct operation of the heating and hot water supply.
9. Instruct the user on filling, bleeding and the operation of the clock, heating and hot water supply. For setting the clock see § 9.3.

Notes

- *The appliance is equipped with an electronic boiler controller, which ignites the burner and continuously monitors the flame during each request for heat from the heating or from the hot water supply.*
- *The circulation pump starts running in response to every request for heat. The pump continues running for 1 minute after heating. This post purge period can be changed if desired (See § 10.3).*
- *The pump runs automatically for 10 seconds every 24 hours in order to prevent seizing. This will occur at the the time of the last request for heat. To change this time the room thermostat should be turned up briefly at the desired time.*
- *The pump does not run during DHW operation.*

9.3 Setting and adjusting the clock functions

9.3.1 Setting the clock

- Press the ◷ button for less than 1 second and repeat this untill "24hr clock" appears. For adjusting the clock to the correct time press the **[+]** or **[-]** button.
  Note: Holding the button for more than 1 second will make the clock run fast.

9.3.2 Setting the timer function

- On pressing the ◷ button for more than 2 seconds the clock display will flash.
- The time for each on/off shows in the clock display and the service display shows which on 1 and 3 OR off 2 and 4 time is being set.
- Pressing the ◷ button again will change between the different on/off switching periods.
  The pre-set times are as follows:
  Display : [06:00] and [1] → Start first period CH on.
  [09:00] and [2] → End first period CH off.
  [16:00] and [3] → Start second period CH on.
  [22:00] and [4] → End second period CH off.
- By pressing the ⇧ button the new times will be stored in the boiler controller.
  In the service display [P] appears.
- When the clock is in period [1] or [3] (CH ON) the clock symbol LED is on.
- When the clock is in period [2] or [4] (CH not active) the ⓘ LED is on.
- By pressing the ◷ button over 5 seconds the default setting for the switch moments will be restored.
  In the service display "F-set" appears.
- By pressing the ⓘ button the boiler controller will return to the normal situation without storing any changes.

9.4 Additional functions

- Pressing the ◷ button for less than 1 second the following additional functions can be activated:
  - t-on (temporary on).
  The boiler will respond on every CH demand from the room thermostat until the next switch moment.
  - c-on (continuous on).
  The boiler will respond on every CH demand from the room thermostat without any time limit.
  - OFF
  The boiler will not respond on any CH demand from the room thermostat.

9.5 Shutting down

CAUTION

Drain the appliance and the installation if mains power has been interrupted and there is a possibility of freezing.

1. Drain the appliance at the drain tap.
2. Drain the installation at the lowest point.
3. Close the main cock for the water supply to the DHW section.
4. Drain the appliance by removing the DHW couplings below the appliance.

9.5.1 Frost protection

- To avoid freezing of the condensate drain pipe the appliance must be installed in a frost-free area.
- To avoid freezing of the appliance it is equipped with frost protection. If the temperature of the heat exchanger becomes too low, the burner switches on until the temperature of the heat exchanger is sufficient. If there is a possibility of the installation (or part of it) freezing, an (external) frost thermostat must be installed at the coldest point of the return pipe. This must be connected in accordance with the wiring diagram (See chapter 13).

Note

If an (external) frost thermostat has been fittted to the installation and connected to the appliance, this will not be active when the appliance is switched off at the operating panel (- on service display).

10 SETTING AND ADJUSTMENT

The functioning of the appliance is determined primarily by the (parameter) settings in the boiler controller. Part of this can be set directly via the operating panel; another part can only be adjusted using the installer code.

10.1 Directly via the operating panel

The following functions can be operated directly:

10.1.1 Appliance on/off

The appliance is started using the ⏻ key.

When the appliance is in operation the green LED above the ⏻ key will light up. When the appliance is off a single dash lights up on the service display (-) to indicate that supply voltage is present. In this mode the pressure in the CH installation (in bar) can also be read on the main display.

10.1.2 DHW comfort

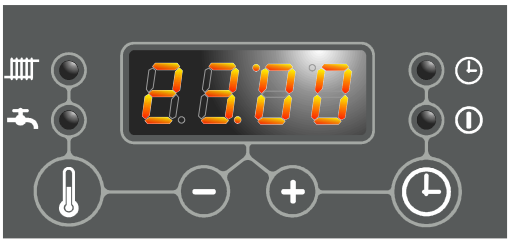

The 'DHW comfort function' can be operated with the DHW comfort key and has the following settings:

- **On:** *(⏻ LED on)* The appliance's DHW comfort function is switched on continuously. In this mode the heat exchanger will be kept on temperature to assure instant delivery of hot water.
- **Eco:** *(⌛LED on)* The appliance's DHW comfort function is self-learning. The appliance will adapt to the pattern of use of hot tap water. As a result, the temperature of the heat exchanger will not be maintained during the night or in the case of long absence.
- **Off:** *(Both LEDs off)* The temperature of the heat exchanger is not maintained, as a result of which the delivery of hot tap water takes a little time. If there is no need for hot tap water or its immediate delivery, the DHW comfort function can be switched off.

10.1.3 Resetting

When a lock-out is indicated by means of a flashing LED above the key and a code on the main display, the appliance can be restarted by pressing the key. Check the nature of the fault on the basis of the fault codes in § 11.1 and resolve the cause of the fault if possible before resetting the appliance.

10.1.4 Changing the settings of the various functions:

Holding the key pressed in for 2 seconds takes you to the user settings menu(LED at and the figure display start to flash). Pressing the key repeatedly results in a different function LED flashing each time. When the LED is flashing the indicated function can be set with the + and − key . The value set is shown on the display.

The ⏻ on/off key closes the settings menu without storing the changes.

The reset key closes the settings menu and the changes are stored.

If no key is pressed during a period of 30 seconds, the settings menu is closed automatically and the changes are stored.

10.1.5 Maximum CH supply temperature

Press the key until the LED at starts to flash.

With the + and − key s set the temperature between 30°C and 90°C (default value 80°C).

10.1.6 DHW temperature

Press the key until the LED at starts to flash.

With the + and − keys set the temperature between 40°C and 65°C (default value 55°C).

10.2 Setting via the service code

The boiler controller in the appliance is factory set in accordance with the parameters.

These parameters can only be changed using the service code. Proceed as follows to activate the program memory:

1. Press the 🔧 and ⇧ keys simultaneously until a [0] appears on the service- and main display.
2. Using the + and − keys set [15] (service code) on the main display.
3. Using the 🔧 key set the parameter to be set on the service display.
4. Using the + and − keys set the parameter to the desired value (visible) on the main display.
5. Once all desired changes have been entered, press the ⇧ key until a [P] appears on the service display.

The boiler controller has now been reprogrammed.

- Pressing the ⓘ key in takes you out of the menu without storing the parameter changes.
- By pressing the 🔧 button over 5 seconds the default setting for the parameters will be restored. In the display "F-set" appears.

10.3 Parameters

Setting	Combi Compact HRE Factory settings 24/18	28/24	36/30	36/40	Description	Par.
Service code **[15]**	-	-	-	-	Access to installer settings The service code must be entered (= 15)	0
Installation type	0	0	0	0	0= Combi 1= Heating only + external DHW tank 2= DHW only (no heating system required) 3= Heating only	1
CH pump continuous	0	0	0	0	0= post purge period only 1= pump continuously active 2= pump continuously active with MIT switch 3= pump on with external switch	2
Maximum CH power set	70	70	70	99	Adjustment range of set value parameter c up to 85% or up to 99 (HRE 36/40 only)	3
Maximum DHW power set	99	99	99	75	Adjustment range of set value parameter d up to 99% or 75 % (HRE 36/40 only)	4
Min. supply temperature of the heat curve	25	25	25	25	Adjustment range 10°C to 25°C	5
Min. outside temperature of the heat curve	-7	-7	-7	-7	Adjustment range -9°C to 10°C	6
Max. outside temperature of the heat curve	25	25	25	25	Adjustment range 15°C to 30°C	7
CH pump post purge period	1	1	1	1	Adjustment range 0 to 15 minutes	8
CH pump post purge period after DHW operation	1	1	1	1	Adjustment range 0 to 15 minutes (N.a. for Combi Compact appliance)	9
Booster	0	0	0	0	N.a.	B
Step modulation	1	1	1	1	0= step modulation off during CH operation 1= step modulation on during CH operation	C
Minimal CH rpm	30	30	30	20	Adjustment range 25 to 50 % (40 = propane)	c
Minimal DHW rpm	30	30	30	20	Adjustment range 25 to 50% (40= propane)	d
Min. Supply temperature during OT demand (OT= OpenTherm thermostat)	40	40	40	40	Adjustment range 10°C to 60°C	E
OT response	1	1	1	1	0= ignore OT if < E 1= limit OT if < E 2= OT on-off	E.
Start rpm CH	70	70	70	50	Adjustment range 50 to 99% of the set maximum rpm	F
Start rpm DHW	70	70	70	50	Adjustment range 50 to 99% of the set maximum rpm	F.
Max. fan rpm (factory setting)	45	44	48	65	Adjustment range: nominal value ± 200 rpm. With this parameter the maximum rpm can be set	H
Set point CH (flow temperature) during heating external DHW tank	85	85	85	85	Adjustment range 60°C to 90°C	n
Waiting time after a DHW demand before a CH demand is answered	0	0	0	5	Adjustment range 0 to 15 minutes	o

10.4 Setting maximum CH power

The maximum CH power is set at 70% in the factory. If more or less power is necessary for the CH installation, the maximum CH power can be changed by changing the fan rpm. See table Setting CH power.

This table shows the relationship between the fan rpm and the appliance power.

Setting CH power

Desired CH power (in kW approx.)				**Setting on service display** (in % of max. rpm)
24/18	**28/24**	**36/30**	**36/40**	
-	-	-	40,9	99
17,8	22,8	26.3	34,8	± 83
14,8	19,1	22,6	28,5	70
12,7	16.4	19,0	24,5	60
10,6	13,7	15,8	20,5	50
8,3	11,0	12,7	16,4	40
6,4	8,3	8,5	12,3	30
5,4	6,9	7,1	10,2	25
-	-	-	7.8	20

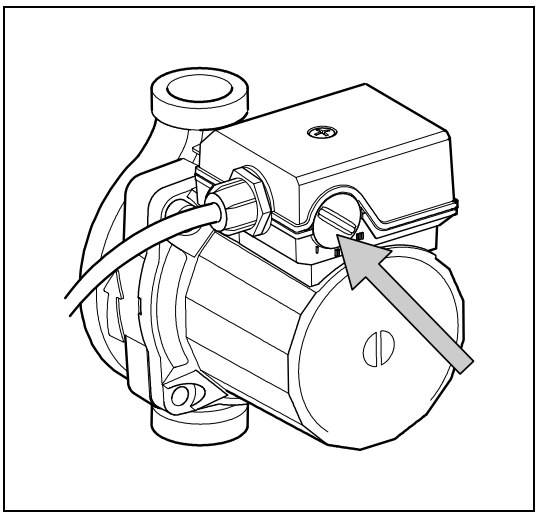

Note

The power during burning is increased slowly and is reduced as soon as the set supply temperature is reached (modulate on T flow).

10.5 Adjusting pump setting

The switch for adjusting the pump setting is located on the CH pump connection box (Factory setting III).

1. Adjust the pump setting depending on the maximum power set and the water resistance of the installation. See diagram: pressure loss of appliance and pump water head, positions I, II and III.
2. Check the temperature difference between the appliance supply and return: this must be approximately 20°C.

The minimum flow quantity (l/h)	**Power setting (kW)**
155	5,4
510	17,8
650	22,8
750	26,3
1150	40,9

WILO RS 15/4.1

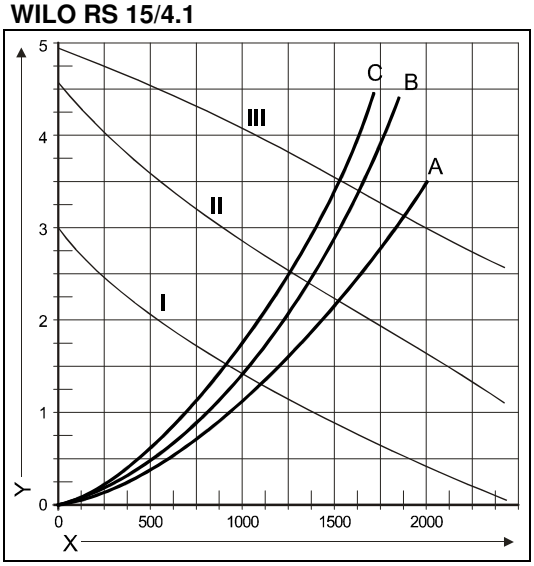

Appliance pressure loss graph, CH side

A. Combi Compact HRE 24/18
B. Combi Compact HRE 28/24
C. Combi Compact HRE 36/30
AA. Combi Compact HRE 36/40

I Pump setting I
II Pump setting II
III Pump setting III
X Flow in l/h
Y Pressure loss / water head in mH_2O

WILO RS 15/7-3

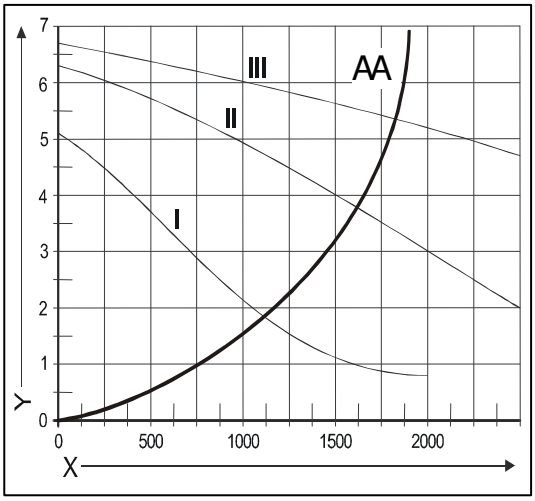

10.6 Weather– compensation adjustment

When an external sensor is connected the supply temperature is adjusted automatically depending on the outside temperature, in accordance with the heating line set. The maximum supply temperature (Tmax) is set via the main display. If desired, the heating line can be changed in the parameter list. See § 10.3.

Heating line graph

X. Outside T in °C

Y. Supply T in °C

A. Factory setting

(Tmax CH = 80°C, Tmin CH = 25°C, Tmin out = -7°C, Tmax out = 25°C)

B. Example

(Tmax CH = 60°C, Tmin CH = 25°C, Tmin out= -7°C, Tmax out = 25°C)

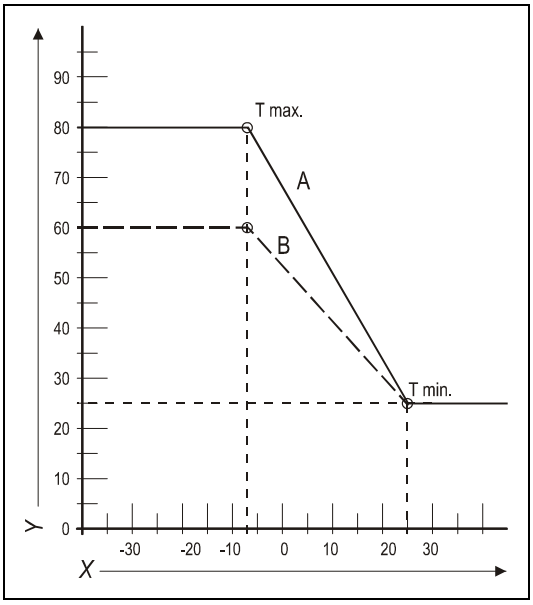

10.7 Checking CO_2 setting

The CO_2 setting has been set in the factory and in principle requires no adjustments.

The setting can be checked by measuring the CO_2 percentage in the combustion gases (X).

In the case of possible disturbance of the adjustment, replacement of the gas valve or conversion to another gas type the adjustment must be checked and if necessary set as follows.

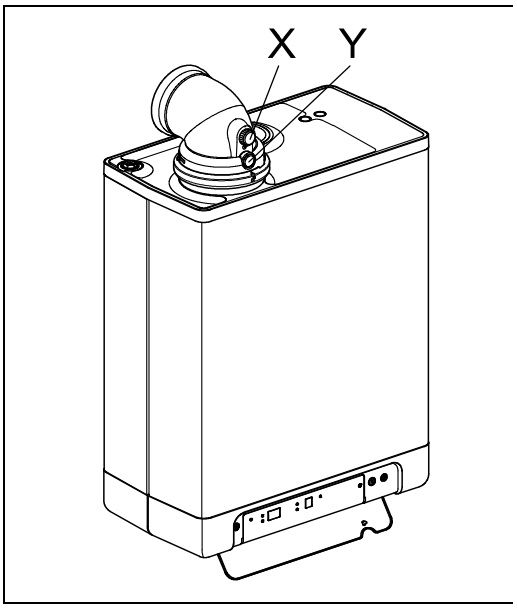

1. Switch the appliance off with the (on/off symbol) button .[-] will appear in service display.
2. Remove appliance front panel.
3. Remove sampling point X to insert suitable flue gas analyzer probe .
4. Switch appliance on with (on/off symbol)button and create a CH demand
   Test program H = HIGH SETTING:
5. Select High setting by simultaneously pressing (spanner symbol) and [+] buttons twice. H appears in service display . (DO NOT TEST with h in service display- press (spanner symbol) and [+] again.)
6. Allow readings to stabilize and check the CO_2 percentage is as listed in the table under § 10.8
7. Record the CO_2 percentage.
   Test program L = LOW SETTING:
8. Select Low setting by simultaneously pressing (spanner symbol) and [-] once. L appears in service display.
9. Allow readings to stabilize and check the CO_2 percentage is as listed in the table under § 10.8
10. Record the CO_2 percentage.
11. Switch off appliance with (on/off symbol) and replace sample point cap X. Replace front cover.

CAUTION

Check that the Flue sampling point X is gas tight after sampling.

CAUTION

It is not possible to adjust the CO_2 percentage on test program H. When the CO_2 percentage is not in accordance with the value as listed in the table under § 10.8
Please contact Intergas Technical Services 01527 888 000.
No adjustment to the CO_2 percentage should be made without permission from Intergas Technical Services.

CAUTION

Work on gas carrying parts may only be carried out by a qualified competent person.

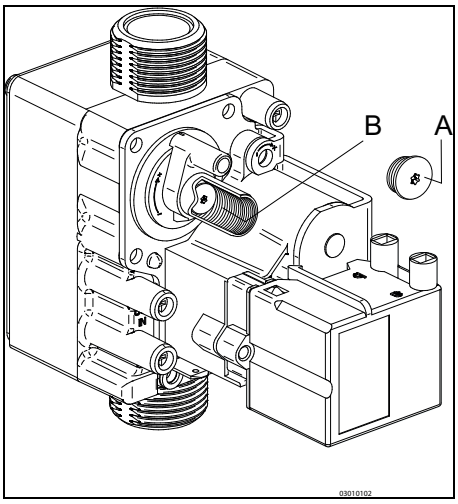

A. Cover screw
B. Adjusting screw for low position

10.8 Setting gas/air adjustment procedure

1. Switch the appliance off with the on/off key (- on service display).
2. Remove the front panel from the appliance.
3. Unscrew the CO_2 measuring nipple (X) and connect the measuring hose.
4. Switch the appliance on with the on/off key.

High setting:

5. Adjust the appliance to the highest power by simultaneously pressing the keys 🔧 and + on the operating panel until an H appears on the display.
6. Check if the CO_2 percentage is in accordance with the value mentioned in the table below.

CAUTION

It is not possible to adjust the CO_2 percentage at high setting. When the CO_2 percentage at high setting is not within the prescribed tolerance band please contact Intergas Heating.

7. Note the measured CO_2 percentage.

Low setting:

8 Adjust the appliance to the lowest power by simultaneously pressing the keys 🔧 and − on the operating panel until an L appears on the display.
9 Measure the CO_2 percentage.. If the CO_2 percentage. does not correspond with the value in the table below proceed with setting as follows:
10 Remove the cover cap (A).
11 Adjust the set screw (B) to the correct CO_2 value (clockwise higher and anti-clockwise lower).
12 After measurement and setting replace the cover cap (A) and close the CO_2 measurement nipple.
13 Adjust the appliance to the maximum power by simultaneously pressing the keys 🔧 and +(2 x) on the operating panel until an H appears on the display.
14 Measure the CO_2 percentage.. If the CO_2 percentage. does not correspond with the value in the table below please contact the manufacturer.
15 Press simultaneously on the + and − keys to leave the test program.
16 Fit the front panel to the appliance.

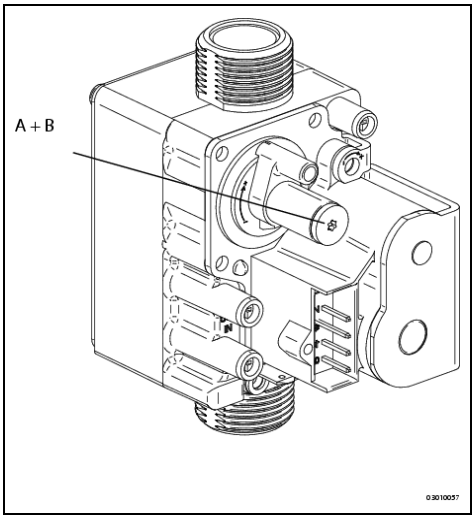

Note

Check that the measurement nipples used are gas-tight.

CAUTION

Check that the Flue gas sampling point and the Gas test point are gas-tight. No adjustment should be made to the gas valve without prior permission of Intergas Technical Services.

Gas type	Natural gas H	Propane P
Gas category	2H G20 20mBar	3P G31(propane) 37mBar
CO_2 % at high setting(H) *(🔧 and + 2x)* *With opened casing.* ***N.B. Not adjustable***	9.1 ± 0.5	10.3 ± 0.5
CO_2 % at low setting (L) *(🔧 and −)* *With front cover removed*	Equal to or max. 0,3 % lower than the value at high setting. Absolute min. value is 8,6 %	Min. 0,3 and max. 0,6 lower than the value at high setting. Absolute min. value is 9,3 %
Gas supply pressure (mBar)	20-30	25-35
Gas restriction ring (HRE 24/18)	620	*505*
Gas restriction ring (HRE 28/24 and 36/30)	695	*550*
Gas restriction ring (HRE 36/40)	655	525
Minimum rpm (% of max) *(parameter c and d)*	30	40
Min. start rpm (% of max) *(parameter F and F .)*	70	50

Examples :

CO_2 adustment at low setting for natural gas
The CO_2l percentage at low setting must be **equal to or max. 0.3 % lower** than the **percentage** at high setting. Important: The CO_2 percentage at low setting must never be under 8.6%. Example 1: **CO_2** percentage **at high setting is 9.2 % → then CO_2 percentage. at low setting must be 8.9 – 9.2 % .** Example 2: **CO_2** percentage. **at high setting is 8.7 % → then CO_2 percentage.at low setting must be 8.6 – 8.7 % .**

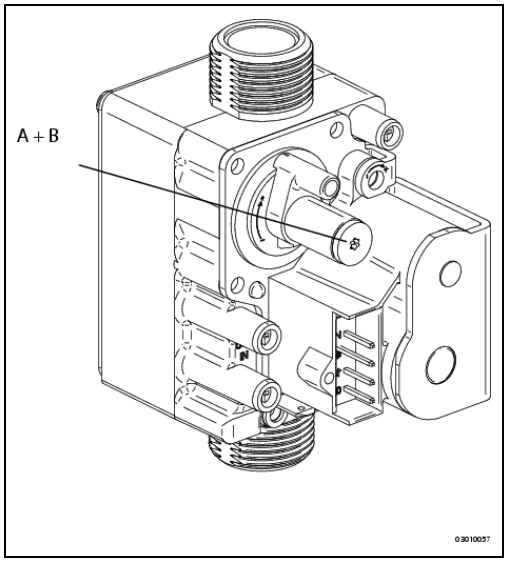

CO_2 adjustment at low setting for propane (G31)
The CO_2 percentage at low setting must be between **0.3 % and 0.6 % lower** than the percentage at high setting. Important: The CO_2 percentage at low setting must never be under 9.3 %. Example 1: **CO_2 percentage at high setting is 10.5 % → then CO_2 percentage at low setting must be 9.9 – 10.2 %** Example 2: **CO_2 percentage at high setting is 9.8 % → then CO_2 percentage at low setting must be 9.3 – 9.5 % .**

10.9 Conversion to different gas type

CAUTION

Work on gas carrying parts may only be carried out by a qualified competent person.

If a different type of gas is connected to the appliance than that for which the appliance has been set by the manufacturer, the gas metering ring should be replaced. Conversion sets for other types of gas are available to order.

10.9.1 Converting the gas restriction.

1. Switch the boiler off and isolate the boiler from the mains power.
2. Close the gas tap.
3. Remove the front panel from the appliance.
4. Unscrew the coupling (A) above the gas valve and twist the gas mixing tube towards the rear (B).
5. Replace the O-ring (C) and the gas restriction (D) with the rings from the conversion set.
6. Re-assemble in reverse sequence.
7. Open the gas tap.
8. Check the gas connections before the gas valve for gas-tightness.
9. Switch on the mains power.
10. Check the gas connections after the gas valve for gas-tightness (during operation).
11. Now check the setting of the CO_2 percentage at high setting (H in display) and low setting (L in display).

CAUTION

It is not possible to adjust the CO_2 percentage at high setting. When the CO_2 percentage at high setting is not within the prescribed tolerance band please contact Intergas Heating.

For adjusting CO_2 percentage at low setting see § 10.8.

Place a sticker for the gas type set over the existing sticker next to the gas valve.
Place a sticker for the gas type set next to the identification plate.

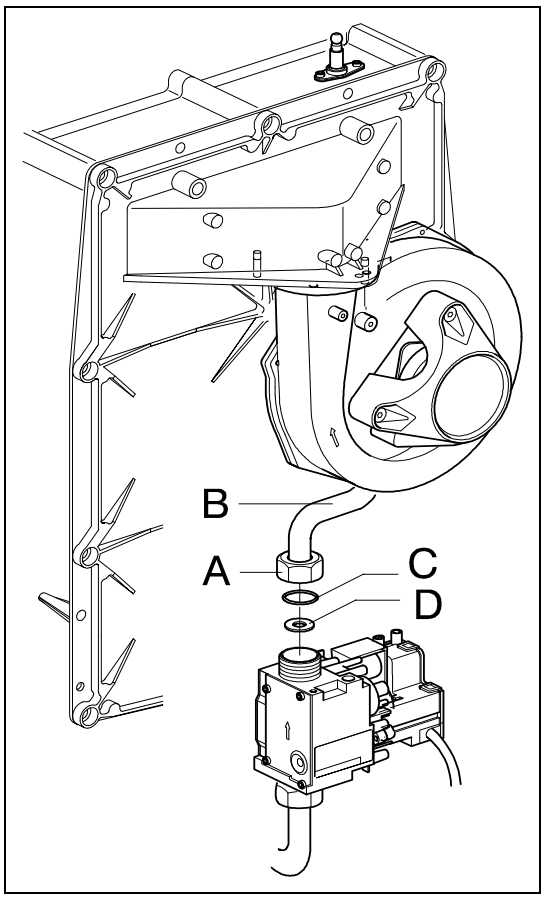

11 FAULTS

11.1 Fault codes

If the fault LED is flashing, the boiler controller has detected a fault. A fault code will be indicated on the main display.

Once the fault has been rectified the boiler controller can be restarted.

Press the reset key on the operating panel.

The following faults are distinguished

Main display	Display Fault	Possible Solution
10, 11, 12, 13, 14	Sensor fault S1 Flow switch does not disconnect	• Check wiring for break • Replace S1 • Check flow switch
20, 21, 22, 23, 24	Sensor fault S2	• Check wiring for break • Replace S2
0	Sensor fault after self check	• Replace S1 and/or S2
1	Temperature too high	• Air in installation • Pump not running • Unsufficient flow in installation, radiators closed, pump setting too low • Flow switch sticking
2	S1 and S2 interchanged	• Check cable loom • Replace S1 or S2
4	No flame signal	• Gas tap closed • No or incorrect ignition gap • Gas supply pressure too low of failling • Gas valve or ignition unit not powered
5	Poor flame signal	• Condensate drain blocked • Check adjustment of gas valve
6	Flame detection fault	• Replace ignition cable + spark plug cap • Replace ignition unit • Replace boiler controller
8	Incorrect fan speed	• Fan catching on casing • Wiring between fan and casing • Check wiring for poor wire contact • Replace fan*
29,30	Gas valve relay faulty	• Replace boiler controller

CAUTION

Always use original Intergas spare parts when replacing components.

Failure to fit the sensors S1 and/or S2, or to fit them correctly can result in serious damage.

CAUTION

*** The boiler is equipped with a non-return valve (A), positioned above the fan. Ensure the non-return valve is repositioned correctly when replacing the fan.**

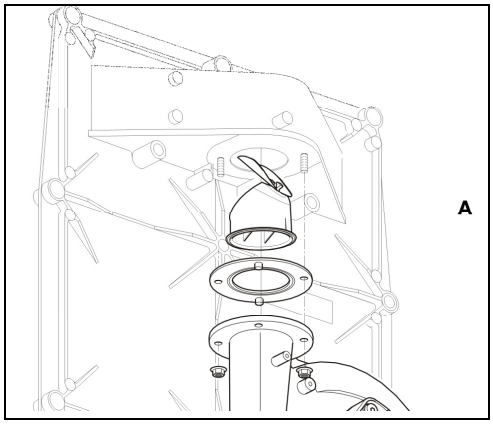

11.2 Other faults

11.2.1 Burner does not ignite

Possible causes:		Solution:
Gas tap is closed.	➡	Open gas tap.
No ⬇		
Air in the gas pipe.	➡	Remove air form gas pipe.
No ⬇		

Gas supply pressure too low.	➡	Contact the gas supply company.
No ⬇		
No ignition.	➡	Replace ignition electrode.
No ⬇		
No spark. Ignition unit on gas valve faulty.	➡	Check the cabling. Check the spark plug cap. Replace the ignition unit.
No ⬇		
Gas/air adjustment not correctly set.	➡	Check adjustment. See gas/air adjustment.
No ⬇		
Fan faulty.	➡	Check the wiring. Check the fuse , if necessary, replace the fan.
No ⬇		
Fan dirty.	➡	Clean the fan.
No ⬇		
Gas valve faulty.	➡	Replace the gas valve. Re-adjust the gas valve, see gas/air adjustment

11.2.2 Burner ignites noisily

Possible causes:		Solution:
Gas supply pressure too high.	➡	The house pressure switch may be faulty. Contact the gas company.
No ⬇		
Incorrect ignition gap.	➡	Replace the ignition pin. Check the ignition electrode gap.
No ⬇		
Gas/air adjustment not correctly set.	➡	Check the setting. See gas/air adjustment.
No ⬇		
Weak spark.	➡	Check the ignition gap. Replace the ignition electrode. Replace the ignition unit on the gas valve.

Checking ignition pin position using test tool

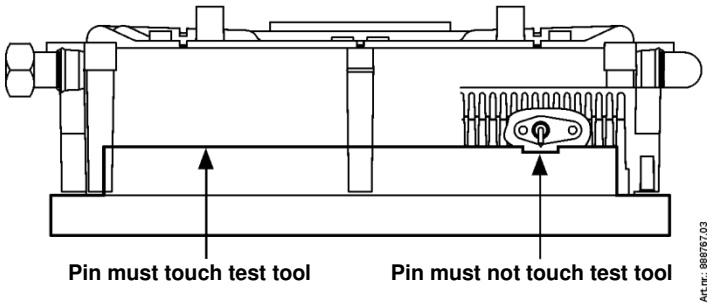

11.2.3 Burner resonating

Possible causes:		Solution:
Gas supply pressure too low.	➡	The house pressure switch may be faulty. Contact the gas company.
No ⬇		
Recirculation of combustion gasses.	➡	Check the gas flue an the air supply.
No ⬇		
Gas/air adjustment not correctly set.	➡	Check the setting, see gas/air adjustment.

11.2.4 No heating (CH)

Possible causes:		Solution:
Room thermostat / weather-dependent adjustment not closed or faulty.	➡	Check the wiring. Replace the thermostat. Replace the weather-dependant adjustment.
No ⬇		
No current (24 V).	➡	Check the wiring against the diagram. Check the connector X4. Replace the faulty manager.
No ⬇		

Pump not running.	➡	Check the power supply. Check connector X2. Replace faulty pump.
No ⬇		
Burner not firing on CH: sensor S1 or S2 faulty.	➡	Replace sensor S1 or S2. See fault code.
No ⬇		
Burner does not ignite.	➡	See burner does not ignite.

11.2.5 The power is reduced

Possible causes:		Solution:
At high rpm the power has fallen by more than 5%.	➡	Check appliance and flue system for fouling. Clean the appliance and flue system.

11.2.6 CH does not reach temperature

Possible causes:		Solution:
Room thermostat setting incorrect.	➡	Check the setting and if necessary adjust: Set to 0.1A.
No ⬇		
Temperature is too low.	➡	Increase the CH temperature. See Operating CH . Check outside sensor for short-circuiting. Rectify.
No ⬇		
Pump not running correctly. Pump setting is too low.	➡	Increase pump setting, or replace the pump.
No ⬇		
No circulation in the installation.	➡	Check whether there is circulation: at least 2 or 3 radiators must be open.
No ⬇		
The boiler power has not been correctly set for the installation.	➡	Adjust the power. See setting maximum CH power.
No ⬇		
No heat transfer as a result of lime scale or fouling in the heat exchanger.	➡	De-scale or flush the heat exchanger on the CH side.

11.2.7 No hot water (DHW)

Possible causes:		Solution:
Flow switch not switching.	➡	DHW flow < 2.0 l/min. Replace the flow switch.
No ⬇		
No current at the flow switch (5V DC).	➡	Check the wiring according to the diagram.
No ⬇		
Burner not firing on DHW: S3 faulty.	➡	Replace S3.
No ⬇		
Burner does not ignite.	➡	See burner does not ignite.

11.2.8 Hot water does not reach temperature

Possible causes:		Solution:
DHW flow to high.	➡	Adjust the inlet assembly.
No ⬇		
Temperature setting for water circuit too low.	➡	Set the hot water circuit, depending on the desired temperature.
No ⬇		
No heat transfer as a result of lime scale or fouling in the heat exchanger DHW side.	➡	Descale or flush the exchanger DHW side.
No ⬇		
Cold water temperature <10°C.		

12 MAINTENANCE

The appliance and the installation should be checked and if necessary cleaned every year by a registered expert.

For assembly and disassembly the following tools can be used:

1. Cross head screwdriver
2. Allen key 8 mm
3. Fork spanner 30 mm

After servicing, complete the relevant Benchmark Service Record section located on page 49 of this document.

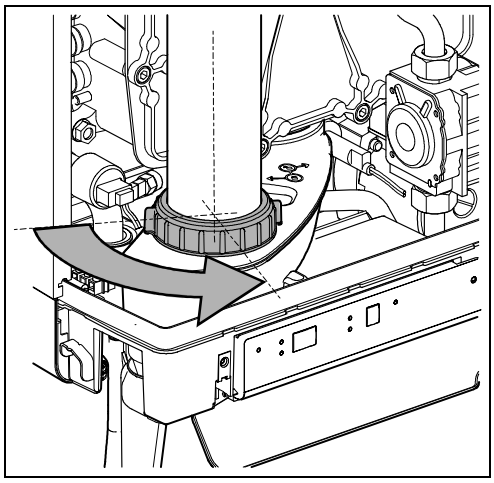

CAUTION

Work on gas carrying parts may only be carried out by an authorised installer.
When the appliance has just been operating parts may be hot.

CAUTION

The integrated insolation and burner seal contain ceramic fibres.

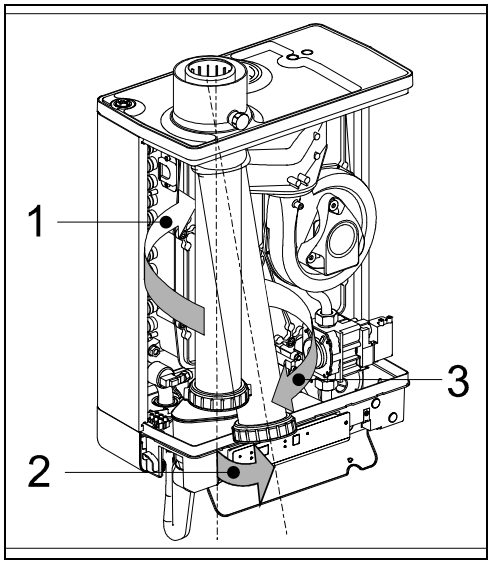

12.1 Disassembly

1. Switch the boiler off and isolate the boiler from the mains power.
2. Close the gas tap.
3. Open the display cover and turn the two screws on the left- and right-hand side of the display and remove the front panel.
4. Wait until the appliance has cooled down.
5. Unscrew the coupling nut at the base of the flue pipe anti-clockwise.
6. Slide the flue pipe upwards (1) turning it anti-clockwise until the bottom of the pipe is above the condensate drain pan connection. Pull the bottom of the pipe forwards (2) and remove the pipe downwards (3) turning it anti-clockwise.
7. Lift the condensate drain pan on the left-hand side from the connection to the condensate trap (4) and turn it to the right with the condensate trap connection over the edge of the base tray (5). Push the back of the condensate drain pan downward from the connection to the heat exchanger (6) and remove it from the appliance.
8. Remove the connector from the fan and the ignition unit from the gas valve.
9. Unscrew the coupling below the gas valve.
10. Unscrew the shoulder bolts from the front cover and remove this complete with gas valve and fan to the front (NB: Ensure that the burner, insulation plate, gas valve, gas supply and fan do not get damaged).

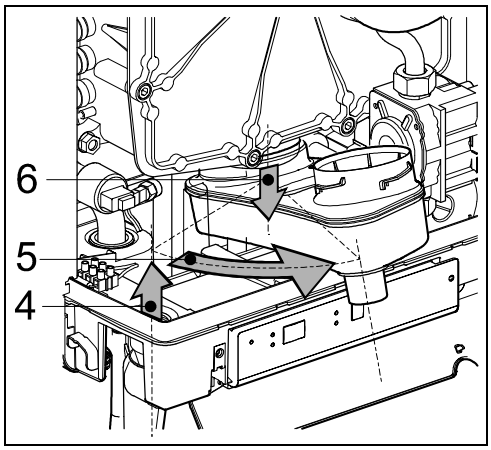

Note

When the appliance is connected to a wall mounting jig with built-in expansion vessel a regular inspection of the expansion vessel pressure is advisable. Access to re-pressurise the expansion vessel is at the rear back of the vessel.

CAUTION

The boiler is equipped with a non-return valve (A), positioned above the fan. Ensure the non-return valve is repositioned correctly when replacing the fan.

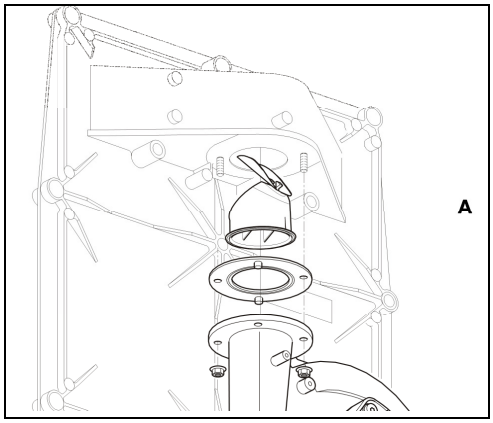

12.2 Cleaning

1. Clean the heat exchanger from top to bottom with a plastic brush or compressed air.
2. Clean the underside of the heat exchanger.
3. Clean the condensate drain pan with water.
4. Clean the condensate trap with water.

12.3 Assembly

CAUTION

When fitting the various seals check for damage, hardening, tears or hairline tears and/or discoloration. Where necessary fit a new seal. Also check whether seals are still correctly positioned.

Warranty will be void by not correctly replacing removed parts!

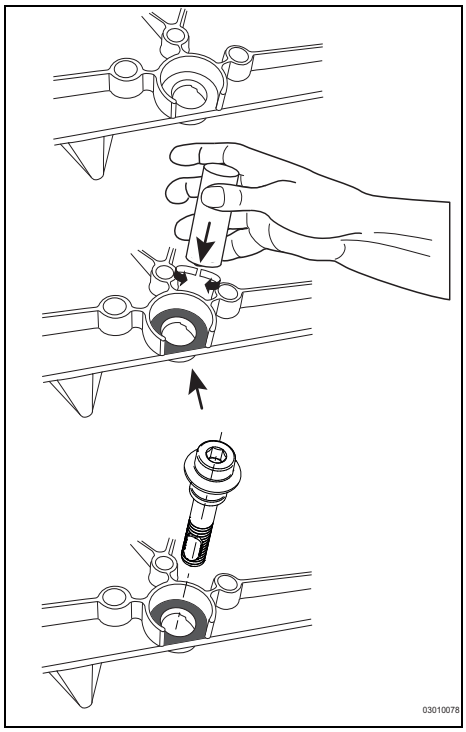

1. Check if there is a small layer of ceramic grease on the contact surface between the shoulder bolt and the front plate.
2. Ensure that the seal around the front cover is installed correctly. Place the front cover on the heat exchanger and secure it using the socket head screws plus serrated lock washers. Tighten the shoulder bolts equally hand-tight (10 – 12 Nm), working crosswise. See the picture for the correct sequence.
   N.B. The picture is showing a front plate with 11 shoulder bolts (Kombi Kompakt HRE 28/24, HRE 36/30 or HRE 36/40). The front plate for the HRE 24/18 has 9 shoulder bolts.
3. Fit the gas connection below the gas valve.
4. Fit the connector to the fan and the ignition unit to the gas valve.
5. Fit the condensate drain by sliding on to the exchanger outlet stump (1) with the condensate trap connection still in front of the base tray. Then turn it to the left (2) and push it downwards into the condensate trap connection (3). Make sure in doing this that the back of the condensate drain pan comes to rest on the lug at the back of the base tray (A).
6. Fill the condensate trap with water and fit it to the connection below the condensate drain pan.
7. Slide the flue pipe, turning it anti-clockwise, with the top around the flue adapter, into the top cover. Insert the bottom into the condensate drain pan and tighten the coupling nut clockwise.
8. Open the gas tap and check the gas connections below the gas valve and on the mounting bracket for leakage.
9. Check the CH and the water pipes for leakage.
10. Switch on the mains power.
11. Switch the appliance on with the ⏻ key.
12. Check the front cover, the fan connection on the front cover and the flue pipe components for leakage.
13. Check the gas/air adjustment.
14. Fit the casing, tighten the two screws left and right of the display and close the display cover.
15. Check the heating and the hot water supply.

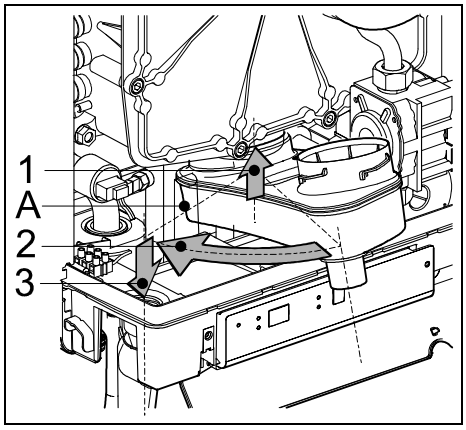

12.4 Combustion

During routine servicing, and after any maintenance or change of part of the combustion circuit the following must be checked:

- The integrity of the flue system and the flue seals, as described in § 8.5 and the British Standards codes of practices, specifically BS 5440.
- The integrity of the boiler combustion circuit and the relevant seals, as described in § 12.3.
- The operational (working) gas inlet pressure at maximum rate, as described in § 10.7.2.
- The combustion performance, as described in § 10.7 and § 10.8.

BS 6798: 2009 Specification for installation and maintenance of gas-fired boilers of rated input not exceeding 70 kW net advises that:

- The person carrying out a combustion measurement should have been assessed as competent in the use of a flue gas analyser and the interpretation of the results;
- The flue gas analyser used should be one meeting the requirements of BS7927 or BS-EN50379-3 and be calibrated in accordance with the analyser manufacturers' requirements, and
- Competence can be demonstrated by satisfactory completion of the CPA1 ACS assesment, which covers the use of electronic portable combustion gas analysers in accordance with BS7967, Parts 1 to 4.

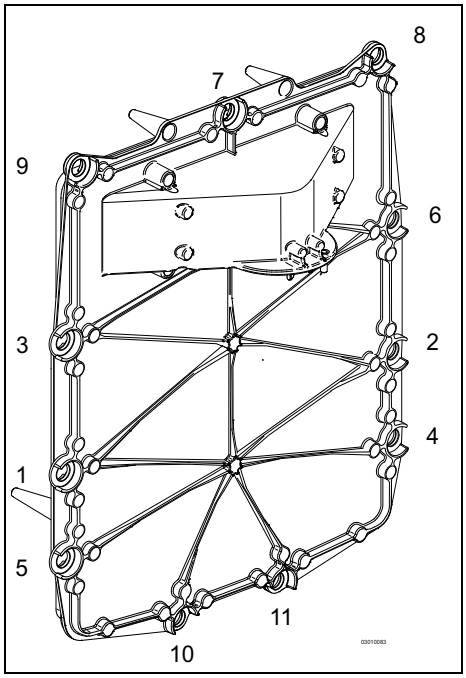

Connect the flue gas analyser to the flue gas sampling point (X) and check combustion as described in § 10.7. If the CO_2 percentage reading of the combustion gases at low setting falls into the bandwith stated in § 10.8 the combustion setting is correct and no further adjustment is needed. If the combustion reading falls outside the prescribed tolerance band and the integrity of the complete flue system and combustion circuit seals have been verified as well as the inlet gas pressure proceed to adjust the gas/air ratio as descibed in § 10.8. When the CO_2 percentage at high setting is not within the prescribed tolerance band please contact Intergas Heating.

13 ELECTRICAL DIAGRAM

13.1 Electrical diagram HRE 24/18, 28/24 & 36/30

A	Earth connections heat-exchanger	F	Fuse (2A T)	P1	CH pump	S3	DHW sensor
B	Spark plug cover	G	Gas valve + ignition unit	R	Resistance	S5	Flow switch
C	Boiler controller	I	Ionisation-/ ignition probe	S1	Flow sensor	S7	CH water pressure sensor
E	Earth connections boiler controller	M	Main voltage	S2	Return sensor	V	Fan

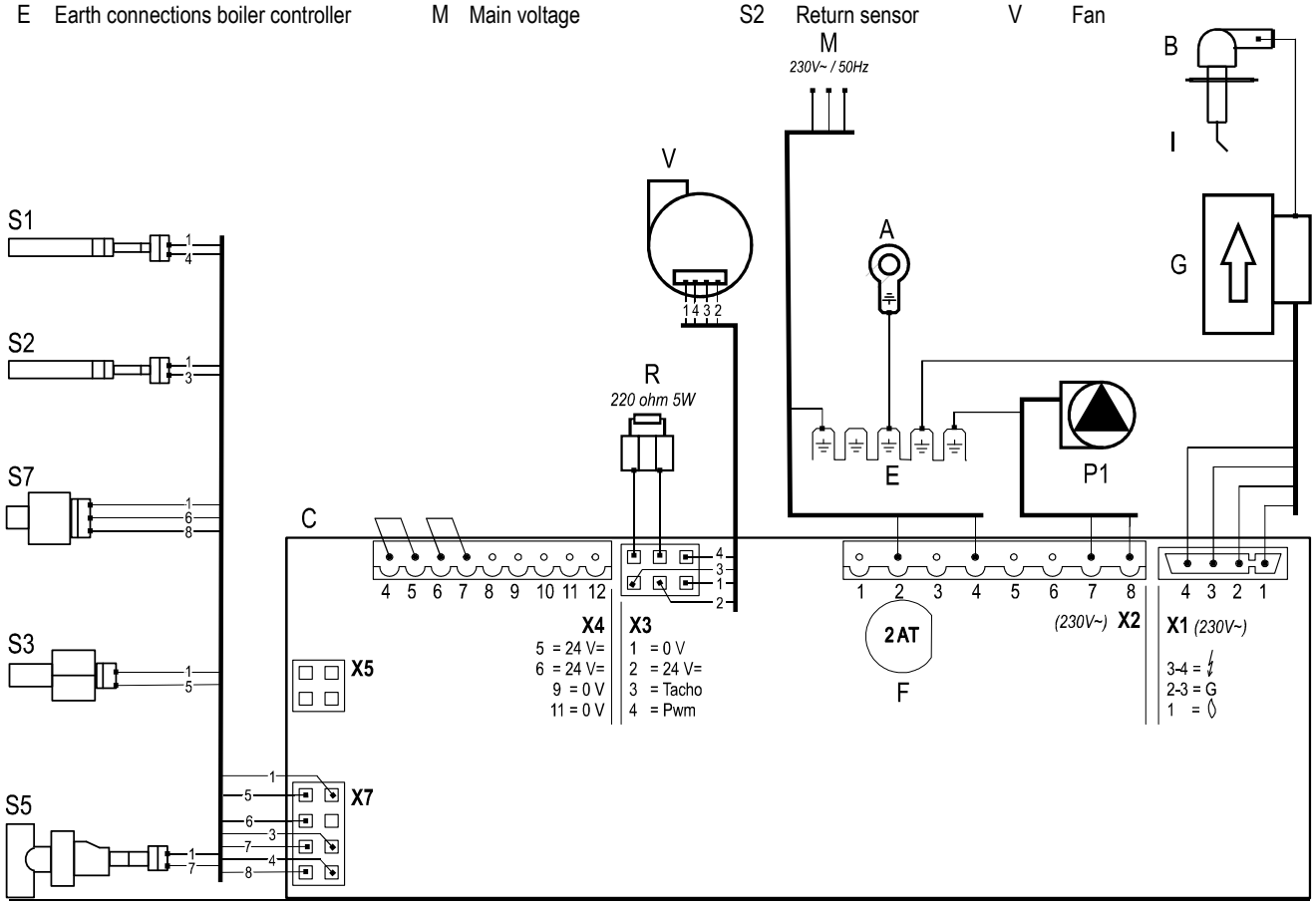

Connector X4 *24V=*	4-5		External saving switch *(remove connection)*
	6-7		On/off room thermostat *(0,1A-24Vdc)* and/or frost thermostat (remove connection 6-7)
	8-9		External sensor *(12k ohm / 25°C)*
	11-12		OpenTherm thermostat (remove connection 6-7)
Connector X2 *230V~*	1-3		Room thermostat 230 AC (1 = Switch live, 3 = Live(fused)
	1-3		Frost thermostat 230 AC (1 = Switch live, 3 = Live(fused)
	2-4		Mains (2 = Live (brown), 4 = Neutral (blue))
	7-8		CV-pump (8 = Live (brown), 7 = Neutral (blue)
	3-5-6		Shut-off valve, floor heating (3 = Live (brown), 5 = Switch (black), 6 = Neutral (blue) (VC4013 Honeywell 230V~)
Connector X5			Computer interface

13.2 Electrical diagram HRE 36/40

A	Earth connections heat-exchanger	F	Fuse (2A T)	P1	CH pump	S3	DHW sensor
B	Spark plug cover	G	Gas valve + ignition unit	R	Resistance	S5	Flow switch
C	Boiler controller	I	Ionisation-/ ignition probe	S1	Flow sensor	S7	CH water pressure sensor
E	Earth connections boiler controller	M	Main voltage	S2	Return sensor	V	Fan

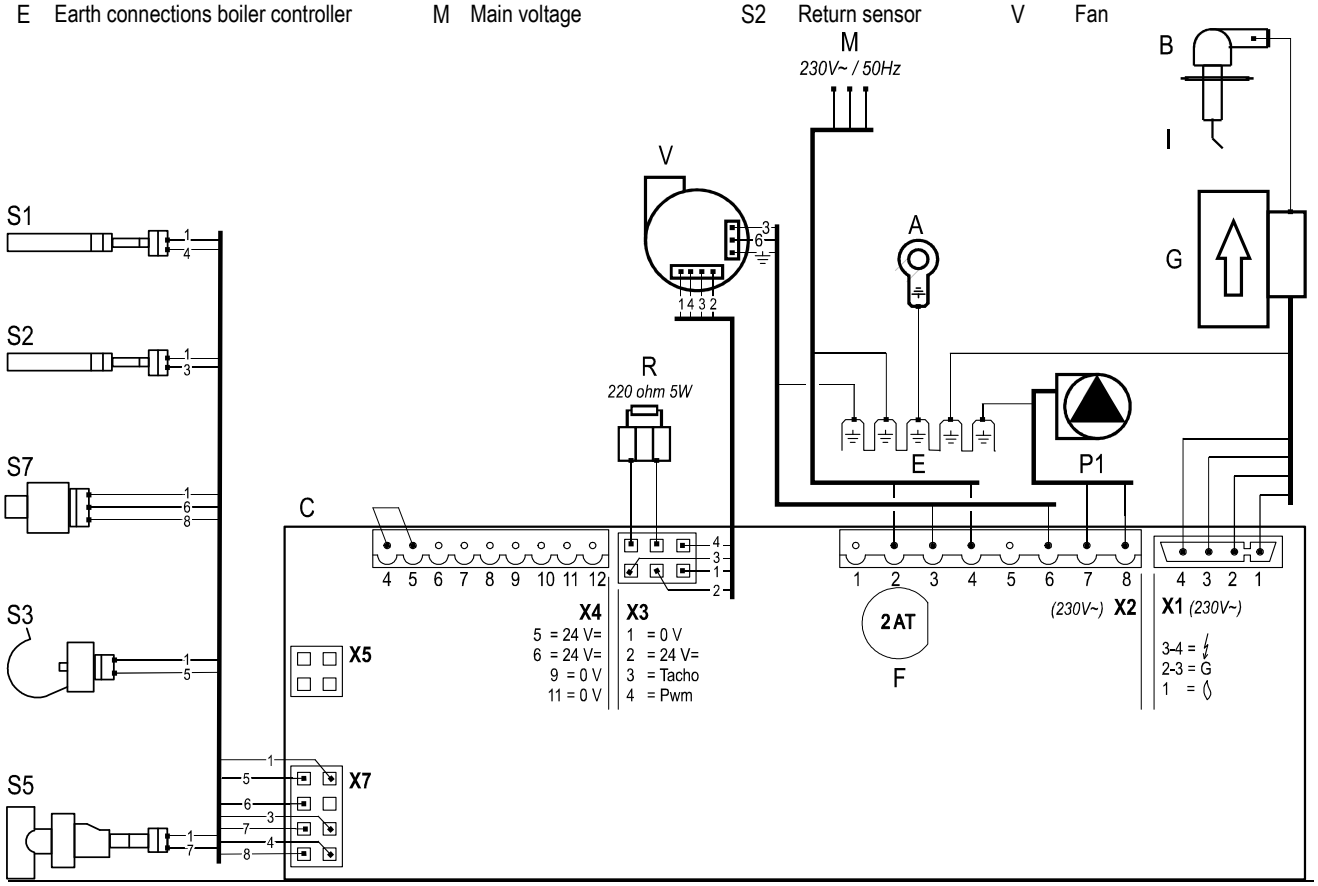

Connector X4 *24V=*	4-5		External saving switch *(remove connection)*
	6-7		On/off room thermostat *(0,1A-24Vdc)* and/or frost thermostat (remove connection 6-7)
	8-9		External sensor *(12k ohm / 25°C)*
	11-12		OpenTherm thermostat (remove connection 6-7)
Connector X2 *230V~*	1-3		Room thermostat 230 AC (1 = Switch live, 3 = Live(fused)
	1-3		Frost thermostat 230 AC (1 = Switch live, 3 = Live(fused)
	3-6		Power supply (230 V) fan
	2-4		Mains (2 = Live (brown), 4 = Neutral (blue))
	7-8		CV-pump (8 = Live (brown), 7 = Neutral (blue)
	3-5-6		Shut-off valve, floor heating (3 = Live (brown), 5 = Switch (black), 6 = Neutral (blue) (VC4013 Honeywell 230V~)
Connector X5			Computer interface

13.3 NTC resistances

NTC 12kOhm					
T [°C]	**R[ohm]**	**T [°C]**	**R[ohm]**	**T [°C]**	**R[ohm]**
-15	76020	25	12000	65	2752
-10	58880	30	9805	70	2337
-5	45950	35	8055	75	1994
0	36130	40	6653	80	1707
5	28600	45	5522	85	1467
10	22800	50	4609	90	1266
15	18300	55	3863	95	1096
20	14770	60	3253	100	952

14 SHORT SPARES LIST

Description	Article number
Boiler controller HRE 24/18, 28/24 & 36/30	074447
Boiler controller HRE HRE 36/40	074637
Fan 24 V, HRE 24/18, 28/24 & 36/30	074397
Fan 230 V, HRE 36/40	074577
Wall mounting strip	145308
Temperature sensor (heat exchanger)	200117
Temperature sensor (DHW)	200127
CH Pump HRE 24/18, 28/24 & 36/30	210177
CH Pump HRE 36/40	210327
Ignition / ionisation electrode	209367
Ignition cable	074607
Gas valve Siemens	801467
Ignition module	801477
Condensate trap HRE 24/18, 28/24 & 36/30)	844187
Condensate trap HRE 36/40	844787
Flow switch (DHW)	844267
Condensate collector	847037
Pressure sensor (CH)	864087
Seal gas valve (inlet)	875757
O-ring gas restriction ring	875827
O-ring front plate Combi Compact HRE 36/30 & HRE 36/40	876597
O-ring front plate Combi Compact HRE 28/24	877927
O-ring front plate Combi Compact HRE 24/18	876467
Seal ring condensate collector (heat exchanger connection)	878147
O-ring flue pipe dia 68*4	878537
Seal ring flue pipe (outlet side)	878547
Condensate trap connection	878577
Sampling cap	847000

15 WARRANTY CONDITIONS

With due regard for the conditions indicated below, Intergas Heating Ltd warrants to the authorised installer the soundness of the materials used in and the correct operation of its Central Heating products, when used for the purpose for which they are delivered. As the occasion arises we should be enabled to ascertain, on site if necessary, the soundness of the warranty entitilement.

The warranty comprises:

The warranty is limited to the free-of-charge resupply of parts that during the warranty period, entirely in our judgement exhibit material or manufacturing faults that are not the result of normal wear etc. Such parts should be sent to us carriage paid together with an indication of the defect and after replacement become our property.

1. The warranty period on parts is 2 years calculated from the date of installation. The extended warranty period on parts is 3 years calculated from the date of installation. The extended warranty is effective only if the annex to the warranty certificate has been signed by the purchaser and returned to us within 8 days of the date of installation.
2. The warranty period on the water tightness of the boiler's heat exchanger is 10 years, provided however that if, as a result of corrosion, leakages arise which in our view cannot be rectified on site, we will exclusively supply that boiler part on the basis of old for new, calculated at the time of replacement from the installation date.
3. The warranty ceases to apply if it is ascertained that the defects, damage or excessive wear are attributable to improper use or injudicious treatment or inexpert repair, setting, installation or maintenance by unauthorised installers or to the product being exposed to substances containing aggressive chemicals (including hair lacquer) and other harmful substances.
4. The warranty also ceases to apply if pipes and couplings have been used in the installation which can cause oxygen diffusion, or if the defect is the result of depositing of boiler scale (harmful to the boiler and the installation).
   Surface damage and transport damage are not covered by the warranty. The right to warranty ceases to apply if it cannot be demonstrated that, after commencement of use, the central heating boiler has been serviced at least once a year by an installer authorised for that purpose by or on behalf of the gas company. The instructions for installation and use which we issue for the boilers concerned should be complied with in full.
5. The manufacturer's liability under the agreement is expressly limited to fulfilment of the warranty obligations defined in this article. All claims for compensation, except for those relating to failure to fulfil the warranty obligations, are excluded. With due regard for the mandatory provisions regarding product or other liability, no rights may ever be derived at any time with regard to any consequential loss, loss of net worth or any loss whatsoever that might arise from defects in materials delivered or work performed by the manufacturer.
   In addition, all offers and agreements concerning deliveries and/or services to be made or provided by us are governed by the Conditions of Sale.
   A copy of these conditions will be sent to you free of charge on request. Conditions to the contrary are expressly rejected.
6. The warranty is effective only if the annex to this warranty certificate has been signed by the purchaser and returned to us within 8 days of the date of installation. By signing the warranty card the purchaser states his/her agreement that the items have been delivered in good condition.
7. If the installer's business has been terminated before the end of the warranty period, the user may invoke our warranty obligations to the installer.

Use as intended

The appliance, as described in this documentation, is intended for heating rooms via a central heating installation and/or for supplying hot water. Any other use lies outside the intended use of the appliance. No liability can be accepted for loss or damage arising from incorrect use.

16 CE DECLARATION

Declaration of conformity in accordance with ISO IEC GUIDE 22.

Manufacturer	Intergas Heating Ltd
Address	Building 94, Bay 1 Vantage Point The Pensnett Estate Kingswinford West Midlands DY6 7FS

Hereby declares that the CH appliances:

Combi Compact HRE 36/40
Combi Compact HRE 36/30
Combi Compact HRE 28/24
Combi Compact HRE 24/18

meets the provisions of the following directives:

- Low Voltage Directive (2006/95/EC)
- Gas Appliances Directive (2009/142/EC)
- Boiler Efficiency Directive for new oil- and gas-fired central heating boilers (92/42/EC)
- EMC Directive (2004/108/EC)

H. Bosscher, November 2013

17 GAS BOILER SYSTEM COMMISSIONING CHECKLIST

GAS BOILER SYSTEM COMMISSIONING CHECKLIST

This Commissioning Checklist is to be completed in full by the competent person who commissioned the boiler as a means of demonstrating compliance with the appropriate Building Regulations and then handed to the customer to keep for future reference.

Failure to install and commission according to the manufacturer's instructions and complete this Benchmark Commissioning Checklist will invalidate the warranty. This does not affect the customer's statutory rights.

Customer name:	Telephone number:
Address:	
Boiler make and model:	
Boiler serial number:	
Commissioned by (PRINT NAME):	Gas Safe register number:
Company name:	Telephone number:
Company address:	
	Commissioning date:
To be completed by the customer on receipt of a Building Regulations Compliance Certificate*	
Building Regulations Notification Number (if applicable):	

CONTROLS (tick the appropriate boxes)				
Time and temperature control to heating	Room thermostat and programmer/timer		Programmable room thermostat	
	Load/weather compensation		Optimum start control	
Time and temperature control to hot water	Cylinder thermostat and programmer/timer		Combination Boiler	
Heating zone valves	Fitted		Not required	
Hot water zone valves	Fitted		Not required	
Thermostatic radiator valves	Fitted		Not required	
Automatic bypass to system	Fitted		Not required	
Boiler interlock			Provided	

ALL SYSTEMS				
The system has been flushed and cleaned in accordance with BS7593 and boiler manufacturer's instructions			Yes	
What system cleaner was used?				
What inhibitor was used?		Quantity		litres
Has a primary water system filter been installed?	Yes		No	

CENTRAL HEATING MODE measure and record:			
Gas rate	m³/hr	**OR**	ft³/hr
Burner operating pressure (if applicable)	mbar	**OR** Gas inlet pressure	mbar
Central heating flow temperature			°C
Central heating return temperature			°C

COMBINATION BOILERS ONLY				
Is the installation in a hard water area (above 200ppm)?	Yes		No	
If yes, and if required by the manufacturer, has a water scale reducer been fitted?	Yes		No	
What type of scale reducer has been fitted?				
DOMESTIC HOT WATER MODE Measure and Record:				
Gas rate	m³/hr	**OR**	ft³/hr	
Burner operating pressure (at maximum rate)	mbar	**OR** Gas inlet pressure at maximum rate	mbar	
Cold water inlet temperature			°C	
Hot water has been checked at all outlets	Yes		Temperature	°C
Water flow rate			l/min	

CONDENSING BOILERS ONLY		
The condensate drain has been installed in accordance with the manufacturer's instructions and/or BS5546/BS6798	Yes	

ALL INSTALLATIONS							
Record the following:	At max. rate:	CO	ppm	**AND**	CO/CO_2	Ratio	
	At min. rate: (where possible)	CO	ppm	**AND**	CO/CO_2	Ratio	
The heating and hot water system complies with the appropriate Building Regulations						Yes	
The boiler and associated products have been installed and commissioned in accordance with the manufacturer's instructions						Yes	
The operation of the boiler and system controls have been demonstrated to and understood by the customer						Yes	
The manufacturer's literature, including Benchmark Checklist and Service Record, has been explained and left with the customer						Yes	

Commissioning Engineer's Signature
Customer's Signature
(To confirm satisfactory demonstration and receipt of manufacturer's literature)

*All installations in England and Wales must be notified to Local Authority Building Control (LABC) either directly or through a Competent Persons Scheme. A Building Regulations Compliance Certificate will then be issued to the customer.

benchmark COLLECTIVE MARK
THE MARK OF QUALITY FOR THE INSTALLATION, COMMISSIONING AND SERVICING OF DOMESTIC HEATING AND HOT WATER SYSTEMS

© Heating and Hotwater Industry Council (HHIC)

www.centralheating.co.uk

18 SERVICE RECORD

SERVICE RECORD

It is recommended that your heating system is serviced regularly and that the appropriate Service Interval Record is completed.

Service Provider

Before completing the appropriate Service Record below, please ensure you have carried out the service as described in the manufacturer's instructions. Always use the manufacturer's specified spare part when replacing controls.

SERVICE 01					Date:
Engineer name:					
Company name:					
Telephone No:					
Gas safe register No:					
Record:	At max. rate:	CO	ppm	**AND**	CO_2 %
	At min. rate: (Where Possible)	CO	ppm	**AND**	CO_2 %
Comments:					
Signature					

SERVICE 02					Date:
Engineer name:					
Company name:					
Telephone No:					
Gas safe register No:					
Record:	At max. rate:	CO	ppm	**AND**	CO_2 %
	At min. rate: (Where Possible)	CO	ppm	**AND**	CO_2 %
Comments:					
Signature					

SERVICE 03					Date:
Engineer name:					
Company name:					
Telephone No:					
Gas safe register No:					
Record:	At max. rate:	CO	ppm	**AND**	CO_2 %
	At min. rate: (Where Possible)	CO	ppm	**AND**	CO_2 %
Comments:					
Signature					

SERVICE 04					Date:
Engineer name:					
Company name:					
Telephone No:					
Gas safe register No:					
Record:	At max. rate:	CO	ppm	**AND**	CO_2 %
	At min. rate: (Where Possible)	CO	ppm	**AND**	CO_2 %
Comments:					
Signature					

SERVICE 05					Date:
Engineer name:					
Company name:					
Telephone No:					
Gas safe register No:					
Record:	At max. rate:	CO	ppm	**AND**	CO_2 %
	At min. rate: (Where Possible)	CO	ppm	**AND**	CO_2 %
Comments:					
Signature					

SERVICE 06					Date:
Engineer name:					
Company name:					
Telephone No:					
Gas safe register No:					
Record:	At max. rate:	CO	ppm	**AND**	CO_2 %
	At min. rate: (Where Possible)	CO	ppm	**AND**	CO_2 %
Comments:					
Signature					

SERVICE 07					Date:
Engineer name:					
Company name:					
Telephone No:					
Gas safe register No:					
Record:	At max. rate:	CO	ppm	**AND**	CO_2 %
	At min. rate: (Where Possible)	CO	ppm	**AND**	CO_2 %
Comments:					
Signature					

SERVICE 08					Date:
Engineer name:					
Company name:					
Telephone No:					
Gas safe register No:					
Record:	At max. rate:	CO	ppm	**AND**	CO_2 %
	At min. rate: (Where Possible)	CO	ppm	**AND**	CO_2 %
Comments:					
Signature					

SERVICE 09					Date:
Engineer name:					
Company name:					
Telephone No:					
Gas safe register No:					
Record:	At max. rate:	CO	ppm	**AND**	CO_2 %
	At min. rate: (Where Possible)	CO	ppm	**AND**	CO_2 %
Comments:					
Signature					

SERVICE 10					Date:
Engineer name:					
Company name:					
Telephone No:					
Gas safe register No:					
Record:	At max. rate:	CO	ppm	**AND**	CO_2 %
	At min. rate: (Where Possible)	CO	ppm	**AND**	CO_2 %
Comments:					
Signature					

*All installations in England and Wales must be notified to Local Authority Building Control (LABC) either directly or through a Competent Persons Scheme. A Building Regulations Compliance Certificate will then be issued to the customer.

benchmark COLLECTIVE MARK
THE MARK OF QUALITY FOR THE INSTALLATION, COMMISSIONING AND SERVICING OF DOMESTIC HEATING AND HOT WATER SYSTEMS

© Heating and Hotwater Industry Council (HHIC)

www.centralheating.co.uk

Intergas boilers are manufactured in a Kiwa ISO 9001 certified production faccility.

Intergas Heating Ltd

882877-15

Intergas Heating Ltd
Building 94, Bay 1 Vantage Point
The Pensnett Estate
Kingswinford
West Midlands
DY6 7FS

Tel: 01527 888000
Fax: 01384 279480
info@intergasheating.co.uk
www.intergasheating.co.uk