spares & parts online
IBASIS.co.uk©

INTERGAS®

Compact HRE

18 OV (G.C. 41-291-04)

24 OV (G.C. 41-291-05)

30 OV (G.C. 41-291-06)

Installation, service and user instructions

Please read these installation instructions carefully before installing and using the appliance. Keep these installation instructions with the appliance.

Always act in accordance with the instructions indicated.

BENCHMARK SCHEME

Benchmark places responsibilities on both manufacturers and installers. The purpose is to ensure that customers are provided with the correct equipment for their needs, that it is installed, commissioned and serviced in accordance with the manufacturer's instructions by competent persons and that it meets the requirements of the appropriate Building Regulations. The Benchmark Checklist can be used to demonstrate compliance with Building Regulations and should be provided to the customer for future reference. Please read the Benchmark Checklist carefully, page 41, and complete all sections, as required by law, relevant to the appliance and installation. The details within the Checklist will be required in the event of any warranty work. On completion the Checklist must be left with the end user. The relevant sections of the Service Record, page 42, must be completed on each subsequent Service visit.

Installers are required to carry out installation, commissioning and servicing work in accordance with the Benchmark Code of Practice which is available from the Heating and Hotwater Industry Council who manage and promote the scheme. Visit www.centralheating.co.uk for more information.

CONTENT

1 Preface 4
1.1 Regulation 4
1.2 Warnings 4
1.3 Manual handling 4
1.4 Warnings on the box 4
1.5 Pictograms 4
1.6 Abbreviations and descriptions used 5
1.7 This manual 5
1.8 Service and technical support 5
1.9 Product identification 5

2 Safety regulations 6
2.1 General 6
2.2 The installation 6
2.3 Approvals 6
2.4 Technical data 7
2.5 Components 8

3 General boiler information 9
3.1 General 9
3.2 Boiler controller 9
3.3 Parameter list 9
3.4 Heat transfer 9
3.5 Central heating system 9
3.6 Room temperature control 9
3.7 Integrated clock 9

4 Operation 10
4.1 General 10
4.2 Central heating mode 10
4.3 Operating modes 10
4.4 Clock function 11
4.5 PC interface 11
4.6 Test programs 12
4.7 Frost protection 12

5 Installer handy hints 13

6 Accessories 14

7 Installation 16
7.1 Overall dimensions 16
7.2 Installation location 17
7.3 Installing the appliance 18

8 Connection 19
8.1 Connecting CH installation 19
8.2 Electrical connection 19
8.3 Gas connection 20
8.4 Flue system 21

9 Commissioning the appliance 24
9.1 Filling and venting the appliance and the installation 24
9.2 Commissioning the appliance 25
9.3 Setting and adjusting the clock functions 26
9.4 Additional functions 26
9.5 Shutting down 27

10 Setting and adjustment 28
10.1 Directly via the operating panel 28
10.2 Setting via the service code 29
10.3 Parameters 29
10.4 Setting maximum CH power 30
10.5 Adjusting pump setting 30
10.6 Weather– compensation adjustment 30
10.7 Conversion to different gas type 31
10.8 Setting gas/air adjustment 32

11 Faults 33
11.1 Fault codes 33
11.2 Other faults 33

12 Maintenance 36
12.1 Disassembly 36
12.2 Cleaning 36
12.3 Assembly 37
12.4 Combustion 37

13 Electrical diagram 38
13.1 NTC resistances 38

14 Short spares list 39

15 Warranty conditions 40

16 CE declaration 40

17 Gas boiler system commissioning checklist 41

18 Service record 42

© 2009 Intergas Heating Ltd. All rights reserved.

The information provided applies to the standard version of the product. Intergas Heating Ltd cannot therefore be held liable for any loss or damage arising from product specifications deviating from the standard version. The available information has been compiled with all possible care, but Intergas Heating Ltd cannot be held liable for any errors in the information or for the consequences thereof.

Intergas Heating Ltd cannot be held liable for any loss or damage arising from work performed by third parties.

Subject to change.

1 PREFACE

1.1 Regulation

The Intergas boiler meets the requirements of Statutory Instrument 'The Boiler (Efficiency) Regulations' and is deemed to meet the requirements of:

- Gas Appliance Directive 90/396/EEC
- Boiler Efficiency Directive 92/42/EEC
- Low Voltage Directive 2006/95/EC and
- Electromagnetic Compatibility Directive 2004/108/EC

Intergas declares that the materials used in the manufacturing of this appliance are non-hazardous and that no substances harmful to health are contained within the appliance.

1.2 Warnings

Intergas accepts no responsibility for the unsatisfactory performance of the appliance or flue arising from the failure to comply with the installation and user instructions. Incorrect installation could invalidate your guarantee and may lead to prosecution.

If the appliance is re-sold or installation transferred the appliance must be re-registered with Intergas in order to maintain the warranty.

The boiler must be installed in accordance with these instructions and the regulations currently in force. Read these instructions carefully before installing or using the appliance.

1.3 Manual handling

When moving the boiler always keep your back straight, bend your knees, don't twist, move your feet. Avoid bending forwards or sideways and keep the load as close to your body as possible. Where possible transport the boiler using a suitable trolley, sack truck or get some assistance. Grip the boiler firmly and before lifting establish where the weight is concentrated to determine the centre of gravity, repositioning yourself if necessary.

1.4 Warnings on the box

This is a fragile piece of equipment: Please provide a dry storage for the appliance.

This is a fragile piece of equipment: Please be very careful not to drop.

Store the appliance upright as indicated on the box.

Stack no more boxes than three high.

1.5 Pictograms

The following pictograms are used in this manual:

CAUTION

Procedures which – if they are not performed with the necessary caution – can result in damage to the product, the surrounding area or the environment, or in physical injury.

WARNING HIGH VOLTAGE

Risk of electrical shock.

FROST PROTECTION

Procedures which must be followed to prevent frost damage.

1.6 Abbreviations and descriptions used

Description	Referred to as
High efficiency	HE
Intergas Compact HRE OV wall mounted gas fired boiler	Appliance
Appliance plus pipe work for central heating	CH installation
Appliance plus pipe work for domestic hot water	DHW installation

1.7 This manual

This manual will enable you to assemble, install and maintain the appliance safely. Follow the instructions carefully. In case of doubt contact the manufacturer. Keep these installation instructions with the appliance.

1.8 Service and technical support

For information about specific adjustments, installation, maintenance and repair work, please contact:

Intergas Heating Ltd
Unit 6, West Court
Buntsford Park Road
Bromsgrove
Worcestershire
B60 3DX
Tel. 01527 888000
Fax. 01527 888001
info@intergasheating.co.uk
www.intergasheating.co.uk

1.9 Product identification

You will find the appliance data on the data plate on the underside of the appliance.

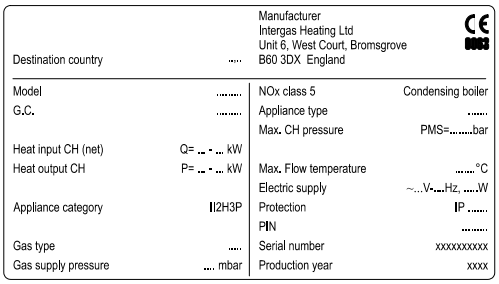

Destination country	.....	Manufacturer Intergas Heating Ltd Unit 6, West Court, Bromsgrove B60 3DX England	CE
Model	.....	NOx class 5	Condensing boiler
G.C.	.....	Appliance type	.....
		Max. CH pressure	PMS=.....bar
Heat input CH (net)	Q= ... - ... kW		
Heat output CH	P= ... - ... kW	Max. Flow temperature	.....°C
		Electric supply	~...V-....Hz, ...W
Appliance category	II2H3P	Protection	IP .....
		PIN	.....
Gas type	.....	Serial number	xxxxxxxxxx
Gas supply pressure	.... mbar	Production year	xxxx

2 SAFETY REGULATIONS

The manufacturer Intergas Heating Ltd accepts no liability whatsoever for damage or injury caused by failure to adhere (strictly) to the safety regulations and instructions, or carelessness during installation of the Intergas Compact HRE OV High Efficiency wall mounted gas fired boiler and any associated accessories.

2.1 General

It is law that all gas appliances are installed by a competent person, ie Gas Safe registered and in accordance with the following recommendations:

- Current Gas Safety (Installation and Use) Regulations
- All current building regulations
- Building Standards (Scotland) Consolidated
- This appliance must be installed in accordance with the Gas (Safety and Use) Regulations, current Building Regulations, Building Standards (Scotland), I.S.813 Installation of Gas Appliances (Ireland), IEE Wiring Regulations (BS 7671), Health and Safety Document No. 635 (Electricity at Work Regulations) and Local Water Authority Bye Laws
- UK Water Regulations and Bye Laws
- Health & Safety

2.2 The installation

The installation must comply with the following British Standards codes of practice:

- BS 5440: Flues and Ventilation for gas appliances of rated input not exceeding 70kW (Part 1 Flues)
- BS 5440: Flues and Ventilation for gas appliances of rated input not exceeding 70kW (Part 2 Air Supply)
- BS 5546: 2000 Installation of gas hot water supplies for domestic purposes.
- BS 5549: 1990 Forced circulation hot water systems
- BS 6700: 1997 Design, Installation, testing and maintenance of services supplying hot water
- BS 6798: 2000 Specification for installation of gas fired hot water boilers of rated input not exceeding 70kW
- BS 6891: 1998 Installation of low pressure gas pipe-work installations up to 35mm (RI)
- BS 7593: 1992 Code of practice for treatment of water in heating systems
- BS 7671: 2001 Requirements for electrical installations, IEE Wiring regulations

Reference should also be made to:

- Guide to condensing boiler installation assessment procedures for dwellings
- The institute of Gas Engineers document IGE/UP/7 for timber frame dwellings

2.3 Approvals

Natural Gas

Intergas Compact HRE OV Pre-mix Condensing Open Vent Boiler

British Gas Service Listing:

Compact HRE 30 OV	G.C.N. 41-291-06
Compact HRE 24 OV	G.C.N. 41-291-05
Compact HRE 18 OV	G.C.N. 41-291-04

Notified /Body

Gastec	0063PT3576	Directive 90/396/EEC Directive 92/42/EEC

The Intergas Compact HRE OV range of central heating boilers are manufactured from high quality materials and designed for reliability and optimum performance.

Intergas is committed to the continual development of their appliances and reserves the right to make changes without notification to ensure their customers benefit from the latest advances in combustion technology and energy conservation.

2.4 Technical data

Appliance category	C13; C33; C43; C53; C63; C83
Gas supply pressure	20 mbar -G20 ; 37 mbar – G31
Gas Category	II2H3P

Technical data Compact HRE OV	18	24	30
SEDBUK Rating	A	A	A
Gas Council number	G.C. 41-291-04	G.C. 41-291-05	G.C. 41-291-06

CH				
Nom. Input rating (lower value)*	kW	5.6 – 18.7	7.1 – 23.7	7.6 – 27.0
Rated power*	kW	6.1 – 18.2	7.7 – 23.1	8.2 – 26.6
Max. CH-water pressure	Bar	3	3	3
Max. CH water temperature	°C	90	90	90

Other data				
Gas consumption (G20)	m^3/h	0.58 – 1.94	0.75 – 2.46	0.79 – 2.80
Gas consumption (G31)	m^3/h	0.22 – 0.74	0.28 – 0.94	0.30 – 1.07
Appliance pressure loss (CH)	mWk	See § 10.5	See § 10.5	See § 10.5
NOx class natural gas		5	5	5
NOx class LPG		5	4	5

Electrical data				
Mains power	V	230	230	230
Safety class	IP	IP20	IP20	IP20
Power consumption : full load	W	130	130	130
Power consumption: partial load	W	40	40	40
Power consumption: standby	W	2	2	2

Boiler dimensions and weight				
Height	mm	590	650	710
Width	mm	450	450	450
Depth	mm	240	240	240
Weight	kg	30	33	36

We have a policy for continual improvement and development, therefore we reserve the right to change specifications without prior notice.

2.5 Components

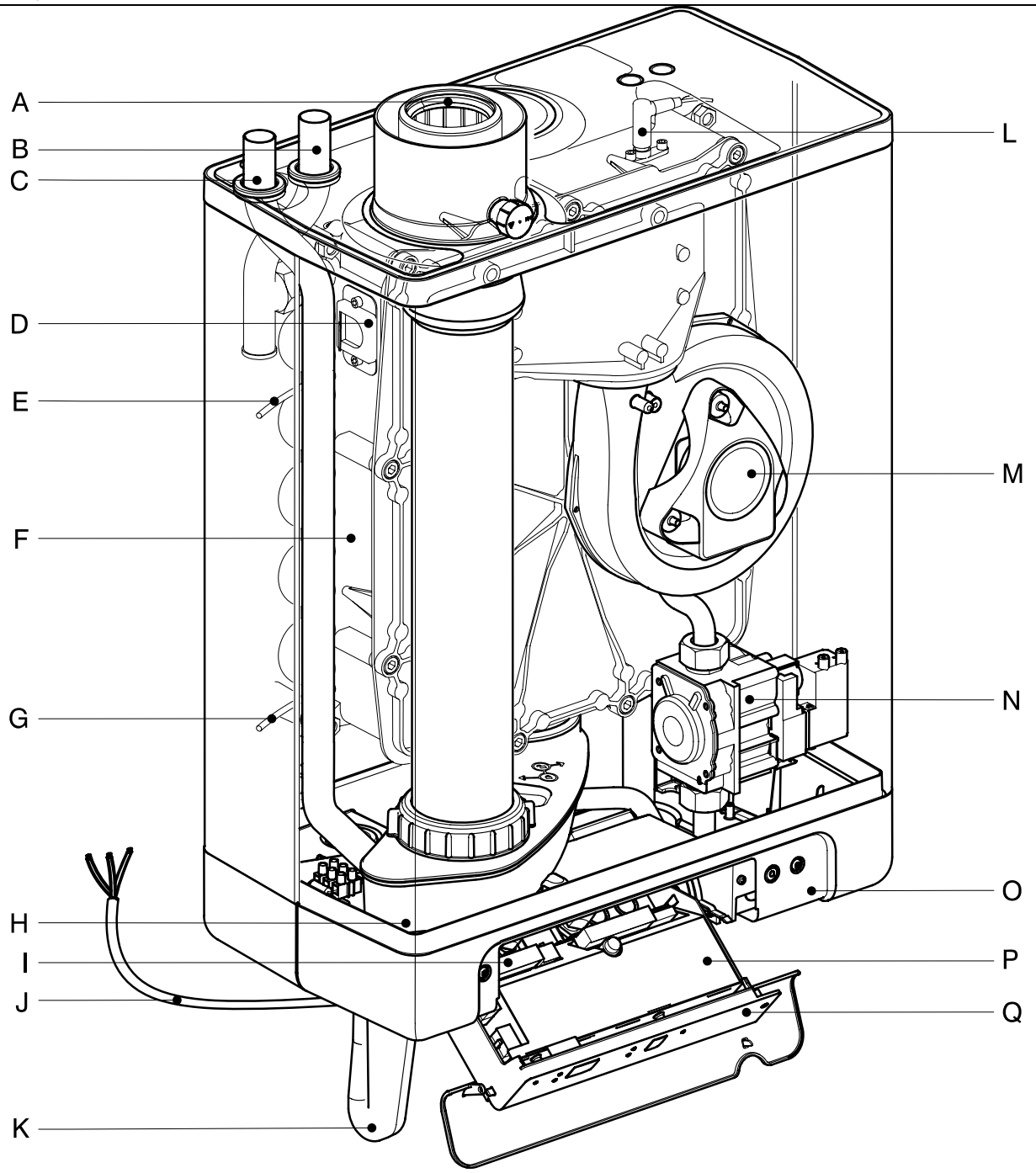

A. Flue pipe adapter
B. Flow CH
C. Return CH
D. Sight glass
E. Sensor S1
F. Heat exchanger
G. Sensor S1
H. Condensate drain pan
I. Connection block / terminal strip X4
J. Mains lead 230 V AC without plug (stripped)
K. Condensate trap
L. Ionisation / Ignition electrode
M. Fan
N. Gas valve
O. Position of data plate
P. Boiler controller
Q. Operating panel and read-out

3 GENERAL BOILER INFORMATION

3.1 General

The Intergas Compact HRE OV wall mounted, gas fired boiler is suitable for use in open vent systems with a heating system feed tank. The appliance is designed to deliver heat to the water in a CH system and when an indirectly heated domestic hot water (DHW) storage cylinder is installed, apply heat to the DHW installation.

The air supply and combustion gas flue connection is as standard prepared for a concentric 60/100 flue system. The Intergas Compact HRE OV wall mounted gas fired boiler carries the CE rating and IP20 electrical protection.

The appliance is supplied as standard for natural gas (G20). For usage of propane gas (G31) the boiler can be modifed by changing the gas metering ring. A gas conversion kit can be ordered at Intergas Heating Ltd.

Note

Modification of the boiler can only be done by a qualified competent person.

3.2 Boiler controller

An electronic control unit, consisting of a boiler controller and separate ignition module which is placed on the gas valve, provides direct burner ignition and flame supervision along with continuous modulation of the burner's gas supply.

3.3 Parameter list

All boiler adjustments are easily accessible by the parameter list in the software.

3.4 Heat transfer

Heat transfer to the boiler's heating circuit is obtained via a primary, gas to water heat exchanger within a hermetically sealed combustion chamber. A modulated speed fan blows the gas/air mixture into the combustion chamber and expels the products of combustion to outside air via an associated flue system.

3.5 Central heating system

An external pump can be connected on terminal X2/7-8, see chapter 13.

3.6 Room temperature control

Room temperature can be controlled by the use of an external room thermostat and thermostatic radiator valves.

Note

Connection of the room thermostat is dependant on the operating voltage of the thermostat.

3.7 Integrated clock

The boiler incorporates an integral clock, which allows the setting of central heating periods (See the User Instructions, 'Operation and display read-out' for details) and the boiler's control panel incorporates an LED display, which indicates the state of operation and fault defect codes. When an external controller is used the integral clock must be set onto c-on (See § 4.4).

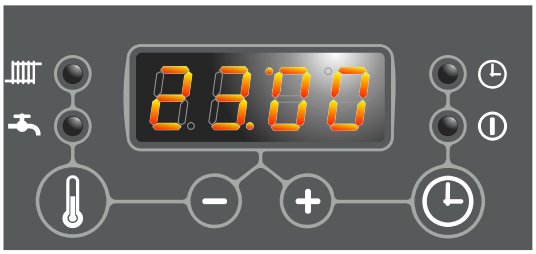

4 OPERATION

4.1 General

The Intergas Compact HRE OV wall mounted, gas fired open vent boiler is a modulating high efficiency boiler. This means that the power is adjusted in line with the desired heat requirement. It is designed to be used in an open vented system with heating system feed tank.

The appliance is equipped with an electronic boiler controller which, each time heat is requested from the heating supply, starts the fan, opens the gas valve, ignites the burner and continuously monitors and controls the flame, depending on the requested output.

4.2 Central heating mode

When a heating demand is requested (power is on, the timer and thermostat are calling for heat) the external pump is energised and the boiler will fire automatically. The hot water is now circulated around the central heating system. When the end of the central heating demand is reached (the thermostat reaches temperature or the time clock reaches the end of its set period) the burner will shut down while the pump remains functioning during a presetted period of time to dissipate any excess heat from within the boiler's heat-exchanger. After that the boiler will revert to stand-by, waiting to respond to the next heating demand.

4.3 Operating modes

A code on the service display of the operating panel indicates the appliance's operating mode.

- Off

The appliance is out of operation but is supplied with electrical power. No response occurs to calls for DHW or CH. The appliance frost protection is active. This means that the external pump operates and the exchanger is heated up if the temperature of the water present in it falls too far.

If the frost protection is actuated, code 7 is displayed (heating the exchanger).

In this operating mode the pressure in the CH installation (in Bar) can also be read on the temperature display.

Waiting mode

The LED at the ⏻ button is lit and possibly one of the LEDs for the DHW comfort function. The appliance is ready to respond to a request for CH of DHW.

0 Pump overrun of CH

After the end of CH operation the external pump continues to run. The running time is factory set at the value in accordance with § 10.3. This setting can be changed.

In addition, the pump runs automatically for 10 seconds once every 24 hours in order to prevent seizing. This automatic switching on of the pump occurs at the time of the last call for heat. To change the time, the room thermostat setting should be increased briefly at the desired time.

1 Boiler shutdown when required temperature reached

The boiler controller can temporarily shut down the request for heat. The burner is then stopped. Shutdown occurs because the requested temperature has been reached. When the temperature has fallen sufficiently and the anti cycle time has passed the shutdown is cancelled.

2 Self-test

The connected sensors are checked regularly by the boiler controller. During the check the boiler controller does not perform any other tasks.

3 Ventilation

When the appliance is started the fan is first brought to starting speed. When the starting speed has been reached the burner is lit. Code 3 is also visible when post-ventilation is taking place after the burner has stopped.

4 Ignition

When the fan has reached the starting speed, the burner is ignited by means of electrical sparks. During ignition the code 4 is visible. If the burner does not ignite, a new ignition attempt occurs after approximately 15 seconds. If after 4 ignition attempts the burner is not yet burning, the boiler controller goes into fault mode (See § 11.2).

5 CH operation

An on/off thermostat, an OpenTherm thermostat, an external sensor or a combination of the latter can be connected to the boiler controller.

When a request for heat is received from a thermostat, the fan is started (code 3), followed by ignition (code 4) and CH operating mode (code 5).

During CH operation the fan speed and hence the appliance power are controlled by the boiler controller so that the CH water temperature reaches the desired CH supply temperature.

If an on/off thermostat is connected, this is the CH supply temperature set on the display. In the case of an OpenTherm thermostat the desired CH supply temperature is determined by the thermostat. In the case of an external sensor the desired CH suppply temperature is determined by the heating line programmed in the boiler controller. For the latter two, however, the maximum is the temperature set on the display.

During CH operation the requested CH supply temperature is indicated on the operating panel.

The CH supply temperature can be set between 30°C and 90°C.

4.4 Clock function

The boiler is equipped with a digital clock and offers the possibility to program 4 points in time to switch from CH off or CH on.
During the “clock active” periods the boiler will respond on CH demands from the room thermostat. During the “clock inactive” periods the boiler will not respond on CH demands.
When an external controller is used the internal clock must be set onto c-on.

Additionally the following special modes can be chosen:

1. t-on (temporary on).
   The boiler will respond to every CH demand from the room thermostat until the next switch moment.
2. c-on (continuous on).
   The boiler will respond to every CH demand from the room thermostat without any time limit.
3. OFF.
   The boiler will not respond to any CH demand from the room thermostat.

Note
For setting and adjusting the clock see § 9.3 Setting and adjusting the clock functions.

4.5 PC interface

The boiler controller is equipped with an interface for a PC, which can be connected by means of a special cable and associated Intergas Diagnostic Software (IDS). This facility allows the behaviour of the boiler controller, the appliance and the heating installation to be monitored over a longer period.

4.6 Test programs

The boiler controller has a facility for placing the appliance in test mode. Activation of a test program will result in the appliance starting operation at a fixed fan speed, without the control functions being actuated. The safety functions do remain active. The test program is ended by pressing the + and − simultaneously or will end automaticaly after 10 minutes.

Test programs

Program description	Button combinations	Display reading
Burner on at minimum power	🔧 and −	“L”
Burner on with maximum CH power setting (See § 11.3, parameter 3)	🔧 and + (1x)	“h”
Burner on with maximum DHW power (See§ 11.3, parameter 4)	🔧 and + (2x)	"H"
Switch off test program	+ and −	Actual situation

4.7 Frost protection

FROST PROTECTION

To prevent freezing the appliance is equipped with an internal frost protection. If the heat exchanger temperature falls too low, the burner switches on and the external pump runs until the heat exchanger temperature is sufficient. When the appliance frost protection is activated the symbol code 7 is displayed (pre heating the heat exchanger).

If the installation (or a part of it) is in danger of freezing, an (external) frost thermostat must be fitted to the return line at the coldest location. This must be connected in accordance with the wiring diagram (See § 8.2.1).

Note

If the appliance is out of operation (- on the service display) the appliance 's internal frost protection is still active. However, this means there will be no response to a request for heat from an (external) frost thermostat.

5 INSTALLER HANDY HINTS

- The installer shall instruct the user on the operation of the boiler and safety devices contained within the boiler. The installer should then hand over the instructions indicating the included Benchmark Commissioning Checklist that has been completed.
- The user should be instructed to keep the instructions in a safe place for servicing and future reference.
- It is important to keep the boiler clear of dust during the installation. In particular, do not allow debris to enter the flue connection at the top.
- Before fitting the boiler ensure that the pipe work that you are installing is connected to the appropriate connections on the boiler.
- It is important to thoroughly flush the water circuits, after isolating the boiler, in order to remove any fluxes and debris from them. This should be done particularly where boilers are being fitted to existing radiator circuits (Refer to BS 7593:2006 for the details to clean DHW and Central heating system).
- This boiler has been factory set but adjustment may be required to the heating input in order to match the individual heating demand. This can be done by changing parameter 3 (= max. power CH).
- When commissioning the boiler check the gas inlet pressure is 20mbar (NG) or 37mbar for Propane.
- Make sure that your instruments are calibrated regularly.
- Note: an anti-cycle delay time can be set up to a maximum of 15 minutes by adjusting parameter P as described in § 10.3.
- If you experience any problems please refer to the installation and commissioning guidelines within the boiler instruction manual. If necessary, please contact Intergas Heating Ltd (See § 1.8).

Remember it is a requirement to complete the Benchmark code of practice logbook before leaving the installation. You are also required to register the boiler through the Gas Safe registration scheme.

6 ACCESSORIES

Description	Article number	
Pipe cover set (incl. mounting material)	093217	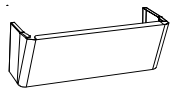
Outside sensor	203207	
DHW storage cylinder sensor	065117	
Diverter valve 230 V	092647	
Concentric connection Ø80x125 • Concentric flue adapter • Sealing cap	090557	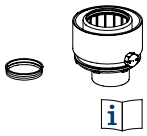
Bend 45°	084661	
Bend 90°	084660	
Deflector kit	082976	
Weather slate (steep roof)	087910	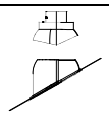
Weather slate (flat roof)	087372	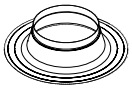
Extension L = 100 incl. wall bracket	082975	
Horizontal telescopic offset wall terminal	081280	
Horizontal telescopic wall terminal	081281	
Vertical roof terminal	086842	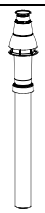
Plume management kit	082974	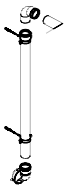
Elbow 90° (for plume management kit)	081284	

Elbow 60° (for plume management kit)	081285		
Extension L = 100 incl. wall bracket (for plume management kit)	081286		

7 INSTALLATION

7.1 Overall dimensions

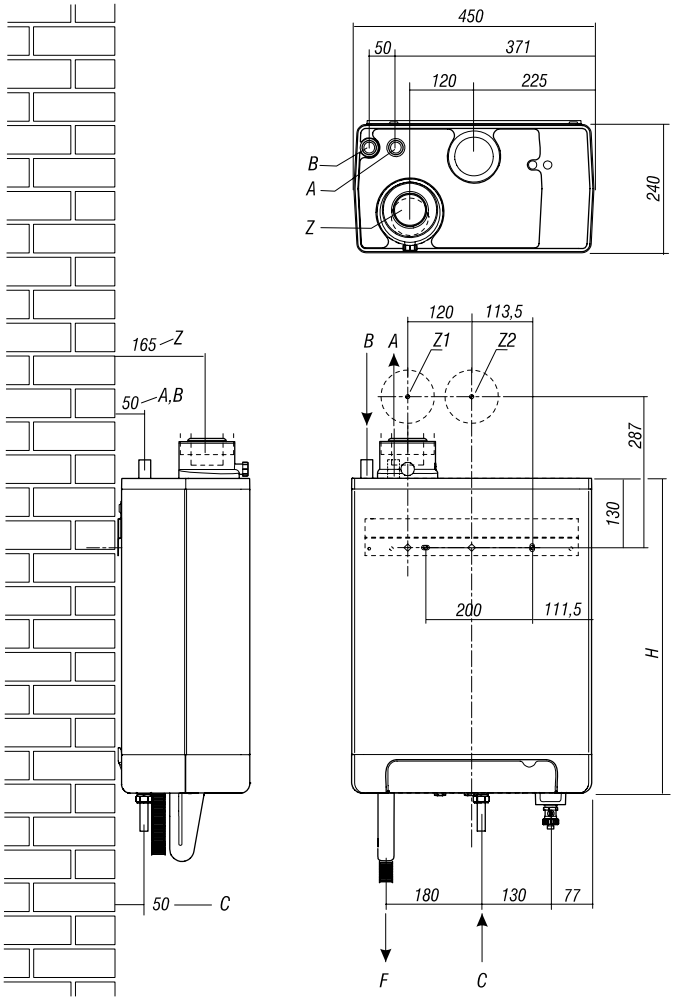

A =	Supply CH	Ø22
B =	Return CH	Ø22
C =	Gas	½”
F =	Condensate drain	Ø25 (flexible)
G =	Drain PRV	Ø15
H =	840	Compact HRE OV 30
H =	780	Compact HRE OV 24
H =	720	Compact HRE OV 18
Z1=	Standard flue pipe	Ø60/100 (concentric)
Z2=	Standard off-set flue pipe	Ø60/100 (concentric)

7.2 Installation location

- If the boiler is to be installed in any room or compartment, it does not require any purpose made ventilation for combustion air. If sited in a room containing a bath or shower then particular reference is drawn to the current I.E.E. Wiring Regulations, local Building Regulations or any other local regulations currently in service.
- The boiler is not suitable for external installation unless protected by a purpose made building such as a boiler house.
- The following clearances are recommended for installation purposes: 200mm above, 300mm below and 10mm at each side. 500mm is required at the front but this may be realized by opening a cupboard door.
- Flammable fluids and materials must be stored at least 1m away from the boiler wall on which the boiler is mounted and must be sufficiently strong to support the weight of the boiler.

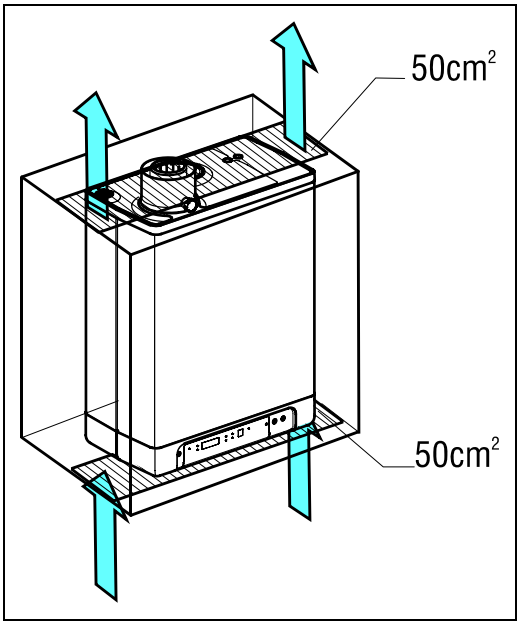

7.2.1 Installing in a kitchen cupboard

The appliance can be installed between two kitchen cabinets or in a cabinet. Ensure sufficient ventilation at top and bottom. When installed in a cabinet, ventilation openings of at least 50 cm^2 must be created at the top and bottom of the appliance to ensure free flow of air.

7.2.2 Removing cover plate and front panel

For various work on the appliance the cover plate and front panel should be removed from the appliance. Proceed as follows:

- If cover plate (A), is used, remove to the front.
- Unscrew the two screws (1) behind the appliance display window.
- Pull the bottom of the front panel (2) forwards.

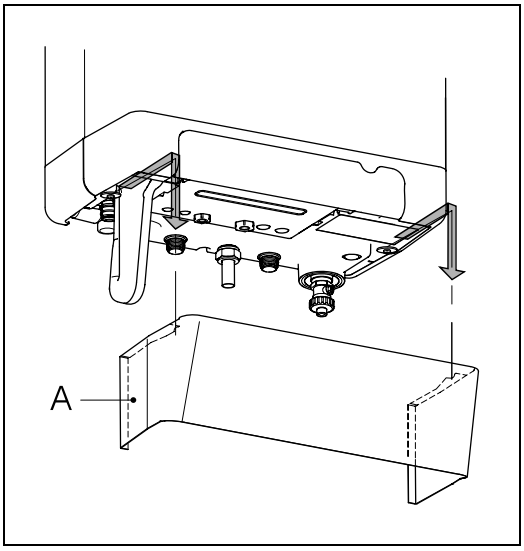

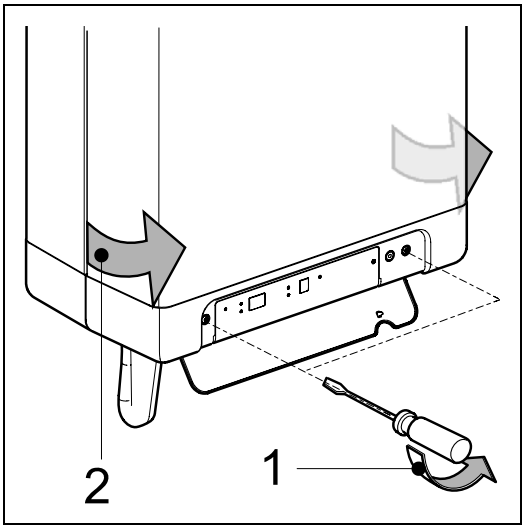

7.3 Installing the appliance

1. Unpack the appliance.
2. Check the contents of the packaging. It consists of:
   - Appliance (A)
   - Wall mounting strip (B)
   - Condensate trap (C)
   - Pressure fitting 22 mm (2 pcs)
   - Installation instructions
   - Operating instructions
   - Warranty card
3. Check the appliance for possible damage: report damage immediately to the supplier.
4. Fit the appliance, sliding it downwards on the wall mounting strip.
5. Connect the flue and return pipe to the installation using the enclosed compression fittings 22 mm.
6. Connect the gasvalve to the gaspipe.
7. Fit the flexible tube to the condensate trap outlet.
8. Fill the condensate trap with water and slide it as far as possible upwards on to the condensate drain connector below the appliance.
9. Connect the flexible tube from the condensate trap (where applicable together with the overflow pipe from the inlet assembly and the pressure relief valve) to the drain via an open connection.
10. Fit the flue.

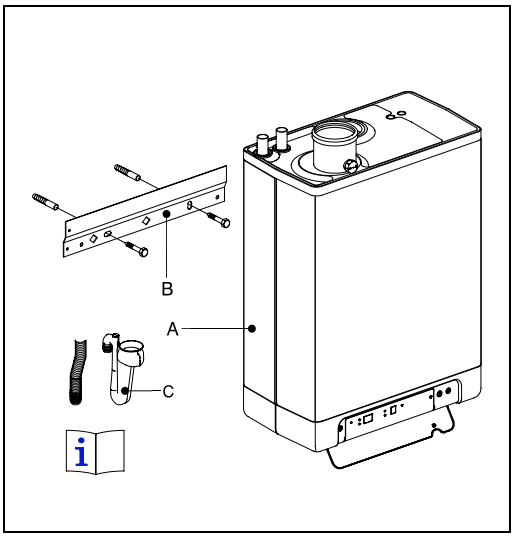

CAUTION

Always fill the condensate trap with water and place it on the boiler before powering up the boiler.

Not placing or filling up the condensate trap may cause flue gases to come into the installation room and can lead to dangerous situations!

In order to place the condensate trap the front cover must be pulled forward or removed entirely.

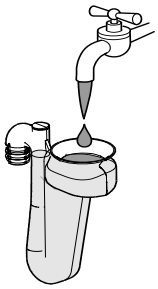

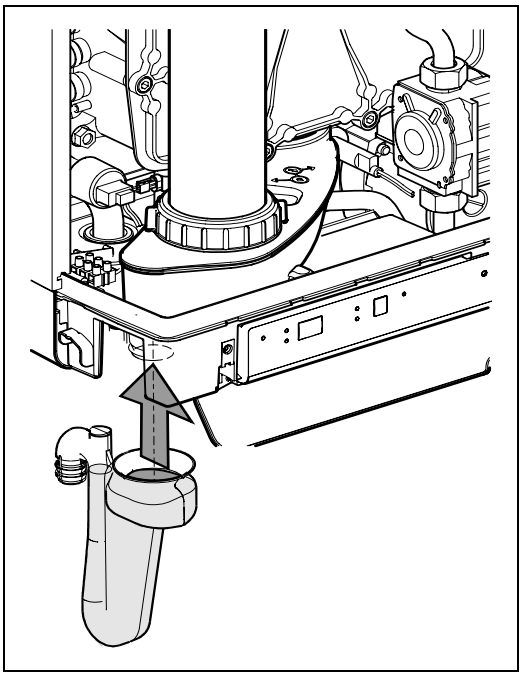

Note

It is recommended that any external condensate pipe is insulated and increased to 32mm diameter in order to prevent the condensate from freezing.

7.3.1 Fitting the cover plate

Hang the flanged upper edge of the cover plate on the washers under the base of the appliance and slide the cover plate as far as possible towards the rear.

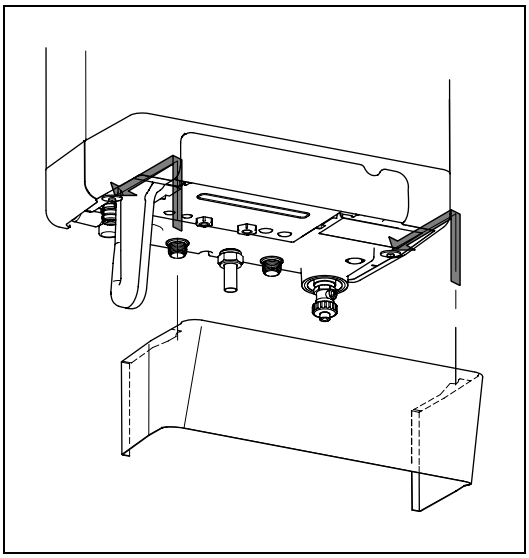

8 CONNECTION

8.1 Connecting CH installation

1. Flush the CH system thoroughly to clean.
2. Connect the flue and return pipe to the installation using the enclosed press fittings 22 mm.
3. All pipes must be fitted unstressed in order to prevent the pipes from ticking. Make sure the compression fittings are thightened thoroughly to prevent leakage.

CAUTION

Under no circumstances is it allowed to connect the flow and return of the boiler to the installation by means of a soldered connection.

Always use the enclosed compression fittings !

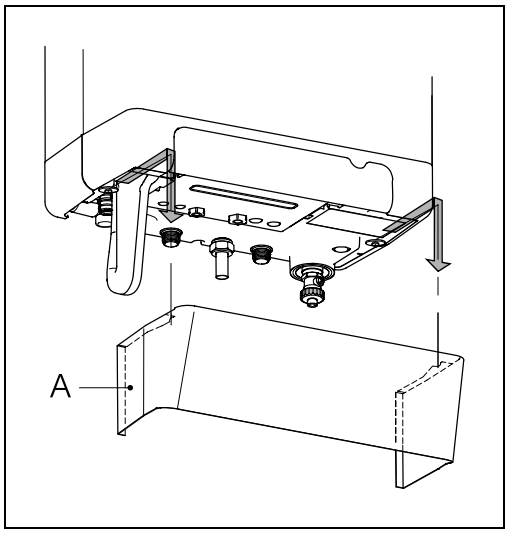

8.1.1 The CH system should be equipped with:

- A drain tap at the lowest point(s) of the installation.
- A heating system feed tank.

8.1.2 Thermostatic radiator valves

If all radiators are equipped with thermostatic or radiator valves, an auto bypass must be fitted in order to guarantee minimum water circulation. The auto bypass must be at a distance of at least 20 ft from the appliance in order to prevent overheating of the appliance.

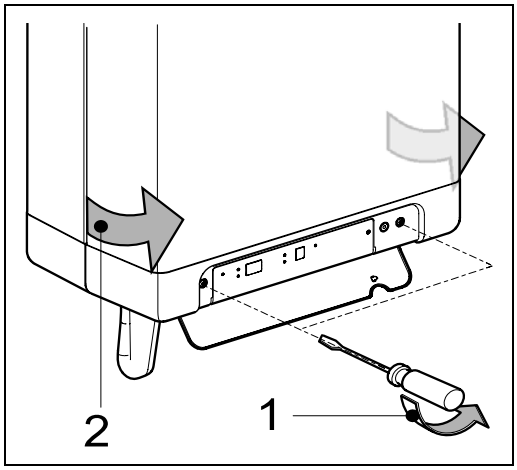

8.2 Electrical connection

CAUTION

The electrical supply must be connected via an 3 amp fused spur.

For installation in damp rooms a fixed connection is obligatory.

When working on the electrical circuit always isolate the electric supply.

1. Slide the cover plate (A) (if present) to the front to remove.
2. Open the display cover and unscrew both screws to remove the front cover.
3. Pull the boiler controller unit forwards; the boiler controller will tip downwards to provide access.
4. Consult sections § 8.3.1 and chapter 13 for making the connections.
5. After making the desired connections plug the appliance into an earthed wall socket.

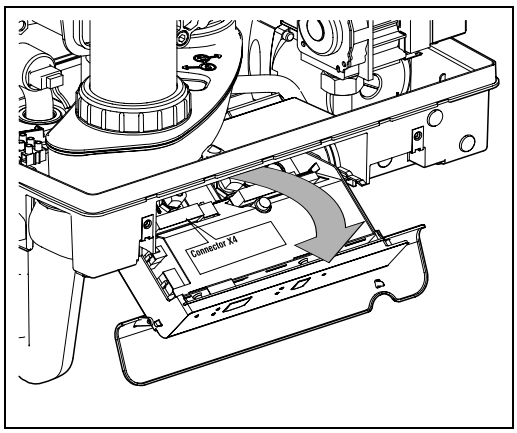

8.2.1 Electrical connections

Temperature control	Connector X4	Notes
Room thermostat	6 – 7	Voltage free
Outside temperature sensor	8 – 9	-
Frost protection thermostat	6 – 7	Parallel to room thermostat
Power supply 24 V DC	6 – 7 – 9	6 = 24 V DC 7 = room thermostat 9 = 0 V DC
Open Therm (OT)	11 – 12	

Temperature control	Connector X2	Notes
Room thermostat 230 V	1 – 3	Remove linking 6 – 7
Frost thermostat 230 V	1 – 3	-

Switch live from S-plan or Y-plan onto connector X2, no.1.

8.2.2 On / off room thermostat

1. Connect the room thermostat.
2. Adjust the feedback resistance of the room thermostat to 0.1 A. In case of doubt measure the current and adjust this accordingly. The allowed maximum electrical resistance of the room thermostat and wiring is 15 Ohm.

8.2.3 Timer - room thermostat

A 3VA-24DC power supply is available for a room thermostat. Connect the timer room thermostat according to § 8.3.1.

8.2.4 Outside temperature sensor

The appliance is equipped with a connection for an outside temperature sensor. The outside temperature sensor can be used in combination with an on/off room thermostat or an OpenTherm thermostat.

Connect the outside temperature sensor (See § 8.3.1).

For the heating line setting, see weather-dependent regulation (See § 10.6).

8.3 Gas connection

1. Fit the connection from the gas directly into the 22 mm connection at the mounting bracket.
2. Connect the appliance to the gas supply.
3. Check the gas carrying parts for leakage at a maximum pressure of 500 mm H_2O.

8.3.1 Low voltage room thermostat

To be connected to contacts 6 and 7 of connector X4.
This is a 24 volt connection and no mains power must be applied to these terminals.
See electrical diagram, page 38.

Note
When a 24 volt thermostat is connected to contacts 6 and 7, the loop in 6 – 7 must be removed.

8.3.2 230 volt room thermostat

To be connected to contacts 1 and 3 of connector X2 and remove link 6-7.
See electrical diagram.

Warning High Voltage

Isolate the appliance from the electrical supply before connecting the thermostat.

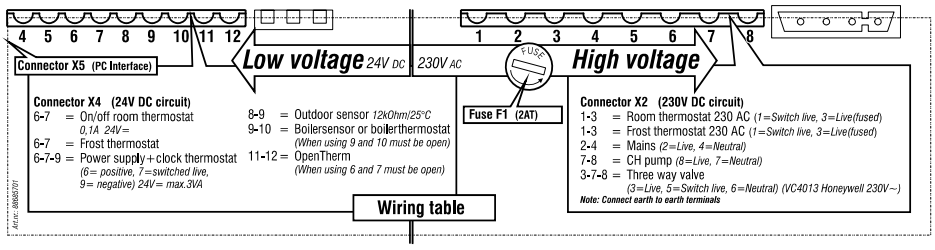

8.4 Flue system

8.4.1 Flue pipe and air supply

The boiler utilises a concentric flue arrangement, which consists of a 60 mm-diameter inner flue and 100 mm-diameter outer air inlet duct, which comes in either horizontal or vertical arrangements.

Note

Only use approved Intergas flue products with this boiler, which can be sourced from the supplier of your boiler or Intergas stockist. For C63 flue types all CE approved flue terminals can be used.

The standard horizontal flue pipe is not supplied with the boiler and should be purchased separately from your supplier. This flue may be routed to the rear, left or right of the appliance by means of the 90^0 degree bend, which is supplied in the flue kit.

8.4.2 Flue pipe position

	Terminal Position	Min. distance
A	Directly below an open able window or other opening e.g. air brick	300 mm
B	Below gutters, soil pipes or drain pipes	75 mm
C	Below eaves	200 mm
D	Below balconies or car front roofs	200 mm
E	From vertical drain pipes and soil pip	150 mm
F	From internal or external corners	300 mm
G	Above ground, roof or balcony level	300 mm
H	From a surface facing a terminal	600 mm
I	From a terminal discharging towards another terminal	1200 mm
J	From an opening in a car port (e.g. door, window) into a dwelling	1200 mm
K	Vertically from a terminal on the same wall	1500 mm
L	Horizontally from a terminal on the same wall	300 mm
M	Above an opening, air brick, opening windows, etc.	300 mm
N	Horizontally to an opening, air brick, opening windows, etc.	300 mm
P	Above roof level (to base of terminal)	300 mm
Q	From adjacent wall to flue	300 mm
R	From an adjacent opening window	1000 mm
S	From another roof terminal	600 mm
-	From an external boundary. Note: if the terminal is facing a boundary it is recommended that an anti-plume kit be fitted	600 mm
T T1 T2	Terminals adjacent to windows or openings on pitched and flat roofs: The flue should not penetrate this area	 2000 mm 600 mm

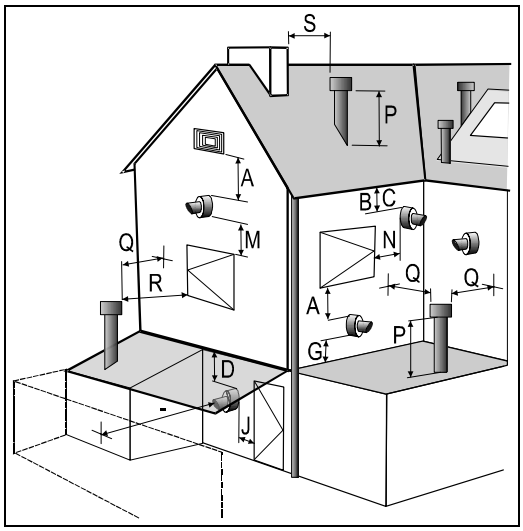

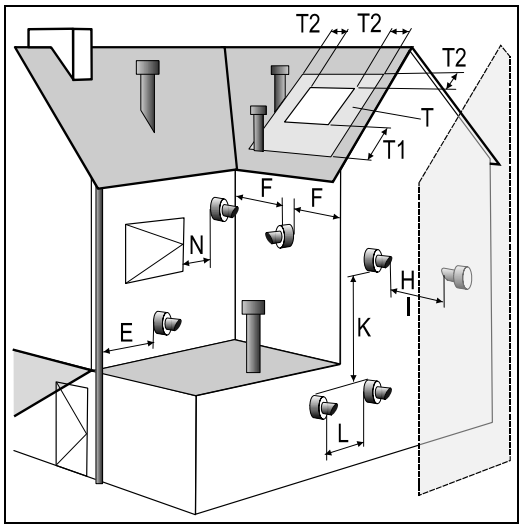

Note

Intergas cannot be held responsible for atmosferic conditions when siting flue terminals.

8.4.3 Horizontal flue system

The 60/100 mm horizontal flue system may be extended up to a maximum of 15 metres. For every bend used the following flue length reductions apply: - 45° bend = 1 metre and for a 90° bend this is 1,5 metres.

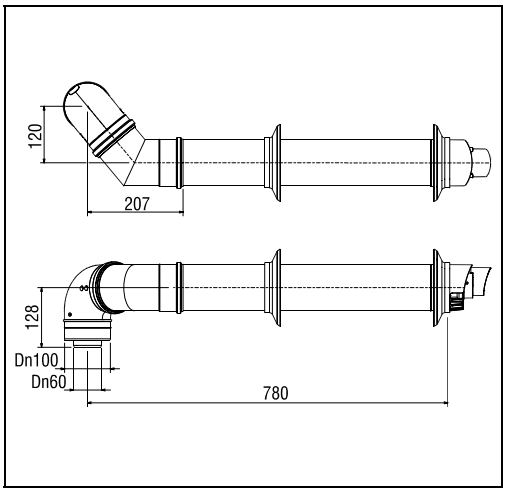

CAUTION

Only an Intergas approved flue is to be used with this product.

Failure to comply with this requirement will invalidate your guarantee and may lead to a dangerous situation!

8.4.4 Vertical flue system

A vertical 60/100 mm flue kit is also available, which can be extended up to a maximum of 15 metres, excluding the initial boiler connection, using additional components available from the supplier of your boiler or Intergas stockist.

Please note that the terminal is suitable for a flat or pitched roof and only approved Intergas flue products can be used with this boiler. The connection of the vertical flue system is similar to the horizontal flue connection.

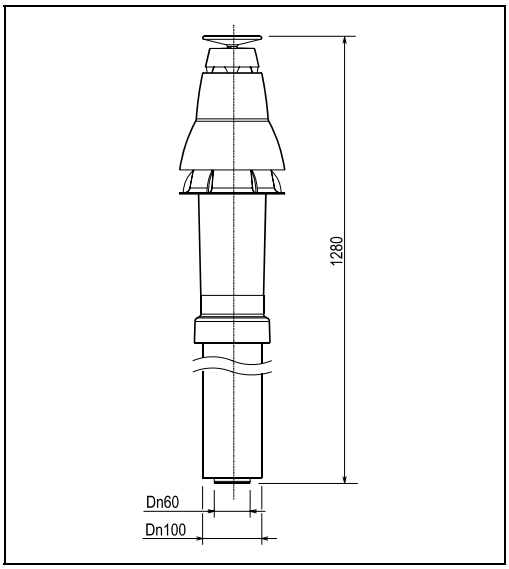

8.4.5 Anti-plume kit

The anti-plume kit comprises of a 710 mm horizontal section with elbow to connect the 1m vertical condensing tube, which has a horizontal or vertical terminal dependant on your requirements. The maximum length of horizontal flue including the terminal but excluding the initial elbow from the boiler and 1 metre vertical condensing tube is 8 metre.

Note

For each additional 90º elbow used the maximum flue length must be reduced by 1.5 metre, whilst the use of 2 x 45º bends warrants a reduction of 2 metre.

CAUTION

- Sealing rings should only be moisturized with water before use. Do not use soap or other detergents.
- When installing flues in voids make sure they are connected and fixed correctly. If in an existing situation a visual inspection is not possible the boiler must not be commissioned and remain disconnected from the gas supply untill suitable access has been realised.
- Make sure to follow the manufacturer's instructions regarding maximum length of the flue system, the appropriate flue material, correct jointing methods and the maximum distance between flue support.
- Ensure that all joints and seams are gastight and watertight.
- Ensure the flue system has a uniform gradient back to the boiler and other drain points throughout its length, so that condensate can be adequately disposed of.

9 COMMISSIONING THE APPLIANCE

At the time of commissioning, complete all relevant sections of the Benchmark Checklist located on page 41 of this document.

9.1 Filling and venting the appliance and the installation

9.1.1 CH system

CAUTION

If an additive is added to the CH water, ensure it is suitable for the materials used in the appliance, such as copper, brass, stainless steel, steel, plastic and rubber.

1. Connect to 3 amp fused spur or an unswitched socket with 3 amp fuse.
2. Fill the heating system feed tank and system.
3. Bleed the air in the installation with the manual bleed screws on the radiators.
4. Connect the appliance to mains.

   The appliance may perform a self test: 2 (on service display).

   The appliance will then go into wait mode: - (on service display).
5. Check all couplings for leakage.
6. Fill the condensate trap with water.

9.1.2 Gas supply

1. Vent the gas supply with the pre-pressure measurement nipple (D) on the gas valve.
2. Check the connections for leaks.
3. Check the input and standing pressure (D).

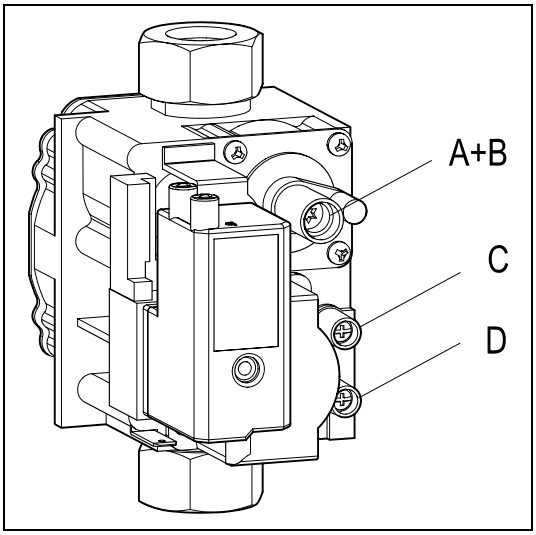

9.1.3 Combustion

The combustion for this appliance has been checked, adjusted and preset at the factory for operation on the gas type defined on the appliance data plate. Although the combustion is factory set please check the combustion as required by the Benchmark Guidelines. If adjustment is necessary please refer to page 32. Do not adjust the air/gas ratio valve. Having checked:

- That the boiler has been installed in accordance with these instructions;
- The integrity of the flue system and the flue seal, as described in § 8.5 and the British Standards codes of practices, specifically BS 5440;
- The integrity of the boiler combustion circuit and the relevant seals, as descibed in §12.3 eg with a flue spillage mirror;

  proceed to put the boiler into operation as follows:

1. Set up the boiler to operate at maximum rate as described in § 9.2.
2. With the boiler operating in the maximum rate condition check that the operational (working) gas pressure at the gas sampling point (D) complies with the requirements of § 10.7.2.
3. Ensure that this inlet pressure can be obtained with all other gas appliances in the property working.

9.1.4 Flue system

The flue system must be connected correctly to the appliance in accordance with the manufacturer's instructions. The flue termination should also be checked. Where suitable access for a visual inspection of an existing flue system has not been provided the appliance must not be commissioned and it must be disconnected from the gas supply.

9.2 Commissioning the appliance

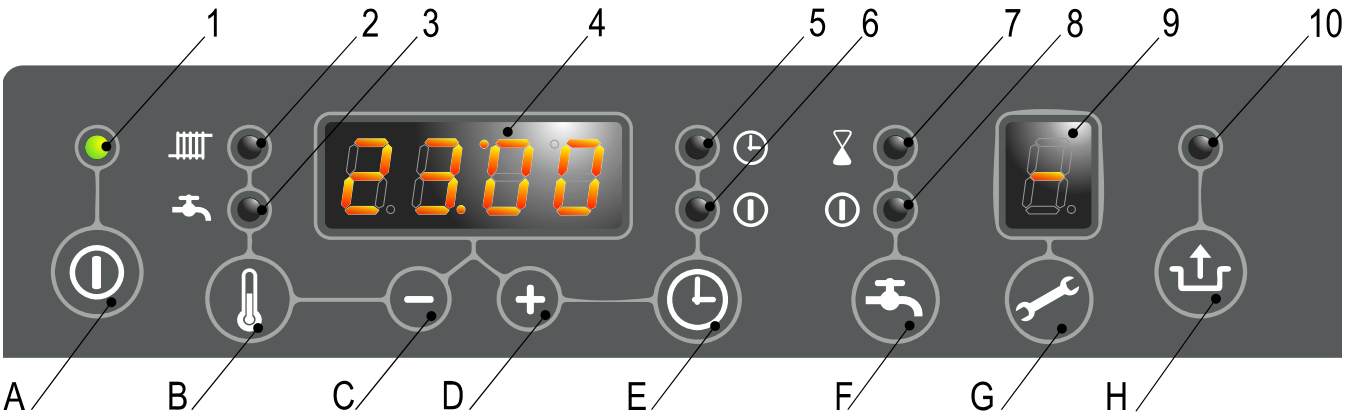

	Read-out
1	On / off
2	CH operation or setting maximum CH temperature
3	DHW operation or setting DHW temperature (not applicable for Compact HRE OV)
4	Desired temperature of CH or DHW in °C / Fault code/ Time
5	Clock “on” CH enabled
6	Clock “off” CH disabled
7	DHW comfort function eco (not applicable for Compact HRE OV)
8	DHW comfort function on (continuous) (not applicable for Compact HRE OV)
9	Operating code
10	Flashes to indicate fault

	Operation
A	On / Off button
B	DHW / CH button, for setting desired temperature
C	- button
D	+ button
E	Clock function setting
F	DHW comfort function off/eco/on (not applicable for Compact HRE OV)
G	Service button
H	Reset button

Once the preceding actions have been carried out, the appliance may be started up.

1. Press the button , to start the appliance.
   When an indirectly heated DHW storage cylinder is connected the storage cylinder is heated up and the service display will show 3, 4 and 6 (depending on the status of the DHW disabling switch and/or Open Therm regulation).
2. Adjust the pump setting depending on the maximum power set and the resistance in the CH installation. For the water head of the pump and the pressure loss of the appliance see § 10.5.
3. Set the room thermostat higher than the room temperature. The appliance will now switch to CH operation: 5 will show on the display.
4. Heat the installation and the appliance to approximately 80°C.
5. Check the temperature difference between the supply and return for the appliance and the radiators. This must be approximately 20°C. For this purpose set the maximum power on the service panel. See setting maximum power. If necessary adjust the pump setting and/or the radiator valves. For the minimum flow see § 10.5.
6. Switch the appliance off.
7. Bleed the appliance and the installation after cooling.
8. Check correct operation of the heating and hot water supply.
9. Instruct the user on filling, bleeding and the operation of the clock, heating and hot water supply. For setting the clock see § 9.3.

Notes

- *The appliance is equipped with an electronic boiler controller, which ignites the burner and continuously monitors the flame during each request for heat from the heating or from the hot water supply.*

9.3 Setting and adjusting the clock functions

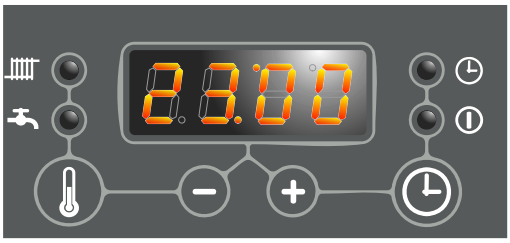

9.3.1 Setting the clock

- Press the button for less than 1 second and repeat this untill ''Clock'' appears.
  For adjusting the clock to the correct time press the [+] or [-] button.
  Note: Holding the button for more than 1 second will make the clock run fast.

9.3.2 Setting the timerfunction

- On pressing the button for more than 2 seconds in the displays [06:00] and [1] will appear.
  Now 2 periodes can be adjusted in which the CH is active. Pressing the button again will change between the different switching moments.
  Display : [06:00] and [1] → Start first period CH active.
  [09:00] and [2] → End first period CH active.
  [16:00] and [3] → Start second period CH active.
  [22:00] and [4] → End second period CH active.
- By pressing the button the new times will be stored in the boiler controller.
  In the display appears [P] for a short period.

- When the clock is in period [1] or [3] (CH active) the LED is on.
- When the clock is in period [2] or [4] (CH not active) the LED is on.

- By pressing the button over 5 seconds the default setting for the switch moments will be restored.
  In the display "F-set" appears.

- By pressing the button the boiler controller will return to the normal situation without storing any changes.

9.4 Additional functions

- Pressing the button for less than 1 second the following additional functions can be activated:
  10. t-on (temporary on).
      The boiler will respond on every CH demand from the room thermostat until the next switch moment.
  11. c-on (continuous on).
      The boiler will respond on every CH demand from the room thermostat without any time limit.
  12. OFF
      The boiler will not respond on any CH demand from the room thermostat.

9.5 Shutting down

CAUTION

Drain the appliance and the installation if mains power has been interrupted and there is a possibility of freezing.

1. Drain the appliance at the drain tap.
2. Drain the installation at the lowest point.

9.5.1 Frost protection

- To avoid freezing of the condensate drain pipe the appliance must be installed in a frost-free area.
- To avoid freezing of the appliance it is equipped with frost protection. If the temperature of the heat exchanger becomes too low, the burner switches on until the temperature of the heat exchanger is sufficient. If there is a possibility of the installation (or part of it) freezing, an (external) frost thermostat must be installed at the coldest point of the return pipe. This must be connected in accordance with the wiring diagram (See chapter 13).

Note

If an (external) frost thermostat has been fittted to the installation and connected to the appliance, this will not be active when the appliance is switched off at the operating panel (- on service display).

10 SETTING AND ADJUSTMENT

The functioning of the appliance is determined primarily by the (parameter) settings in the boiler controller. Part of this can be set directly via the operating panel; another part can only be adjusted using the installer code.

10.1 Directly via the operating panel

The following functions can be operated directly:

10.1.1 Appliance on/off

The appliance is started using the ⏻ key.

When the appliance is in operation the green LED above the ⏻ key will light up. When the appliance is off a singe dash lights up on the service display (-) to indicate that supply voltage is present. In this mode the pressure in the CH installation (in bar) can also be read on the temperature display.

10.1.2 Resetting

When a lock-out is indicated by means of a flashing LED above the key and a code on the temeperature display, the appliance can be restarted by pressing the key. Check the nature of the fault on the basis of the fault codes in § 11.1 and resolve the cause of the fault if possible before resetting the appliance.

10.1.3 Changing the settings of the various functions:

Holding the key pressed in for 2 seconds takes you to the user settings menu(LED at and the figure display start to flash). Pressing the key repeatedly results in a different function LED flashing each time. When the LED is flashing the indicated function can be set with the + and − key . The value set is shown on the display.

The ⏻ on/off key closes the settings menu without storing the changes.

The reset key closes the settings menu and the changes are stored.

If no key is pressed during a period of 30 seconds, the settings menu is closed automatically and the changes are stored.

10.1.4 Maximum CH supply temperature

Press the key until the LED at starts to flash.

With the + and − key s set the temperature between 30°C and 90°C (default value 80°C).

10.2 Setting via the service code

The boiler controller in the appliance is factory set in accordance with the parameters.

These parameters can only be changed using the service code. Proceed as follows to activate the program memory:

1. Press the 🔧 and ⇧ keys simultaneously until a [0] appears on the service- and temperature display.
2. Using the + and − keys set [15] (service code) on the temperature display.
3. Using the 🔧 key set the parameter to be set on the service display.
4. Using the + and − keys set the parameter to the desired value (visible) on the temperature display.
5. Once all desired changes have been entered, press the ⇧ key until a [P] appears on the service display.

The boiler controller has now been reprogrammed.

- Pressing the ⓘ key in takes you out of the menu without storing the parameter changes.
- By pressing the 🔧 button over 5 seconds the default setting for the parameters will be restored. In the display "F-set" appears.

10.3 Parameters

Para-meter	Setting	Compact HRE OV Factory settings			Description
		18 OV	24 OV	30 OV	
0	Service code [15]			-	Access to installer settings The service code must be entered (= 15)
1	Installation type	3	3	3	0 = Combi (not applicable for HRE OV) 1 = Heating only + external DHW cylinder 2 = DHW only (not applicable for HRE OV) 3 = Heating only
2	CH pump continuous	0	0	0	0 = post purge period only 1 = pump continuously active 2 = pump continuously active with MIT switch 3 = pump on with external switch
3	Maximum CH power set	85	85	85	Adjustment range of set value parameter c up to 85%
4	Maximum DHW power set	85	85	85	Adjustment range of set value parameter d up to 85%
5	Min. supply temperature of the heat curve	25	25	25	Adjustment range 10°C to 25°C
6	Min. outside temperature of the heat curve	-7	-7	-7	Adjustment range -9°C to 10°C
7	Max. outside temperature of the heat curve	25	25	25	Adjustment range 15°C to 30°C
8	CH pump post purge period	1	1	1	Adjustment range 0 to 15 minutes
9	CH pump post purge period after DHW operation	1	1	1	Adjustment range 0 to 15 minutes
B	Booster	0	0	0	N.a.
C	Step modulation	1	1	1	0 = step modulation off during CH operation 1 = step modulation on during CH operation
C	Minimal CH rpm	30	30	30	Adjustment range 25 to 50 % (40 = propane)
D	Minimal DHW rpm	30	30	30	Adjustment range 25 to 50% (40 = propane)
E	Min. Supply temperature during OT demand (OT = OpenTherm thermostat)	40	40	40	Adjustment range 10°C to 60°C
E .	OT response	1	1	1	0 = ignore OT if < E 1 = limit OT if < E 2 = OT on-off
F	Start rpm CH	70	70	70	Adjustment range 50 to 99% of the set maximum rpm
F .	Start rpm DHW	70	70	70	Adjustment range 50 to 99% of the set maximum rpm
H	Max. fan rpm	45	43	48	Adjustment range 46 to 50 (46 = 4600rpm, 50 = 5000rpm) with this parameter the maximum rpm can be set
N	Set point CH (flow temperature) during heating external DHW cylinder	85	85	85	Adjustment range 60°C to 90°C
O	Waiting time after a DHW demand before a CH demand is answered	0	0	0	Adjustment range 0 to 15 minutes
P	Anti-cycling period during CH operation	5	5	5	Minimal switch-off time in CH operation Adjustable from 0 to 15 minutes

10.4 Setting maximum CH power

The maximum CH power is set at 70% in the factory. If more or less power is necessary for the CH installation, the maximum CH power can be changed by changing the fan rpm. See table Setting CH power.

This table shows the relationship between the fan rpm and the appliance power.

Setting CH power

Desired CH power (in kW approx.)			Setting on service display (in % of max. rpm)
18 OV	24 OV	30 OV	
18.2	23.1	26.8	max. (± 85%)
17.2	21.9	25.8	80
15.1	19.1	22.6	70
12.9	16.4	19.4	60
10.8	13.7	16.1	50
8.6	10.9	12.9	40
6.5	8.2	9.7	30
5.4	6.8	8.1	25

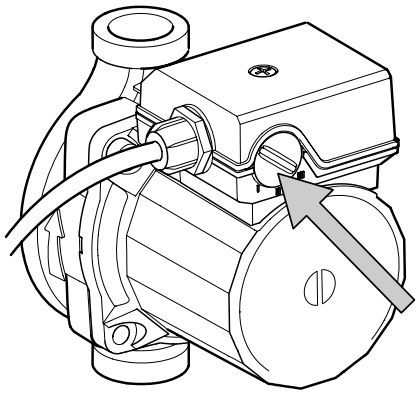

Note

The power during burning is increased slowly and is reduced as soon as the set supply temperature is reached (modulate on T flow).

10.5 Adjusting pump setting

If an external pump is used, dependend on the type used the pump setting can be adjusted. Consult the manual of the external pump for advice.

Check the temperature difference between the appliance supply and return: this must be approximately 20°C.

The minimum flow quantity	Power setting
155 l/h	5,4 kW
510 l/h	17,8 kW
650 l/h	22,8 kW
750 l/h	26,3 kW

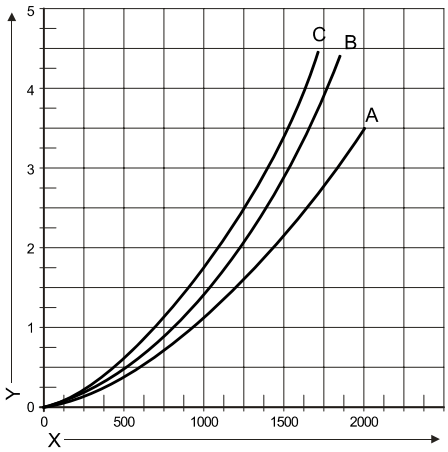

Appliance pressure loss graph, CH side

A. Compact HRE 18 OV
B. Compact HRE 24 OV
C. Compact HRE 30 OV
X Flow in l/h
Y Pressure loss / water head in mH_2O

10.6 Weather– compensation adjustment

When an external sensor is connected the supply temperature is adjusted automatically depending on the outside temperature, in accordance with the heating line set.

The maximum supply temperature (Tmax) is set via the temperature display. If desired, the heating line can be changed in the parameter list. See § 10.3.

Heating line graph

X. Outside T in °C
Y. Supply T in °C
A. Factory setting
(Tmax CH = 80°C, Tmin CH = 25°C, Tmin out = -7°C, Tmax out = 25°C)
B. Example
(Tmax CH = 60°C, Tmin CH = 25°C, Tmin out = -7°C, Tmax out = 25°C)

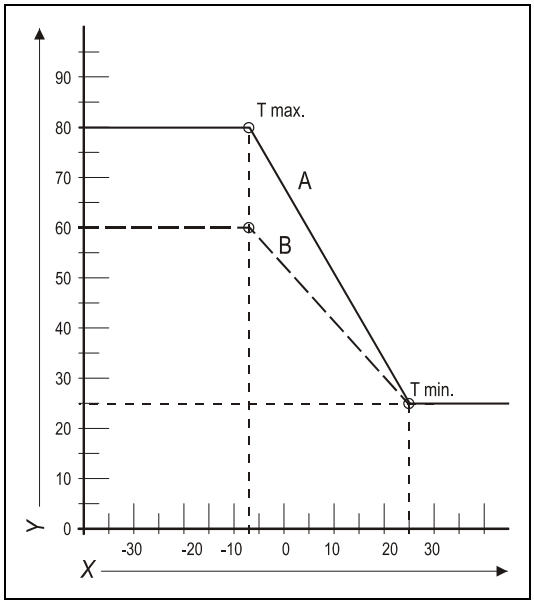

10.7 Conversion to different gas type

CAUTION

Work on gas carrying parts may only be carried out by a qualified competent person.

If a different type of gas is connected to the appliance than that for which the appliance has been set by the manufacturer, the gas metering ring should be replaced. Conversion sets for other types of gas are available to order.

10.7.1 Converting the gas restriction.

1. Switch the boiler off and isolate the boiler from the mains power.
2. Close the gas tap.
3. Remove the front panel from the appliance.
4. Unscrew the coupling (A) above the gas valve and twist the gas mixing tube towards the rear (B).
5. Replace the O-ring (C) and the gas restriction (D) with the rings from the conversion set.
6. Re-assemble in reverse sequence.
7. Open the gas tap.
8. Check the gas connections before the gas valve for gas-tightness.
9. Switch on the mains power.
10. Check the gas connections after the gas valve for gas-tightness (during operation).
11. Now check the setting of the CO_2 level at high setting (H in display) and low setting (L in display).

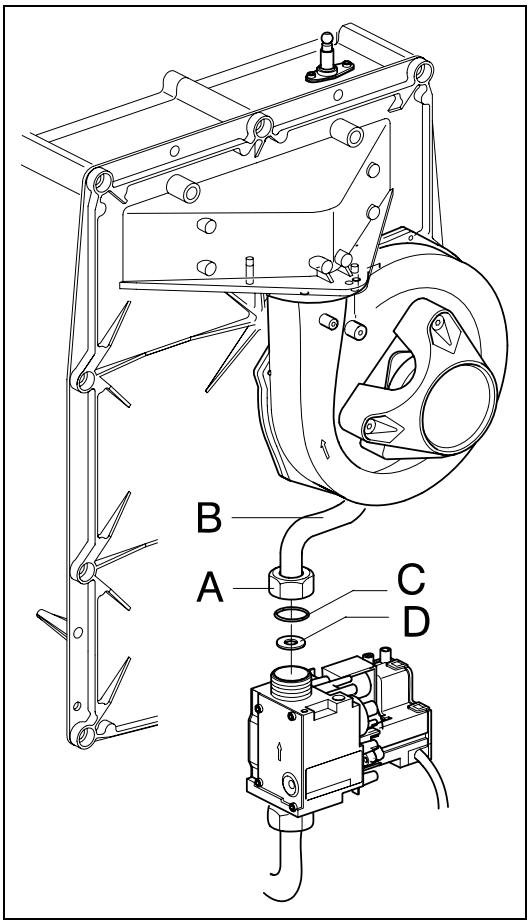

CAUTION

It is not possible to adjust the CO_2 level at high setting. When the CO_2 level at high setting is not within the prescribed tolerance band please contact Intergas Heating.

For adjusting CO_2 level at low setting see § 10.8.

12. Place a sticker for the gas type set over the existing sticker next to the gas valve.
13. Place a sticker for the gas type set next to the identification plate.
14. Fit the appliance front panel.

10.7.2 Gas-/air adjustment

The gas-/air adjustment has been set in the factory and in principle requires no adjustments.

The setting can be checked by measuring the CO_2 percentage in the combustion gases or by measurement of the pressure difference.

In the case of possible disturbance of the adjustment, replacement of the gas valve or conversion to another gas type the adjustment must be checked and if necessary set in accordance with the table below.

Gastype	Natural gas H	Propane P
Gas category	2H G20 20mBar	3P G31(propane) 37mBar
CO_2% at high setting(H) *(and + 2x)* *With opened casing. N.B. Not adjustable*	9.1 ± 0.5	10.3 ± 0,5
CO_2% at low setting (L) *(and −)* *With opened casing*	See A or B on next page	
Gas supply pressure (mBar)	20-30	25-35
Ø gas restriction (mm) (HRE 18 OV)	*6.20*	*5.05*
Ø gas restriction (mm) (HRE 24 OV and 30 OV)	*6.95*	*5.50*
Minimum rpm (% of max) *(parameter c and d)*	30	40
Min. start rpm (% of max) *(parameter F and F .)*	70	50

CAUTION

Check that the Gas test point is gas-tight. No adjustment should be made to the gas valve without prior permission of Intergas Technical Services.

A. CO_2 demands at low setting for natural gas
The CO_2 level at low setting must be equal to or max. 0.3 % lower than the level at high setting. Important: The CO_2 level at low setting must never be under 8.6%. For example (natural gas): 1: CO_2 level at high setting is 9.2 % → CO_2 level at low setting is 8.9 – 9.2 % . 2: CO_2 level at high setting is 8.7 % → CO_2 level at low setting is 8.6 – 8.7 % .

B. CO_2 demands at low setting for propane
The CO_2 level at low setting must be between 0.3 % and 0.6 % lower than the level at high setting. Important: The CO_2 level at low setting must never be under 9.3 %. For example (propane): 1: CO_2 level at high setting is 10.5 % → CO_2 level at low setting is 9.9 – 10.2 % . 2: CO_2 level at high setting is 9.8 % → CO_2 level at low setting is 9.3 – 9.5 % .

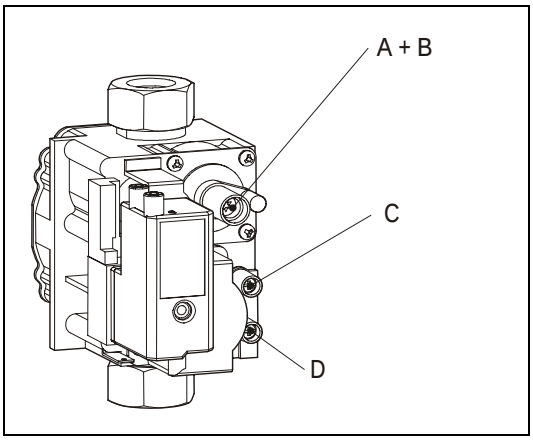

10.8 Setting gas/air adjustment

10.8.1 Setting by measurement of the CO_2 content of the combustion gases

A. Cover screw
B. Adjusting screw for low position
C. Offset pressure measurement nipple
D. Gas supply pressure measurement nipple

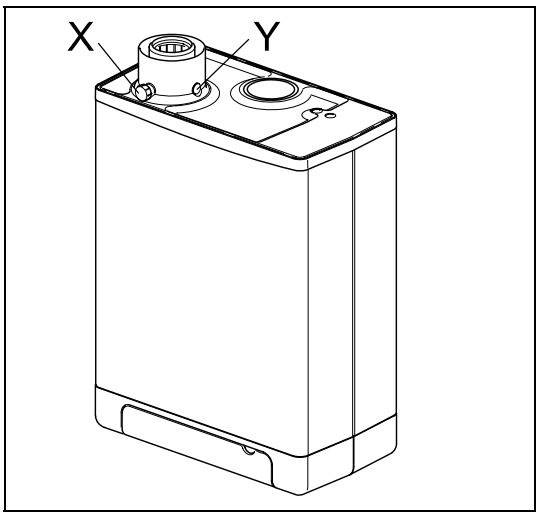

1. Switch the appliance off with the on/off key (- on service display).
2. Unscrew the CO_2 measuring nipple (X) and connect the measuring hose.
   Note: position Y is measurement point for air inlet.
3. Remove the front panel from the appliance.
4. Switch the appliance on with the on/off key.
5. Adjust the appliance to the highest power by simultaneously pressing the keys 🔧 and ▬ on the operating panel until an H appears on the display.
6. Check if the CO_2 level is in accordance with the value mentioned in § 10.7.2.

CAUTION
It is not possible to adjust the CO_2 level at high setting. When the CO_2 level at high setting is not within the prescribed tolerance band please contact Intergas Heating.

7. Note the measured CO_2 value and adjust the appliance to the lowest power by simultaneously pressing the keys 🔧 and ▬ on the operating panel until an L appears on the display.
8. Measure the CO_2 value. If the CO_2 value does not correspond with the value in the table under 10.7.2 proceed with setting as follows:
9. Remove the cover cap (A).
10. Adjust the set screw (B) to the correct CO_2 value (clockwise higher and anti-clockwise lower).
11. After measurement and setting replace the cover cap (A) and close the CO_2 measurement nipple.
12. Adjust the appliance to the maximum power by simultaneously pressing the keys 🔧 and ✚(2 x) on the operating panel until an H appears on the display.
13. Measure the CO_2 value. If the CO_2 value does not correspond with the value in the table under 10.7.2 please contact the manufacturer.
14. Press simultaneously on the ✚ and ▬ keys to leave the test program.
15. Fit the front panel to the appliance.

Note: *Check that the measurement nipples used are gas-tight.*

11 FAULTS

11.1 Fault codes

If the fault LED is flashing, the boiler controller has detected a fault. A fault code will be indicated on the temperature display.

Once the fault has been rectified the boiler controller can be restarted.

Press the reset key on the operating panel.

The following faults are distinguished

Temperature display	Display Fault	Possible Solution
10, 11, 12, 13, 14	Sensor fault S1	• Check wiring for break • Replace S1
20, 21, 22, 23, 24	Sensor fault S2	• Check wiring for break • Replace S2
0	Sensor fault after self check	• Replace S1 and/or S2
1	Temperature too high	• Air in installation • Pump not running • Unsufficient flow in installation, radiators closed, pump setting too low • Flow switch sticking
2	S1 and S2 interchanged	• Check cable loom • Replace S1 or S2
4	No flame signal	• Gas tap closed • No or incorrect ignition gap • Gas supply pressure too low of failling • Gas valve or ignition unit not powered
5	Poor flame signal	• Condensate drain blocked • Check adjustment of gas valve
6	Flame detection fault	• Replace ignition cable + spark plug cap • Replace ignition unit • Replace boiler controller
8	Incorrect fan speed	• Fan catching on casing • Wiring between fan and casing • Check wiring for poor wire contact • Replace fan
29,30	Gas valve relay faulty	• Replace boiler controller

11.2 Other faults

11.2.1 Burner does not ignite

Possible causes:		Solution:
Gas tap is closed.	➡	Open gas tap.
No ⬇		
Air in the gas pipe.	➡	Remove air form gas pipe.
No ⬇		
Gas supply pressure too low.	➡	Contact the gas supply company.
No ⬇		
No ignition.	➡	Replace ignition electrode.
No ⬇		
No spark. Ignition unit on gas valve faulty.	➡	Check the cabling. Check the spark plug cap. Replace the ignition unit.
No ⬇		
Gas/air adjustment not correctly set.	➡	Check adjustment. See gas/air adjustment.
No ⬇		
Fan faulty.	➡	Check the wiring. Check the fuse , if necessary, replace the fan.
No ⬇		
Fan dirty.	➡	Clean the fan.
No ⬇		
Gas valve faulty.	➡	Replace the gas valve. Re-adjust the gas valve, see gas/air adjustment.

11.2.2 Burner ignites noisily

Possible causes:		Solution:
Gas supply pressure too high.	➡	The house pressure switch may be faulty. Contact the gas company.
No ⬇		
Incorrect ignition gap.	➡	Replace the ignition pin. Check the ignition electrode gap.
No ⬇		
Gas/air adjustment not correctly set.	➡	Check the setting. See gas/air adjustment.
No ⬇		
Weak spark.	➡	Check the ignition gap. Replace the ignition electrode. Replace the ignition unit on the gas valve.

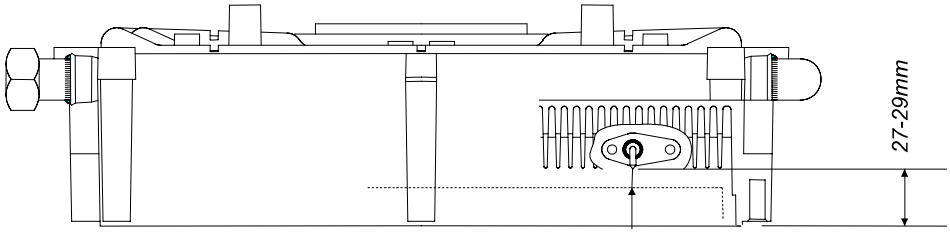

Spark gap app. 4,5 mm

11.2.3 Burner resonating

Possible causes:		Solution:
Gas supply pressure too low.	➡	The house pressure switch may be faulty. Contact the gas company.
No ⬇		
Recirculation of combustion gasses.	➡	Check the gas flue an the air supply.
No ⬇		
Gas/air adjustment not correctly set.	➡	Check the setting, see gas/air adjustment.

11.2.4 No heating (CH)

Possible causes:		Solution:
Room thermostat / weather-dependent adjustment not closed or faulty.	➡	Check the wiring. Replace the thermostat. Replace the weather-dependant adjustment.
No ⬇		
No current (24 V).	➡	Check the wiring against the diagram. Check the connector X4. Replace the faulty manager.
No ⬇		
Pump not running.	➡	Check the power supply. Check connector X2. Replace faulty pump.
No ⬇		
Burner not firing on CH: sensor S1 or S2 faulty.	➡	Replace sensor S1 or S2. See fault code.
No ⬇		
Burner does not ignite.	➡	See burner does not ignite.

11.2.5 The power is reduced

Possible causes:		Solution:
At high rpm the power has fallen by more than 5%.	➡	Check appliance and flue system for fouling. Clean the appliance and flue system.

11.2.6 CH does not reach temperature

Possible causes:		Solution:
Room thermostat setting incorrect.	➡	Check the setting and if necessary adjust: Set to 0.1A.
No ⬇		
Temperature is too low.	➡	Increase the CH temperature. See Operating CH . Check outside sensor for short-circuiting. Rectify.
No ⬇		
Pump not running correctly. Pump setting is too low.	➡	Increase pump setting, or replace the pump.
No ⬇		
No circulation in the installation.	➡	Check whether there is circulation: at least 2 or 3 radiators must be open.
No ⬇		
The boiler power has not been correctly set for the installation.	➡	Adjust the power. See setting maximum CH power.
No ⬇		
No heat transfer as a result of lime scale or fouling in the heat exchanger.	➡	De-scale or flush the heat exchanger on the CH side.

11.2.7 No hot water (only when an indirectly heated DHW storage cylinder is applied)

Possible causes:		Solution:
No current at the diverter valve.	➡	Check the wiring according to the diagram.
No ⬇		
Diverter valve does not switch.	➡	Replace diverter valve.
No ⬇		
No current at the DHW storage cylinder sensor/thermostat.	➡	Check the wiring according to the diagram.
No ⬇		
Burner does not ignite on DHW: DHW storage cylinder sensor/thermostat defect.	➡	Replace DHW storage cylinder sensor/thermostat.
No ⬇		
Burner does not ignite.	➡	See burner does not ignite.

11.2.8 Hot water does not reach temperature (only when an indirectly heated DHW storage cylinder is applied)

Possible causes:		Solution:
No ⬇		
Temperature setting for DHW storage cylinder too low.	➡	Set the DHW storage cylinder temperature. See 10 Setting and adjustment.

12 MAINTENANCE

The appliance and the installation should be checked and if necessary cleaned every year by a registered expert.

For assembly and disassembly the following tools can be used:

1. Cross head screwdriver
2. Allen key 8 mm
3. Adjustable spanner

After servicing, complete the relevant Benchmark Service Record section located on page 42 of this document.

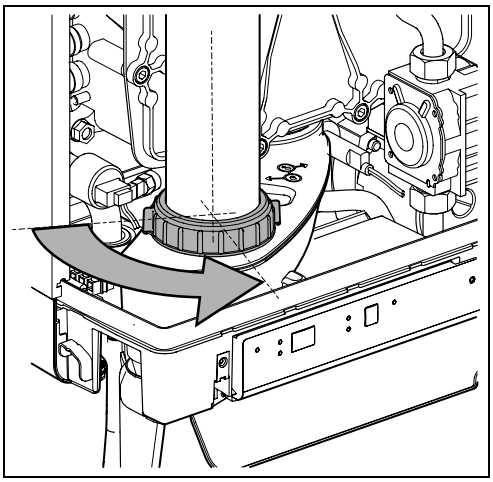

CAUTION

Work on gas carrying parts may only be carried out by an authorised installer.
When the appliance has just been operating parts may be hot.

12.1 Disassembly

1. Switch the boiler off and isolate the boiler from the mains power.
2. Close the gas tap.
3. Open the display cover and turn the two screws on the left- and right-hand side of the display and remove the front panel.
4. Wait until the appliance has cooled down.
5. Unscrew the coupling nut at the base of the flue pipe anti-clockwise.
6. Slide the flue pipe upwards (1) turning it anti-clockwise until the bottom of the pipe is above the condensate drain pan connection. Pull the bottom of the pipe forwards (2) and remove the pipe downwards (3) turning it anti-clockwise.
7. Lift the condensate drain pan on the left-hand side from the connection to the condensate trap (4) and turn it to the right with the condensate trap connection over the edge of the base tray (5). Push the back of the condensate drain pan downward from the connection to the heat exchanger (6) and remove it from the appliance.
8. Remove the connector from the fan and the ignition unit from the gas valve.
9. Unscrew the coupling below the gas valve.
10. Unscrew the socket head screws from the front cover and remove this complete with gas valve and fan to the front (NB ensure that the burner, insulation plate, gas valve, gas supply and fan do not get damaged).

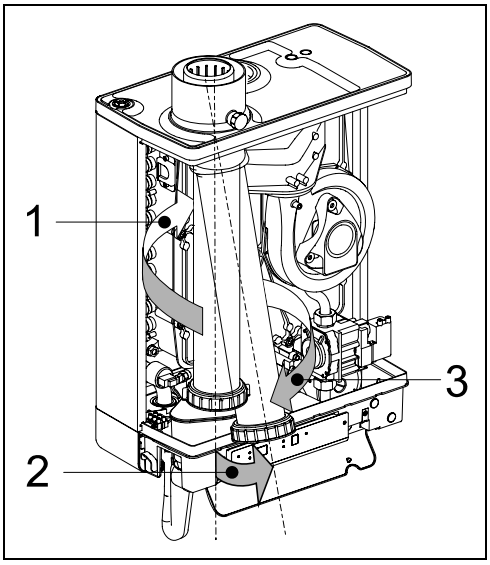

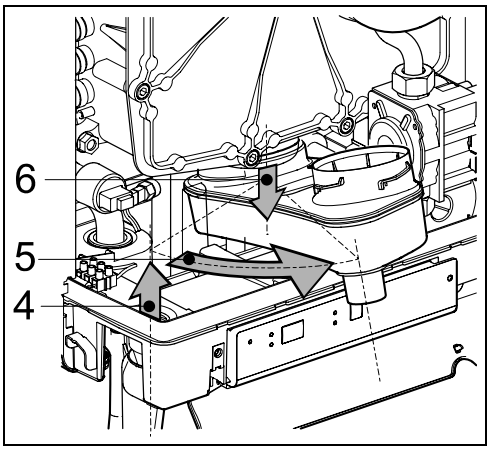

12.2 Cleaning

1. Clean the heat exchanger from top to bottom with a plastic brush or compressed air.
2. Clean the underside of the heat exchanger.
3. Clean the condensate drain pan with water.
4. Clean the condensate trap with water (The side branch on the condensate trap may be sawn off to simplify access for a cleaning brush).

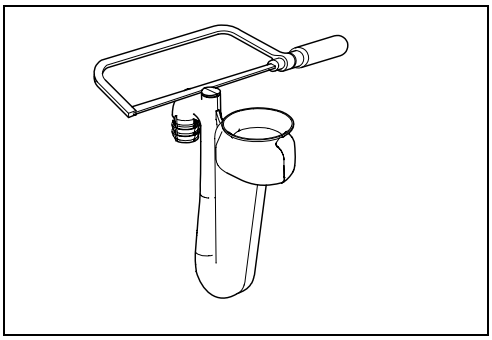

12.3 Assembly

CAUTION

When fitting the various seals check for damage, hardening, tears or hairline tears and/or discoloration. Where necessary fit a new seal. Also check whether seals are still correctly positioned.

Failure to fit the sensors S1 and/or S2, or to fit them correctly, can result in serious damage.

Warranty will be void by not correctly replacing removed parts!

1. Check that the seal around the front cover is correctly installed. Place the front cover on the heat exchanger and secure it using the socket head screws plus serrated lock washers. Tighten the socket head screws equally hand-tight, working crosswise.
2. Fit the gas connection below the gas valve.
3. Fit the connector to the fan and the ignition unit to the gas valve.
4. Fit the condensate drain by sliding on to the exchanger outlet stump (1) with the condensate trap connection still in front of the base tray. Then turn it to the left (2) and push it downwards into the condensate trap connection (3). Make sure in doing this that the back of the condensate drain pan comes to rest on the lug at the back of the base tray (A).
5. Fill the condensate trap with water and fit it to the connection below the condensate drain pan.
6. Slide the flue pipe, turning it anti-clockwise, with the top around the flue adapter, into the top cover. Insert the bottom into the condensate drain pan and tighten the coupling nut clockwise.
7. Open the gas tap and check the gas connections below the gas valve and on the mounting bracket for leakage.
8. Check the CH and, if applicable, the water pipes for leakage.
9. Switch on the mains power.
10. Switch the appliance on with the ⏻ key.
11. Check the front cover, the fan connection on the front cover and the flue pipe components for leakage.
12. Check the gas/air adjustment.
13. Fit the casing, tighten the two screws left and right of the display and close the display cover.
14. Check the heating and, if applicable, the hot water supply.

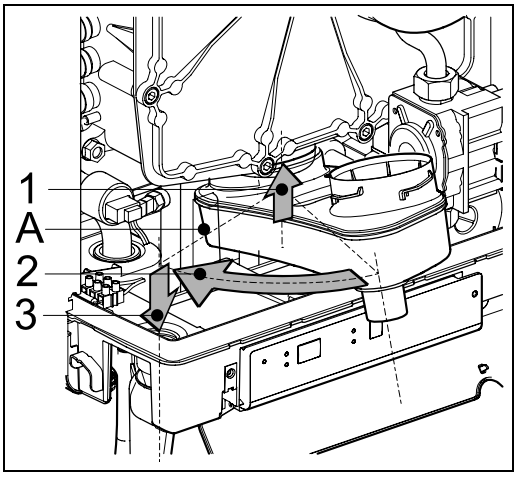

12.4 Combustion

During routine servicing, and after any maintenance or change of part of the combustion circuit the following must be checked:

- The integrity of the flue system and the flue seals, as described in § 8.5 and the British Standards codes of practices, specifically BS 5440.
- The integrity of the boiler combustion circuit and the relevant seals, as described in § 12.3.
- The operational (working) gas inlet pressure at maximum rate, as described in § 10.7.2.
- The combustion performance, as described in § 10.7.2. and § 10.8.

BS 6798: 2009 Specification for installation and maintenance of gas-fired boilers of rated input not exceeding 70 kW net advises that:

- The person carrying out a combustion measurement should have been assessed as competent in the use of a flue gas analyser and the interpretation of the results;
- The flue gas analyser used should be one meeting the requirements of BS7927 or BS-EN50379-3 and be calibrated in accordance with the analyser manufacturers' requirements, and
- Competence can be demonstrated by satisfactory completion of the CPA1 ACS assesment, which covers the use of electronic portable combustion gas analysers in accordance with BS7967, Parts 1 to 4.

Connect the flue gas analyser to the flue gas sampling point (X) and check combustion as described in § 10.7. If the combustion reading is greater than the acceptable value and the integrity of the complete flue system and combustion circuit seals have been verified and the inlet gas pressure has been verified, proceed as in § 10.7.2.

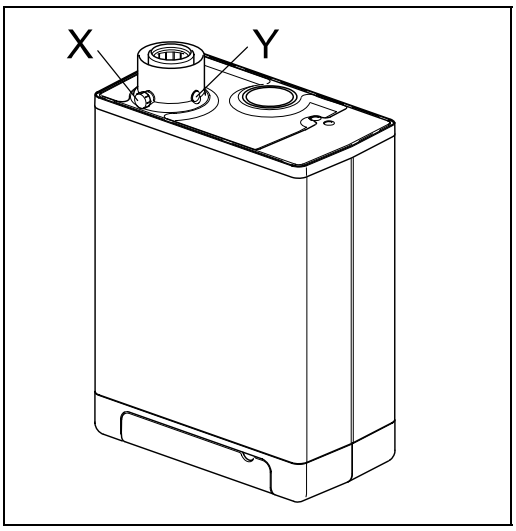

13 ELECTRICAL DIAGRAM

A	Earth connections heat-exchanger	F	Fuse (2A T)	P1	External CH pump	S7	CH water pressure sensor
B	Spark plug cover	G	Gas valve + ignition unit	R	Resistance	V	Fan
C	Boiler controller	I	Ionisation-/ ignition probe	S1	Flow sensor		
E	Earth connections boiler controller	M	Main voltage	S2	Return sensor		

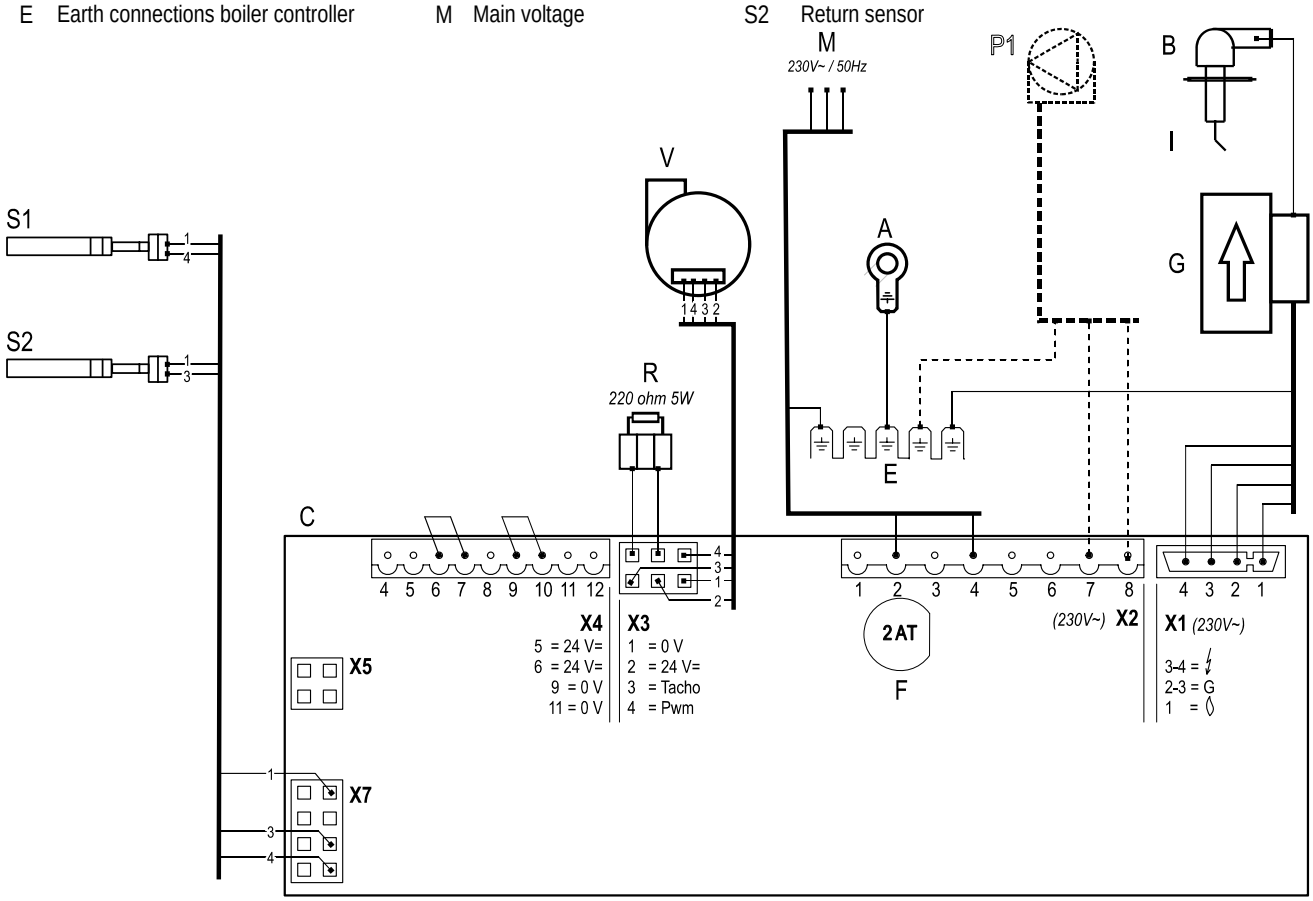

Connector X4 *24V=*	4-5		External saving switch *(remove connection)*
	6-7		On/off room thermostat *(0,1A-24Vdc)* and/or frost thermostat (remove connection 6-7)
	8-9		External sensor *(12k ohm / 25°C)*
	11-12		OpenTherm thermostat (remove connection 6-7)
Connector X2 *230V~*	1-3		S-plan or Y-plan connection
	1-3		Frost thermostat 230 AC (1 = Switch live, 3 = Live(fused)
	2-4		Mains (2 = Live (brown), 4 = Neutral (blue))
	7-8		External CH-pump (8 = L (brown), 7 = Neutral (blue)
	3-5-6		Diverter valve, ext. DHW tank (3 = Live (brown), 5 = Switch (black), 6 = Neutral (blue) (f.e. VC4013 Honeywell 230V~)
Connector X5			Computer interface

13.1 NTC resistances

NTC 12kOhm					
T [°C]	R[ohm]	T [°C]	R[ohm]	T [°C]	R[ohm]
-15	76020	25	12000	65	2752
-10	58880	30	9805	70	2337
-5	45950	35	8055	75	1994
0	36130	40	6653	80	1707
5	28600	45	5522	85	1467
10	22800	50	4609	90	1266
15	18300	55	3863	95	1096
20	14770	60	3253	100	952

14 SHORT SPARES LIST

Description	Article number
Boiler controller	074277
Fan	074397
Wall mounting strip	145308
Temperature sensor (heat exchanger)	200117
Ignition / ionisation electrode	209367
Ignition cable	221357
Gas valve Siemens	801467
Ignition module	801477
Condensate trap	844187
Condensate collector	847037
Seal gas valve (inlet)	875757
O-ring gas restriction ring	875827
O-ring front plate Compact HRE OV 30	877807
O-ring front plate Compact HRE OV 24	877927
O-ring front plate Compact HRE OV 18	876467
Seal ring condensate collector (heat exchanger connection)	878147
O-ring flue pipe dia 68*4	878537
Seal ring flue pipe (outlet side)	878547
Condensate trap connection	878577

15 WARRANTY CONDITIONS

With due regard for the conditions indicated below, Intergas Heating Ltd warrants to the authorised installer the soundness of the materials used in and the correct operation of its Central Heating products, when used for the purpose for which they are delivered. As the occasion arises we should be enabled to ascertain, on site if necessary, the soundness of the warranty entitilement.

The warranty comprises:

The warranty is limited to the free-of-charge resupply of parts that during the warranty period, entirely in our judgement exhibit material or manufacturing faults that are not the result of normal wear etc. Such parts should be sent to us carriage paid together with an indication of the defect and after replacement become our property.

1. The warranty period on parts is 2 years calculated from the date of installation. The extended warranty period on parts is 3 years calculated from the date of installation. The extended warranty is effective only if the annex to the warranty certificate has been signed by the purchaser and returned to us within 8 days of the date of installation.
2. The warranty period on the water tightness of the boiler's heat exchanger is 10 years, provided however that if, as a result of corrosion, leakages arise which in our view cannot be rectified on site, we will exclusively supply that boiler part on the basis of old for new, calculated at the time of replacement from the installation date.
3. The warranty ceases to apply if it is ascertained that the defects, damage or excessive wear are attributable to improper use or injudicious treatment or inexpert repair, setting, installation or maintenance by unauthorised installers or to the product being exposed to substances containing aggressive chemicals (including hair lacquer) and other harmful substances.
4. The warranty also ceases to apply if pipes and couplings have been used in the installation which can cause oxygen diffusion, or if the defect is the result of depositing of boiler scale (harmful to the boiler and the installation).
   Surface damage and transport damage are not covered by the warranty. The right to warranty ceases to apply if it cannot be demonstrated that, after commencement of use, the central heating boiler has been serviced at least once a year by an installer authorised for that purpose by or on behalf of the gas company. The instructions for installation and use which we issue for the boilers concerned should be complied with in full.
5. The manufacturer's liability under the agreement is expressly limited to fulfilment of the warranty obligations defined in this article. All claims for compensation, except for those relating to failure to fulfil the warranty obligations, are excluded. With due regard for the mandatory provisions regarding product or other liability, no rights may ever be derived at any time with regard to any consequential loss, loss of net worth or any loss whatsoever that might arise from defects in materials delivered or work performed by the manufacturer.
   In addition, all offers and agreements concerning deliveries and/or services to be made or provided by us are governed by the Conditions of Sale.

A copy of these conditions will be sent to you free of charge on request. Conditions to the contrary are expressly rejected. Furthermore all offers of and agreements regarding products to be supplied and/or services to be provided by us are subject to the general conditions of sales . A copy of these conditions will be sent free of charge on request. Other conditions are expressly rejected.

6. The warranty is effective only if the annex to this warranty certificate has been signed by the purchaser and returned to us within 8 days of the date of installation. By signing the warranty card the purchaser states his/her agreement that the items have been delivered in good condition.
7. If the installer's business has been terminated before the end of the warranty period, the user may invoke our warranty obligations to the installer.

Use as intended

The appliance, as described in this documentation, is intended for heating rooms via a central heating installation and/or for supplying hot water. Any other use lies outside the intended use of the appliance. No liability can be accepted for loss or damage arising from incorrect use.

16 CE DECLARATION

Declaration of conformity in accordance with ISO IEC GUIDE 22.

Manufacturer	Intergas Heating Ltd
Address	Unit 6, West Court Buntsford Park Road Bromsgrove Worcestershire B60 3DX

Hereby declares that the CH appliances:

Compact HRE 30 OV
Compact HRE 24 OV
Compact HRE 18 OV

meets the provisions of the following directives:
Machinery Directive (2006/42//EC)
Low Voltage Directive (2006/95/EC)
Gas Appliances Directive (90/396/EEC)
Boiler Efficiency Directive for new oil- and gas-fired central heating boilers (92/42/EEC)
EMC Directive (2004/108/EC)

H. Bosscher, November 2009

17 GAS BOILER SYSTEM COMMISSIONING CHECKLIST

GAS BOILER SYSTEM COMMISSIONING CHECKLIST

This Commissioning Checklist is to be completed in full by the competent person who commissioned the boiler as a means of demonstrating compliance with the appropriate Building Regulations and then handed to the customer to keep for future reference.

Failure to install and commission this equipment to the manufacturer's instructions may invalidate the warranty but does not affect statutory rights.

Customer Name _____ Telephone Number _____

Address _____

Boiler Make and Model _____

Boiler Serial Number _____

Commissioned by *(print name)* _____ CORGI ID Number _____

Company Name _____ Telephone Number _____

Company Address _____

_____ Commissioning Date _____

To be completed by the customer on receipt of a Building Regulations Compliance Certificate*:

Building Regulations Notification Number *(if applicable)* _____

CONTROLS Tick the appropriate boxes

Time and Temperature Control to Heating	Room Thermostat and Programmer/Timer ☐	Programmable Room Thermostat ☐	Load/Weather Compensation ☐	Optimum Start Control ☐
Time and Temperature Control to Hot Water	Cylinder Thermostat and Programmer/Timer ☐			Combination Boiler ☐
Heating Zone Valves			Fitted ☐	Not Required ☐
Hot Water Zone Valves			Fitted ☐	Not Required ☐
Thermostatic Radiator Valves			Fitted ☐	Not Required ☐
Automatic Bypass to System			Fitted ☐	Not Required ☐
Boiler Interlock				Provided ☐

ALL SYSTEMS

The system has been flushed and cleaned in accordance with BS7593 and boiler manufacturer's instructions Yes ☐

What system cleaner was used? _____

What inhibitor was used? _____ Quantity _____ *litres*

CENTRAL HEATING MODE Measure and Record:

Gas Rate	_____ m^3/hr	OR		_____ ft^3/hr
Burner Operating Pressure (if applicable)	_____ mbar	OR	Gas Inlet Pressure	_____ mbar
Central Heating Flow Temperature				_____ °C
Central Heating Return Temperature				_____ °C

COMBINATION BOILERS ONLY

Is the installation in a hard water area (above 200ppm)? Yes ☐ No ☐

If yes, has a water scale reducer been fitted? Yes ☐ No ☐

What type of scale reducer has been fitted? _____

DOMESTIC HOT WATER MODE Measure and Record:

Gas Rate	_____ m^3/hr	OR		_____ ft^3/hr
Burner Operating Pressure (at maximum rate)	_____ mbar	OR	Gas Inlet Pressure (at maximum rate)	_____ mbar
Cold Water Inlet Temperature				_____ °C
Hot water has been checked at all outlets			Yes ☐ Temperature	_____ °C
Water Flow Rate				_____ *l/min*

CONDENSING BOILERS ONLY

The condensate drain has been installed in accordance with the manufacturer's instructions and/or BS5546/BS6798 Yes ☐

ALL INSTALLATIONS

If required by the manufacturer, record the following CO_2 _____ % OR CO _____ *ppm* OR CO/CO_2 Ratio _____

The heating and hot water system complies with the appropriate Building Regulations Yes ☐

The boiler and associated products have been installed and commissioned in accordance with the manufacturer's instructions Yes ☐

The operation of the boiler and system controls have been demonstrated to and understood by the customer Yes ☐

The manufacturer's literature, including Benchmark Checklist and Service Record, has been explained and left with the customer Yes ☐

Commissioning Engineer's Signature _____

Customer's Signature _____

(To confirm satisfactory demonstration and receipt of manufacturer's literature)

*All installations in England and Wales must be notified to Local Authority Building Control (LABC) either directly or through a Competent Persons Scheme. A Building Regulations Compliance Certificate will then be issued to the customer.

benchmark COLLECTIVE MARK
THE MARK OF QUALITY FOR THE INSTALLATION, COMMISSIONING AND SERVICING OF DOMESTIC HEATING AND HOT WATER SYSTEMS

©Heating and Hotwater Industry Council (HHIC)

www.centralheating.co.uk

18 SERVICE RECORD

SERVICE RECORD

It is recommended that your heating system is serviced regularly and that the appropriate Service Record is completed.

Service Provider
Before completing the appropriate Service Record below, please ensure you have carried out the service as described in the manufacturer's instructions.

Always use the manufacturer's specified spare part when replacing controls.

SERVICE 1 Date
Energy Efficiency Checklist completed? Yes ☐ No ☐
Engineer Name
Company Name
Telephone Number
CORGI ID Number
Comments
Signature

SERVICE 2 Date
Energy Efficiency Checklist completed? Yes ☐ No ☐
Engineer Name
Company Name
Telephone Number
CORGI ID Number
Comments
Signature

SERVICE 3 Date
Energy Efficiency Checklist completed? Yes ☐ No ☐
Engineer Name
Company Name
Telephone Number
CORGI ID Number
Comments
Signature

SERVICE 4 Date
Energy Efficiency Checklist completed? Yes ☐ No ☐
Engineer Name
Company Name
Telephone Number
CORGI ID Number
Comments
Signature

SERVICE 5 Date
Energy Efficiency Checklist completed? Yes ☐ No ☐
Engineer Name
Company Name
Telephone Number
CORGI ID Number
Comments
Signature

SERVICE 6 Date
Energy Efficiency Checklist completed? Yes ☐ No ☐
Engineer Name
Company Name
Telephone Number
CORGI ID Number
Comments
Signature

SERVICE 7 Date
Energy Efficiency Checklist completed? Yes ☐ No ☐
Engineer Name
Company Name
Telephone Number
CORGI ID Number
Comments
Signature

SERVICE 8 Date
Energy Efficiency Checklist completed? Yes ☐ No ☐
Engineer Name
Company Name
Telephone Number
CORGI ID Number
Comments
Signature

SERVICE 9 Date
Energy Efficiency Checklist completed? Yes ☐ No ☐
Engineer Name
Company Name
Telephone Number
CORGI ID Number
Comments
Signature

SERVICE 10 Date
Energy Efficiency Checklist completed? Yes ☐ No ☐
Engineer Name
Company Name
Telephone Number
CORGI ID Number
Comments
Signature

Intergas boilers are manufactured in a Kiwa ISO 9001 certified production faccility.

Intergas Heating Ltd 88324701

Intergas Heating Limited
Unit 6, West Court
Buntsford Park Road
Bromsgrove
Worcestershire
B60 3DX
Telephone : 01527 888000
Fax : 01527 888001
info@intergasheating.co.uk
www.intergasheating.co.uk