KESTON

C45 C40P C55 C55P

Fan Powered High Efficiency Modulating Domestic Condensing Gas Boiler

Installation and Servicing Instructions

C45, C40P, C55 & C55P Models

ISSUE: 1/2010

CE/PI No : 87CL131
C45 - GC No : 41-930-25

CE/PI No : 87BN14
C40P - GC No : 41-930-08
C55 - GC No : 41-930-09
C55P - GC No : 41-930-10

These instructions must be left either with the user or next to the site gas meter.

KESTON BOILERS LIMITED
34 West Common Road, Bromley, Hayes, Kent BR2 7BX, UK
Tel. +44 (0)20 8462 0262 Fax. +44 (0)20 8462 4459
email : info@keston.co.uk web : www.keston.co.uk

COMPLIANT WITH BUILDING REGULATION PART L1 & L2 2002
SEDBUK A RATED

Qualified for Energy Technology List www.eca.gov.uk
Authorised User No. 00144

CE

benchmark

CONTENTS

Section	Description
0	**HANDLING INSTRUCTIONS**
0.1	List of contents
0.2	Recommended handling procedure
1	**GENERAL INSTRUCTION**
1.1	Description
1.2	Boiler Schematic
1.3	Related Documents
1.4	Physical Data
1.5	Performance Data C45 and C40P
1.6	Performance Data C55 and C55P
1.7	Optional Accessories
2	**BOILER LOCATION**
2.1	Dimensions & Minimum Clearances
2.2	Service Connections
2.3	Position
2.4	Electrical
2.5	Boiler Size Selection
2.6	Gas Supply
2.7	Water Systems
2.8	Flue System
2.9	Air Supply
2.10	Compartment Installation
2.11	Condensate Drainage
3	**INSTALLATION OF THE BOILER**
3.1	Wall Mounting Bracket
3.2	Mounting The Boiler
3.3	Assembly Practice
3.4	Installing Flue And Air Pipes
3.5	Condensate Drainage
3.6	Water System
3.7	Gas Supply
3.8	Electrical Supply
3.9	Exchanging A Boiler

4 COMMISSIONING OF THE BOILER
4.1 Initial Flushing
4.2 Gas Supply
4.3 Electrical Installation
4.4 LP Gas
4.5 Initial Firing
4.6 Hot Flushing
4.7 Combustion Testing
4.8 Checking The Gas Pressure
4.9 Timing The Gas Meter
4.10 Handing Over To The User

5 FAULT FINDING
5.1 Electrical Control Sequence
5.2 Normal Operation
5.3 Fault Modes
5.4 Functional Flow Wiring Diagram
5.5 Electrical Wiring Diagram
5.6 Illustrated Wiring Diagram
5.7 Exploded Assembly Diagrams

6 SERVICING
6.1 Pre Service Checks
6.2 Recommended Routine Service

7 REPLACEMENT OF PARTS
7.0 General
7.1 Precautions
7.2 Access
7.3 Replacement Procedure
7.4 Electrical Components
7.5 Spark Ignition/Flame Detection Electrode
7.6 Burner
7.7 Heat Exchanger
7.8 Condensate Trap
7.9 Pump

8 SPARE PARTS LISTINGS

9 GAS BOILER COMMISSIONING CHECKLIST

0. HANDLING INSTRUCTION

0.1 LIST OF CONTENTS

The Keston C40P,C45 and C55(P) are supplied almost totally pre-assembled. Since the units use standard 50 mm muPVC pipe for the flue and air intake systems the boiler is packed in a single box without additional flue kit. All additional components are packed inside the boiler cabinet itself. The following is a list of components and their location in the boiler cabinet

Equipment List

Item	Quantity	Location
Wall Bracket Rawl Plugs	5	Inside accessories bag
Wall Bracket Wall Fixing Screws	5	Inside accessories bag
Wall Mounting Bracket	1	Secured to inside right hand side of boiler case
Wall Mounting Bracket Nuts	2	Inside accessories bag.
Wall Mounting Bracket Washers	2+2	Inside accessories bag
Gas Cock (22 mm cxc)	1	Inside accessories bag
50 mm muPVC Air/Flue Terminals	2	Inside accessories bag
Flue Spigot Nipple	1	Inside accessories bag
Cabinet Cable Entry Clamps	2	Inside accessories bag
User Control Knobs	2	Inside accessories bag
Outside Temperature Sensor	1	Inside accessories bag

Document List

Item	Quantity	Location
User Instructions	1	In A4 envelope
Lifting Instructions	1	In A4 envelope
Installer Notice	1	In A4 envelope
Registration of Purchase - 2 YEAR Guarantee	1	In A4 envelope - **C45&C40P**
2 YEAR Warranty Plan	1	In A4 envelope - **C45&C40P**
12 Month Guarantee	1	In A4 envelope - **C55&C55P**
Installation Template	1	In document bag

Remove the cabinet shell by removing the four retaining screws in the top of the cabinet and the three retaining screws in the bottom of the cabinet.

0.2 Recommended Handling Procedure

Before hanging the appliance on the wall it is best to store the appliance laid on its back with the casing on. When ready to hang the boiler on the wall remove the casing and place to one side. At this stage it is assumed that the wall bracket is correctly secured on the wall face.

a) Have the wall bracket nuts and washers to hand so that they can be accessed whilst holding the boiler in position on its mounting bracket.
b) The boiler has a dry weight of 61.5kg (136 lbs) and will therefore require at least two people to lift without the use of lifting aids.
c) Lift the boiler by gripping at the four corners of the boiler back plate. When lifting this appliance the back should be kept straight at all times. Avoid twisting at the waist - reposition the feet instead. Avoid upper body bending when holding the appliance and keep the boiler as close to the body as possible.
d) Lift the boiler and locate onto the two studs of the wall mounting bracket.
e) Hold the boiler on the wall bracket by applying pressure onto the front surface of the heat exchanger.
f) Place the wall mounting bracket washers over the bracket studs protruding through the back plate of the boiler.
g) Secure the boiler onto the wall bracket by fixing the wall mounting bracket nuts onto the wall bracket studs. These should be tightened well.

In the event the appliance must be fitted by one operative the integral circulating pump head and complete combustion fan/gas valve/venturi assembly can be removed from the appliance prior to lifting. However, the resulting weight will still be higher than considered acceptable for a one-man lift.

Safety footwear and gloves are recommended PPE when lifting this appliance.

The C45 and C55 boilers can be fitted in compartments with very small clearances required around the appliance (refer to Section 1.4). Due consideration should therefore be given to access within the compartment for lifting and positioning.

1. GENERAL INSTRUCTION

1.1 DESCRIPTION

The Keston C45, C40P and C55(P) are unique in concept and design. They comprise a high efficiency stainless steel heat exchanger coupled with a low emissions burner to deliver ultra high efficiency condensing mode operation within a compact wall hung cabinet. The unit automatically adjusts gas and air rate according to demand to give an output in the range of 12.6kW to 44.9kW (C45 & C40P) and 14.3kW to 55.2kW (C55 & C55P). The integral Grundfos pump is automatically controlled to best match water flow rate to heat output & further increase appliance efficiency. In addition, they feature an optional connection for an outside sensor to enable the boilers inbuilt weather compensation option. Separate inputs are provided for hot water and central heating demand signals to enable different temperature levels to be set (ideal for underfloor heating systems). While the application for which the C45, C40P and C55(P) were designed is the same as those which other boilers are used, the Keston C45, C40P and C55(P) have the added advantage of very high efficiency, and small diameter plastic flue which can be extended up to 45 metres horizontally or vertically.

The Keston C45, C40P and C55(P) uses a variable speed combustion blower to deliver a premix of gas and air to a downward firing burner in a high efficiency, single pass heat exchanger. The flue system is room sealed and fan powered. The ignition is direct spark and fully automatic. The boiler housing is **not** waterproof and should be installed in a position where it will always be dry. Combustion air is drawn from the cabinet which is connected to outside atmosphere via a small diameter plastic intake pipe. The cabinet therefore remains under negative pressure at all times the boiler is operating.

The boiler is suitable for connection to open vented or, preferably, sealed systems.

The boiler heat exchanger is made from highly corrosion resistant stainless steel in corrugated pipe form which provides massive surface area within a compact dimension. The hot combustion gases from the down firing burner pass around the stainless steel pipes imparting heat into the system water. The integral variable speed Grundfos pump within the appliance cabinet ensures the heat exchanger receives correct water flow when firing. The C45, C40P and C55(P) are not high water content boilers and do not contain the metal mass, or water volume, of a cast iron or steel boiler. These boilers are of low mass and low water content and therefore responds faster when there is a call for heat. The C45, C40P and C55(P) feature full user diagnostics, integral frost protection function, automatic pump and fan exercise in periods of inactivity, anti cycle control, dry fire protection and connections for remote lockout and run monitoring (optional accessory).

1.2 BOILER SCHEMATIC

Air is drawn into the boiler through a 50 mm muPVC (BS5255 and/or BSEN1566-1 and BSEN1329) plastic pipe or, alternatively, via a 75mm composite plastic pipe. Gas is mixed with combustion air at the inlet to the fan. The gas flow is automatically regulated by the gas valve according to the air flow generated by the fan. The gas and air are thoroughly mixed in the blower and fed into the burner located at the top end of the heat exchanger module. The gas and air mixture is ignited by a direct spark ignition control system and burns with a blue flame just off the surface of the burner. As the hot products of combustion pass downwards, they are cooled by exchanging heat with the circulating water which enters the heat exchanger at the bottom of the heat exchanger. The optimum heat input is detected by monitoring flow and return temperatures and is adjusted by controlling the speed of the fan. The optimum pump speed is also detected and automatically selected by the boiler.

When the return water temperature is below 55°C, part of the water vapour in the combustion products will condense inside the heat exchanger, thus increasing the boiler efficiency further by releasing the latent heat of condensation. This condensate falls to the bottom of the heat exchanger where it is separated from the flue gases and exits from the boiler through the condensate drain. Any condensate formed in the flue runs back down

the flueway and is drained at the base of the flue connection to the heat exchanger or drain points within the flue.

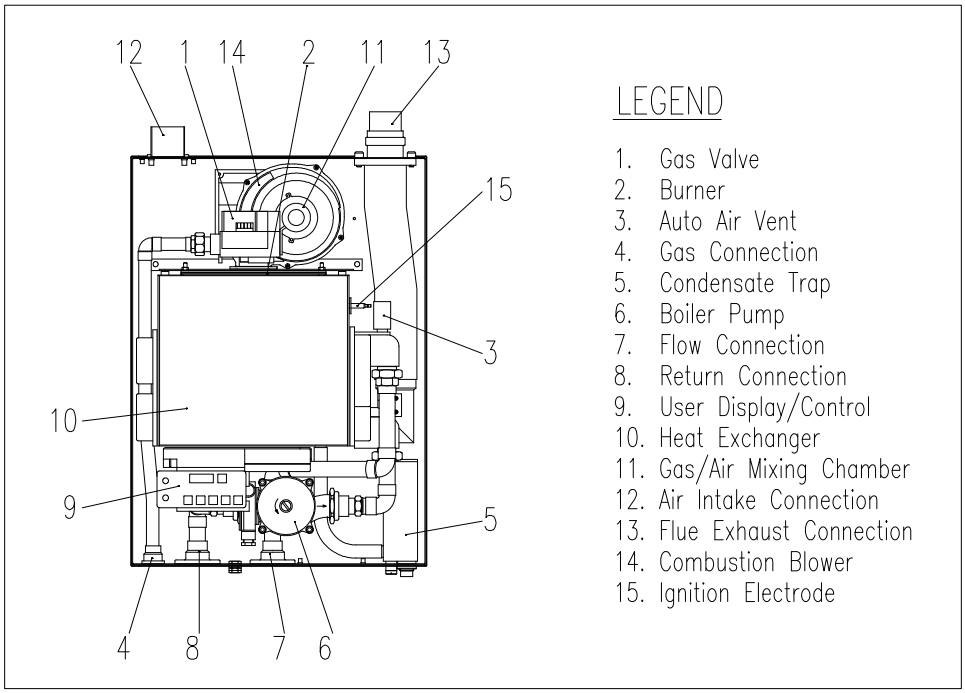

Fig. 1.2 - Boiler Layout

The condensate is very slightly acidic (about the same acidity as vinegar) and should be piped in a plastic pipe. It is not harmful to the waste disposal system and may be disposed of as normal waste water.

The flue gases are piped in a 50 mm muPVC (BS5255 and/or BSEN1566-1 and BSEN1329) plastic or, alternatively, 75mm composite plastic pipe to the outside. The temperature of the flue gases are usually around 5°C to 10°C above the temperature of the return water. The flue pipe should be terminated outside the building from where they cannot re-enter the building or any other adjacent building.

The heating level may be controlled by room thermostats, hot water calorifier thermostats, programmer time clocks and energy management systems. A Keston room controller can be connected which will provide enhance controls such as room compensation and optimum start to further increase efficiency and comfort levels.

The C45, C40P and C55(P) feature an integral frost protection function which will operate the pump, regardless of the external controls, should the boiler temperature fall below 7°C. In the event the boiler temperature falls below 3°C the boiler will also fire. This is to avoid damage to the boiler through freezing of boiler water. The boiler will turn off when the flow temperature exceeds 10°C.

The C45, C40P and C55(P) feature an integral pump exercise function which will run the pump, without firing the boiler, for 10 seconds in the event the boiler is on standby for in excess of 24 hours without firing. This is to help prevent seizing of the pump due to long periods of inactivity.

1.3 RELATED DOCUMENTS

The Keston C45, C40P and C55(P) Condensing Boiler must be installed in accordance with the current issue of the *Gas Safety (Installation and Use) Regulations 1996*, current *IEE Wiring Regulations*, *Building Regulations*, *Building Standards (Scotland) Consolidation*, and the *Bye Laws of the local Water Undertaking*.

In addition, due account must be taken to the following Codes Of Practice:

BS 6891	:	*Low Pressure Installation Pipes*
BS 6798	:	*Installation of Gas Fired Hot Water Boilers of Rated Input Not Exceeding 70kW*
BS 5449	:	*Installation Pumped Central Heating*
BS 5546	:	*Installation of Gas Hot Water Supplies for Domestic Purposes (2nd family gases)*
BS 5440.1	:	*Flues (for gas appliances of rated input not exceeding 70kW)*
BS 5440.2	:	*Air Supply (for gas appliances of rated input not exceeding 70kW)*
BS 5482.1	:	*Domestic Propane and Butane Burning Installations*
BS 7074.1	:	*Expansion Vessels*
BS 7593	:	*Treatment of Water in Hot Water Central Heating Systems*
BS 7671	:	*Requirements for Electrical Installations. IEE Wiring Regulations 16th Edition.*
BSEN 12828:2003	:	*Heating Systems in Buildings: Design for water based heating systems*
BSEN 12831:2003	:	*Heating Systems in Buildings: Method for calculation of design heat load*
BSEN 14336:2004	:	*Heating Systems in Buildings: Installation and commissioning of water based heating systems*

For Timber Framed Buildings, British Gas Publications DM2. Also *British Gas Publications 'Guidance Notes For The Installation Of Domestic Gas Condensing Boilers'* and *'Specification For Domestic Wet Central Heating Systems'.*

1.4 PHYSICAL DATA - C45 and C55

Cabinet Height	mm	720
Cabinet Width	mm	520
Cabinet Depth	mm	320
Top Clearance	mm	150
Side Clearance	mm	25
Base Clearance	mm	150
Front Clearance (for servicing)	mm	305
Weight - Full	kg / (lbs)	70.5/(157.8)
Weight - Empty	kg / (lbs)	61.5/(135.8)
Flow and Return Connection		Rp 1" F
Gas Connection		Rp 0.75" F
Condensate Connection	mm	22mm plastic overflow
IP Rating		IP20 (IPX0)
Flue and Air Intake Material	50mm muPVC (BS5255 and/or BSEN1566-1 and BSEN1329)	
Flue Pipe Size (nominal bore)	mm / (in)	50 / (2)
Air Intake Pipe Size (nominal bore)	mm / (in)	50 / (2)
Max. Air Intake Length	m	29
Max. Flue Outlet Length	m	15
Max. Total Flue Outlet and Air Intake Length	m	30
Flue and Air Intake Material	75mm Keston Composite	
Flue Pipe Size (nominal bore)	mm / (in)	75 / (3)
Air Intake Pipe Size (nominal bore)	mm / (in)	75 / (3)
Max. Air Intake Length	m	87
Max. Flue Outlet Length	m	45
Max. Total Flue Outlet and Air Intake Length	m	90

1.5 PERFORMANCE DATA - C45 & C40P

		C45	C40P
Nat. Gas (G20)	**LPG (G31)**		
Min. Input (Gross CV)	kW/(Btu/h)	12.9/(43,900)	12.6/(43,000)
Max. Input (Gross CV)	kW/(Btu/h)	45.6/(155,600)	43.2/(147,400)
Max. Output To Water			
(80/60°C Flow/Return)	kW/(Btu/h)	40.3/(137,600)	39.1/(133,300)
(50/30°C Flow/Return)	kW/(Btu/h)	44.9/(153,400)	43.2/(147,400)
Min. Output To Water			
(80/60°C Flow/Return)	kW/(Btu/h)	11.3/(38,500)	11.4/(38,800)
(50/30°C Flow/Return)	kW/(Btu/h)	12.6(43,000)	12.6(43,000)
Max. Burner Press.-Hot *(Factory Preset)*	mbar/(in w.g)	0	0
Gas Consumption After 10 mins	l/s / (Ft^3/hr)	1.21/(153.4)	0.451/(57.4)
Max. Operating Flow Temp.	°C	82.00	82.00
Max. Head (Open Systems)	m / (ft)	30.50 / (100)	30.50 / (100)
Max. Press. (Sealed System)	bar	2.70	2.70
Min. Head (Open Systems)	m	3.0	3.0
Inlet Gas Pressure	mbar/(in w.g)	20.0 / (8.0)	37.0/(14.8)
Recommended Temp Diff.	°C	8 to 20	8 to 20
Electrical Supply		230V 50Hz	230V 50Hz
Power Consumption (Max)	W	260	260
Power Consumption (Standby)	W	8	8
Type of Gas		G20 Natural Gas	G31 LPG
Optimum Flue Gas CO_2 Level	%	8.3 ±0.2	9.9 ±0.2
Expected CO/CO2 Ratio (at max rate)		0.001	0.0013
Destination Countries		GB/IE	GB/IE
SEDBUK Efficiency		90.4%	92.5%

1.6 PERFORMANCE DATA - C55 & C55P

		C55 Nat. Gas (G20)	C55P LPG (G31)
Min. Input (Gross CV)	kW/(Btu/h)	14.3/(48,800)	14.8/(50,500)
Max. Input (Gross CV)	kW/(Btu/h)	56.5/(192,800)	53.4/(182,300)
Max. Output To Water			
(80/60°C Flow/Return)	kW/(Btu/h)	49.7/(169,700)	48.0/(163,900)
(50/30°C Flow/Return)	kW/(Btu/h)	55.2/(188,500)	53.4/(182,300)
Min. Output To Water			
(80/60°C Flow/Return)	kW/(Btu/h)	12.5/(42,900)	12.9/(44,100)
(50/30°C Flow/Return)	kW/(Btu/h)	14.3/(48,800)	14.8/(50,500)
Max. Burner Press.-Hot *(Factory Preset)*	mbar/(in w.g)	0	0
Gas Consumption After 10 mins	l/s / (Ft^3/hr)	1.50/(190.1)	0.54/(68.3)
Max. Operating Flow Temp.	°C	82.00	82.00
Max. Head (Open Systems)	m / (ft)	30.50 / (100)	30.50 / (100)
Max. Press. (Sealed System)	bar	2.70	2.70
Min. Head (Open Systems)	m	3.0	3.0
Inlet Gas Pressure	mbar/(in w.g)	20.0 / (8.0)	37.0/(14.8)
Recommended Temp Diff.	°C	8 to 20	8 to 20
Electrical Supply		230V 50Hz	230V 50Hz
Power Consumption (Max)	W	260	260
Power Consumption (Standby)	W	8	8
Type of Gas		G20 Natural Gas	G31 LPG
Optimum Flue Gas CO_2 Level	%	8.8 ±0.2	10.2 ±0.2
Expected CO/CO2 Ratio (at max rate)		0.001	0.0013
Destination Countries		GB/IE	GB/IE
SEDBUK Efficiency		90.2%	92.2%

Keston Boilers Ltd declare that there are no substances harmful to health within the appliance or used during the production of the appliance.

The C45 and C55 are intended for domestic and commercial EMC environments and on a governed G20 meter supply.

The C40P and C55P is intended for domestic and commercial EMC environments and on a governed G31 supply.

Seasonal Efficiency (SEDBUK) = 90.4% (C45), 92.5% (C40P), 90.2% (C55) & 92.2 (C55P)
This value is used in the UK Government's Standard Assessment Procedure (SAP) for energy rating of dwellings. The test data from which it has been calculated have been certified by Advantica Technologies Ltd.

IMPORTANT
This product contains ceramic fibre boards, which although not regarded as a risk, contain ceramic fibre which may cause temporary irritation to eyes, skin and respiratory tract. The fibres are held in place by inorganic binders. Therefore as long as the boards are not disturbed they will not be released. Since the boards are non-serviceable parts there should be no risk.
To ensure that the release of fibres from these RCF articles is kept to a minimum, during installation and servicing we recommend that you use a HEPA filtered vacuum to remove any dust accumulated in and around the appliance before and after working on the appliance. When replacing these articles we recommend that the replaced items are not broken up, but are sealed within heavy duty polythene bags, and clearly labelled as RCF waste. RCF waste is classed as a stable, non-reactive hazardous waste and may be disposed at a landfill licensed to accept such waste. Protective clothing is not required when handling these articles, but we recommend you follow the normal hygiene rules of not smoking, eating or drinking in the work area and always wash your hands before eating or drinking.

This appliance is not intended for use by persons (including children) with reduced physical, sensory or mental capabilities, or lack of experience and knowledge, unless they have been given supervision or instruction concerning use of the appliance by a person responsible for their safety.
Children should be supervised to ensure that they do not play with the appliance.

BENCHMARK INITIATIVE
As part of the industry wide "Benchmark" initiative C45, C40P & C55(P) boilers manual includes **Gas Boiler Commissioning Checklist (Chapter 9)**. This form should be completed by your installer at the end of the installation and commissioning process. The details of the Checklist will be required in the event of any warranty work being required. There is also **Service Interval Record (Chapter 9)** to be completed after each annual service visit.
These forms (Chapter 9) should be kept in a safe place for the life of the boiler.

GAS SAFE REGISTER INFORMATION
The boiler should be installed and serviced only by GAS SAFE REGISTER registered operatives. All GAS SAFE REGISTER registered Installers carry a GAS SAFE REGISTER ID card and have a registration number. **Both should be recorded in your boiler manual (Chapter 9: GAS BOILER COMMISSIONING CHECKLIST).** You can check your installer by calling GAS SAFE REGISTER direct on 0800 408 5500.

1.7 OPTIONAL ACCESSORIES

A range of accessories are available from Keston Boilers Ltd to compliment an installation. Terminal wall sealing collars are available to make good the external all face whilst working from the inside of the building using 50mm muPVC (BS5255 and/or BSEN1566-1 and BSEN1329) pipe or 75mm (actual dimensions are int.dia. = 68mm, ext.dia. = 78mm) Keston Composite pipe. Stand-off frames are available to leave a 50mm gap behind the boiler to allow routing of pipes behind the boiler.

Description	Part Number
Flue Terminal Wall Sealing Collar (50mm)	C.08.0.00.07.0
Air Terminal Wall Sealing Collar (50mm)	C.08.0.00.07.0
50/75mm Flue Adapter	C.17.2.00.60.0
Flue Outlet Terminal (75mm)	C.17.2.26.00.0
Air Inlet Terminal (75mm)	C.17.2.26.00.0
Stand Off Back Plate	C.17.0.02.00.0
Keston Chronotherm Room Controller	C.17.4.21.00.0

2. BOILER LOCATION

All dimensions in mm.

2.1 DIMENSIONS AND MINIMUM CLEARANCES

The boiler must be installed in minimum clearances shown to allow subsequent servicing, and safe operation. However, larger clearances may be required during installation.

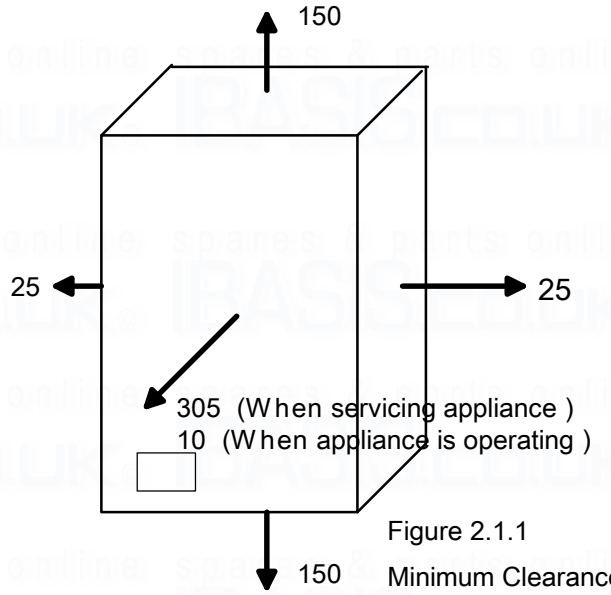

Figure 2.1.1
Minimum Clearances

2.2 SERVICE CONNECTIONS

Gas, water, air and flue pipe, condensation, and electrical connections are as shown. Gas : 0.75 inch BSP female. Flow/Return 1 inch BSP female.

An optional stand-off frame is also available which mounts behind the boiler to leave a 50mm deep space behind the boiler. This is to permit pipe routing behind the boiler if required. See Section 1.5 - Optional Accessories.

Figure 2.1.2 Dimensions

All dimensions in mm

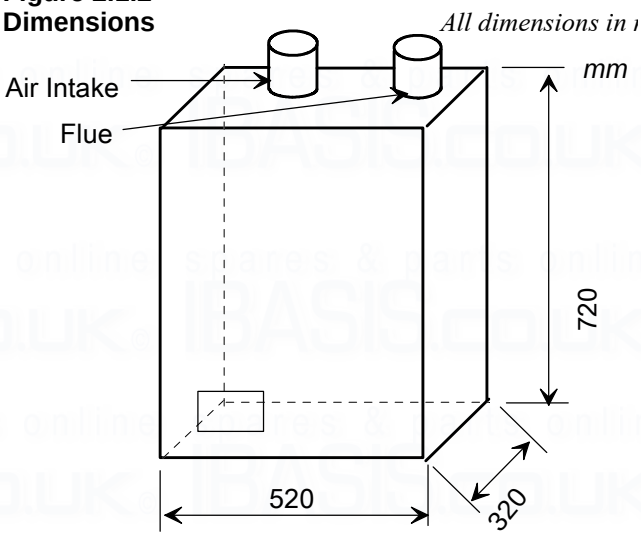

2.3 POSITION

The C45, C40P and C55(P) are not suitable for external installation. The boiler may be installed in any room or internal space, although particular attention is drawn to the requirements of the current IEE Wiring Regulations and, in Scotland, the electrical provisions of the Building Regulations applicable in Scotland, with respect to the installation of the boiler in a room or internal space containing a bath or shower.

Where a room-sealed appliance is installed in a room containing a bath or shower, any electrical switch or appliance control, utilising mains electricity, should be so situated that it

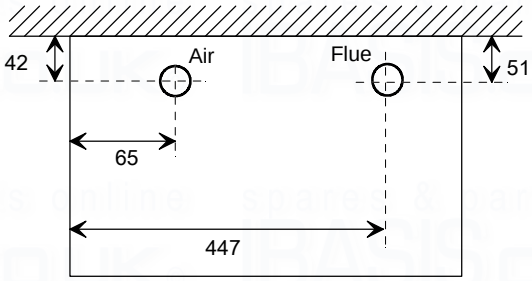

Top View

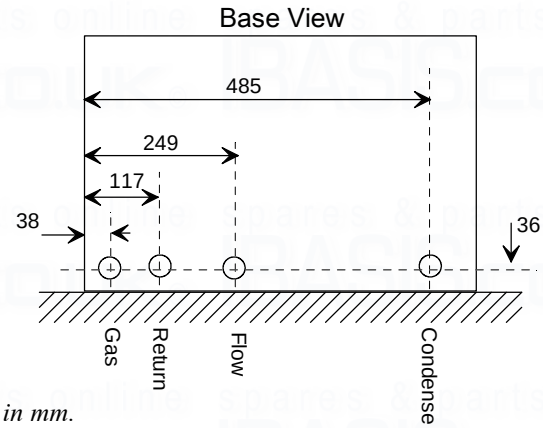

Service Connection Locations *All dimensions are in mm.*

cannot be touched by a person using the bath or shower. The C45, C40P and C55(P) are classified as IP20 (IPX0) and are therefore suitable for installation in Zone 3 areas, unless subject to hose down.
Compartment installation is permitted - such compartments must be constructed in accordance with BS 6798.
The wall on which the boiler is mounted must be of suitable load bearing capacity and must be non-combustible.

The Keston C45 and C55 can be located virtually anywhere desired provided that all

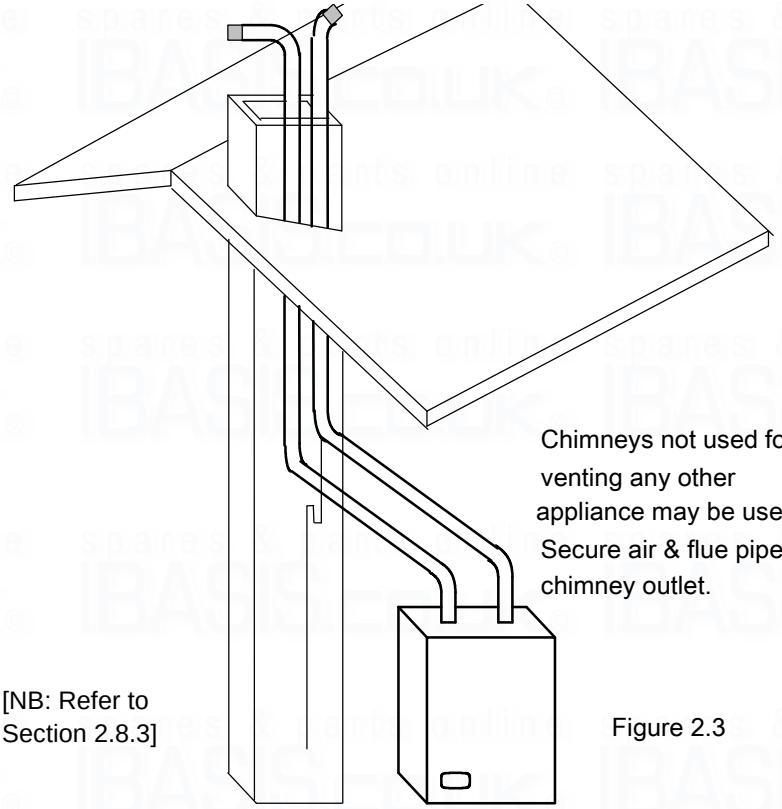

[NB: Refer to Section 2.8.3]

Figure 2.3

regulations are complied with. Because of the boiler's compact size and venting flexibility, the installation is not limited to a boiler room setting. Before locating the boiler near a living space consider whether the sounds generated by the boiler will be objectionable. The boiler may be located within a cupboard enclosure to reduce noise levels if located within a living space. LPG boilers must not be installed in a cellar.

2.4 ELECTRICAL

2.4.1 Electrical Connections

The boiler must be connected to a permanent 230V ~ 50Hz supply, fused at 3A. **The boiler has two thermostats and will therefore accept up to two switched live signal inputs at 230V, such as heating and hot water demand. For single signal systems switched live 1 may be used on its own. In the event the boiler receives a signal from both inputs at the same time the setting of thermostat 2, usually used for hot water demand, will take priority.** Wiring external to the boiler must be in accordance with current I.E.E wiring regulations and local regulations.
The method of connection to the mains electricity supply **must** facilitate complete electrical isolation of the boiler, preferably by the use of a fused, unswitched three pin plug and a shuttered socket-outlet, both complying with the requirements of

BS 1363. There must be only one common method of isolation for the boiler and its control system.
The appliance must be connected to the 3A supply via a fused double-pole switch having at least 3 mm (1/8 inch) contact separation in both poles, serving only the boiler and the system controls.
The connection point to the mains supply should be readily accessible and adjacent to the boiler, except for rooms containing a bath or a shower. Refer to section 2.3 Position.

2.4.2 External Wiring & Controls

1. The boiler is designed so that **all** control wiring is external to the boiler.
2. A programmer may be used with zone valves to give independent control of central heating and hot water.
3. A Keston Chronotherm controller may be used to provide room compensation and optimum stop/start control on heating only systems
4. Control signal inputs must the 230VAC "switched live" type.
5. A Keston outside temperature sensor may be connected as an option. The boiler will automatically detect this connection and will operate on a "weather compensation" basis when receiving a signal on switched live 1. Screened cable (80% density) must be used to connect the outside temperature sensor.

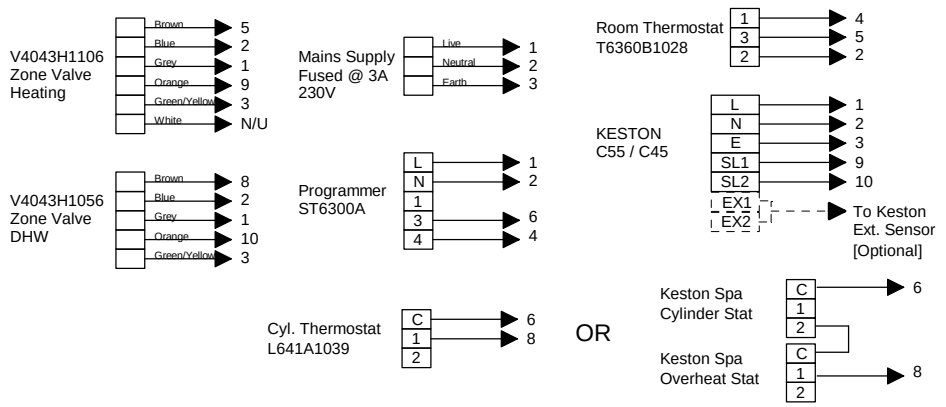

2.4.4 Wiring Expample - Honeywell S-Plan for DHW and (Optional) Weather Compensated Heating Control

2.5 BOILER SIZE SELECTION

The C45, C40P and C55(P) will automatically adjust heat output and pump speed to match the system requirements at any given time. Efficiency and combustion levels are maintained at optimum levels throughout the possible output range. The C45, C40P and C55(P) are therefore suitable for all systems with a total heat load within the maximum range of the boiler.

2.6 GAS SUPPLY

A gas meter should be connected to the service pipe by the local gas region or their contractor. An existing meter should be checked preferably by the gas region to ensure that the meter is adequate to deal with the rate of gas supply required. Installation pipes should be fitted in accordance with BS 6891.

Minimum/Maximum Gas Pressure:

Natural gas pressure before the gas valve must be maintained at between 18 mbar (7.2 in WG) and 22 mbar (8.8 in) while the boiler is running.
LPG pressure must be maintained between 31.5 mbar (12.4 in w.g) and 37.6 mbar (14.8 in w.g) while the boiler is running.

Gas pressures above or below these levels will lead to problems associated with the gas valve's internal pressure regulator.

Supply pipes to the boiler must not be sized less than the boiler inlet connection (22 mm). Due consideration must be given to the supply pressure to other gas appliances in the premises. Reduction in dynamic gas supply pressure will result in intermittent ignition failures. Ensure gas supply pipe work is adequately sized for the length of run from the meter to the boiler at a supply rate of 46kW for the C45 and 57kW for the C55 model.

A gas cock is supplied loose with the boiler. This cock should be fitted in the gas line to the boiler as close to the boiler as possible so that it is easily identified as the cock to isolate the boiler.

2.7 WATER SYSTEMS

All piping must be installed in accordance with all applicable local and Water Supply Bylaws for forced hot water heating systems.
Consideration must be given to pipe capabilities and pressure drop through the piping when selecting pipe sizes. The primary pipe connections to the boiler must be sized according to the system load, not dictated by the boiler connection sizes.
Water treatment must be carried out to BS 7593 : Treatment of Water in Hot Water Central Heating Systems.

a The C45, C40P and C55(P) are suitable for use on open, vented water systems with combined feed and vent **fitted to the boiler return**.

b It is preferable for use on sealed water systems, provided the appropriate components required (see Section 2.7.2 Sealed Systems) are included in the system.

c Any system must be thoroughly flushed clean of grease, dirt and debris, prior to connection with the boiler. A trap may be installed in the flow line to collect any solder, or other debris, from the installation.

d All water systems must be constructed to comply with requirements of the Local Water Authority.

e Always use a system complying with the requirements of BS 5449 and BS 6798.

f System design must ensure an open circuit is always available to ensure circulation when the pump overrun function is operating after boiler shutdown.

g Copper tubing to BS 2871 Part 1 or barrier plastic pipe suitable to 110 °C, such as Unipipe, is recommended.

h Jointing should be either with capillary, threaded or compression fittings. Pipes should have a gradient to ensure air is passed easily to vent points and water flows readily to drain points.

i Draining taps must be located in accessible positions which permit the draining of the boiler and hot water storage vessel. Draining taps should be at least 22 mm in nominal size and be in accordance with BS 2879.

AIR VENT POINTS

j These must be fitted at all high points where air will naturally collect and must be sited to allow complete draining of the system.

k. Where thermal stores are to be used the thermal store supplier should be consulted as to the compatibility of the thermal store with a Keston C45, C40P and C55(P). Thermal store units where the boiler directly heats an open vented thermal store are not suitable for use with the C45, C40P or C55(P).

2.7.1 Open Vented Systems

A typical system is shown in Figure 2.7.1 which includes a combined feed and vent. **Note that the combined feed and vent must be fitted to the primary RETURN.** A safety valve is specified for the primary flow to ensure discharge path at all times in the event the feed/vent connection is isolated from the boiler flow [see 2.7.2(i)]. However, in the event the system is configured with no isolation valve on the primary flow and wired such the boiler cannot fire when all zone

Figure2.7.1 : Open Vented System I

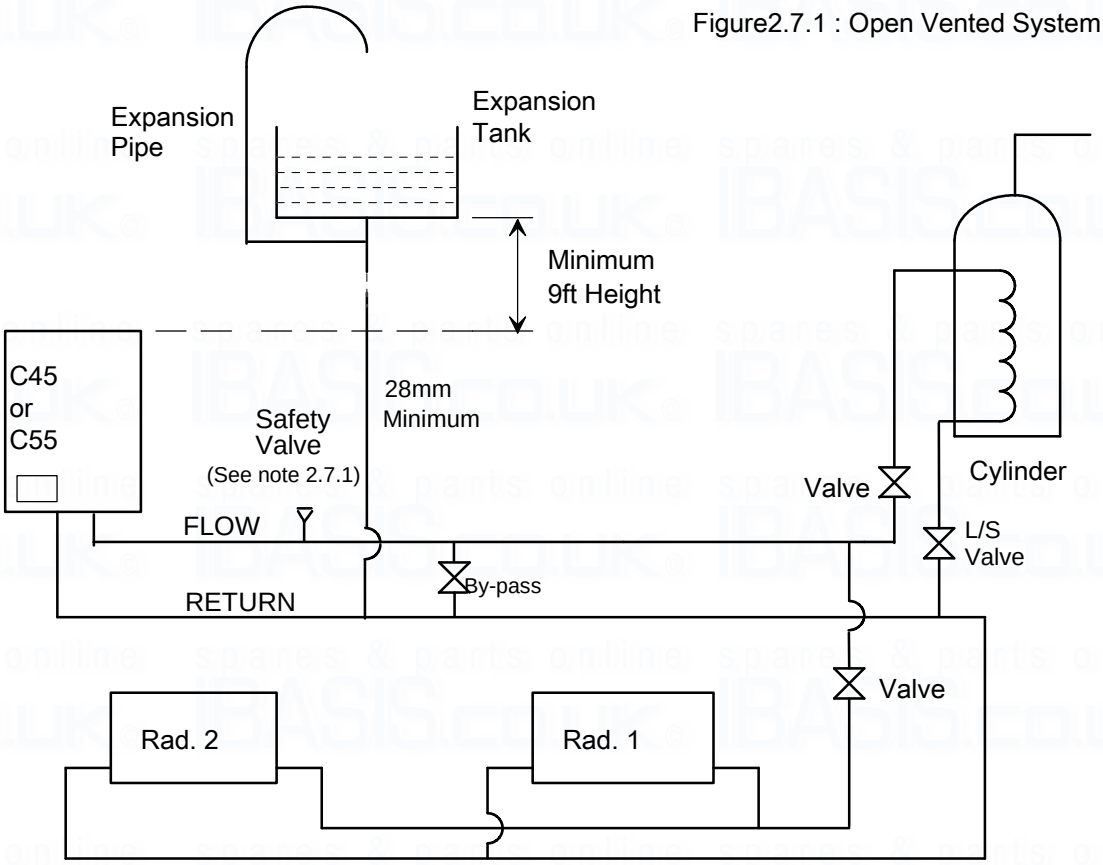

valves are closed, then the safety valve may be omitted. Note that the minimum static head required is 9 ft at the top of the boiler.

Although suitable for open vented systems with combined feed and vent arrangements, the C45, C40P and C55(P) are low water content boilers. As such, any air entrainment within the system water will produce boiler "kettling". It is therefore recommended, if in any doubt, to consider the use of sealed systems where possible.

2.7.2 Sealed Systems

Sealed systems must be designed in accordance with BS 5449 and BS 7074 Pt1. A typical sealed system is shown in Figure 2.7.2. It must include :

(i) A safety valve fitted on the flow, adjacent to the boiler. It must be non adjustable and preset to 3 bar. A drain pipe must be attached, at least as big as the valve connection, and routed to drain in any area not hazardous nor where it may be subject to freezing.

(ii) An expansion vessel complying with BS 4814 and sized in accordance with the requirements of BS 5449 and BS 7074 Pt 1. **The vessel must be positioned on the primary return to the boiler.** Table 2.7.2 Expansion Vessel Selection provides guidance for the correct expansion vessel size to use.

(iii) A filling point, in accordance with local water authority requirements.

(iv) A method of system make-up (automatic or manual), in accordance with local water authority requirements.

(v) There must be no permanent connection of mains water to the boiler system.

(vi) The installation must be designed to work with flow temperatures of up to 110 °C.

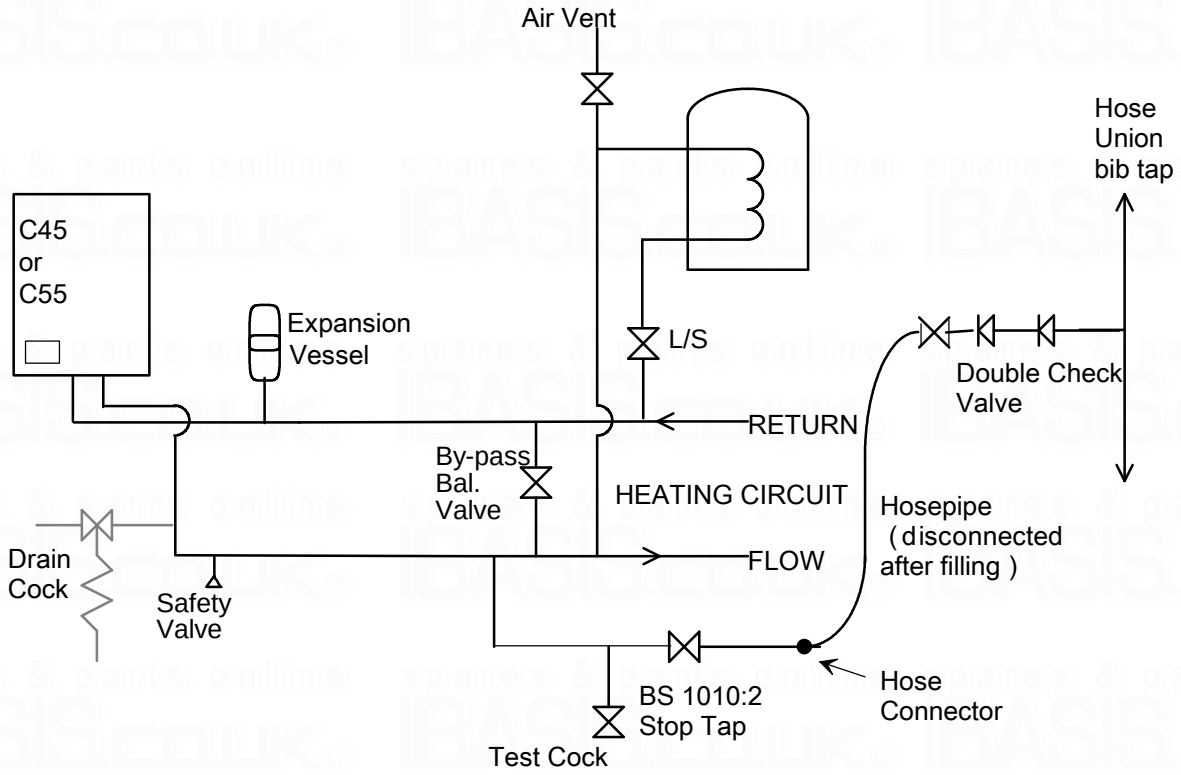

Figure 2.7.2 : Sealed System Diagram

All components of the system including the heat exchanger of the indirect cylinder must be suitable for a working pressure of 3 bar and a temperature of 110 °C. Care should be taken in making all connections that the risk of leakage is minimised.

Safety Valve Setting	3.0 bar		
Vessel charge & initial system pressure.	0.5 bar	1.0 bar	1.5 bar
Total Water Content of system	**Expansion**	**Vessel**	**Volume**
25 litres	2.1	2.7	3.9
50 litres	4.2	5.4	7.8
75 litres	6.3	8.2	11.7
100 litres	8.3	10.9	15.6
125 litres	10.4	13.6	19.5
150 litres	12.5	16.3	23.4
175 litres	14.6	19.1	27.3
200 litres	16.7	21.8	31.2
225 litres	18.7	24.5	35.1
250 litres	20.8	27.2	39.0
275 litres	22.9	30.0	42.9
300 litres	25.0	32.7	46.8
Multiplying factor for other system volumes	0.0833	0.109	0.156

Table 2.7.2 Expansion Vessel Selection

2.7.3 Hot Water System (if applicable)

The hot water storage vessel must be of the indirect type (certain direct cylinders can be used provided they are suitably adapted by fitting an immersion calorifier). DIRECT CYLINDERS MUST NOT BE USED. Further guidance is provided in BS 1394. It is advisable to fit a locksheild valve on the cylinder return to enable balancing of the flow rate through the cylinder.

The Keston Spa range of stainless steel unvented cylinders are an ideal option for use with the Keston range. The Keston Spa range combine exceptional recovery times with durable, long life stainless steel construction and all associated controls. Contact Keston Boilers Ltd for information

2.7.4 Boiler By-pass Piping

Boiler water flows are critical to the operation of the boiler. If flow cannot be maintained through the system piping to meet the minimums required by the boiler, insufficient water flows through the boiler will cause the boiler to "kettle" or even produce steam which can damage the heat exchanger and will invalidate the heat exchanger warranty. In addition, an open circuit is required after boiler shutdown to permit circulation during the boilers 2 minute pump overrun sequence.

It is normally advisable to incorporate a boiler by-pass in the system, especially if thermostatic radiator valves are used. The flow/return differential should be 10°C to 20°C. **To comply with the new Building Regulations Part L1 the bypass must of the automatic type.**

2.7.5 Balance Headers - Multiple Boiler Installations

Where multiple boilers are installed on a common distribution system maintenance of balanced flow through each boiler is extremely important. The implementation of a balance header, as detailed below, is recommended to ensure adequate and balanced water circulation is maintained by each boilers integral shunt pump, irrespective of system conditions.

The size of the balance header is dependant on the number of boilers serving the header. A guide to sizing is given below:

Total Boiler Output (Max)	Header Diameter
Up to 110kW	3”
Up to 220kW	4”
Up to 330kW	4.5”
Up to 440kW	5”

When assembling the balance header the following design considerations must be observed:

A) Each boiler must have its own flow and return connections to the balance header pipe. Common flow and return connections with the other boilers will cause reverse circulation effects to occur.

B) The minimum distance between the system flow and return connections is 600mm.

C) A drain off point should be fitted to the base of the header, along with cleaning access, for sludge removal.

D) The top of the header should be vented.

2.7.6 Air Elimination

In the initial charge of water to the boiler system and in all subsequent additions of water to the system some air will be dissolved in the water. As the water is heated the air is driven out of the solution and will collect in high spots in the system. **These air bubbles can interfere with pumping and heat transfer and must be eliminated.**

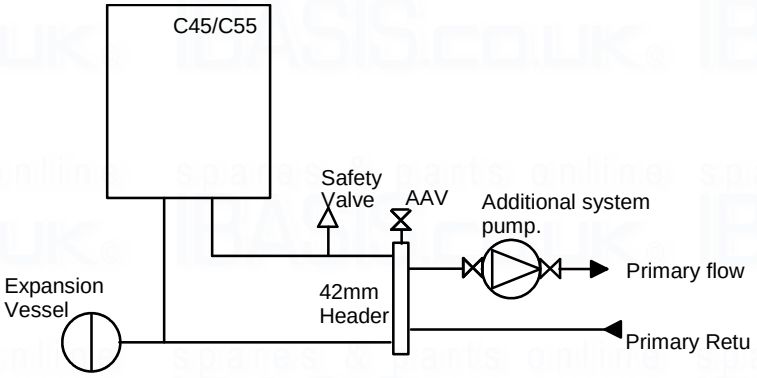

Installation of air bleed valves at the high spot(s) in the system will allow for air elimination when filling the system and will allow re-venting in a day or so after all air has been driven out of solution.

2.7.7 System Pump Selection (if required)

The C45, C40P and C55(P) feature an integral circulating pump which has sufficient excess head to drive most domestic systems. The available head is indicated in the chart below. If the system index circuit resistance, at the desired flow rate, is in excess of the available head from the integral pump an additional system pump will be required.

The schematic above illustrates a recommended approach to using an additional system pump. The additional system pump should be sized to overcome the index circuit resistance only as the boilers integral pump will overcome boiler resistance.

If an additional pump is required the selected pump must comply with BS 1394.

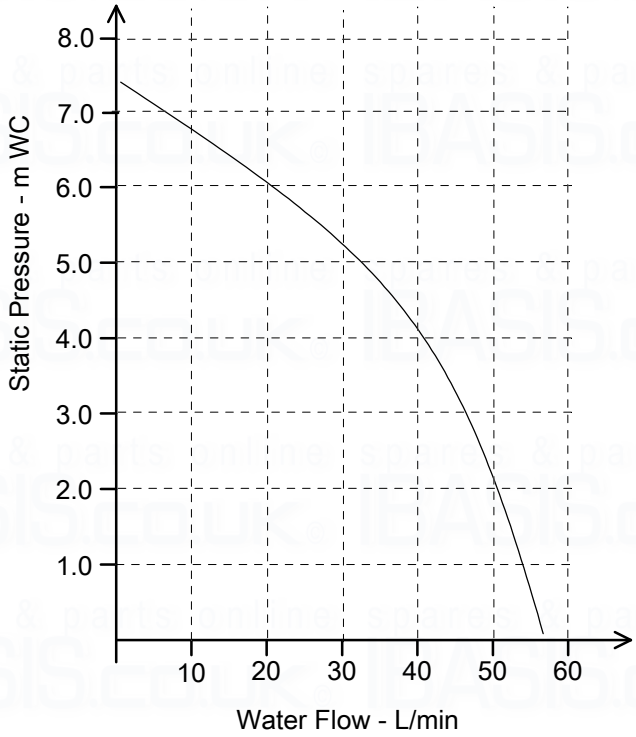

Fig 2.7.7 Available Pump Head Graph

2.8 FLUE SYSTEM

2.8.1 Design

Individual air supply and flue outlet pipes are used. The material used for flue outlet &/or air inlet must be **muPVC** to BS5255 and/or BSEN1566-1 and BSEN1329 of an internal diameter of 51 mm. (i.e. nominal 50 mm diameter muPVC solvent weld waste pipe). Marley muPVC Solvent Weld Waste System (50mm) and Polypipe System 2000 muPVC Solvent Weld Waste (50mm) are recommended systems. **DO NOT USE ABS PIPE OR FITTINGS.**

Alternatively, where flue or air intake lengths of up to 45m are require, Glynwed Friatec DN70 pipe may be used.
Both 50mm flue outlet terminal and 50mm air inlet terminal are supplied and are illustrated in Figure 2.8.1. Both terminals are identical. The flue and air terminals must be fitted to the appropriate duct using solvent weld adhesive. If 75mm terminals are required these can be obtained from your Keston Boilers stockist. Request part numbers C.17.2.26.00.0 (terminals) and C.17.2.00.60.0 (50 to 75 adapters).

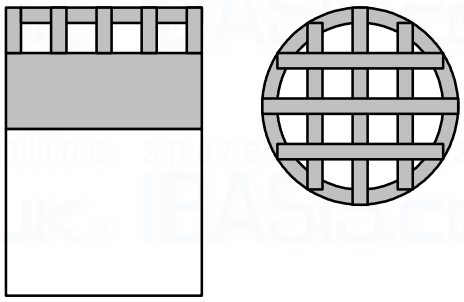

Flue Outlet/Air Inlet Terminals

Figure 2.8.1 : Terminals

2.8.2 Maximum Lengths

The maximum lengths of both air inlet pipe and flue outlet pipe, when no bends are used, are as detailed below.

		50mm	75mm
Maximum Air Inlet Length	:	29.0 m	89.0 m
Maximum Flue Outlet Length	:	15.0 m	45.0 m
Maximum Total Flue and Air Intake Length	:	30.0 m	90.0 m

However, each bend used has an equivalent length that must be deducted from the maximum straight length stated above. Knuckle bends must not be used.

A 92.5° sweep elbow is equivalent to 1.0m straight length.

Example (assuming 50mm muPVC flue and air pipework):

Air inlet uses two 92.5° sweep elbows. Hence, maximum length permissible (i.e. a+b in figure 2.8.2) = 29.0m - 1.0m - 1.0m = 27.0m

Flue outlet uses one 92.5° sweep elbow. Hence, maximum length permissible (i.e. c+d in figure 2.8.2) = 15.0m - 1.0 m = 14.0m

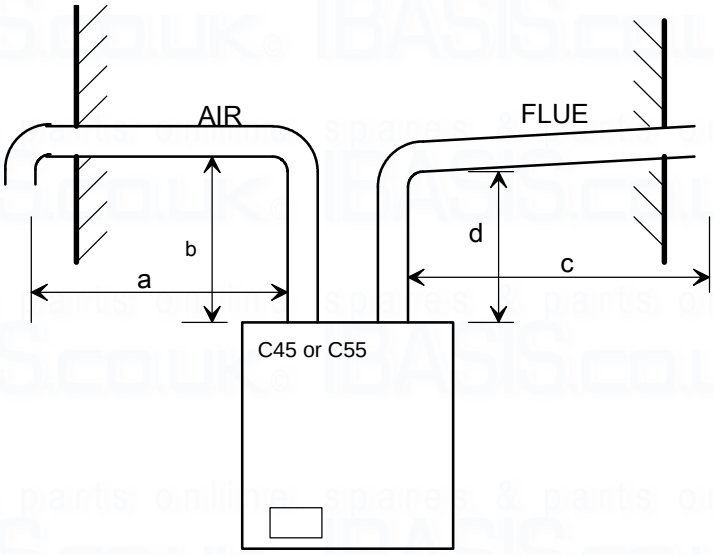

Figure 2.8.2 : Flue & Air Maximum Length Example

2.8.3 Boiler Output vs Flue Length

Due to the resistance presented by extended flue length a slight reduction in maximum boiler output will occur where flue lengths in excess of 8m (50mm muPVC), or 24m (Friaphon DN70) are used. In such cases the boiler output will be reduced by 1% per additional 1m (50mm muPVC) and 1% per additional 3m (Friaphon DN70).

2.8.4 Slope

'Horizontal' flue outlet pipework MUST slope at least 3.5 degrees (61 mm per metre run) downwards towards the boiler where 50mm muPVC pipe is used. In the event 75mm Friatec pipe wise used a slope at least 2 degrees (35mm per metre run) can be used. Pipework can be vertical. Only swept elbows can be used.

Air inlet pipework can be truly horizontal or vertical, or sloping in a downward direction towards the boiler but in this case rain, etc., **must** be prevented from entering the pipe. **There must be no troughs in any of the pipework, whether it be air inlet or flue outlet.**

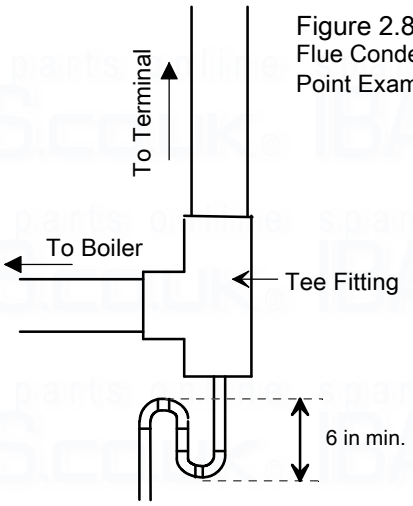

Figure 2.8.3 : Flue Condensate Drain Point Example

Due the low temperature of the flue gases further condensate will form within the flue system. Drain points, with suitable traps, must therefore be incorporated within the flue system at the base of vertical flue sections in excess of 3m, for 50mm muPVC pipe flue systems. These additional condensate drains must be run to discharge as detailed in section 2.11. Such drain points can be formed using standard plastic fittings. Refer to the example in Figure 2.8.3.

2.8.5 Terminations

Air inlet terminals must be facing horizontally or downwards to prevent entry of rain into the terminal and positioned to ensure only fresh air is drawn into the boiler. The air terminal must be located outside of the building.

Drawing of combustion air directly from a ventilated boiler room invalidates the heat exchanger warranty.

The flue outlet terminal is designed to face outwards but can, if desired, be adapted to face in any direction **BUT** must not be directed in the region of the air inlet.

The two terminals are subject to the requirements of BS 5440 Pt 1 for clearances from features of the building although some can be decreased to the values indicated.

The Keston C45, C40P and C55(P), as with any condensing boiler, will generate a condensate "plume" from the flue terminal in all weather conditions. Consideration must therefore be given to the effect of this "plume" when selecting a location for the flue terminal.

It is advisable for horizontal flue terminals to place a 45º elbow at the end of the flue to direct the condensate plume up and away from the property.

Dimensions (mm)	Flue Terminal	Air Inlet
A Below or beside openable window, air brick, etc.	300	50
B Below gutters, soil pipes, drain pipes.	75	75
C Below eaves (unventilated)	200	50
D Below balconies or car port roof.	200	50
E From vertical drain or soil pipes.	75	50
F From internal or external corner or boundary lines	200	50
G Above ground or balcony or roof.	200	100
H From surface or boundary line facing a terminal	600	100
I From terminal facing a terminal.	1,200	1,200
J From opening in a car port.	1,200	100
K Vertically from terminal on same wall.	1,500	1,500
L Horizontally from terminal on same wall.	300	300

Table 2.8.5 Minimum Flue Terminations & Air Inlet Dimensions

2.8.6 Clearances From Wall

Flue outlet and air inlet terminations must be at least 40 mm from the wall face.

2.8.7 Distance Between Flue Outlet & Air Inlet

There is no maximum - the terminations must not be on opposite sides of the dwelling but can be in areas of unequal pressure

A minimum clearance of at least 300mm must be left between the terminations and the flue terminal must be directed away from the air intake terminal.

2.8.8 General Installations

All parts of the system must be constructed in accordance with BS 5440 Part 1, except where specifically mentioned in these instructions.

All pipe work must be adequately supported.

All joints other than push-on or plastic compression connectors must be made and sealed with solvent cement suitable for muPVC pipes and conforming to BS 6209: 1982.

Consideration must be given to Corgi/Gas Safe bulletin TB200/TB008 regarding flues in voids.

The boiler casing must always be correctly fitted to the boiler when leaving the appliance operational.

External wall faces and any internal faces of cavity walls must be made good. For 50mm muPVC terminals, rubber collars are available for flue and air terminals to finish the external wall face around the terminals (Part No C.08.0.00.07.0)

2.9 AIR SUPPLY

The C45, C40P and C55(P) are room sealed appliances and therefore do not require purpose provided ventilation to the boiler room for combustion air.

2.10 COMPARTMENT INSTALLATION

The C45, C40P and C55(P) models operate with very low heat emission levels. As a results the boilers can be installed in a compartment without ventilation.

2.11 CONDENSATE DRAINAGE

Being a condensing boiler, the C45, C40P and C55(P) are fitted with a condensate trap at the base of the heat exchanger and flue assembly, with facility to connect to a drain point underneath the appliance.

The connection to the boiler condensate outlet and the condensate discharge pipe work within the dwelling must be sealed.

Use only plastic piping and do not reduce below 15 mm internal diameter within the dwelling. Condensate should preferably be drained into the sanitary waste system or, alternatively, the rainwater system of the property in most cases. Ensure in all cases that the disposal of the condensate is in accordance with any local regulations in force.

Termination of the pipe must be either at a branch or stack internal to the house, or externally at an open gully. Alternatively, discharge into a purpose made condensate soakaway can be considered. Existing or purpose built drains must use suitable corrosion resistant material as condensate is mildly acidic.

A minimum slope downwards towards the drain of 1 in 20 is essential. Freezing of the termination and pipework must be prevented. Any drainage pipes outside the property must be at least 32 mm *inside* diameter.

3. INSTALLATION OF THE BOILER

Read Chapter 2 - Boiler Location and decide upon the position of the boiler.

Installation of the boiler is straightforward but consideration must be given to access to allow flue and air pipes to be pushed through walls and ceilings. The order in which the components are installed will depend upon particular site conditions, but in general it will be easiest and most accurate to install the boiler and then build up the flue outlet and air inlet pipes to the terminal - this is the sequence described.

3.1 WALL MOUNTING BRACKET

a Place the bracket on the wall horizontally with the pre-drilled holes at the bottom and position as dictated by the template supplied within the boiler packaging.

b Drill through the centre hole of the bracket, plug the hole and fix in position.

c Using a spirit level make sure the bracket is completely level and mark the position of the other screw holes.

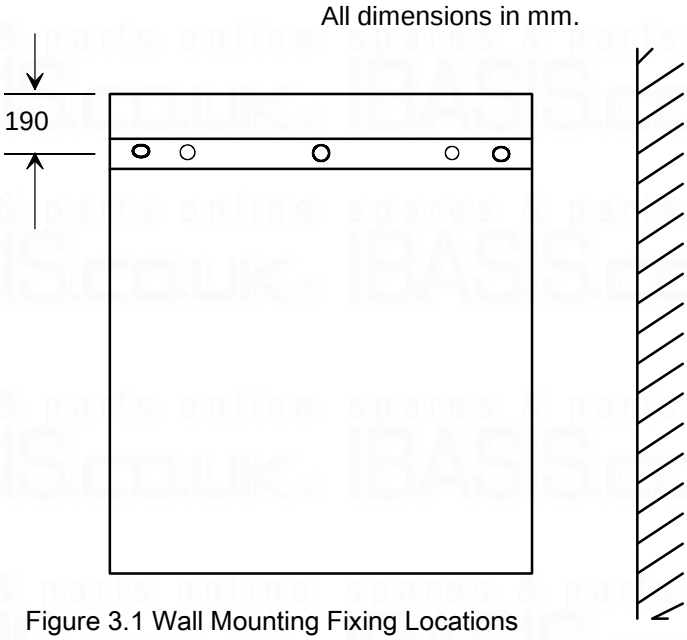

Figure 3.1 Wall Mounting Fixing Locations

d Remove the bracket and drill the holes in the positions marked. Plug these holes.

e Screw the bracket to the wall using screws of an appropriate size for the wall type (No. 12 x 2 inch wood screws normally suffice).

3.2 MOUNTING THE BOILER

a Lift and locate the boiler in the studs protruding from the wall bracket.

b Fix the boiler on the bracket studs using the nuts and the washers supplied.

3.3 ASSEMBLY PRACTICE

Remove all plastic debris and burrs when installing air intake piping. Plastic filings caused by cutting muPVC pipe must not be allowed to be drawn into the combustion air blower. Prevent dust entering the air intake when cutting on building sites. Blower failure which is determined to be caused by plastic filings or other debris will not be covered by guarantee.

3.4 INSTALLING FLUE AND AIR PIPES

WHEN INSTALLING A REPLACEMENT BOILER, A NEW FLUE SYSTEM MUST BE FITTED. DO NOT RE-USE THE ORIGINAL FLUE SYSTEM.

NB: When installing the boiler for the first time or ever, assemble the flue spigot with the flue spigot nipple (50mm muPVC - see the accessories bag).

Remember the flue pipe must slope downwards back towards the boiler and this is best achieved using 92.5° bends.

a Using the template supplied within the boiler packaging mark the positions of the two holes for the flue and air pipes on the wall(s) or ceiling.
b Drill the two holes in the wall/ceiling, preferably using a core drill.
c Measure, cut and check the air and flue pipes to pass to the exit from the wall(s) or ceiling.

Always thoroughly deburr all pipes and, most important, remove shavings from within the pipe.

d Mount the boiler on the wall bracket and fix the flue and air spigots (packed loose with the boiler and with appropriate gaskets) to the boiler flue and air outlet connections (the flue spigot incorporates a combustion test plug) tightly to ensure there is no leakage. Assemble, using adhesive, the pipework from the boiler connections to the exit from the first wall/ceiling (remount the boiler if removed). When pushing pipe through walls, ensure grit and dust is not allowed to enter the pipe.
Ensure pipes are fully engaged into sockets.
Connect the condensate drainage system and fill the condensate trap by pouring water down the boiler flue spigot (See Section 3.5 Condensate Drainage).
e Using the same methods drill any further holes (always covering existing pipework), cut and assemble the pipework.
f From outside, complete the two terminations - See Section 2.8 Flue System and make good all holes.
g Support any pipes whose route could be displaced either of its own accord or by accident. Any horizontal run over 1m or vertical runs of any length must always be supported. Brackets should be placed at intervals of approximately 1m.
h Check all connections for security and re-seal any joints using solvent cement where soundness may be in doubt.

Note: It is equally important to seal the air inlet with solvent cement as the flue outlet pipe joints.

3.5 CONDENSATE DRAINAGE

NB: When installing the boiler for the first time or ever, consider:

Condensate Trap Assembly
The condensate trap is fitted loose inside the cabinet.
i) remove the nut from the condensate trap spigot;
ii) fit the condensate trap through the two holes in the bottom of the frame;
iii) replace the nut from the frame bottom

Connect the condensate drainage system to the boiler. It is advisable to use a detachable fitting at connection to the boiler to enable easy removal for servicing.
Fill the condensate trap by pouring water into the boiler flue spigot until water is seen to flow freely from the condensate drainage system. Make the final connection of flue pipe to the boiler.

Details are provided in Chapter 2 - Section 2.11 Condensate Drainage
Connection : 22 mm plastic pipe.

3.6 WATER SYSTEM

Connect the flow and return pipework to the boiler. Details of system requirements are given in Chapter 2 - Section 2.7 Water Systems.

Connections : 1" BSPF

For optimum performance after installation, this boiler and its associated central heating system must be flushed in accordance with the guidelines given in BS7592:1992, "Treatment of water in domestic hot water central heating systems".
This must involve the use of a proprietary cleaner, such as Fernox Superfloc, or BetzDearborn's Sentinel X300 or X400. Full instructions are supplied with the products, but for immediate information, please contact Fernox on 01799 550811 or BetzDearborn on 0151 420 9563.
For long term protection against corrosion and scale, after flushing, it is recommended that an inhibitor such a Fernox MB1 or BetzDearborn's Sentinel X100 is dosed in accordance with the guidelines given in BS7593:1992.

3.7 GAS SUPPLY

Connect the gas supply to the appliance. Details of gas supply requirements are given in Chapter 2 - Section 2.6 Gas Supply. Supply of adequate gas pressure **(with the boiler running)** is critical to ensure reliable operation of the boiler.

Connections : 0.75 inch BSPF.

3.8 ELECTRICAL SUPPLY

The entry point(s) for the electrical supply cable(s) is in the base of the appliance (see Section 2.2 Service Connections fig. 2.1.2) via two cordgrip bushes. Feed the cable(s) through its bush and route inside the cabinet to the connection strip located to the front bottom left of the cabinet.

1. The electrical supply must be as specified in Chapter 2 - Section 2.4 Electrical Supply.
   WARNING : THIS APPLIANCE MUST BE EARTHED.
2. All external controls and wiring must be suitable for mains voltage. Supply wiring should be in PVC insulated cable not less than 1.0mm^2 to BS 6500 Table 16 (material code H05VV-F).
3. The permanent live supply connection may be via a 3 amp fused double pole switch, serving only the boiler. (Refer to Chapter 2 - Section 2.4 Electrical Supply). The system controls for the boiler must also be supplied via this isolator.
4. Securely tighten the terminal screws and route the cable(s) through the re-openable cable clips. Ensure all cables are secured and that the cord grip bush is tightened to securely grip the main cable at entry to the cabinet. Remove the factory fitted link wire between the room thermostat terminals on the boiler.
   The supply cable(s) must be connected to the main terminals as follows:-

N	-	Blue wire (Neutral) for 3A permanent
L	-	Brown wire (Live) 3A permanent supply
⏚	-	Yellow/Green Wire (Earth)
SL1	-	230V Switched Live Signal 1 - Room Thermostat
SL2	-	230V Switched Live Signal 2 - DHW Thermostat
1,2&E	-	Optional outside temperature sensor for weather compensation.
3,4	-	Optional Chronotherm with *open therm* protocol. This is ideal for heating only systems.

Ensure connection is made such that if the cable slips in its anchorage the current carrying conductors become taut before the earthing conductor.

3.9 EXCHANGING A BOILER

Before removing an existing boiler add Fernox Supafloc , or equivalent cleaning agent, in accordance with the manufacturers' instructions. Open all radiator valves and fire the boiler. When the system is fully heated, shut off the gas supply and drain down the central heating system.

Important

The C45, C40P and C55(P) condensing boilers contain components which could be damaged or blocked by grease, dirt or solder etc. It is essential that sludge or scale is removed from an existing system.

The guarantee provided with the Keston C45, C40P and C55(P) does not cover damage caused by system debris or sludge.

Connect the new boiler as instructed in this manual and fit in accordance with Sections 3.1 to 3.8

For sealed systems, fill to a pressure of about 2.7 bar. Check the complete system for water soundness. If leaks need to be rectified using flux or solder the system must be flushed cold again before proceeding.

Reduce the pressure to the Initial System Design Pressure for sealed systems, if applicable. Vent the system.

Gas Supply

The complete gas installation up to the boiler service cock must be checked for soundness. BS 6891.

Electrical Installation

Carry out preliminary electrical safety checks, i.e. Earth continuity, Polarity, Resistance to Earth, Short Circuit and earth loop impedance using a suitable test meter.

Initial Firing

The gas pressure setting is factory adjusted to within the required range and does not need readjustment. If the reading is incorrect then check such factors as soundness of the air and flue pipe joints, pressure sensible joints and the gas inlet pressure (minimum 18 mbar required for Natural Gas and 31 mbar required for LP gas). If all joints are sound and the gas inlet pressure is satisfactory set the gas pressure check the gas input. Full details of this procedure are given in Section 4.9 Timing The Gas Meter.

Combustion Testing

It is advisable on all installations that the combustion quality is checked by measuring the carbon dioxide (CO_2), or oxygen (O_2), level. This procedure is detailed in Section 4.7 Combustion Testing. Badly tuned combustion will lead to reduce the life of the boiler and invalidate the warranty.

4. COMMISSIONING OF THE BOILER

Important:
This condensing boiler contains components which could be damaged or blocked by grease, dirt, solder etc., from the water system. The following commissioning procedures must be followed precisely.

It is essential that combustion is checked at high and low rate , as per Section 4.7, using a calibrated flue gas analyser set for the relevant gas type.

4.1 INITIAL FLUSHING

All waterways within the Keston C45 and C55 are either copper, high alloy stainless steel or aluminium. As a result water treatment chemicals for central heating boilers such as Fernox MB1, Sentinel X100 or equivalent, are suitable. In any event reference must be made to BS 7593 : Treatment Of Water In Hot Water Central Heating Systems.

a. Disconnect the boiler from the system at the flow and return connections and temporarily link the flow and return pipes on the system.
b. Flush the entire system until clean water is discharged, free from dirt, flux, solder etc. The use of a flushing chemical is recommended, e.g. Fernox Supafloc, or equivalent.
   Sludge and scale must be removed from an existing system. Boiler failure due to system debris or sludge shall invalidate the guarantee.
c. Connect the system to the boiler and fill in accordance with Section 2.7 - Water Systems. At this stage, for sealed systems, fill to a pressure of about 2.7 bar.
d. Check the complete system for water soundness. If leaks need to be rectified using flux and solder, the system must be flushed cold again before proceeding.
e. Reduce the pressure to the Initial System Design Pressure for sealed systems, if applicable. Vent the system

4.2 GAS SUPPLY

The complete gas installation up to the boiler service cock must be checked for soundness. BS 6891.

4.3 ELECTRICAL INSTALLATION

Carry out preliminary electrical safety checks, i.e. Earth continuity, Polarity, Resistance to Earth, Short Circuit using a suitable test meter.

4.4 LP GAS

The Keston C45, C40P and C55(P) are supplied preset for the gas designated on the boiler packing. No field conversion is possible. LPG installations must use C40P and C55P models only.

4.5 INITIAL FIRING

Important
Checking the gas pressure to the pre-mix burner requires a special procedure, outlined below, which must be carried out.

a. Purge the gas supply in accordance with BS 6891.
b. Vent the water system.
   Important:
   The heat exchanger consists of crossflow tubes which can trap an air pocket. Great care must be taken to ensure that water flow has been established through the heat exchanger and thus ensuring no air pockets remain in the heat exchanger and pipe work. Firing the boiler while an air pocket exists in the heat exchanger could damage it.
c. Turn the gas service cock to ON.
d. Turn on the electrical supply, setting any external controls to call for heat.

e. Adjust the upper rotary control knob, central heating temperature, to the maximum clockwise position. Adjust the lower rotary control know, DHW temperature, to the maximum clockwise position.
Once a demand is received the left hand digit of the boiler display will change to "1" to indicate the boiler has entered the 10 second pre-purge phase. During this phase the boiler fan and pump will start to run. The digit will then change to "2" to indicate ignition is taking place whilst the gas valve is opened and the spark generated. Once the gas has ignited at the main burner the left hand digit will change to "3" or "4" (depending on demand received) to show the boiler is alight.
If an air lock or other blockage is present the unit may go to overheat or water pressure lockout. This will be indicated by the first digit of the display showing "9" and a flashing error code starting with "b". If this occurs clear the blockage and/or purge the air from the system, and press the "Reset" button to restart the ignition sequence.
If ignition does not occur, the boiler, at approximately 20 second intervals, will make four further attempts to light the burner.
If after five automatic attempts the boiler still fails to ignite, the display will show the code "E 02" indicating no ignition.
If, after five manual attempts (to allow for purging of any air in the gas line), the boiler still fails to ignite (indicated by the red (lockout) lamp) refer to Section 5.3 - Fault Modes.

f. **Check for gas soundness between the gas service cock and connection to the burner manifold.**

4.6 HOT FLUSHING

a. Allow the system to heat up, checking for water soundness.
b. Follow instructions provided with the cleaning agent, i.e. Fernox Supafloc, or equivalent. Turn off the boiler and flush the water system while still hot.
Thoroughly flush the system with clear water.
c. Refill the system using a quality water treatment such as Fernox MB1 or Sentinel X100. For sealed systems, fill to the required Initial Design Pressure.

4.7 COMBUSTION TESTING

Competence to carry out the check of combustion performance

PLEASE NOTE: BS 6798:2009 Specification for installation and maintenance of gas fired boilers of rated input not exceeding 70kW net advises that:

The person carrying out a combustion measurement should have been assessed as competent in the use of a flue gas analyser and the interpretation of the results;
The flue gas analyser used should be one meeting the requirements of BS7927 or BS-EN50379-3 and be calibrated in accordance with the analyser manufacturers' requirements, and
Competence can be demonstrated by satisfactory completion of the CPA1 ACS assessment which covers the use of electronic portable combustion gas analysers in accordance with BS 7967, Parts 1 to 4.

Although the gas pressure is preset at the factory it is required to assure proper combustion by measuring gas input and the level of carbon dioxide, or oxygen and carbon monoxide, in the flue outlet from the boiler. Over firing or under firing the burner will reduce the longevity of the appliance and may result in excessive carbon monoxide levels. Carbon dioxide and carbon monoxide are colourless, odourless gases produced by all combustion processes. When the Keston condensing boiler is operating properly, carbon dioxide (CO_2) levels will be between 8 & 8.2% (C45 low rate), 8.3 & 8.5% (C55 low rate), 8.2 & 8.7% (C45 high rate) and 8.6 & 9% C55 (high rate) and carbon oxide (CO) levels will be between 5 to 20 ppm (low rate) and 50 to 150 ppm (high rate) for natural gas. For LP gas, carbon dioxide (CO_2) levels will be between 9.3 & 9.5% (C40P low rate), 9.6 & 9.8% (C55P low rate), 9.8 & 10.3% (C40P high rate) and 10 & 10.5% (C55P high rate) and the carbon monoxide will be between 5 & 20 ppm (low rate) and 50 & 150 ppm.
In any event, the CO_2 level at low rate must ALWAYS be less than CO_2 levels at high rate.

To measure CO_2 levels in the Keston boiler remove the 1/8" plug from the flue outlet pipe spigot (Figure 5.7.4 item 18). Insert the probe of a calibrated combustion analysis meter and sample the gases as instructed in the test equipment's instructions.
When firing the boiler for the first time since installation, the CO level at high rate may be between 100-220 ppm and between 50-80 ppm at low rate. This is due to compounds used during manufacture curing within the combustion chamber. On boilers which have been fired for more than one hour since installation, the CO levels should not exceed 150 ppm at high rate and 50 ppm at low rate. If CO levels above these values are experienced, the combustion chamber and flue system should be investigated.

The C55 & C45 are factory set for combustion and should need no adjustment. However, in the event adjustment is required.
Check combustion errors are not a result of incorrectly installed flue and/or air system, terminal location or damage or debris on the burner. If all these factors are found to be in order proceed as follows:

1) Set any controls to call for heat.

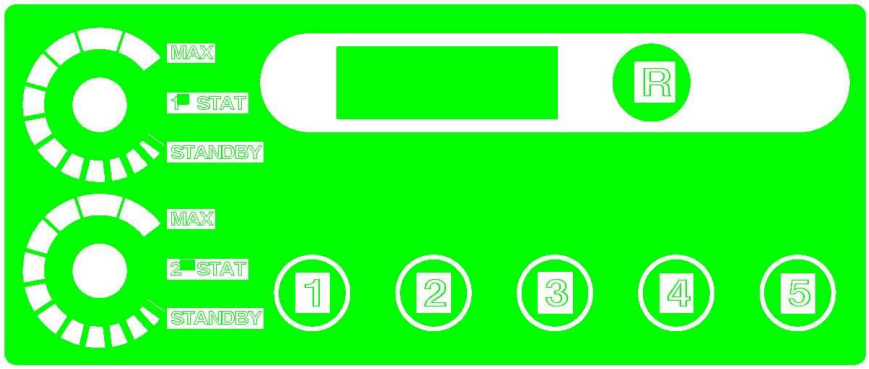

2) Set the boiler to run at maximum / minimum fan speed. To do this is necessary to access the hidden buttons (behind the “KESTON” label under the display). There are five buttons, which are used to adjust settings and provide additional boiler information. The drawing below shows the layout of these buttons and their function.

<u>To set the fan to maximum.</u>
Press the “Mode” button repeatedly until the display shows “Stby”.
Press and hold the “Mode” and “+” key together for 2 seconds. The display will then show “H nn”. The unit is now locked on max fan speed.

3) Measure the CO_2 reading in the flue gases and adjust, if necessary, the adjustment screw (pos. 5) to produce a CO_2 reading of 8.2% to 8.7% for C45 and 8.6% to 9% for C55 with a corresponding CO level of 50 to 150 ppm for natural gas and 9.8% to 10.3% for C40P and 10% to 10.5% for C55P with a corresponding CO level of 50 to 150 ppm for LPG. NORMAL ADJUSTMENT, IF REQUIRED, SHOULD NEED NO MORE THAN HALF OF ONE ROTATION OF THE ADJUSTMENT SCREW (pos. 5). ADJUSTMENTS, IF MADE, SHOULD BE IN STEPS OF NO MORE THAN 1/8 OF A TURN. YOU MUST WAIT 1 MINUTE AFTER EACH ADJUSTMENT TO ALLOW THE SETTING TO STABILISE BEFORE TAKING A READING

<u>To set the fan to minimum</u>
Press the “Mode” button repeatedly until the display shows “Stby”
Press and hold the “Mode” and “-“ keys together for 2 seconds. The display will then show “L nn”. The unit is now locked on min fan speed.

4) Measure the CO_2 reading in the flue gases. The CO_2 reading must be 8% to 8.2% for C45 and 8.3% to 8.5% for C55 with a corresponding CO level of 5 to 20 ppm for natural gas and 9.3% to 9.5% for C40P and 9.6% to 9.8% for C55P with a corresponding CO level of 5 to 20 ppm for LPG. THE CO2 LEVEL AT LOW RATE MUST ALWAYS BE

LESS THAN THE CO2 LEVEL AT HIGH RATE. ADJUSTMENTS, IF MADE, SHOULD BE IN STEPS OF NO MORE THAN 1/8 OF A TURN. YOU MUST WAIT 1 MINUTE AFTER EACH ADJUSTMENT TO ALLOW THE SETTING TO STABILISE BEFORE TAKING A READING

If following the above procedure, combustion levels described above at both high and low rate could not be obtained, please turn off the appliance and isolate the gas to the appliance. Telephone KESTON BOILERS technical support (phone no. 0208 462 0262)

To revert to normal modulation
Press the "Mode" button repeatedly until the display shows "Stby"
Press and hold the "+" and "-" keys together for 2 seconds.

4.8 CHECKING THE GAS PRESSURE

The gas setting is factory adjusted to within the required range and should not need adjustment. If the reading is incorrect then check such factors as soundness of the air and flue pipe joints and the gas inlet pressure (pos. 3) (minimum 18 mbar required for natural gas, minimum 31 mbar required for LP gas).

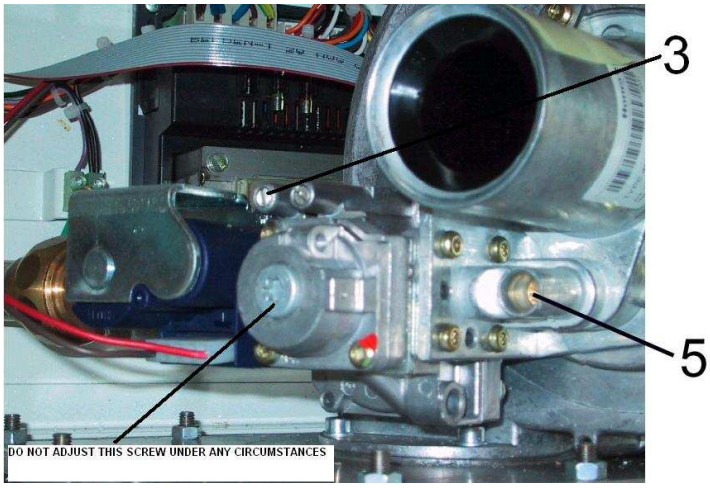

If all joints are sound and the gas inlet pressure is satisfactory check the gas input by timing the gas meter as detail in Section 4.9 Timing The Gas Meter. If the gas input cannot be measured then it's compulsory to measure the combustion quality as detail in Section 4.7 Combustion Testing.

4.9 TIMING THE GAS METER

After the boiler has been started, and with no other appliances using gas, time the gas meter to be certain that the unit is running at the proper gas input. Determine the cubic feet of gas passing through the meter and determine the input in Btu per hour. Input must be within plus or minus 5% of the rated input.
Time, in seconds, the time taken to pass 2 cubic feet of gas through the meter (i.e. one revolution of a 2 cu ft dial) or 0.1 cubic metres if the meter is of the new metric digital type.

Model	Time for 2 cu ft	Time for 0.1 cu m
C45 (natural gas)	48	85
C40P (LPG)	125	221
C55 (natural gas)	39	68
C55P (LPG)	105	185

If the meter timing is found to be incorrect <u>when the boiler is firing at maximum rate</u> contact Keston Boilers Ltd for further guidance.

4.10 HANDING OVER TO THE USER

It is important to fully explain the following:

a. Procedure to light and turn off the boiler, including isolation of the electrical supply if necessary.

b. The function of the lockout feature must be explained :
If the display shows “E 02” this means that the boiler has failed to light. Press the “Reset” button and wait.
   i) If lockout recurs immediately then the gas supply should be checked as ON, otherwise consult a Service Engineer.
   ii) If it is not possible to relight, the boiler must be isolated and a Service Engineer called in to rectify the fault.

c. Advise that a reduction in the water pressure reading on the system pressure gauge, for sealed systems, indicates a leak which should be rectified before further use.

d. Advise that the appliance should be serviced by a competent person at least once a year.

e. Advise on the frost protection and pump/fan exercise feature.

f. Hand over User Instructions.

Complete all sections of the **Chapter 9 Gas Boiler Commissioning Checklist** that are relevant to the appliance installation. The details will be required in the event of any warranty work.

g. Advise the user that a plume of water vapour (steam) from the flue terminal is normal and that there is no need for concern.

5. FAULT FINDING

5.1 ELECTRICAL CONTROL SEQUENCE

When the external controls are calling for heat, power will be fed to the boiler connection strip at terminals SL1 (Switched Live 1) &/or SL2 (Switched Live 2) and N (Neutral). If the user control setting on the relevant knob is to a temperature less than the boiler flow temperature the display will show “6 nn” where nn is the actual boiler flow temperature. If the user control setting of the relevant knob is to a temperature above the actual boiler flow temperature and provided all temperature thermostats and pressure switches are closed the control PCB will initiate the following sequence.

(1) The fan will start.

(2) When the fan reaches running speed, the control PCB will start the ignition sequence and the first digit of the display will show “1”.

(3) After a pre-purge period of about 10 seconds, the first digit of the display will show “2”, the gas valve will open to allow gas to mix with the air at the suction side of the fan and the ignition spark will occur at the main burner.

(4) When the burner ignites, the flame is detected by the control PCB through the combined flame sensor/ignitor and the ignition spark is stopped. The first digit of the display will show “3” or “4” depending on the external demand being served. The boiler is now in its normal run condition.

(5) The boiler will automatically and continuously adjust its power output and pump speed to best match the demands of the system at any time.

(6) The burner will continue to operate until the gas valve interrupts the gas supply. The gas valve will be closed by the control PCB if power is interrupted to the boiler by any external control or the boiler thermostat. If an interruption to the gas supply causes loss of the flame, the control box will pause for approximately 10 seconds and then attempt to re-ignite the unit. If this attempt fails, i.e. due to continued lack of gas supply, the boiler will make four further attempts to ignite at intervals of approximately 10 seconds and will then go to a lockout state (the display shows “E 02”). Once the gas supply has been resumed the boiler can be reset by pressing the “Reset” button.

(7) The boiler can also be shut down by the cabinet temperature sensor or flue overheat thermostat.

Any failure of the boiler to sequence in the above manner should be investigated using the following trouble shooting flow diagram.

Before attempting any electrical fault finding, always carry out preliminary electrical system checks. On completion of any service/fault finding task which has required the breaking and remaking of electrical connections, the checks, earth continuity, polarity, short circuit, resistance to earth must be repeated.

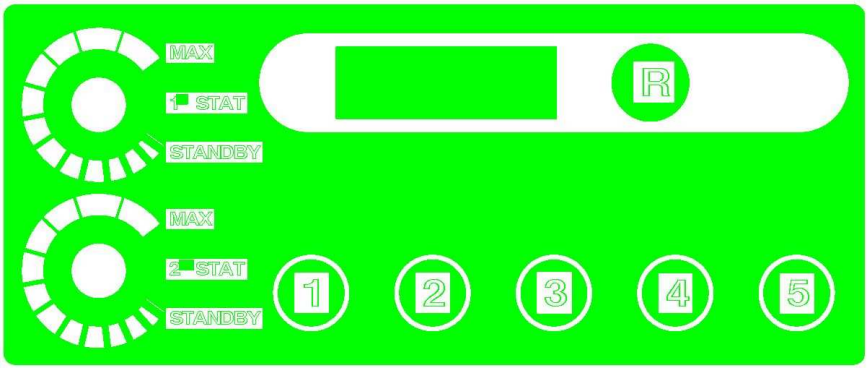

QUICK REFERENCE

5.2 NORMAL OPERATION

The C45, C40P and C55(P) boilers feature a user display which shows actual flow temperature at all times (the last two digits of the display) and a status number (the first digit) which identifies what the boiler is doing at any given time. The table below shows the range of status codes which will be displayed as part of normal boiler operation:

NORMAL OPERATION CODES

Display	Meaning
0 nn	Boiler in standby waiting for demand signal
1 nn	Boiler is running fan prior to attempting ignition
2 nn	Boiler has opened gas valve and is sparking at ignitor
3 nn	Boiler is alight and running in response to a demand from central heating (i.e. SL1)
4 nn	Boiler is alight and running in response to a demand from DHW (i.e. SL2)
5 nn	Temporary mode whilst boiler is adjusting internal settings
6 nn	Burner is off because the boiler is up to temperature
7 nn	Boiler pump is in Central Heating overrun mode (2 mins)
8 nn	Boiler pump is in DHW overrun mode (2 mins)
A nn	Temporary mode whilst boiler is adjusting internal settings

5.3 FAULT MODES

5.3.1 Automatic Lockout Avoidance

The boiler will react to adverse conditions in two ways. If the fault is not severe, or is not persistent, the boiler will halt (or block) operation for a set time before it attempts to fire again. During this block time the block code will be displayed, alternately with the code “9 nn”, where nn is the boiler flow temperature.

BLOCK CODES

Display	Reason for block
B 18	Flow temperature exceed 95°C
B 19	Return temperature exceeded 95°C
B 24	Return temperature exceeded flow temperature. Check pump direction on boiler and any external pumps. Check wires on flow and return thermistors are not crossed.
B 25	Flow temperature climbing too quickly. Possible air lock or circulation blockage
B 26	Low water pressure
B 28	No signal from fan. Possible fan disconnected or faulty.
B 29	Incorrect signal from fan. Possible fan faulty.
B 30	Difference between flow and return temperatures too high. Check water circulation
B 65	Waiting for fan to start

5.3.2 LOCKOUT

If the fault is persistent or more severe the boiler will lockout with a error code. When the boiler has entered this error mode it will not attempt to restart until the “Reset” button is pressed.

ERROR CODES

Display	Description of fault
E 00	Flame detected when not expected. Check boiler earth and probe condition.
E 02	No ignition after restart. Check gas supply, gas valve operation and ignitor electrode spark generation
E 03	Gas valve faulty or not connected
E 04	Power has been reset whilst boiler was in lockout
E 11	Internal electronics error - rest or replace control box
E 12	Thermal fuse blown or flue overheat thermostat activated.
E 18	Flow overheat - check water circulation
E 19	Maximum return temperature exceeded. Check circulation.
E 25	Flow temperature increased too quickly. Check water circulation.
E 28	Fan not rotating - check fan connection and fan for fault.
E 30	Difference between flow and return temperatures too high. Check circulation.
E 31	Flow thermistor short circuit - check/replace connections/thermistor
E 32	Return thermistor short circuit - check/replace connections/thermistor
E 36	Flow thermistor open circuit - check/replace connections/thermistor
E 37	Return thermistor open circuit - check/replace connections/thermistor
E 44	Low water pressure

5.4 FUNCTIONAL FLOW WIRING DIAGRAM

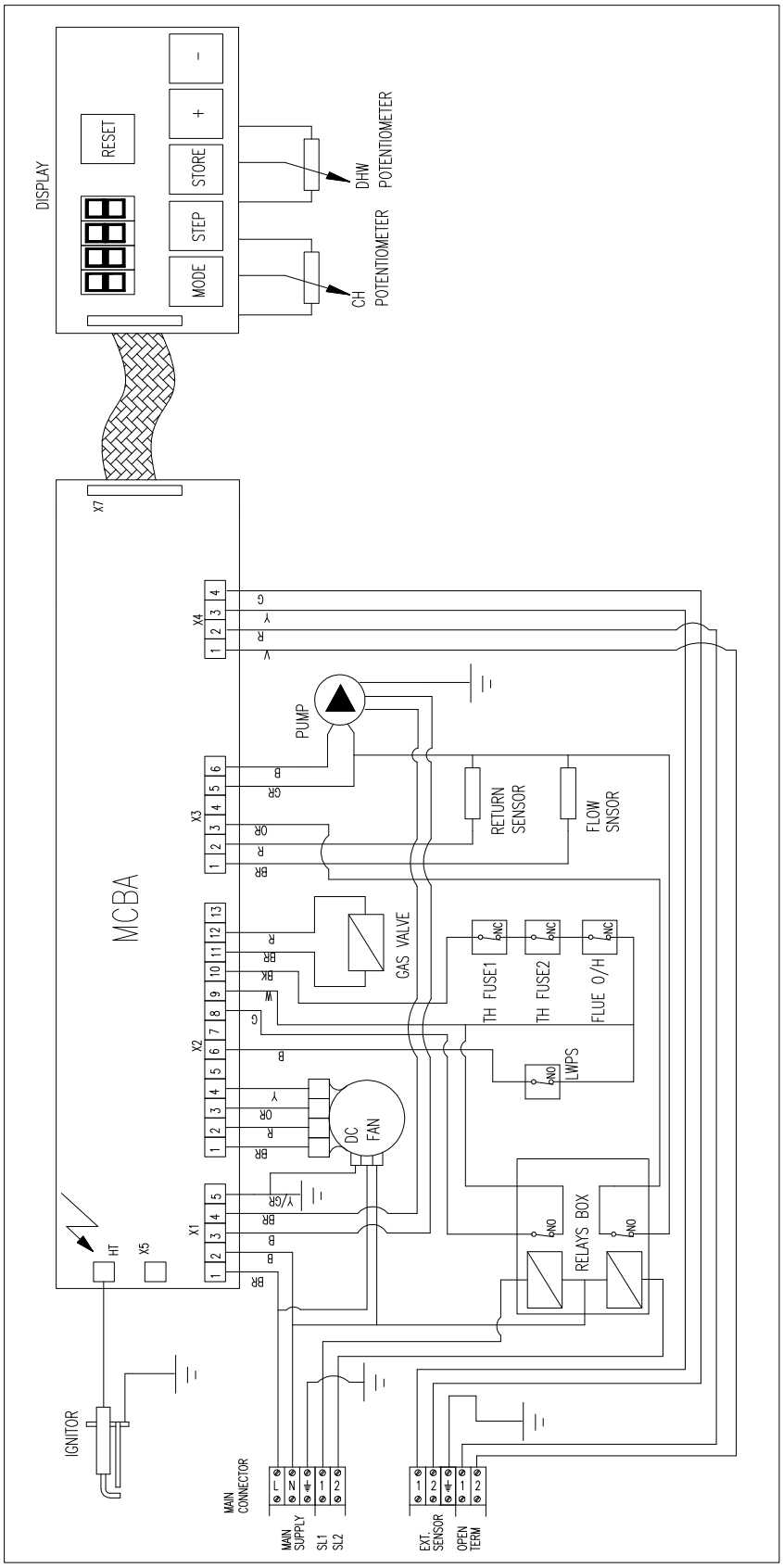

5.5 ELECTRICAL WIRING DIAGRAM

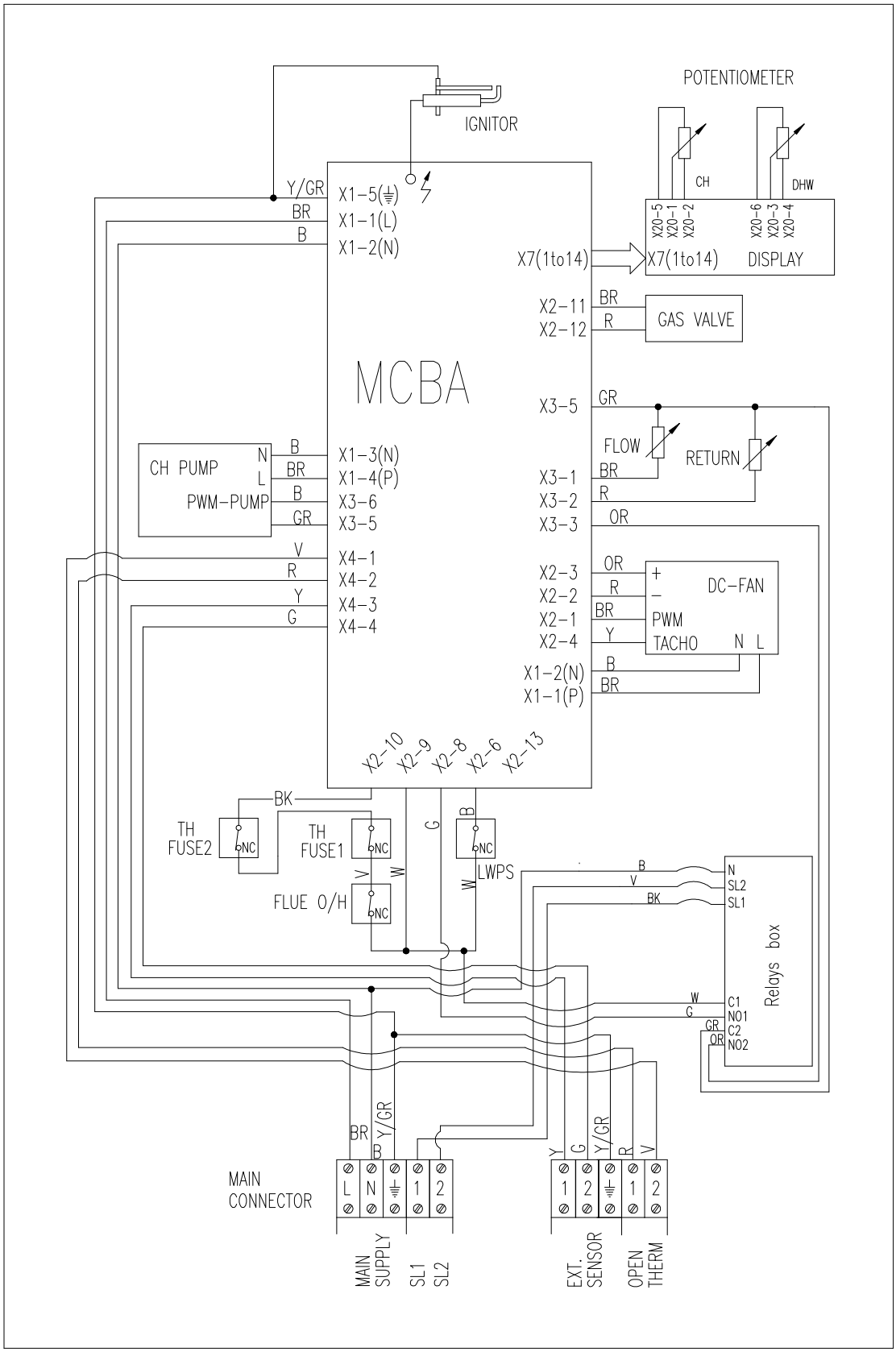

5.6 ILLUSTRATED WIRING DIAGRAM

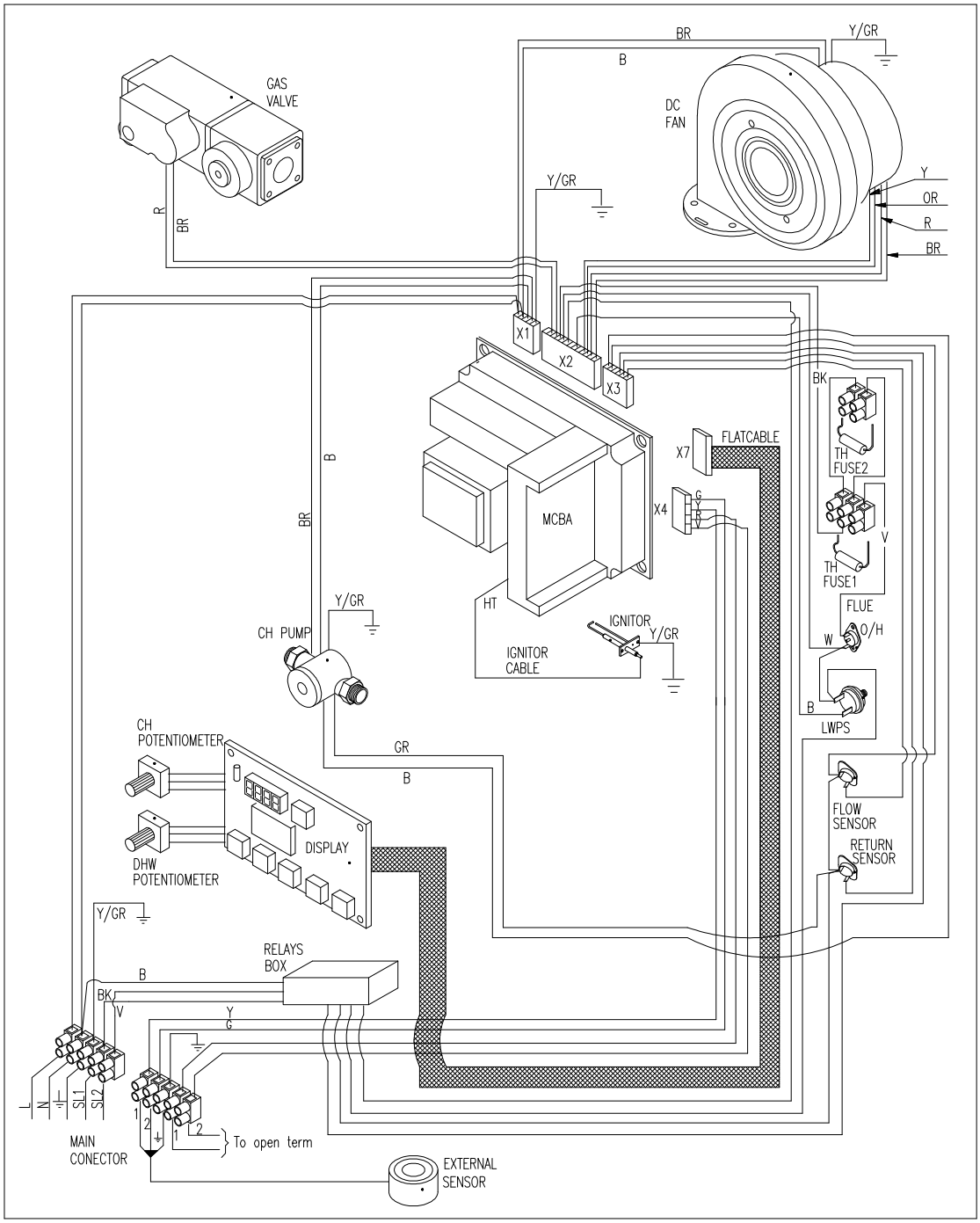

5.7 Exploded Assembly Diagrams

5.7.1 Boiler Controls Assembly

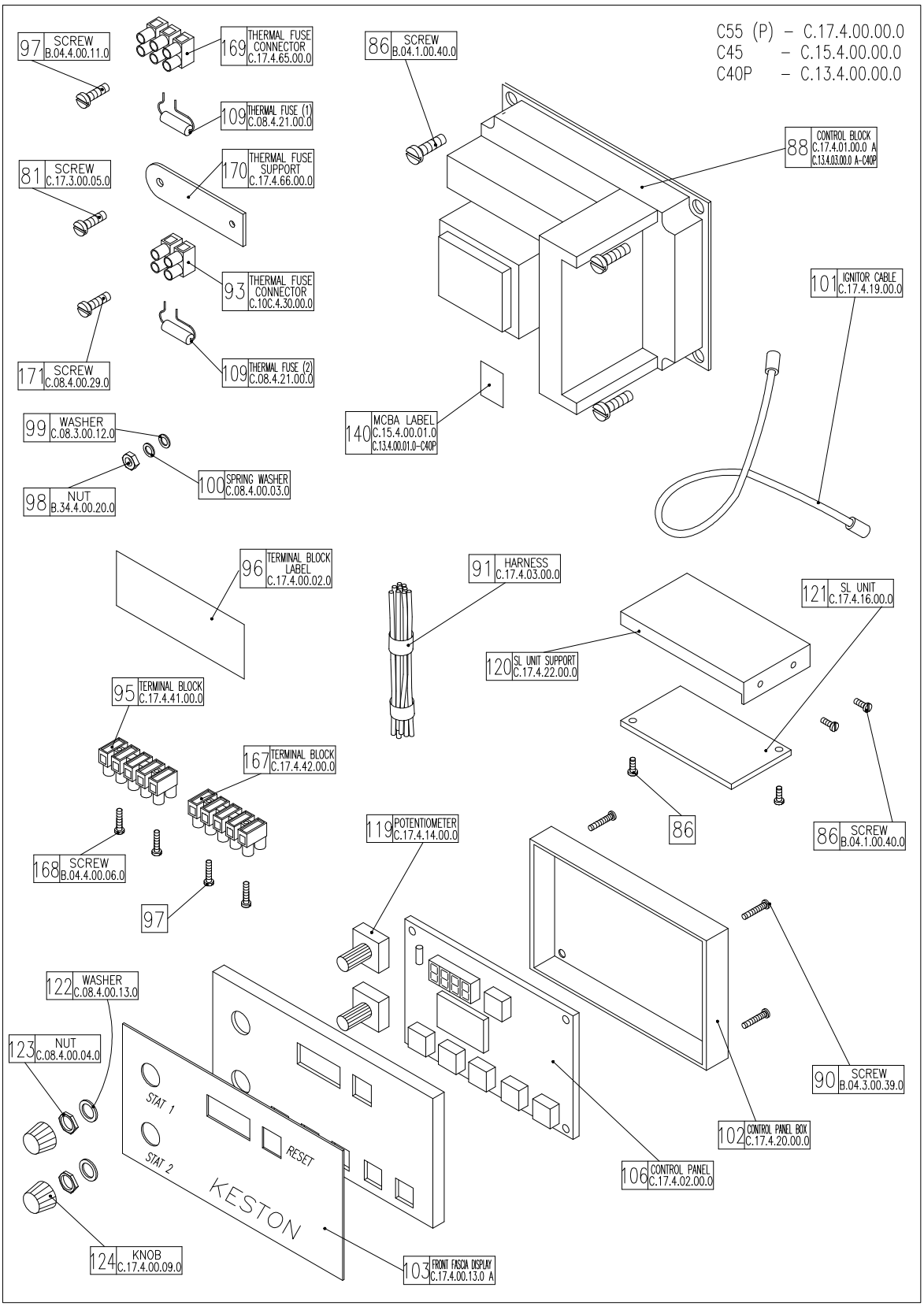

5.7.2 Waterway, Condensate & Flue Assembly

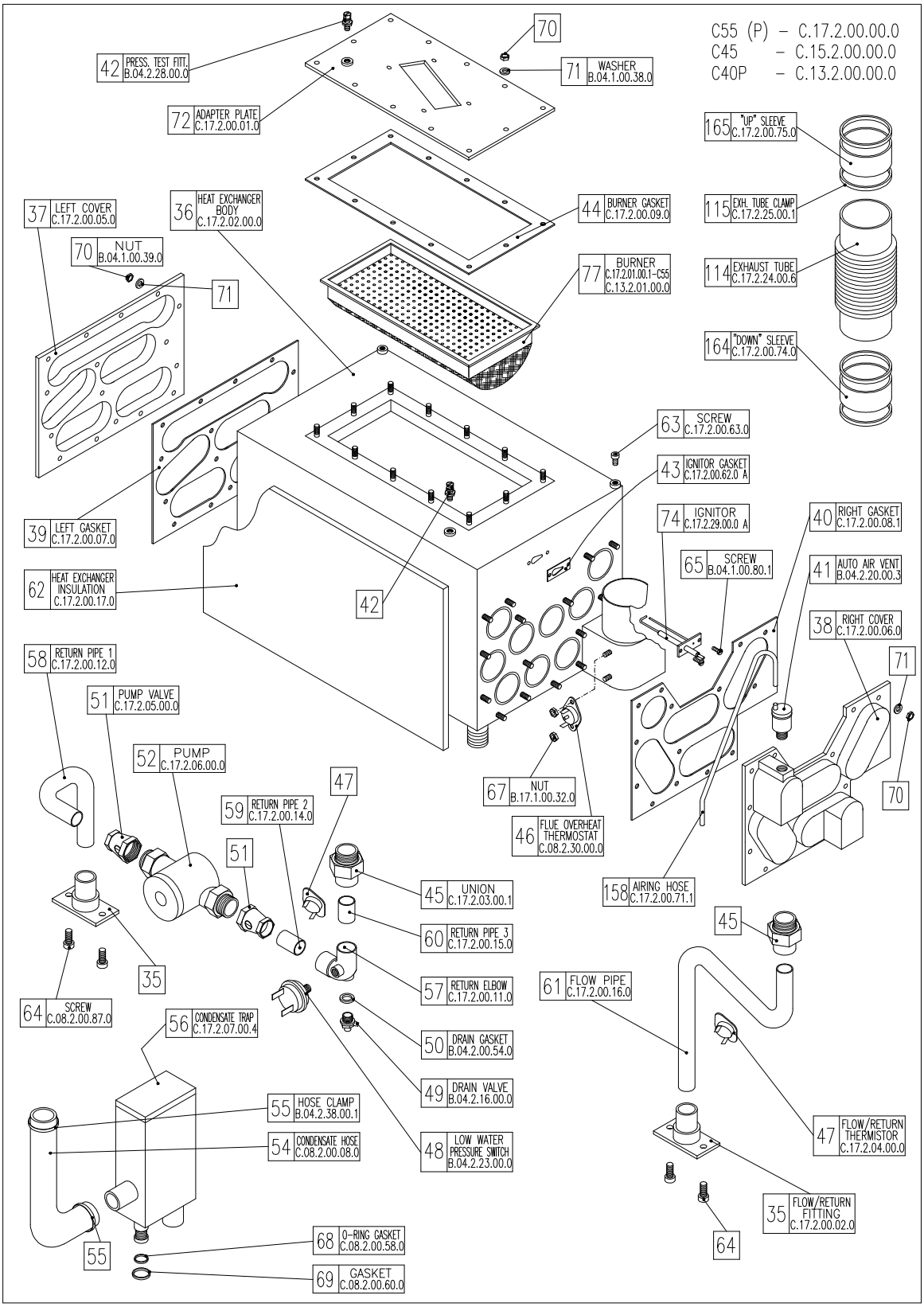

5.7.3 Air - Gas Assembly

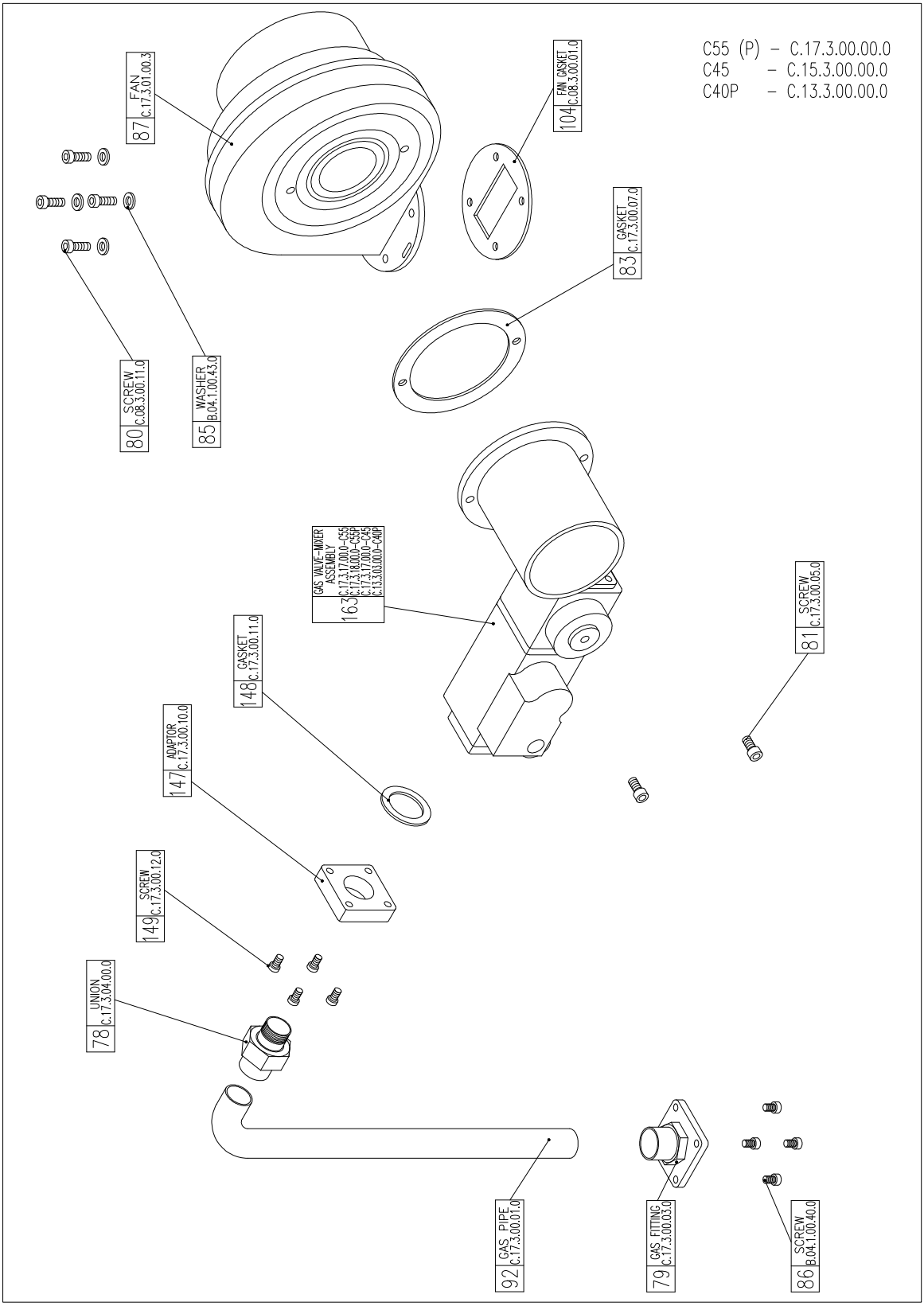

5.7.4 Casing Assembly

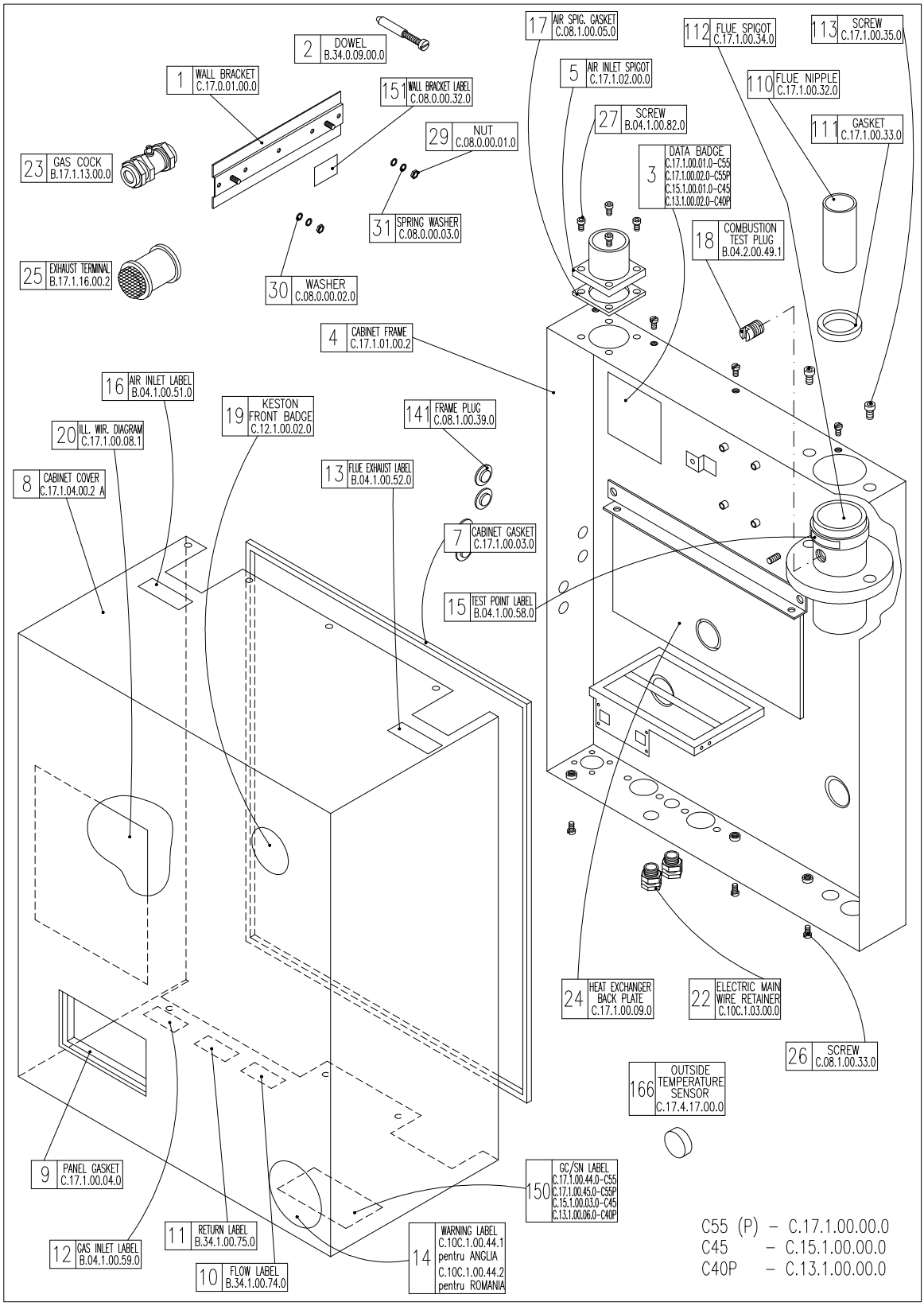

5.7.5 Exploded Diagrams Parts Reference List

Boiler Controls Assembly (Fig. 5.7.1)

GC Number	Code	Description
E93-126	88	C55/C55P/C45 Main Control Box (C.17.4.01.00.0 A)
E93-127	88	C40P Main Control Box (C.13.4.03.00.0 A)
E93-130	106	Control Panel (C.17.4.02.00.0)
	95	Terminal Block HV (C.17.4.41.00.0)
	167	Terminal Block LV (C.17.4.42.00.0)
E72-401	109	Thermal Fuse (C.08.4.21.00.0)
E93-135	101	Ignitor Cable (C.17.4.07.00.0)

Waterway, Condensate & Flue Assembly (Fig. 5.7.2)

GC Number	Code	Description
E93-136	36	Heat Exchanger (C.17.2.02.00.0)
E93-137	77	C55 Burner (C.17.2.01.00.1)
E93-138	77	C45/C40P/C55P Burner (C.13.2.01.00.0)
E93-141	44	Burner Head Gasket (C.17.2.00.09.0)
E93-142	43	Ignitor Gasket (C.17.2.00.62.0 A)
E93-143	74	Spark Ignition Electrode (C.17.2.29.00.0 A)
E93-144	56	Condensate Trap (C.17.2.07.00.4)
E93-145	47	Flow/Return Thermistor (C.17.2.04.00.0)
E72-332	46	Flue Overheat Stat (C.08.2.30.00.0)
114-045	48	Water Pressure Switch (B.04.2.23.00.0)
E93-146	52	Water Pump (C.17.2.06.00.0)

Air - Gas Assembly (Fig. 5.7.3)

GC Number	Code	Description
E93-147	73	Combustion Blower (C.17.3.01.00.3)
	163	C45/C55 Gas Valve - Mixer Air Gas Assembly (C.17.3.17.00.0)
	163	C55P Gas Valve - Mixer Air Gas Assembly (C.17.3.18.00.0)
	163	C40P Gas Valve - Mixer Air Gas Assembly (C.13.3.03.00.0)

Casing Assembly (Fig. 5.7.4)

GC Number	Code	Description
E93-150	8	Cabinet Cover (C.17.1.04.00.2 A)
	3	C55 Databadge - NG (C.17.1.00.01.0)
	3	C55P Databadge - LPG (C.17.1.00.02.0)
	3	C45 Databadge - NG (C.15.1.00.01.0)
	3	C40P Databadge - LPG (C.13.1.00.02.0)
E73-355	18	Combustion Test Plug (B.04.2.00.49.1)

6. ROUTINE (ANNUAL) SERVICING

To ensure the continued safe and efficient operation of the boiler it is necessary to carry out routine servicing at regular intervals. The frequency of the servicing will depend upon the particular operating conditions, but it is recommended that an annual service should be carried out by a qualified engineer.

It is the law that any service work must be carried out by competent qualified persons.

NB: When servicing ensure that the gas and electrical supplies to the boiler are isolated before any work starts. It should be noted that setting the user controls to "Standby" does not isolate the electrical supply and parts of the boiler will remain live.

Hazardous materials are not used in the construction of the C45, C40P and C55(P). However, due care should be taken when handling boiler components.
All joints should be checked for soundness after servicing and before firing the appliance.

After servicing complete the **Gas Boiler Commissioning Checklist - Service Interval Record (Chapter 9)**. **These forms (Chapter 9) should be kept in a safe place for the life of the boiler.**

PLEASE NOTE: During routine servicing, and after any maintenance or change of part of the combustion circuit, the following must be checked:

- **The integrity of the flue systems and flue joints, as described in Section 3.4**
- **The integrity of the boiler combustion circuit and the relevant seals**
- **The operational (working) gas inlet pressure at maximum rate, as described in Section 4.8**
- **The gas rate, as described in Section 4.9**
- **The combustion performance, as described in Section 4.7**

6.1 Pre-Service Checks

It is recommended that an inspection should be carried out prior to shutting down the unit for servicing. Remove the front cover by removing the screws retaining the top and bottom. The following items should be observed:

a. Smooth starting and running of the blower.
b. Smooth lighting of the burner.
c. Check for leakage of gas, gas/air or combustion products.
d. Check for condensate leaks.
f. Check that the boiler does not enter "blocks" in operation whilst running (indicated by the display alternating between "9 nn" and "B nn", where nn indicated either the flow temperature or the block code). If so refer to section 5.2 and section 5.3 for details of code meanings and rectify.
g. Check for water soundness.
h. Inspect the flue vent and air intake pipework. Joints must be sound and all pipework well bracketed.
i. Check that there is a steady fall back to the boiler from the flue pipe to allow condensate to run back into the boiler.
j. With the boiler operating at a low return temperature (i.e. less than 50°C) check that the condensate flows freely from the condensate line.

6.2 Recommended Routine Service

a. Remove the outer case by first removing the securing screws at the top and bottom of the appliance.

b. Remove the burner head (Section 7.6) and inspect the burner appearance. Black markings or other discoloration's on the gauze indicate too much gas or a lack of air possibly due to a blocked air inlet. Any breakage's or damage to the burner mesh indicate the burner must be replaced.

c. If necessary clean the burner with a mild household detergent and rinse under a hot running tap.

d. If necessary, from visual inspection, clean the heat exchanger using a suitable stiff plastic bristle brush, vacuum out any large particles and flush the heat exchanger with fresh water until the water flowing from the condensate drain is clear.

e. Remove the condensate trap (Section 7.8) and clean by flushing through with clean running water.

f. Check the electrode assembly mounted on the heat exchanger. If the point is damaged or burnt replace it.
Check that the spark gap measures 3 mm.

g. Replace the burner head, renewing the gasket if necessary, and reconnect the gas/air supply. Ensure the flanged gas/air supply joint is air tight.

h. Turn on the electrical supply to the boiler and allow the boiler to reach operating temperature levels.

i. Remove the combustion test point plug from the flue pipe. This is situated on the flue spigot out of the cabinet.

j. **Carry the full procedure detailed in section 4.7 COMBUSTION TESTING - MANDATORY**

k. Replace the combustion test point plug.

l. Recheck the burner pressure by following the procedure detailed in Section 4.7.

m. Check all joints for soundness up to the gas burner.

n. Complete the **Gas Boiler Commissioning Checklist - Service Interval Record (Chapter 9)**.

7. REPLACEMENT OF PARTS

CONTENTS

7.0 GENERAL
7.1 PRECAUTIONS
7.2 ACCESS
7.3 REPLACEMENT PROCEDURE
7.4 ELECTRICAL COMPONENTS
7.4.1 CONTROL PANEL
7.4.2 BOILER FLOW & RETURN THERMISTORS
7.4.3 CABINET TEMPERATURE SENSOR
7.4.4 FLUE PROTECTION THERMOMSTAT
7.4.5 WATER PRESSURE SWITCH
7.4.6 MAIN CONTROL BOX
7.4.7 COMBUSTION BLOWER
7.4.8 GAS CONTROL VALVE / VENTURI ASSEMBLY
7.5 SPARK IGNITION/FLAME DETECTION ELECTRODE
7.6 BURNER
7.7 HEAT EXCHANGER
7.8 CONDENSATE TRAP
7.9 PUMP

7.0 GENERAL

The following must always be carried out by a competent/qualified person.

7.1 PRECAUTIONS

i) Always switch off the mains electricity supply and disconnect the plug at the isolating switch and socket. (If a switch only is used then remove the fuse.)

ii) Gain access to the appliance (Section 7.2) and turn off the gas supply at the appliance service cock.

WARNING : Parts of the boiler internal wiring will remain live even after setting the User Controls to Standby. Shut off the power supply at the isolating switch before working on the appliance.

7.2 ACCESS

i) Remove the cabinet by removing the screws to the top and bottom of the cabinet.

7.3 REPLACEMENT PROCEDURE

i) Always replace in the reverse order unless otherwise stated.

ii) Electrical connections must be remade in accordance with the Electrical Wiring Diagram (Section 5.5).

iii) Test the soundness of any gas carrying or water carrying joint broken during the service procedures.

7.4 ELECTRICAL COMPONENTS

7.4.1 Control Panel (Fig. 5.7.1 item 106)

i) Isolate the appliance (Section 7.1)

ii) Gain access (Section 7.2)

iii) Remove the user control cover by removing the four retaining screws (Fig 5.7.1, item 90).

iv) Disconnect the Control Panel by unplugging the ribbon cable connection block.

v) Disconnect the potentiometers (Fig 5.7.1, item 119) by unplugging the cable connection.

vi) Reassemble (Section 7.3)

vii) Check for correct operation of the Control Panel.

7.4.2 Boiler Flow and Return Thermistors (Fig. 5.7.2 item 47)

i) Isolate the appliance (Section 7.1)
ii) Gain access (Section 7.2)
iii) Remove the push on connectors from the thermistor taking note of the correct positions.
iv) Unclip the thermistor from the pipe.
v) Reassemble (Section 7.3)
NB: When fitting the new thermistor it is an advantage to smear a thin film of heat sink compound between the thermistor and pipe. This, combined with fitting the new thermistor tightly to the pipe, ensures a good contact.

7.4.3 Cabinet Temperature Sensor (Fig 5.7.1 item 109)

i) Isolate the appliance (Section 7.1)
ii) Gain access (Section 7.2)
iii) Remove the cabinet temperature sensor from the connector block by slackening the retaining screws.
iv) Reassemble (Section 7.3)

7.4.4 Flue Protection Thermostat (Fig. 5.7.2 item 46)

i) Isolate the appliance (Section 7.1)
ii) Gain access (Section 7.2)
iii) Remove the push on connectors from the thermostat taking note of the correct positions.
iv) Unscrew the two retaining screws, or nuts, and remove the thermostat.
v) Reassemble (Section 7.3)
NB: When fitting the new thermostat it is an advantage to smear a thin film of heat sink compound between the thermostat and plate. This, combined with fitting the new thermostat tightly to the plate, ensures a good contact.

7.4.5 Water Pressure Switch (Fig. 5.7.2 item 48)

i) Isolate the appliance (Section 7.1)
ii) Shut off the water supply to the appliance.
iii) Gain access (Section 7.2)
iv) Drain the system to below the level of the appliance using the drain off tap at the base of the return pipe from the heat exchanger.
v) Remove the push on connectors from the water pressure switch taking note of the correct positions.
vi) Unscrew the pressure switch.
vii) Reassemble (Section 7.3).
NB: Use a little jointing compound or PTFE tape on the thread.
viii) Refill the system (See Section 4 - Commissioning).

7.4.6 Main Control Box (Fig. 5.7.1 item 88)

i) Isolate the appliance (Section 7.1)
ii) Gain access (Section 7.2)
iii) Pull off the multi-pin connectors and HT lead away from the board.
iv) Remove the three retaining screws securing the control block to the boiler backframe.
v) Remove the control
vi) Reassemble (Section 7.3)

7.4.7 Combustion Blower (Fig. 5.7.3 item 73)

i) Isolate the appliance (Section 7.1)
ii) Gain access (Section 7.2)
iii) Disconnect the two connector blocks from the combustion blower.
iv) Unscrew the bolts securing the venturi (fig 5.7.3 item 81) to the inlet port of the combustion blower.
v) Remove the four bolts securing the combustion blower (fig. 5.7.3 item 80) outlet flange to the burner and remove the combustion blower.
vi) Reassemble (Section 7.3)
NB: When reassembling inspect any gaskets for damage and replace if necessary.

7.4.8 Gas Control Valve / Venturi Assembly (Fig. 5.7.3 item 163)

i) Isolate the appliance (Section 7.1)
ii) Gain access (Section 7.2)
iii) Remove the push on connector block to the gas valve.
iv) Unscrew the bolts (Fig 6.7.3 item 149) securing the gas inlet pipe to the gas control valve / venturi assembly.
v) Unscrew the bolts securing the gas control valve / venturi assembly (Fig 6.7.3 item 81) to the inlet port of the combustion blower.
vi) Remove the gas valve/venturi assembly as a complete unit.
vii) Reassemble (Section 7.3)
viii) Check the gas rate and combustion (See Section 4 - Commissioning)

NB: Always change the gas valve/venturi assembly together. This assembly is factory preset but must be checked using the procedure set out in Section 4.7 (Combustion testing).

7.5 SPARK IGNITION/FLAME DETECTION ELECTRODE (Fig. 5.7.2 item 74)

i) Isolate the appliance (Section 7.1)
ii) Gain access (Section 7.2)
iii) Remove the pull off HT lead to the spark ignition electrode.
iv) Undo the screws to the spark ignition electrode flange located on the heat exchanger side panel and withdraw the spark ignition electrode.
v) Reassemble (Section 7.3)

NB: When reassembling inspect the gasket for damage and replace if necessary.
With the new spark ignition electrode in place it is essential to ensure the gap between the tip of the electrode and the earth post is 3 mm. Distances above or below 3 mm will affect ignition performance. If necessary gently bend the electrode taking care not to damage the ceramic insulator.

7.6 BURNER (Fig. 5.7.2 items 77)

i) Isolate the appliance (Section 7.1)
ii) Gain access (Section 7.2)
iii) Remove the combustion blower (Section 7.4.7)
iv) Remove the 12 nuts fixing the burner to the top of the heat exchanger.
v) Withdraw the burner from the top of the heat exchanger.
vi) Reassemble (Section 7.3)

NB: When reassembling inspect any gaskets for damage and replace if necessary.

7.7 HEAT EXCHANGER (Fig. 5.7.2 item 36)

i) Isolate the appliance (Section 7.1)
ii) Gain access (Section 7.2)
iii) Shut of the water supply to the appliance.
iv) Remove the burner (Section 7.6)
v) Drain the system to below the level of the appliance using the drain off tap at the base of the boiler return pipe.
vi) Remove the flue protection thermostat (Section 7.4.4)
vii) Remove the spark ignition/flame detection electrode (Section 7.5)
viii) Remove the flue connection by slackening the retaining strap and pulling the flue off the heat exchanger spigot.
ix) Remove the condensate trap hose (Fig 5.7.2 item 54) by releasing the retaining clamp and pulling the hose away from the spigot at the base of the heat exchanger flue outlet box.
x) Disconnect the flow and return pipe unions (Fig 5.7.2 item 45) from the heat exchanger.

xi) Remove the two screws fixing the heat exchanger to the top mounting bracket (Fig 5.7.2 item 63)
xii) Remove the heat exchanger
xiii) Reassemble (Section 7.3)
xiv) Recommission (Section 4 - Commissioning)

7.8 CONDENSATE TRAP (Fig. 5.7.2 item 56)

i) Isolate the appliance (Section 7.1)
ii) Gain access (Section 7.2)
iii) Disconnect the condensate line from the base of the heat exchanger.
iv) Disconnect the condense line from the projection of the condensate trap from the base of the cabinet.
v) Withdraw the condensate trap.
vi) Mop up any spilled condensate.
vii) Reassemble (Section 7.3)

NB: When re-fitting the condensate trap pour water onto the condensate hose from the base of the heat exchanger until nearly full. Then reconnect the condensate hose to the base of the heat exchanger.

7.9 PUMP (Fig 5.7.2 item 52)

i) Isolate the appliance (Section 7.1)
ii) Gain Access (section 7.2)
iii) Isolate the waterways to the pump using the pump isolation valves(Fig 5.7.2 item 51)
iv) Disconnect the pump electrical cable from the connections box of the pump head taking note of the correct position.
v) Remove the four allen bolts securing the pump head to the pump back plate.
vi) Remove the pump head.
vii) Reassemble (Section 7.3)

8. SHORT SPARE PARTS LIST

Item	GC No	Part Denomination	Item	GC No	PartDenomination
77	E93-137 E93-138	C55 Burner C55P/C45/C40P Burner	44	E93-141	Burner Gasket

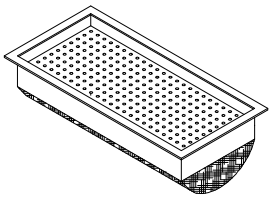

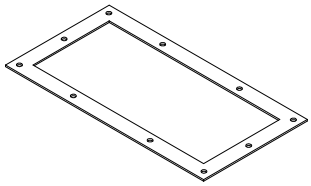

43	E93-142	Ignitor Gasket	74	E93-143	Ignitor/Sensor Probe

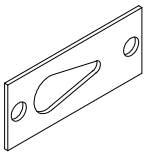

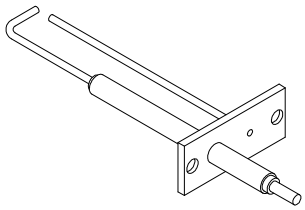

47	E93-145	Flow/Return Thermistors	46	E72-332	Flue Thermostat

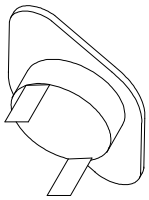

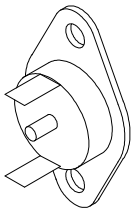

163	C45/C55 Gas Valve/Venturi Assy. C55P Gas Valve/Venturi Assy. C40P Gas Valve/Venturi Assy.		88	E93-126 E93-127	C55/55PC45 Main Contr. Box C40P Main Control Box

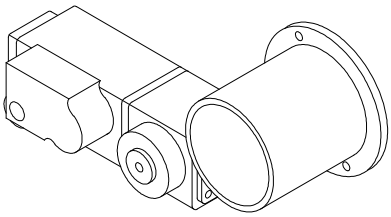

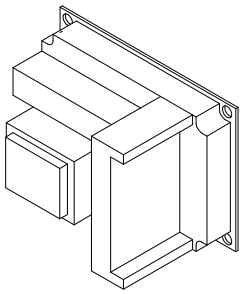

SHORT SPARE PARTS LIST FOR THE KESTON CONDENSING BOILER RANGE

Item	GC No	Part Denomination
47	E93-145	Flow/Return Temperature Thermistor
48	114-045	Water Pressure Switch
46	E72-332	Flue Protection Thermostat
88	E93-126	Main Control Box (C55/C55P/C45)
88	E93-127	Main Control Box (C40P)
106	E93-130	Control Panel
73	E93-147	Combustion Blower
163		Gas Valve / Venturi Ass. (C45/C55)
163		Gas Valve / Venturi Ass. (C55P)
163		Gas Valve / Venturi Ass. (C40P)
56	E93-144	Condensate Trap
74	E93-143	Ignition Electrode
77	E93-137	Burner (C55)
77	E93-138	Burner (C55P/C45/C40P)
36	E93-136	Heat Exchanger
52	E93-146	Circulating Pump
109	E72-401	Cabinet Temperature Sensor

9. GAS BOILER COMMISSIONING CHECKLIST

BENCHMARK No. | | | | | | | |

benchmark™

GAS BOILER COMMISSIONING CHECKLIST

BOILER SERIAL No. _____ ***NOTIFICATION No.*** _____

CONTROLS ***To comply with the Building Regulation, each section must have a tick in one or other of the boxes***

TIME & TEMPERATURE CONTROL TO HEATING	ROOM T/STAT & PROGRAMMER/TIMER		PROGRAMMABLE ROOMSTAT	
TIME & TEMPERATURE CONTROL TO HOT WATER	CYLINDER T/STAT & PROGRAMMER/TIMER	☐ ☐	COMBI BOILER	☐ ☐
HEATING ZONE VALVES	FITTED	☐	NOT REQUIRED	☐
HOT WATER ZONE VALVES	FITTED	☐	NOT REQUIRED	☐
THERMOSTATIC RADIATOR VALVES	FITTED	☐		
AUTOMATIC BYPASS TO SYSTEM	FITTED	☐	NOT REQUIRED	☐

FOR ALL BOILERS CONFIRM THE FOLLOWING

THE SYSTEM HAS BEEN FLUSHED IN ACCORDANCE WITH THE BOILER MANUFACTURER'S INSTRUCTIONS ?	☐
THE SYSTEM CLEANER USED	
THE INHIBITOR USED	

FOR THE CENTRAL HEATING MODE, MEASURE & RECORD

GAS RATE	☐	m^3/hr	☐	ft^3/hr
BURNER OPERATING PRESSURE (IF APPLICABLE)	☐	N/A	☐	mbar
CENTRAL HEATING FLOW TEMPERATURE			☐	^{0}C
CENTRAL HEATING RETURN TEMPERATURE			☐	^{0}C

FOR COMBINATION BOILERS ONLY

HAS A WATER SCALE REDUCER BEEN FITTED ?	YES ☐	NO ☐
WHAT TYPE OF SCALE REDUCER HAS BEEN FITTED ?		

FOR THE DOMESTIC HOT WATER MODE, MEASURE & RECORD

GAS RATE	☐	m^3/hr	☐	ft^3/hr
MAXIMUM BURNER OPERATING PRESSURE (IF APPLICABLE)	☐	N/A	☐	mbar
COLD WATER INLET TEMPERATURE			☐	^{0}C
HOT WATER OUTLET TEMPERATURE			☐	^{0}C
WATER FLOW RATE			☐	lts/min

FOR CONDENSING BOILERS ONLY CONFIRM THE FOLLOWING

THE CONDENSATE DRAIN HAS BEEN INSTALLED IN ACCORDANCE WITH THE MANUFACTURER'S INSTRUCTIONS ?	YES ☐

FOR ALL INSTALLATIONS CONFIRM THE FOLLOWING

THE HEATING AND HOT WATER SYSTEM COMPLIES WITH CURRENT BUIDING REGULATIONS				☐
THE APPLIANCE AND ASSOCIATED EQUIPMENT HAS BEEN INSTALLED AND COMISSIONED IN ACCORDANCE WITH THE MANUFACTURER'S INSTRUCTIONS				☐
IF REQUIRED BY THE MANUFACTURER, HAVE YOU RECORDE A CO/CO_2 RATIO READING?	N/A ☐	YES ☐	CO/CO_2 RATIO	
THE OPERATION OF THE APPLIANCE AND SYSTEM CONTROLS HAVE BEEN DEMONSTRATED TO THE CUSTOMER				☐ ☐

SERVICE INTERVAL RECORD

It is recommended that your heating system is serviced regularly
and that you complete the appropriate Service Interval Record Below

Service Provider. Before completing the appropriate Service Interval Record below, please ensure you have carried out the service as described in the boiler manufacturer's instructions. Always use the manufacturer's specified spare part when replacing all controls

SERVICE 1 DATE
ENGINEER NAME
COMPANY NAME
TEL No.
GAS SAFE REGISTER ID CARD SERIAL No.
COMMENTS
SIGNATURE

SERVICE 2 DATE
ENGINEER NAME
COMPANY NAME
TEL No.
GAS SAFE REGISTER ID CARD SERIAL No.
COMMENTS
SIGNATURE

SERVICE 3 DATE
ENGINEER NAME
COMPANY NAME
TEL No.
GAS SAFE REGISTER ID CARD SERIAL No.
COMMENTS
SIGNATURE

SERVICE 4 DATE
ENGINEER NAME
COMPANY NAME
TEL No.
GAS SAFE REGISTER ID CARD SERIAL No.
COMMENTS
SIGNATURE

SERVICE 5 DATE
ENGINEER NAME
COMPANY NAME
TEL No.
GAS SAFE REGISTER ID CARD SERIAL No.
COMMENTS
SIGNATURE

SERVICE 6 DATE
ENGINEER NAME
COMPANY NAME
TEL No.
GAS SAFE REGISTER ID CARD SERIAL No.
COMMENTS
SIGNATURE

SERVICE 7 DATE
ENGINEER NAME
COMPANY NAME
TEL No.
GAS SAFE REGISTER ID CARD SERIAL No.
COMMENTS
SIGNATURE

SERVICE 8 DATE
ENGINEER NAME
COMPANY NAME
TEL No.
GAS SAFE REGISTER ID CARD SERIAL No.
COMMENTS
SIGNATURE

SERVICE 9 DATE
ENGINEER NAME
COMPANY NAME
TEL No.
GAS SAFE REGISTER ID CARD SERIAL No.
COMMENTS
SIGNATURE

SERVICE 10 DATE
ENGINEER NAME
COMPANY NAME
TEL No.
GAS SAFE REGISTER ID CARD SERIAL No.
COMMENTS
SIGNATURE

KESTON CONDENSING BOILERS
IMPORTANT
C45, C40P & C55(P)
INSTALLATION KEY POINTS

- ☑ *Read Installation Manual Carefully*
- ☑ *Ensure that there is at least 9 feet head of water pressure at the top of the boiler .*
- ☑ *Ensure that ALL dust particles, filings , plastic chips etc. are removed from the inlet pipe.*
- ☑ *If the installation is a replacement the system must be flushed clean. System should be drained hot, then refilled, then drained again until the water is clean.*
- ☑ *Ensure that there is a proper electrical supply i.e. 230V fused at 3A for the permanent live.*
- ☑ *Take great care with pipe connections to ensure that no damage is done to the internal pipework.*
- ☑ *Ensure that the 22mm condensate pipe is not exposed to freezing conditions.*
- ☑ *Make sure that the exhaust pipe terminates away from windows or vents and is out of reach.*
- ☑ *Make sure that the air inlet and exhaust pipe outlets are at least 300mm apart.*
- ☑ *Check tightness of all connections in the boiler before firing.*
- ☑ *Ensure that the terminals supplied are fitted to both the exhaust and air inlet pipes.*
- ☑ *The system must be free from air before firing.*
- ☑ *If TRV's are installed on radiators ensure that a bypass is installed to maintain required flow.*
- ☑ *Complete the **Gas Boiler Commissioning Checklist - Service Interval Record (Chapter 9)**.*
- ☑ *Complete the combustion testing (Section 4.7) using a calibrated flue gas analyser.*