KESTON

C90 & C110

Fan Powered High Efficiency
Modulating Commercial Condensing Gas Boiler

Installation and Servicing Instructions

C90 and C110 Models

CE/PI No : 87BN14

ISSUE: 4/2010

These instructions must be left either with
the user or next to the site gas meter.

KESTON BOILERS LIMITED
34 West Common Road, Bromley, Hayes, Kent BR2 7BX, UK
Tel. +44 (0)20 8462 0262 Fax. +44 (0)20 8462 4459
email : info@keston.co.uk web : www.keston.co.uk

COMPLIANT WITH BUILDING REGULATION PART L2 2002

Qualified for Energy Technology List www.eca.gov.uk ™
Authorised User No. 00144

CE

CONTENTS

Section	Description
0	HANDLING INSTRUCTIONS
0.1	List of contents
0.2	Recommended handling procedure
1	GENERAL INSTRUCTION
1.1	Description
1.2	Boiler Schematic
1.3	Related Documents
1.4	Physical Data
1.5	Performance Data C90
1.6	Performance Data C110
1.7	Optional Accessories
2	BOILER LOCATION
2.1	Dimensions & Minimum Clearances
2.2	Service Connections
2.3	Position
2.4	Electrical
2.5	Boiler Size Selection
2.6	Gas Supply
2.7	Water Systems
2.8	Flue System
2.9	Air Supply
2.10	Compartment Installation
2.11	Condensate Drainage
3	INSTALLATION OF THE BOILER
3.1	Wall Mounting Bracket
3.2	Mounting The Boiler
3.3	Floor Standing - Optional
3.4	Assembly Practice
3.5	Installing Flue And Air Pipes
3.6	Condensate Drainage
3.7	Water System
3.8	Gas Supply
3.9	Electrical Supply
3.10	Exchanging A Boiler

4 COMMISSIONING OF THE BOILER
4.1 Initial Flushing
4.2 Gas Supply
4.3 Electrical Installation
4.4 Initial Firing
4.5 Hot Flushing
4.6 Combustion Testing
4.7 Checking The Gas Pressure
4.8 Timing The Gas Meter
4.9 Handing Over To The User

5 FAULT FINDING
5.1 Electrical Control Sequence
5.2 Normal Operation
5.3 Fault Modes
5.4 Functional Flow Wiring Diagram
5.5 Electrical Wiring Diagram
5.6 Illustrated Wiring Diagram
5.7 Exploded Assembly Diagrams

6 SERVICING
6.1 Pre Service Checks
6.2 Recommended Routine Module Service

REPLACEMENT OF PARTS
7.0 General
7.1 Precautions
7.2 Access
7.3 Replacement Procedure
7.4 Electrical Components
7.5 Spark Ignition/Flame Detection Electrode
7.6 Burner
7.7 Heat Exchanger
7.8 Condensate Trap
7.9 Pump

8 SPARE PARTS LISTINGS

0. HANDLING INSTRUCTION

0.1 LIST OF CONTENTS

The Keston C90 and C110 are supplied almost totally pre-assembled. Since the units use 100 mm Keston Composite pipe for the flue and air intake systems the boiler is packed in a single box without additional flue kit. All additional components are packed inside the boiler cabinet itself. The following is a list of components and their location in the boiler cabinet

Equipment List

Item	Quantity	Location
Wall Bracket Rawl Plugs	9	Inside accessories bag
Wall Bracket Wall Fixing Screws	9	Inside accessories bag
Wall Mounting Bracket	1	Over the boiler case
100 mm Air/Flue Terminals	2	Inside the boiler case
Cabinet Cable Entry Clamps	4	Inside accessories bag
User Control Knobs	2	Inside accessories bag
Boiler Lifting Handles	2	Over the boiler case
Outside Temperature Sensor	1	Inside the boiler case

Document List

Item	Quantity	Location
User Instructions	1	In A4 envelope
Registration of Purchase	1	In A4 envelope
Installation Template	1	In document bag

Remove the cabinet door by removing the two retaining screws in the top of the cabinet front panel and lift the front panel away from the cabinet.

0.2 Recommended Handling Procedure CAUTION - HEAVY UNIT - MULTI-PERSON LIFT

NB : The following lift operation exceeds the recommended weight for a one-man lift as specified in the Manual Handling Operations 1992 Regulations.

For the carriage of carton it is recommended at least four people perform any lift. Clear the carriage route of the carton from point of delivery to point of installation. Take care to avoid trip hazards, slippery or wet surfaces and when climbing steps and stairs. Always use assistance if required.

For the unpacking of the appliance from the carton, it is recommended at least four people perform any lift. It is recommended to open the plywood panels above and to the side using a claw hammer taking care to avoid the exposed nails. When lifting this appliance the back should be kept straight at all times. Avoid twisting at the waist - reposition the feet instead. Avoid upper body bending when holding the appliance and keep the boiler as close to the body as possible.

When ready to hang the boiler on the wall stand the boiler on its base and insert the lifting handles in each side of the boiler. At this stage it is assumed that the wall bracket is correctly secured on the wall face.

a) The boiler has a dry weight of 127 kg (280 lbs) and will therefore require at least four people to lift without the use of lifting aids.
b) Lift the boiler using the lifting handle inserted into each side of the boiler. When lifting this appliance the back should be kept straight at all times. Avoid twisting at the waist - reposition the feet instead. Avoid upper body bending when holding the appliance and keep the boiler as close to the body as possible.
c) Lift the boiler and locate onto the wall mounting bracket ensuring the lip on the back of the boiler cabinet engages fully with the wall bracket.

Safety footwear and gloves are recommended PPE when lifting this appliance - to protect against sharp edges and ensure good grip.

.

The C90 and C110 boilers can be fitted in compartments with very small clearances required around the appliance (refer to Section 2.1). Due consideration should therefore be given to access within the compartment for lifting and positioning.

1. GENERAL INSTRUCTION

1.1 DESCRIPTION

The Keston C90 and C110 are unique in concept and design. They comprise two high efficiency stainless steel heat exchangers coupled with low emissions burners to deliver ultra high efficiency condensing mode operation within a compact wall hung cabinet. The unit automatically adjusts gas and air rate according to demand to give an output in the range of 22kW to 90kW (C90) and 25kW to 110kW (C110). The integral Grundfos pumps are automatically controlled to best match water flow rate to heat output & further increase appliance efficiency. In addition, the boilers feature an optional connection for an outside sensor to enable the boilers inbuilt weather compensation option. Separate inputs are provided for hot water and central heating demand signals to enable different temperature levels to be set (ideal for underfloor heating systems). The boiler features two sets of flow and return tappings to enable these two temperature levels to be supplied simultaneously. Common applications for this technology are weather compensated heating in conjunction with high temperature flow for DHW production. While the application for which the C90 and C110 were designed is the same as those which other boilers are used, the Keston C90 and C110 have the added advantage of very high efficiency, and small diameter plastic flue which can be extended up to 30m metres horizontally or vertically.

The Keston C90 and C110 uses a variable speed combustion blowers to deliver a premix of gas and air to a downward firing burners in high efficiency, single pass heat exchangers. The flue system is room sealed and fan powered. The ignition is direct spark and fully automatic. The boiler housing is **not** waterproof and should be installed in a position where it will always be dry. Combustion air is drawn from the cabinet which is connected to outside atmosphere via a plastic intake pipe. The cabinet therefore remains under negative pressure at all times the boiler is operating.

The boiler is suitable for connection to open vented or, preferably, sealed systems.

The boiler has two heat exchangers. They are made from highly corrosion resistant stainless steel in corrugated pipe form which provides massive surface area within a compact dimension. The hot combustion gases from the down firing burner pass around the stainless steel pipes imparting heat into the system water. The integral variable speed Grundfos pumps within the appliance cabinet ensures the heat exchanger receives correct water flow when firing. The C90 and C110 are not high water content boilers and do not contain the metal mass, or water volume, of a cast iron or steel boiler. The boiler is of low mass and low water content and therefore responds faster when there is a call for heat. The C90 and C110 feature full user diagnostics, integral frost protection function, automatic pump and fan exercise in periods of inactivity, anti cycle control, dry fire protection and connections for remote lockout and run monitoring (optional accessory).

1.2 BOILER SCHEMATIC

Air is drawn into the boiler through a 100 mm Keston Composite plastic pipe. Gas is mixed with combustion air at the inlet to the fan. The gas flow is automatically regulated by the gas valve according to the air flow generated by the fan. The gas and air are thoroughly mixed in the blower and fed into the burner located at the top end of the heat exchanger module. The gas and air mixture is ignited by a direct spark ignition control system and burns with a blue flame just off the surface of the burner. As the hot products of combustion pass downwards, they are cooled by exchanging heat with the circulating water which enters the heat exchanger at the bottom of the heat exchanger. The optimum heat input is detected by monitoring flow and return temperatures and is adjusted by controlling the speed of the fan. The optimum pump speed is also detected and automatically selected by the boiler.

When the return water temperature is below 55°C, part of the water vapour in the combustion products will condense inside the heat exchanger, thus increasing the boiler efficiency further by releasing the latent heat of condensation. This condensate falls to the bottom of the heat exchanger where it is separated from the flue gases and exits from the

boiler through the condensate drain. Any condensate formed in the flue runs back down the flueway and is drained at the base of the flue connection to the heat exchanger or drain points within the flue.

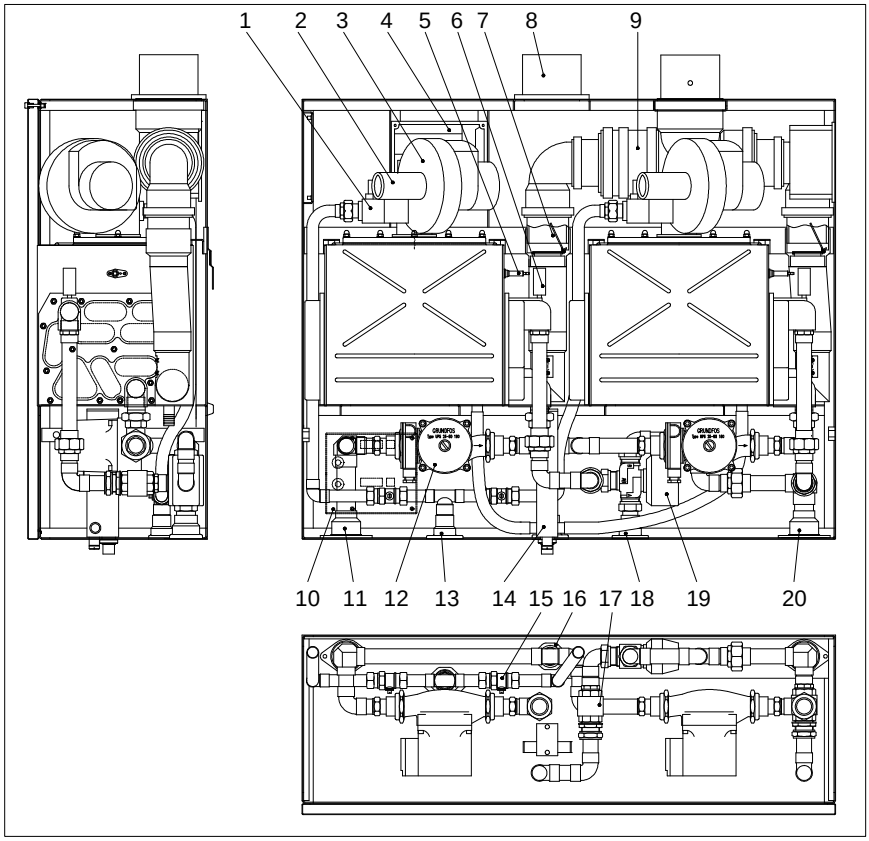

LEGEND

1 Gas Valve
2 Mixing Venturi
3 Combustion Blower
4 Module Control Box
5 Ignitor
6 Auto Air Vent
7 Flue Check Valve
8 Air Inlet
9 Flue Header
10 User Control Panel
11 Main Return Connection
12 Module Pump
13 Gas Connection
14 Condensate Trap
15 Gas Cock
16 DHW Return Connection
17 Check Valve
18 DHW Flow Connection
19 Diverter Valve
20 Main Flow Connection

Fig. 1.2 - Boiler Layout

The condensate is very slightly acidic (about the same acidity as vinegar) and should be piped in a plastic pipe. It is not harmful to the waste disposal system and may be disposed of as normal waste water.

The flue gases are piped in a 100 mm Keston Composite pipe. The temperature of the flue gases are usually around 5°C to 10°C above the temperature of the return water. The flue pipe should be terminated outside the building from where they cannot re-enter the building or any other adjacent building.

The heating level may be controlled by room thermostats, hot water calorifier thermostats, programmer time clocks and energy management systems.

The C90 and C110 feature an integral frost protection function which will operate the pump, regardless of the external controls, should the boiler temperature fall below 7°C. In the event the boiler temperature falls below 3°C the boiler will also fire. This is to avoid damage to the boiler through freezing of boiler water. The boiler will turn off when the flow temperature exceeds 10°C.

The C90 and C110 feature an integral pump exercise function which will run the module pumps, without firing the boiler, for 10 seconds in the event the boiler is on standby for in excess of 24 hours without firing. This is to help prevent seizing of the pump due to long periods of inactivity.

1.3 RELATED DOCUMENTS

The Keston C90 and C110 Condensing Boiler must be installed in accordance with the current issue of the *Gas Safety (Installation and Use) Regulations 1996*, current *IEE Wiring Regulations*, *Building Regulations*, *Building Standards (Scotland) Consolidation*, and the *Bye Laws of the local Water Undertaking*.

In addition, due account must be taken to the following Codes Of Practice:

BS 6891	:	*Low Pressure Installation Pipes*
BS 6644	:	*Installation of gas fired hot water of rated input between 60kW and 2MW*
BS 6880	:	*Central Heating by LPHW*
BS 7593	:	*Treatment of Water in Hot Water Central Heating Systems*
CP342.2	:	*Centralised HW Supply*
IM/2	:	*Purging procedure for non-domestic gas installations*
IM/16	:	*Guidance for installation of gas pipework boosters and compressors for customers premises*
IM/22	:	*Installation guide for high efficiency (condensing) boilers (industrial and commercial appliances)*

For Timber Framed Buildings please refer to The Institute of Gas Engineers document IGE/UP/7:1998.

1.4 PHYSICAL DATA - C90 and C110

Cabinet Height	mm	825
Cabinet Width	mm	1000
Cabinet Depth	mm	337
Top Clearance	mm	350
Side Clearance	mm	25
Base Clearance	mm	150
Front Clearance (for servicing)	mm	300
Weight - Full	kg / (lbs)	147 / (324)
Weight - Empty	kg / (lbs)	127 / (280)
Flow and Return Connection		Rp 1.5" F
DHW Connection		Rp 1” F
Gas Connection		Rp 1" F
Condensate Connection	mm	22mm plastic overflow
IP Rating		IP20 (IPX0)
Flue and Air Intake Material	100mm Keston Composite	
Flue Pipe Size (nominal bore)	mm / (in)	100 / (4)
Air Intake Pipe Size (nominal bore)	mm / (in)	100 / (4)
Max. Air Intake Length	m	59
Max. Flue Outlet Length	m	30
Max. Total Flue Outlet and Air Intake Length	m	60

Keston Boilers Ltd declare that there are no substances harmful to health within the appliance or used during the production of the appliance.

The C90 and C110 are intended for domestic and commercial EMC environments and on a governed G20 meter supply.

1.5 PERFORMANCE DATA - C90

Max. Input (Gross CV)	kW/(Btu/h)	91.2 (311,200)
Min. Input (Gross CV)	kW/(Btu/h)	25.8 (88,000)
Max. Output To Water		
(80/60°C Flow/Return)	kW/(Btu/h)	79.9 (272,500)
(50/30°C Flow/Return)	kW/(Btu/h)	89.8 (306,800)
Min. Output To Water		
(80/60°C Flow/Return)	kW/(Btu/h)	22.6 (77,000)
(50/30°C Flow/Return)	kW/(Btu/h)	25.2 (86,000)
Max. Burner Press.-Hot *(Factory Preset)*	mbar/(in w.g)	0
Gas Consumption After 10 mins	l/s / (Ft^3/hr)	2.414 (307)
Max. Operating Flow Temp.	°C	82
Max. Head (Open Systems)	m / (ft)	30.5
Max. Press. (Sealed System)	bar	2.70
Min. Head (Open Systems)	m	3.0
Inlet Gas Pressure	mbar/(in w.g)	20
Recommended Temp Diff.	°C	8 to 20
Electrical Supply		230V 50Hz
Power Consumption (Max)	W	520
Power Consumption (Standby)	W	16
Type of Gas		G20 Natural Gas
Optimum Flue Gas CO_2 Level	%	8.3 ±0.2
Expected CO/CO2 Ratio (at max rate)		0.001
Destination Countries		GB/IE

1.6 PERFORMANCE DATA - C110

Max. Input (Gross CV)	kW/(Btu/h)	113.0 (385,600)
Min. Input (Gross CV)	kW/(Btu/h)	28.6 (97,500)
Max. Output To Water		
(80/60°C Flow/Return)	kW/(Btu/h)	99.4 (339,400)
(50/30°C Flow/Return)	kW/(Btu/h)	110.4 (377,000)
Min. Output To Water		
(80/60°C Flow/Return)	kW/(Btu/h)	25.0 (85,300)
(50/30°C Flow/Return)	kW/(Btu/h)	28.6 (97,500)
Max. Burner Press.-Hot *(Factory Preset)*	mbar/(in w.g)	0
Gas Consumption After 10 mins	l/s / (Ft^3/hr)	2.992 (380)
Max. Operating Flow Temp.	°C	82.00
Max. Head (Open Systems)	m / (ft)	30.5
Max. Press. (Sealed System)	bar	2.70
Min. Head (Open Systems)	m	3.0
Inlet Gas Pressure	mbar/(in w.g)	20.0 / (8.0)
Recommended Temp Diff.	°C	8 to 20
Electrical Supply		230V 50Hz
Power Consumption (Max)	W	520
Power Consumption (Standby)	W	16
Type of Gas		G20 Natural Gas
Optimum Flue Gas CO_2 Level	%	8.8 ±0.2
Expected CO/CO2 Ratio (at max rate)		0.001
Destination Countries		GB/IE

IMPORTANT

This product contains ceramic fibre boards, which although not regarded as a risk, contain ceramic fibre which may cause temporary irritation to eyes, skin and respiratory tract. The fibres are held in place by inorganic binders. Therefore as long as the boards are not disturbed they will not be released. Since the boards are non-serviceable parts there should be no risk.

To ensure that the release of fibres from these RCF articles is kept to a minimum, during installation and servicing we recommend that you use a HEPA filtered vacuum to remove any dust accumulated in and around the appliance before and after working on the appliance. When replacing these articles we recommend that the replaced items are not broken up, but are sealed within heavy duty polythene bags, and clearly labelled as RCF waste. RCF waste is classed as a stable, non-reactive hazardous waste and may be disposed at a landfill licensed to accept such waste. Protective clothing is not required when handling these articles, but we recommend you follow the normal hygiene rules of not smoking, eating or drinking in the work area and always wash your hands before eating or drinking.

GAS SAFE REGISTER CONTACT INFORMATION

The boiler should be installed and serviced only by GAS SAFE REGISTER registered operatives. All GAS SAFE REGISTER registered Installers carry a GAS SAFE REGISTER ID card, and have a registration number. You can call GAS SAFE REGISTER direct on 0800 408 5500.

This appliance is not intended for use by persons (including children) with reduced physical, sensory or mental capabilities, or lack of experience and knowledge, unless they have been given supervision or instruction concerning use of the appliance by a person responsible for their safety.

Children should be supervised to ensure that they do not play with the appliance.

1.7 OPTIONAL ACCESSORIES

A range of accessories are available from Keston Boilers Ltd to compliment an installation.

Description	Part Number
Floor Standing Support Frame	C.34.0.06.00.0

2. BOILER LOCATION

All dimensions in mm.

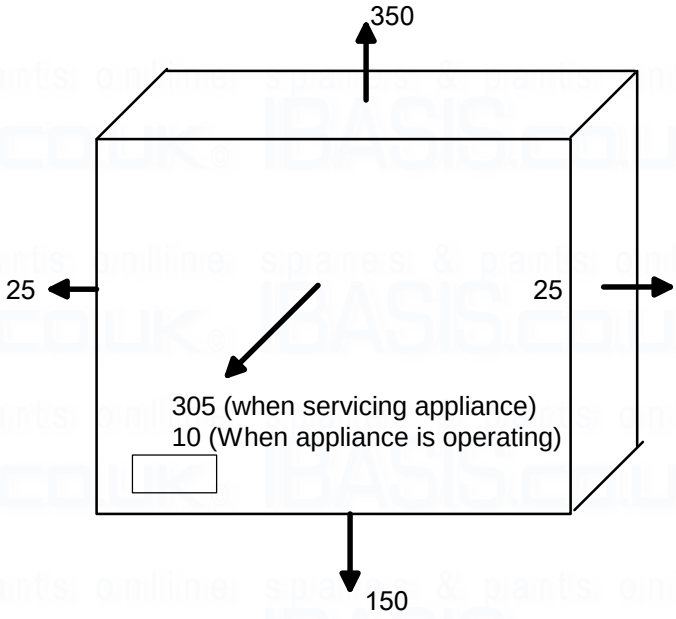

2.1 DIMENSIONS AND MINIMUM CLEARANCES

The boiler must be installed in minimum clearances shown to allow subsequent servicing, and safe operation. However, larger clearances may be required during installation.

2.2 SERVICE CONNECTIONS

Gas, water, air and flue pipe, condensation, and electrical connections are as shown. Gas : 1 inch BSP female. Flow/Return 1.5 inch BSP female. DHW/Zone 2 connection 1 inch BSP female

2.3 POSITION

The C90 and C110 are not suitable for external installation. The boiler may be installed in any room or internal space, although particular attention is drawn to the requirements of the current IEE Wiring Regulations and, in Scotland, the electrical provisions of the Building Regulations applicable in Scotland, with respect to the installation of the boiler in a room or internal space containing a bath or shower.

Where a room-sealed appliance is installed in a room containing a bath or shower, any electrical switch or appliance control, utilising mains electricity, should be so situated that it cannot be touched by a person using the bath or shower. The C90 and C110 are classified as IP20 (IPX0).

The wall on which the boiler is mounted must be of suitable load bearing capacity and must be non-combustible.

Figure 2.1.2 Dimensions

All dimensions in mm.

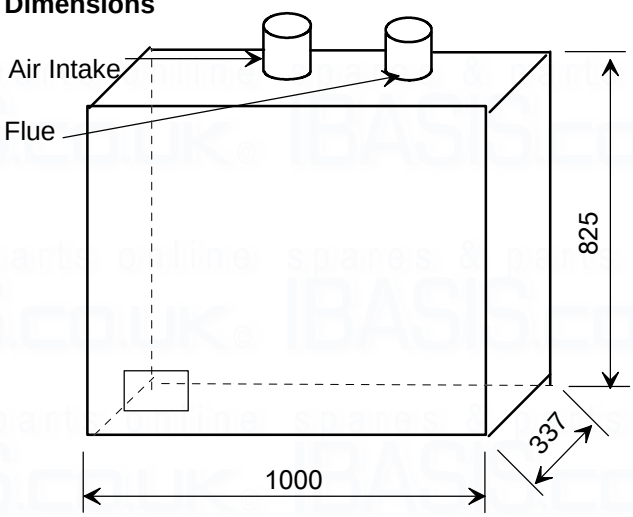

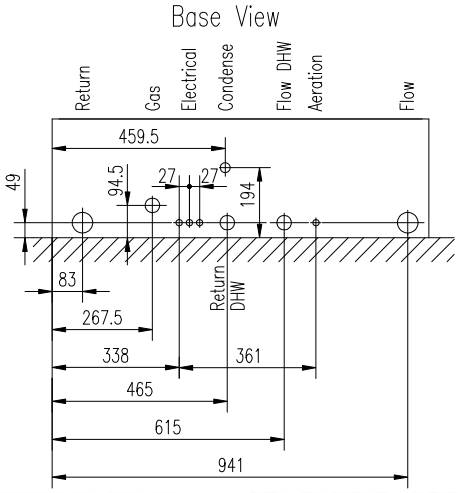

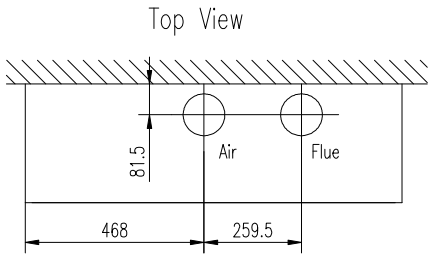

Service Connection Locations
All dimensions are in mm

Compartment installation is permitted. Such compartments must be constructed in accordance with BS6798.

IMPORTANT : It is not recommended to install the boiler on a studded wall or similar. It is possible that vibration from the boiler could be amplified and transmitted to other parts of the property.

The Keston C90 and C110 can be located virtually anywhere desired provided that all regulations are complied with. Because of the boiler's compact size and venting flexibility, the installation is not limited to a boiler room setting. Before locating the boiler near a living space consider whether the sounds generated by the boiler will be objectionable. The boiler may be located within a cupboard enclosure to reduce noise levels if located within a living space.

2.4 ELECTRICAL

2.4.1 Electrical Connections

The boiler must be connected to a permanent 230V ~ 50Hz supply, fused at 5A. **The boiler has two thermostats and will therefore accept up to two switched live signal inputs at 230V, such as heating and hot water demand. For single signal systems switched live 1 may be used on its own. When serving a demand from switched live 1 only, both burner modules are assigned to serving the demand at the required temperature setpoint. In the event the boiler receives a signal from switched live 2, burner module 1 is diverted away from the main flow output and onto the DHW flow output. Burner module 1 will then produce heat to satisfy the heat demand on switched live 2 at the temperature setpoint requested on thermostat 2. In the event a demand is receive simultaneously from switched live 1 and 2 the boiler will service both demands at the two different setpoints.** Wiring external to the boiler must be in accordance with current I.E.E wiring regulations and local regulations.

The method of connection to the mains electricity supply **must** facilitate complete electrical isolation of the boiler, preferably by the use of a fused, unswitched three pin plug and a shuttered socket-outlet, both complying with the requirements of BS 1363. There must be only one common method of isolation for the boiler and its control system.

The appliance must be connected to the 5A supply via a fused double-pole switch having at least 3 mm (1/8 inch) contact separation in both poles, serving only the boiler and the system controls.

The connection point to the mains supply should be readily accessible and adjacent to the boiler, except for rooms containing a bath or a shower. Refer to section 2.3 Position.

2.4.2 External Wiring & Controls

1. The boiler is designed so that **all** control wiring is external to the boiler.
2. A programmer may be used with zone valves to give independent control of central heating and hot water.
3. Control signal inputs must the 230VAC "switched live" type.
4. A Keston 90/110 outside temperature sensor may be connected as an option. The boiler will automatically detect this connection and will operate on a "weather compensation" basis when receiving a signal on switched live 1. Screened cable (80% density, 4-core) must be used to connect the outside temperature sensor.

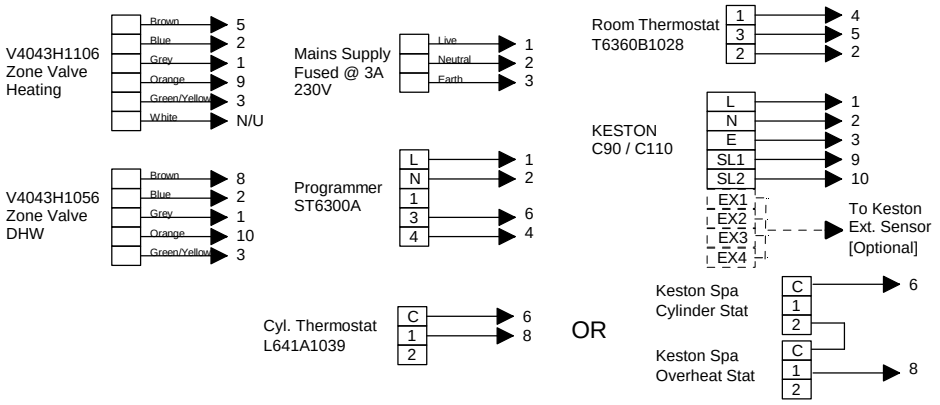

2.4.4 Wiring Example - Honeywell S-Plan for DHW and (Optional) Weather Compensated Heating Control

2.5 BOILER SIZE SELECTION

The C90 and C110 will automatically adjust heat output and pump speed to match the system requirements at any given time. Efficiency and combustion levels are maintained at optimum levels throughout the possible output range. The C90 and C110 are therefore suitable for all systems with a total heat load within the maximum range of the boiler. However, when serving a demand on switched live 2 the available power to the switched live 1 demand is halved.

2.6 GAS SUPPLY

A gas meter should be connected to the service pipe by the local gas region or their contractor. An existing meter should be checked preferably by the gas region to ensure that the meter is adequate to deal with the rate of gas supply required. Installation pipes should be fitted in accordance with BS 6891.

Minimum/Maximum Gas Pressure:

Natural gas pressure before the gas valve must be maintained at between 18 mbar (7.2 in WG) and 22 mbar (8.8 in) while the boiler is running.

Gas pressures above or below these levels will lead to problems associated with the gas valve's internal pressure regulator.

Supply pipes to the boiler must not be sized less than the boiler inlet connection (28 mm). Due consideration must be given to the supply pressure to other gas appliances in the premises. Reduction in dynamic gas supply pressure will result in intermittent ignition failures. Ensure gas supply pipe work is adequately sized for the length of run from the meter to the boiler at a supply rate of 92kW for the C90 and 114kW for the C110 model.

2.7 WATER SYSTEMS

All piping must be installed in accordance with all applicable local and Water Supply Bylaws for forced hot water heating systems.

Consideration must be given to pipe capabilities and pressure drop through the piping when selecting pipe sizes. **The primary pipe connections to the boiler must be sized according to the system load, not dictated by the boiler connection sizes.**

Water treatment must be carried out to BS 7593 : Treatment of Water in Hot Water Central Heating Systems.

a. The C90 and C110 are suitable for use on open, vented water systems with combined feed and vent of 32mm nominal diameter **fitted to the boiler return**.

b. It is preferable for use on sealed water systems, provided the appropriate components required (see Section 2.7.2 Sealed Systems) are included in the system.

c. Any system must be thoroughly flushed clean of grease, dirt and debris, prior to connection with the boiler. A trap may be installed in the flow line to collect any solder, or other debris, from the installation.

d. All water systems must be constructed to comply with requirements of the Local Water Authority.

e. Jointing should be either with capillary, threaded or compression fittings. Pipes should have a gradient to ensure air is passed easily to vent points and water flows readily to drain points.

f. Draining taps must be located in accessible positions which permit the draining of the boiler and hot water storage vessel. Draining taps should be at least 22 mm in nominal size and be in accordance with BS 2879.

AIR VENT POINTS

g. These must be fitted at all high points where air will naturally collect and must be sited to allow complete draining of the system.

h. Where thermal stores are to be used the thermal store supplier should be consulted as to the compatibility of the thermal store with a Keston C90 and C110. Thermal store units where the boiler directly heats an open vented thermal store are not suitable for use with the C90 or C110.

2.7.1 Open Vented Systems

A typical system is shown in Figure 2.7.1 which includes a combined feed and vent. **Note that the combined feed and vent must be fitted to the primary RETURN.** Note that the valve between the boiler flow and the open vent is a three way blowdown type valve. Note that the minimum static head required is 3m at the top of the boiler. If the cold feed/vent is not brought to the low loss header as shown then the pressure loss across the heat exchangers may have to be taken into account when estimating the static pressure. Cold Feed/vent size must comply with BS6644.

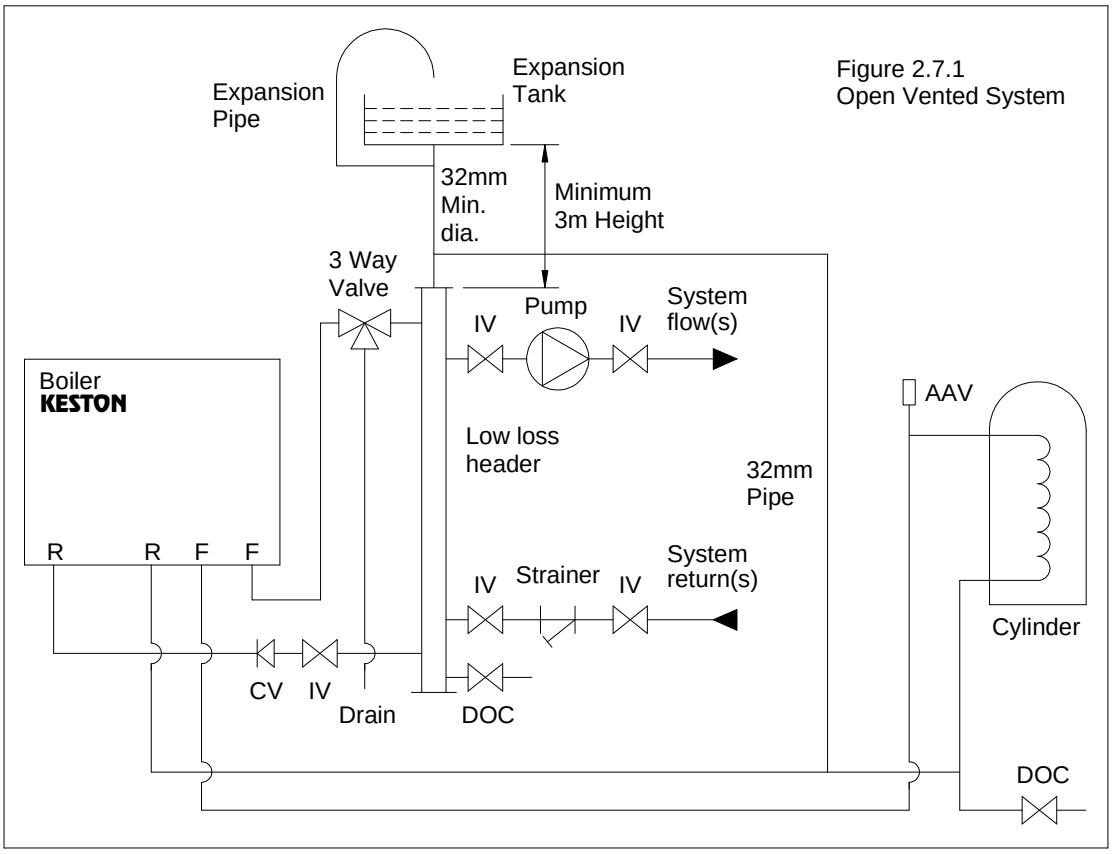

Figure 2.7.1
Open Vented System

Although suitable for open vented systems with combined feed and vent arrangements, the C90 and C110 are low water content boilers. As such, any air entrainment within the system water will produce boiler "kettling". It is therefore recommended, if in any doubt, to consider the use of sealed systems where possible.

2.7.2 Sealed Systems

Sealed systems must be designed in accordance with BS 6644 and BS 7074 Pt1. A typical sealed system is shown in Figure 2.7.2. It must include :

(i) A safety valve fitted on the flow, adjacent to the boiler. It must be non adjustable and preset to 3 bar. A drain pipe must be attached, at least as big as the valve connection, and routed to drain in any area not hazardous nor where it may be subject to freezing.

(ii) An expansion vessel complying with BS 4814 and sized in accordance with the requirements of BS 5449 and BS 7074 Pt 1. **The vessel must be positioned on the primary return to the boiler.** Table 2.7.2 Expansion Vessel Selection provides guidance for the correct expansion vessel size to use.

(iii) A filling point, in accordance with local water authority requirements.

(iv) A method of system make-up (automatic or manual), in accordance with local water authority requirements.

(v) There must be no permanent connection of mains water to the boiler system.

(vi) The installation must be designed to work with flow temperatures of up to 110 °C.

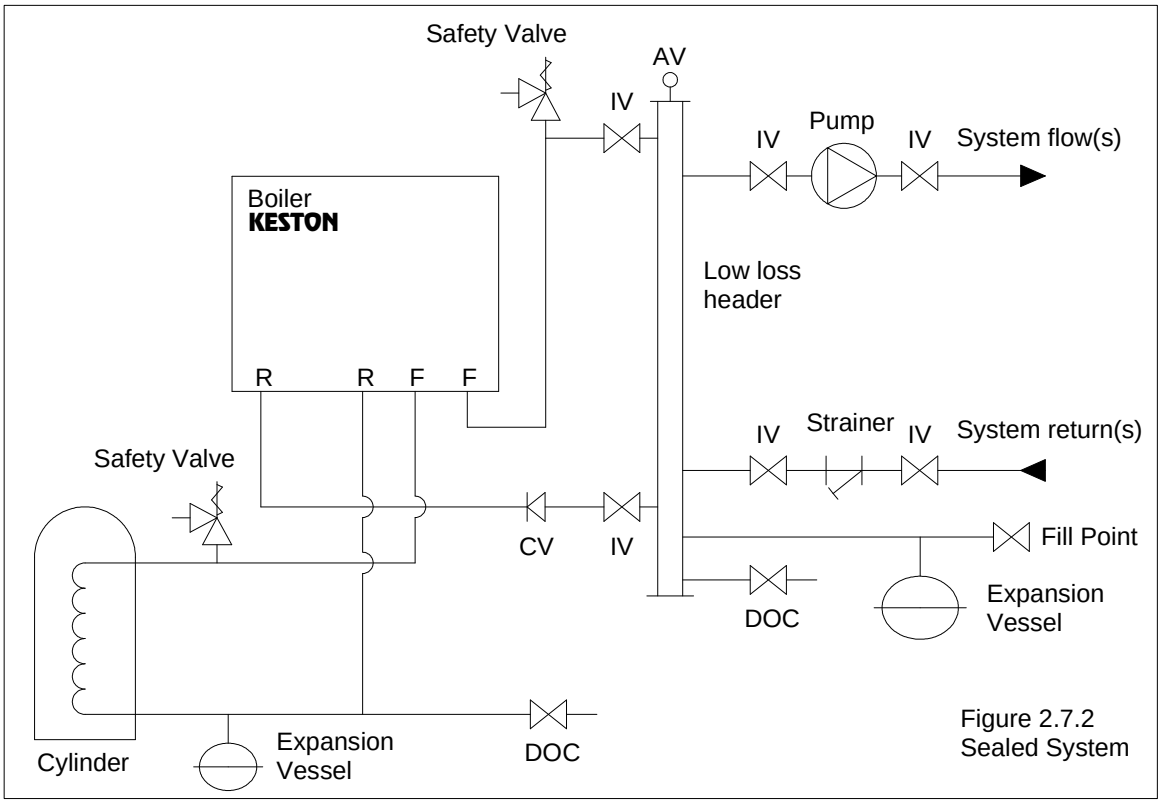

Figure 2.7.2
Sealed System

All components of the system including the heat exchanger of the indirect cylinder must be suitable for a working pressure of 3 bar and a temperature of 110 °C. Care should be taken in making all connections that the risk of leakage is minimised.

Safety Valve Setting	3.0 bar		
Vessel charge & initial system pressure.	0.5 bar	1.0 bar	1.5 bar
Total Water Content of system	**Expansion**	**Vessel**	**Volume**
25 litres	2.1	2.7	3.9
50 litres	4.2	5.4	7.8
75 litres	6.3	8.2	11.7
100 litres	8.3	10.9	15.6
125 litres	10.4	13.6	19.5
150 litres	12.5	16.3	23.4
175 litres	14.6	19.1	27.3
200 litres	16.7	21.8	31.2
225 litres	18.7	24.5	35.1
250 litres	20.8	27.2	39.0
275 litres	22.9	30.0	42.9
300 litres	25.0	32.7	46.8
Multiplying factor for other system volumes	0.0833	0.109	0.156

Table 2.7.2 Expansion Vessel Selection

2.7.3 Hot Water System (if applicable)

The hot water storage vessel must be of the indirect type. DIRECT CYLINDERS MUST NOT BE USED. Further guidance is provided in BS 1394.

The Keston Spa range of stainless steel unvented cylinders are an ideal option for use with the Keston range. The Keston Spa range combine exceptional recovery times with durable, long life stainless steel construction and all associated controls. Contact Keston Boilers Ltd for information

2.7.4 Balance Headers - Multiple Boiler Installations

Boiler water flows are critical to the operation of the boiler. If flow cannot be maintained through the system pipework to maintain the minimums required by the boiler, the boiler will “kettle” or even produce steam which can damage the heat exchanger and will invalidate the heat exchanger warranty. The implementation of a balance header, as shown in the above schematics, is required to ensure adequate circulation is maintained through the boiler by the integral shunt pumps, regardless of system conditions.

The size of the balance header is dependant on the number of boilers serving the header. A guide to sizing is given below:

Total Boiler Output (Max)	Header Diameter
Up to 110kW	3”
Up to 220kW	4”
Up to 330kW	4.5”
Up to 440kW	5”

When assembling the balance header the following design considerations must be observed:

A) Each boiler must have its own flow and return connections to the balance header pipe. Common flow and return connections with the other boilers will cause reverse circulation effects to occur.

B) The minimum distance between the system flow and return connections is 600mm.

C) A drain off point should be fitted to the base of the header, along with cleaning access, for sludge removal.

D) The top of the header should be vented.

2.7.5 Air Elimination

In the initial charge of water to the boiler system and in all subsequent additions of water to the system some air will be dissolved in the water. As the water is heated the air is driven out of the solution and will collect in high spots in the system. **These air bubbles can interfere with pumping and heat transfer and must be eliminated.**

Installation of air bleed valves at the high spot(s) in the system will allow for air elimination when filling the system and will allow re-venting in a day or so after all air has been driven out of solution.

2.7.6 System Pump Selection

The C90 and C110 feature integral circulating pumps which have sufficient excess head to drive through the balance header. However, a system pump will be required to provide circulation of water from the balance header, around the system. This system pump should be selected to provide the required system flow rate at the pressure drop created by the index circuit.

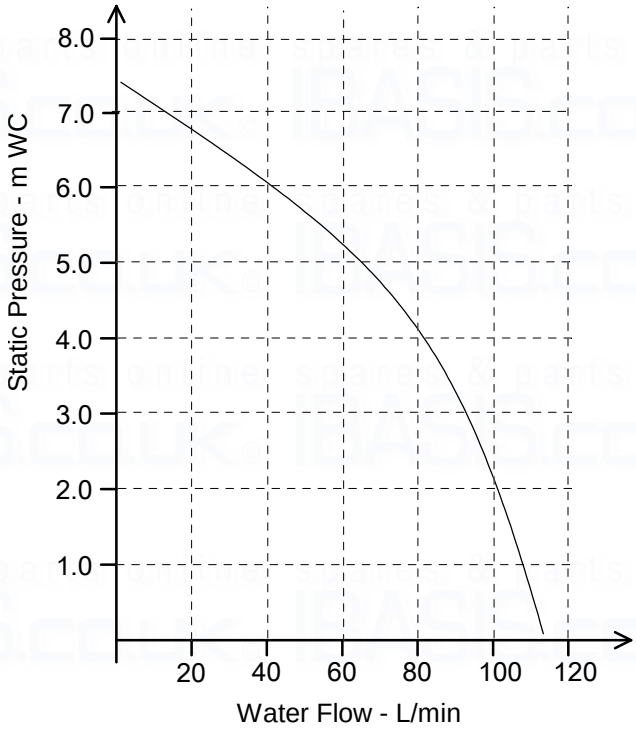

Fig 2.7.6 Available Pump Head Graph

2.8 FLUE SYSTEM

NB: When installing a replacement boiler a new flue system <u>must</u> be used. <u>Do not re-use the existing boiler flue installation.</u>

2.8.1 Design

Individual air supply and flue outlet pipes are used. The material used for flue outlet &/or air inlet must be Keston Composite Pipe of an internal diameter of not less than 100mm. Suitable pipe and fittings can be obtained from Keston Boilers Ltd via its appointed distributors.

Both flue outlet terminal and air inlet terminal are supplied and are illustrated in Figure 2.8.1. Both terminals are identical.

.

Although both terminals are identical great care must be taken to ensure that the air intake is positioned in such a way as to ensure rain cannot enter the air intake pipework. Boiler damage due to water entry through the air intake pipework is not covered under the appliance warranty.

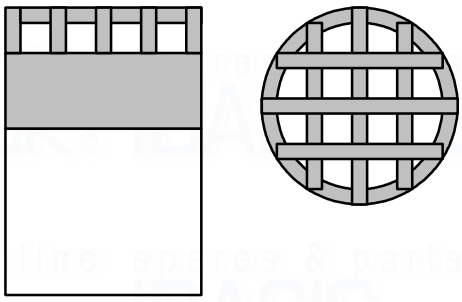

Flue Outlet/Air Inlet Terminals

Figure 2.8.1 : Terminals

2.8.2 Maximum Lengths

The maximum lengths of both air inlet pipe and flue outlet pipe, when no bends are used, are as detailed below.

Minimum Flue Length	:	0.5m
Minimum Air Intake Length	:	0.5m
Maximum Air Inlet Length	:	59.0 m
Maximum Flue Outlet Length	:	30.0 m
Maximum Total Flue and Air Intake Length	:	60.0 m

However, each bend used has an equivalent length that must be deducted from the maximum straight length stated above. Knuckle bends must not be used.
A 92.5° sweep elbow is equivalent to 1.0m straight length.

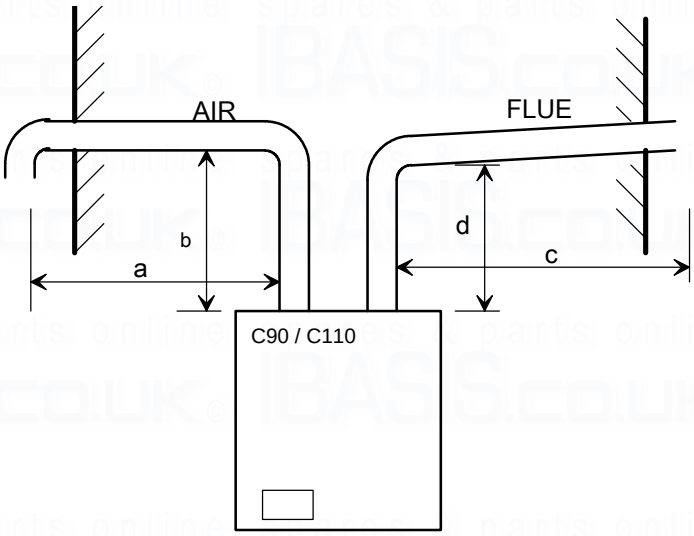

Figure 2.8.2 : Flue & Air Maximum Length Example

Example
Air inlet uses two 92.5° sweep elbows. Hence, maximum length permissible (i.e. a+b in figure 2.8.2) = 59.0m - 1.0m - 1.0m = 57.0m

Flue outlet uses one 92.5° sweep elbow. Hence, maximum length permissible (i.e. c+d in figure 2.8.2) = 30.0m - 1.0 m = 29.0m

2.8.3 Slope

'Horizontal' flue outlet pipework MUST slope at least 2 degrees (32 mm per metre run) downwards towards the boiler where 100 mm Keston Composite pipe is used. Pipework can be vertical. Only swept elbows can be used.
Air inlet pipework can be truly horizontal or vertical, or sloping in a downward direction towards the boiler but in this case rain, etc., must be prevented from entering the pipe. **There must be no troughs in any of the pipework, whether it be air inlet or flue outlet.**

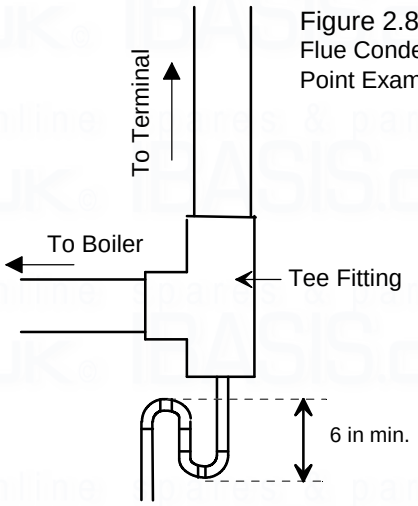

Figure 2.8.3 : Flue Condensate Drain Point Example

Due the low temperature of the flue gases further condensate will form within the flue system. Drain points, with suitable traps, must therefore be incorporated within the flue system at the base of vertical flue sections in excess of 8m, for 100mm Keston Composite pipe flue systems. These additional condensate drains must be run to discharge as

detailed in section 2.11. Such drain points can be formed using standard plastic fittings. Refer to the example in Figure 2.8.3.

2.8.4 Terminations

Air inlet terminals must be facing horizontally or downwards to prevent entry of rain into the terminal and positioned to ensure only fresh air is drawn into the boiler. The air terminal must be located outside of the building.
Flue and air terminals must be positioned so that flue products are not drawn into the air inlet. Site specific wind conditions should be considered to achieve this.

Drawing of combustion air directly from a ventilated boiler room invalidates the heat exchanger warranty.

The flue outlet terminal is designed to face outwards but can, if desired, be adapted to face in any direction BUT must not be directed in the region of the air inlet. Where the air and flue terminals are located in close proximity, the flue terminal should be located above the level of the air intake terminal
The two terminals are subject to the requirements of BS 5440 Pt 1 for clearances from features of the building although some can be decreased to the values indicated.

Dimensions (mm)	Flue Terminal	Air Inlet
A Below or beside openable window, air brick, etc.	500	50
B Below gutters, soil pipes, drain pipes.	75	75
C Below eaves (unventilated)	300	50
D Below balconies or car port roof.	200	50
E From vertical drain or soil pipes.	75	50
F From internal or external corner or boundary lines	600	50
G Above ground or balcony or roof.	300	100
H From surface or boundary line facing a terminal	600	100
I From terminal facing a terminal.	1,200	1,200
J From opening in a car port.	1,200	100
K Vertically from terminal on same wall.	1,500	1,500
L Horizontally from terminal on same wall.	300	300

Table 2.8.4 Minimum Flue Terminations & Air Inlet Dimensions

The Keston C90 and C110, as with any condensing boiler, will generate a condensate "plume" from the flue terminal in all weather conditions. Consideration must therefore be given to the effect of this "plume" when selecting a location for the flue terminal. It is the responsibility of the installer to ensure the selected terminal location does not cause nuisance.

It is advisable for horizontal flue terminals to place a 45° elbow at the end of the flue to direct the condensate plume up and away from the property. If the air intake is within 1000mm of the flue outlet the air must not terminate at a level above that of the flue

2.8.5 Clearances From Wall

Flue outlet and air inlet terminations must be at least 40 mm from the wall face.

2.8.6 Distance Between Flue Outlet & Air Inlet

There is no maximum - the terminations must not be on opposite sides of the dwelling but can be in areas of unequal pressure

A minimum clearance of at least 500mm must be left between the terminations and the flue terminal must be directed away from the air intake terminal.

2.8.7 General Installations

All parts of the system must be constructed in accordance with BS 5440 Part 1, except where specifically mentioned in these instructions.

All pipe work must be adequately supported.

All joints other than push-on or plastic compression connectors must be made and sealed with solvent cement suitable for Keston Composite pipes and conforming to BS 6209: 1982.

Consideration must be given to Corgi/Gas Safe bulletin TB200/TB008 regarding flues in voids.

The boiler casing must always be correctly fitted to the boiler when leaving the appliance operational.

External wall faces and any internal faces of cavity walls must be made good.

2.9 AIR SUPPLY

The C90 and C110 are room sealed appliances and therefore do not require purpose provided ventilation to the boiler room for combustion air.

2.10 COMPARTMENT INSTALLATION

The C90 and C110 models operate with very low heat emission levels. As a results the boilers can be installed in a compartment without ventilation for cooling purposes. However, the cupboard or compartment must not be used for storage.

2.11 CONDENSATE DRAINAGE

Being a condensing boiler, the C90 and C110 are fitted with a condensate trap at the base of the heat exchanger and flue assembly, with facility to connect to a drain point underneath the appliance.

The connection to the boiler condensate outlet and the condensate discharge pipe work within the dwelling must be sealed.

Use only plastic piping and do not reduce below 22 mm internal diameter within the dwelling. Condensate should preferably be drained into the sanitary waste system or, alternatively, the rainwater system of the property in most cases. Ensure in all cases that the disposal of the condensate is in accordance with any local regulations in force.

Termination of the pipe must be either at a branch or stack internal to the house, or externally at an open gully. Alternatively, discharge into a purpose made condensate soakaway can be considered. Existing or purpose built drains must use suitable corrosion resistant material as condensate is mildly acidic.

The connection to the condensate drain of the boiler, and the condensate drain pipework itself, should be properly sealed to ensure there is no possibility of leakage into the dwelling.

A minimum slope downwards towards the drain of 1 in 20 is essential. Freezing of the termination and pipework must be prevented. Any drainage pipes outside the property must be at least 32 mm *inside* diameter.

3. INSTALLATION OF THE BOILER

Read Chapter 2 - Boiler Location and decide upon the position of the boiler.
Installation of the boiler is straightforward but consideration must be given to access to allow flue and air pipes to be pushed through walls and ceilings. The order in which the components are installed will depend upon particular site conditions, but in general it will be easiest and most accurate to install the boiler and then build up the flue outlet and air inlet pipes to the terminal - this is the sequence described.

3.1 WALL MOUNTING BRACKET

a. Place the bracket on the wall horizontally with the pre-drilled holes at the bottom.
b. Drill through the centre hole of the brackets, plug the hole and fix in position.
c. Using a spirit level make sure the brackets are completely level individually and relative to each other and mark the position of the other screw holes.
d. Remove the bracket and drill the holes in the positions marked. Plug these holes.
e. Screw the bracket to the wall using screws of an appropriate size for the wall type (No. 12 x 2 inch wood screws normally suffice).

All dimensions in mm.

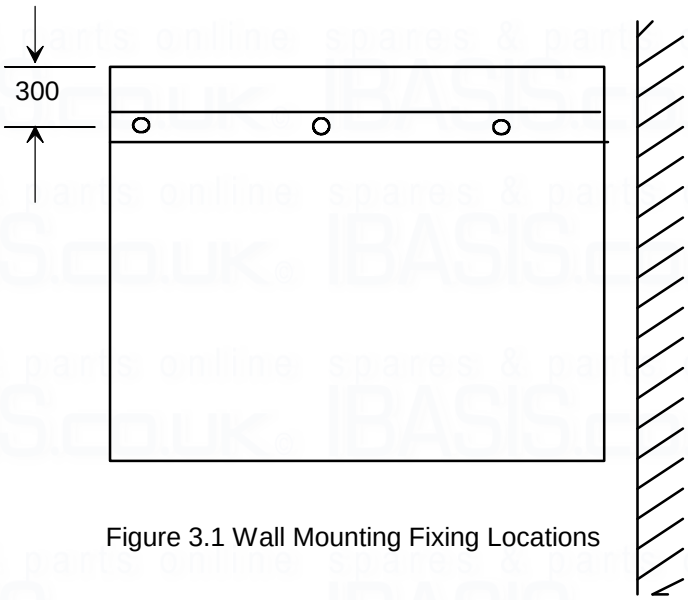

Figure 3.1 Wall Mounting Fixing Locations

3.2 MOUNTING THE BOILER - CAUTION MULTI-PERSON LIFT

a Using the detachable side lift handles supplied or via winch, lift and locate the upper rear lip on the boiler to the boiler wall bracket.
b Move the boiler sideways to centralise the boiler on the bracket.

3.3 FLOOR STANDING FRAME - OPTIONAL (Part No C.34.0.06.00.0)

If the optional floor standing frame is selected the frame should first be assemble and secured firmly to the plant room floor. Suitable assembly instructions are included with the floor standing frame pack.

Lift the boiler and lower into position onto the frame.

3.4 ASSEMBLY PRACTICE

Remove all plastic debris and burrs when installing air intake piping. Plastic filings caused by cutting Keston Composite plastic pipe must not be allowed to be drawn into the combustion air blower. Prevent dust entering the air intake when cutting on building sites. Blower failure which is determined to be caused by plastic filings or other debris will not be covered by guarantee.

3.5 INSTALLING FLUE AND AIR PIPES

When installing a replacement boiler, a new flue system must be fitted. DO NOT RE-USE THE ORIGINAL FLUE SYSTEM.

Remember the flue pipe must slope downwards back towards the boiler and this is best achieved using 92.5° bends.

a. From the two connections on the boiler, mark the positions of the two holes for the flue and air pipes on the wall(s) or ceiling. To allow access to drill the holes it may be necessary to temporarily remove the boiler. If the boiler stays put then it is imperative that the front doors are closed and the two plastic pipes capped off

whilst drilling. Under no circumstances must debris from the wall or cut pipes be allowed to enter the appliance or the plastic pipework.

b. Drill the two holes in the wall/ceiling, preferably using a core drill.

c. Always thoroughly deburr all pipes and, most important, remove shavings from within the pipe.

d. Assemble the pipework from the boiler connections to the exit from the first wall/ceiling (remount the boiler if removed). When pushing pipe through walls, ensure grit and dust is not allowed to enter the pipe.
ENSURE PIPES ARE FULLY ENGAGED INTO SOCKETS.
Connect the condensate drainage system and fill the condensate trap by pouring water down the boiler flue spigot (See Section 3.6 Condensate Drainage).
Make the final connection of flue and air pipe to the boiler using push on plastic couplings. Ensure that the connectors are set vertically otherwise leakage of condensate may occur which will corrode the casing. Do not use adhesive on the 'push on' end of connecting couplings.

e. Using the same methods drill any further holes (always covering existing pipework), cut and assemble the pipework.

f. From outside, complete the two terminations - See Section 2.8 Flue System and make good all holes.

g. Support any pipes whose route could be displaced either of its own accord or by accident. Any horizontal run over 1m or vertical runs of any length must always be supported. Brackets should be placed at intervals of approximately 1m.

h. Check all connections for security.

3.6 CONDENSATE DRAINAGE

Connect the condensate drainage system to the boiler. It is advisable to use a detachable fitting at connection to the boiler to enable easy removal for servicing.

Fill the condensate trap by pouring water into the boiler flue spigot until water is seen to flow freely from the condensate drainage system. Make the final connection of flue pipe to the boiler.

Details are provided in Chapter 2 - Section 2.11 Condensate Drainage
Connection : 22 mm plastic pipe.

3.7 WATER SYSTEM

Connect the flow and return pipework to the boiler. Details of system requirements are given in Chapter 2 - Section 2.7 Water Systems.
Connections : 1.5" BSP F.

3.8 GAS SUPPLY

Connect the gas supply to the appliance. Details of gas supply requirements are given in Chapter 2 - Section 2.6 Gas Supply. Supply of adequate gas pressure **(with the boiler running)** is critical to ensure reliable operation of the boiler.
Connections : 1 inch BSP F.

3.9 ELECTRICAL SUPPLY

The entry point(s) for the electrical supply cable(s) is in the base of the appliance (see Section 2.2 Service Connections fig. 2.1.2) via three cord grip bushes. Feed the cable(s) through its bush and route inside the cabinet to the connection strip located to the front top left of the cabinet.

1. The electrical supply must be as specified in Chapter 2 - Section 2.4 Electrical.
   WARNING : THIS APPLIANCE MUST BE EARTHED

2. All external controls and wiring must be suitable for mains voltage. Supply wiring should be in PVC insulated cable not less than 1.0mm^2 to BS 6500 Table 16 (material code H05VV-F).
3. The permanent live supply connection may be via a 5 amp fused double pole switch, serving only the boiler. (Refer to Chapter 2 - Section 2.4 Electrical Supply).
4. Securely tighten the terminal screws and route the cable through the re-openable cable clips. Ensure all cables are secured and that the cord grip bush is tightened to securely grip the main cable at entry to the cabinet.
   The supply cable(s) must be connected to the main terminals as follows:-

Terminal N	**-**	**Blue wire (Neutral) for 5A permanent supply**
Terminal L	**-**	**Brown wire (Live) 5A permanent supply**
Terminal E	**-**	**Yellow/Green Wire (Earth)**
Terminal SL1	**-**	**230V Demand Signal from main zone**
Terminal SL2	**-**	**230C Demand Signal from DHW/Zone 2**
Terminals 1,2,3,4		**Optional Keston C90/C110 Outside Temperature Sensor. This will activate weather compensated flow setpoint when responding to a demand signal on SL1**

Ensure connection is made such that if the cable slips in its anchorage the current carrying conductors become taut before the earthing conductor.

3.10 EXCHANGING A BOILER

Before removing an existing boiler add Fernox Supafloc , or equivalent cleaning agent, in accordance with the manufacturers instructions. Open all radiator valves and fire the boiler. When the system is fully heated, shut off the gas supply and drain down the central heating system.

Important

The Keston condensing boiler contains components which could be damaged or blocked by grease, dirt or solder etc. It is essential that sludge or scale is removed from an existing system.

The guarantee provided with the Keston does not cover damage caused by system debris or sludge.

Connect the new boiler as instructed in this manual and fit in accordance with Sections 3.1 to 3.9

For sealed systems, fill to a pressure of about 2.7 bar. Check the complete system for water soundness. If leaks need to be rectified using flux or solder the system must be flushed cold again before proceeding.

Reduce the pressure to the Initial System Design Pressure for sealed systems, if applicable. Vent the system.

Gas Supply

The complete gas installation up to the boiler service cock must be checked for soundness. BS 6891.

Electrical Installation

Carry out preliminary electrical safety checks, i.e. Earth continuity, Polarity, Resistance to Earth, Short Circuit using a suitable test meter.

Initial Firing

The gas pressure setting is factory adjusted to within the required range and should not normally need re-adjustment. If the reading is incorrect then check such

factors as soundness of the air and flue pipe joints, pressure sensible joints and the gas inlet pressure (20 mbar required). If all joints are sound and the gas inlet pressure is satisfactory set the gas pressure. Full details of this procedure are given in Section 4.7 Checking The Gas Pressure. This will ensure that combustion is good enough to allow combustion fine tuning to take place.

Combustion Fine Tuning

It is advisable on all installations that the combustion quality is checked by measuring the carbon dioxide (CO_2), or oxygen (O_2), level. This procedure is detailed in Section 4.6 Combustion Testing. Badly tuned combustion will lead to reduce the life of the boiler and invalidate the warranty.

4. COMMISSIONING OF THE BOILER

Important:
This condensing boiler contains components which could be damaged or blocked by grease, dirt, solder etc., from the water system. The following commissioning procedures must be followed precisely.

It is essential that combustion is checked at high and low rate , as per Section 5.7, using a calibrated flue gas analyser set for the relevant gas type.

4.1 INITIAL FLUSHING

All waterways within the Keston C90 and C110 are either copper, high alloy stainless steel or aluminium. As a result water treatment chemicals for central heating boilers such as Fernox MB1, Sentinel X100 or equivalent, are suitable. In any event reference must be made to BS 7593 : Treatment Of Water In Hot Water Central Heating Systems.

a. Disconnect the boiler from the system at the flow and return connections and temporarily link the flow and return pipes on the system.
b. Flush the entire system until clean water is discharged, free from dirt, flux, solder etc. The use of a flushing chemical is recommended, e.g. Fernox Supafloc, or equivalent. Sludge and scale must be removed from an existing system. Boiler failure due to system debris or sludge shall invalidate the guarantee.
c. Connect the system to the boiler and fill in accordance with Section 2.7 - Water Systems. At this stage, for sealed systems, fill to a pressure of about 2.7 bar.
d. Check the complete system for water soundness. If leaks need to be rectified using flux and solder, the system must be flushed cold again before proceeding.
e. Reduce the pressure to the Initial System Design Pressure for sealed systems, if applicable. Vent the system.

4.2 GAS SUPPLY

The complete gas installation up to the boiler service cock must be checked for soundness. BS 6891.

4.3 ELECTRICAL INSTALLATION

Carry out preliminary electrical safety checks, i.e. Earth continuity, Polarity, Resistance to Earth, Short Circuit using a suitable test meter.

4.4 INITIAL FIRING

Important
Checking the gas pressure to the pre-mix burner requires a special procedure, outlined below, which must be carried out.

a. Purge the gas supply in accordance with BS 6891.
b. Vent the water system.
Important:
The heat exchangers consist of crossflow tubes which can trap an air pocket. Great care must be taken to ensure that water flow has been established through the heat exchangers and thus ensuring no air pockets remain in the heat exchanger and pipe work. Firing the boiler while an air pocket exists in a heat exchanger could damage it.
c. Turn both the integral the gas service cocks to ON.
d. Turn on the electrical supply, setting the main zone (SL1) external controls to call for heat.
e. Adjust the upper rotary control knob, central heating temperature, to the maximum clockwise position.
Once a demand is received the left hand digit of each of the boiler module displays will change to “1” to indicate each burner has entered the 10 second pre-purge phase.

During this phase the module fan and pump will start to run. The digits will then change to “2” to indicate ignition is taking place whilst the gas valve are opened and the spark generated. Once the gas has ignited at the main burners the left hand digits will change to “3” to show the relevant burner is alight.

If an air lock or other blockage is present a module may go to overheat or water pressure lockout. This will be indicated by the first digit of the module display showing “9” and a flashing error code starting with “b”. If this occurs clear the blockage and/or purge the air from the system, and press the module “Reset” button to restart the ignition sequence. If ignition does not occur on a module, the module, at approximately 20 second intervals, will make four further attempts to light the burner.

If after five automatic attempts the module still fails to ignite, the display will show the code “E 02” indicating no ignition.

If, after five manual attempts (to allow for purging of any air in the gas line), the boiler still fails to ignite (indicated by the error code “E 02”) refer to Section 5.3 - Fault Modes.

f. If the DHW/Zone 2 feature is used this should also be tested. Set the DHW/Zone 2 control to call for heat and adjust the lower rotary control knob, DHW/Zone 2 temperature, to the maximum clockwise position. Rotate the upper rotary control knob to the maximum anticlockwise position.

Once the DHW/Zone 2 demand is received the integral diverter valve will divert module 1 flow output to the DHW flow connection. Once in position, the left hand digit of the left hand module will change to “1” to indicate the burner has entered the 10 second pre-purge phase. During this phase the left hand module fan and pump will start to run. The digits will then change to “2” to indicate ignition is taking place whilst the gas valve is opened and the spark generated. Once the gas has ignited the left hand digit will change to “4” to show the left hand module is alight and serving DHW/Zone 2 demand.

g. **Check for gas soundness between the each gas service cock and connection to the burner manifold.**

4.5 HOT FLUSHING

a. Allow the system to heat up, checking for water soundness.

b. Follow instructions provided with the cleaning agent, i.e. Fernox Supafloc, or equivalent. Turn off the boiler and flush the water system while still hot. Thoroughly flush the system with clear water.

c. Refill the system using a quality water treatment such as Fernox MB1 or Sentinel X100. For sealed systems, fill to the required Initial Design Pressure.

4.6 COMBUSTION TESTING - MANDATORY CHECK

Competence to carry out the check of combustion performance

PLEASE NOTE: BS 6798:2009 Specification for installation and maintenance of gas fired boilers of rated input not exceeding 70kW net advises that:

- The person carrying out a combustion measurement should have been assessed as competent in the use of a flue gas analyser and the interpretation of the results;
- The flue gas analyser used should be one meeting the requirements of BS7927 or BS-EN50379-3 and be calibrated in accordance with the analyser manufacturers’ requirements, and
- Competence can be demonstrated by satisfactory completion of the CPA1 ACS assessment which covers the use of electronic portable combustion gas analysers in accordance with BS 7967, Parts 1 to 4.

Although the gas pressure is preset at the factory it is required to assure proper combustion by measuring gas input and the level of carbon dioxide, or oxygen and carbon monoxide, in the flue outlet from the boiler. Over firing or under firing the burner will reduce the longevity of the appliance and may result in excessive carbon monoxide levels. Carbon dioxide and carbon monoxide are colourless, odourless gases produced by all combustion processes. When the Keston condensing boiler is operating properly, carbon dioxide (CO_2) levels will be between 8 & 8.2% (C90 low rate), 8.3 & 8.5% (C110 low rate), 8.2 & 8.7% (C90 high rate) and 8.6 & 9% (C110 high rate) and carbon oxide (CO) levels

will be between 5 to 20 ppm (low rate) and 50 to 150 ppm (high rate) for natural gas. In any event, the CO_2 level at low rate must ALWAYS be less than CO_2 levels at high rate. To measure CO_2 levels in the Keston boiler remove the 1/8" plug from the flue outlet pipe spigot (Figure 5.7.2 1/2 item 97). Insert the probe of a calibrated combustion analysis meter and sample the gases as instructed in the test equipment's instructions.
When firing the boiler for the first time since installation, the CO level at high rate may be between 100-220 ppm and between 50-80 ppm at low rate. This is due to compounds used during manufacture curing within the combustion chamber. On boilers which have been fired for more than one hour since installation, the CO levels should not exceed 150 ppm at high rate and 50 ppm at low rate. If CO levels above these values are experienced, the combustion chamber and flue system should be investigated.

The C110 & C90 are factory set for combustion and should need no adjustment. However, in the event adjustment is required.
Check combustion errors are not a result of incorrectly installed flue and/or air system, terminal location or damage or debris on the burner. If all these factors are found to be in order precede as follows:

1) Set any controls to call for heat.

2) Set the boiler to run at maximum / minimum fan speed. To do this is necessary to access the hidden buttons (behind the “KESTON” label under the display). There are five buttons, which are used to adjust settings and provide additional boiler information. The drawing below shows the layout of these buttons and their function.

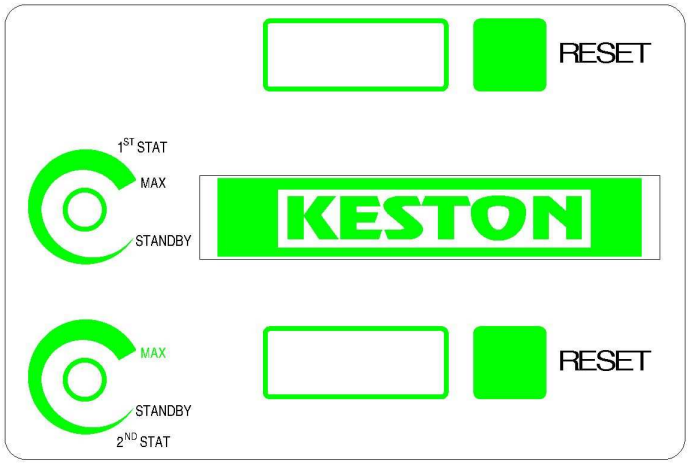

<u>To set the fan to maximum</u>
Press the “Mode” button repeatedly until the display shows “Stby”.
Press and hold the “Mode” and “+” key together for 2 seconds. The display will then show “H nn”. The unit is now locked on max fan speed.

3) Measure the CO_2 reading in the flue gases and adjust, if necessary, the adjustment screw (pos. 5) to produce a CO_2 reading of 8.2% to 8.7% for C90 and 8.6% to 9% for C110 with a corresponding CO level of 50 to 150 ppm for natural gas. NORMAL ADJUSTMENT, IF REQUIRED, SHOULD NEED NO MORE THAN HALF OF ONE ROTATION OF THE ADJUSTMENT SCREW (pos. 5). ADJUSTMENTS, IF MADE, SHOULD BE IN STEPS OF NO MORE THAN 1/8 OF A TURN. YOU MUST WAIT 1 MINUTE AFTER EACH ADJUSTMENT TO ALLOW THE SETTING TO STABILISE BEFORE TAKING A READING.

<u>To set the fan to minimum</u>
Press the “Mode” button repeatedly until the display shows “Stby”
Press and hold the “Mode” and “-“ keys together for 2 seconds. The display will then show “L nn”. The unit is now locked on min fan speed.

4) Measure the CO_2 reading in the flue gases. The CO_2 reading must be 8% to 8.2% for C90 and 8.3% to 8.5% for C110 with a corresponding CO level of 5 to 20 ppm for natural gas. THE CO2 LEVEL AT LOW RATE MUST ALWAYS BE LESS THAN THE CO2 LEVEL AT HIGH RATE. ADJUSTMENTS, IF MADE, SHOULD BE IN STEPS OF NO MORE THAN 1/8 OF A TURN. YOU MUST WAIT 1 MINUTE AFTER EACH

ADJUSTMENT TO ALLOW THE SETTING TO STABILISE BEFORE TAKING A READING.

If following the above procedure, combustion levels described above at both high and low rate could not be obtained, please turn off the appliance and isolate the gas to the appliance. Telephone KESTON BOILERS technical support (phone no. 0208 462 0262)

To revert to normal modulation
Press the "Mode" button repeatedly until the display shows "Stby"
Press and hold the "+" and "-" keys together for 2 seconds.

This process should be repeated for each module operating individually and together.

4.7 CHECKING THE GAS PRESSURE

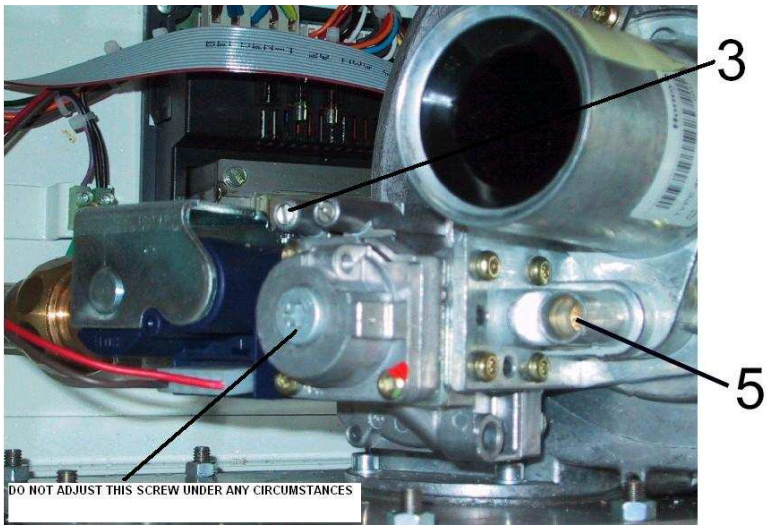

NB: It is advisable to carry out this test with the user control knob turned to maximum and the system water cold to ensure the boiler is running at maximum rate.
The gas setting is factory adjusted to within the required range and should not need adjustment. If the reading is incorrect then check such factors as soundness of the air and flue pipe joints and the gas inlet pressure (pos. 3) (minimum 18 mbar required for natural gas).

If all joints are sound and the gas inlet pressure is satisfactory check the gas input by timing the gas meter as detail in Section 4.8 Timing The Gas Meter. If the gas input cannot be measured then it's compulsory to measure the combustion quality as detail in Section 4.6 Combustion Testing.

4.8 TIMING THE GAS METER

After the boiler has been started, and with no other appliances using gas, time the gas meter to be certain that the unit is running at the proper gas input. Determine the cubic feet of gas passing through the meter and determine the input in Btu per hour. Input must be within plus or minus 5% of the rated input.
Time, in seconds, the time taken to pass 2 cubic feet of gas through the meter (i.e. one revolution of a 2 cu ft dial) or 0.1 cubic metres if the meter is of the new metric digital type.

Model	Time for 2 cu ft	Time for 0.1 cu m
C90 (natural gas)	24 seconds	42 seconds
C110 (natural gas)	19 seconds	34 seconds

If the meter timing is found to be incorrect when both the boiler modules are firing at maximum rate contact Keston Boilers Ltd for further guidance

4.9 HANDING OVER TO THE USER

It is important to fully explain the following:

a. Procedure to light and turn off the boiler, including isolation of the electrical supply if necessary.

b. The function of the lockout feature must be explained :
If the display shows “E 02” this means that that module has failed to light. Press the “Reset” button and wait.
i) If lockout recurs immediately then the gas supply should be checked as ON, otherwise consult a Service Engineer.
ii) If it is not possible to relight, the boiler must be isolated and a Service Engineer called in to rectify the fault.

c. Advise that a reduction in the water pressure reading on the system pressure gauge, for sealed systems, indicates a leak which should be rectified before further use.

d. Advise that the appliance should be serviced by a competent person at least once a year.

e. Advise on the frost protection and pump/fan exercise feature.

f. Hand over User Instructions.

g. Advise the user that a plume of water vapour (steam) from the flue terminal is normal and that there is no need for concern.

5. FAULT FINDING

5.1 ELECTRICAL CONTROL SEQUENCE

The C90 and C110 feature digital displays to detail the operating status of each of the two modules contained in the boiler. When serving a demand signal on SL1 only both displays will show very similar temperatures (the last two digits) and matching status, allowing for a small delay between operation of each module.
In the event a demand signal is received on SL2 (i.e. DHW demand) the left hand module is "seconded" away from serving the main zone flow and will operate independently of the right hand module to serve the DHW demand at the temperature specified using the lower rotary knob. The output of the left hand module is diverted to the DHW Flow output connection by an integral diverter valve. Once the demand signal on SL2 is removed, the left hand module re-joins the right hand module to resume serving the demand from the main zone
In this way the boiler is able to produce two different flow temperatures at the same time.

When the external controls are calling for heat, power will be fed to the boiler connection strip at terminals SL1 (Switched Live 1) &/or SL2 (Switched Live 2) and N (Neutral). If the user control setting on the relevant knob is to a temperature less than the boiler flow temperature the relevant module display will show "6 nn" where nn is the actual boiler flow temperature. If the user control setting of the relevant knob is to a temperature above the actual boiler flow temperature and provided all temperature thermostats and pressure switches are closed the module control PCB will initiate the following sequence for the relevant module.

(1) The fan will start.
(2) When the fan reaches running speed, the control PCB will start the ignition sequence and the first digit of the display will show "1".
(3) After a pre-purge period of about 10 seconds, the first digit of the display will show "2", the gas valve will open to allow gas to mix with the air at the suction side of the fan and the ignition spark will occur at the main burner.
(4) When the burner ignites, the flame is detected by the control PCB through the combined flame sensor/ignitor and the ignition spark is stopped. The first digit of the display will show "3" or "4" depending on the external demand being served. The module is now in its normal run condition.
(5) The module will automatically and continuously adjust its power output and pump speed to best match the demands of the system at any time.
(6) The burner will continue to operate until the gas valve interrupts the gas supply. The gas valve will be closed by the control PCB if power is interrupted to the boiler by any external control or the boiler thermostat. If an interruption to the gas supply causes loss of the flame, the control box will pause for approximately 10 seconds and then attempt to re-ignite the unit. If this attempt fails, i.e. due to continued lack of gas supply, the boiler will make four further attempts to ignite at intervals of approximately 10 seconds and will then go to a lockout state (the display shows "E 02"). Once the gas supply has been resumed the boiler can be reset by pressing the "Reset" button.
(7) The boiler can also be shut down by the cabinet temperature sensor or flue overheat thermostat.

Any failure of the boiler to sequence in the above manner should be investigated using the following trouble shooting flow diagram.

Before attempting any electrical fault finding, always carry out preliminary electrical system checks. On completion of any service/fault finding task which has required the breaking and remaking of electrical connections, the checks, earth continuity, polarity, short circuit, resistance to earth must be repeated.

QUICK REFERENCE

5.2 NORMAL OPERATION

The C90 and C110 boilers feature a user display which shows actual flow temperature of each module at all times (the last two digits of the display) and a status number (the first digit) which identifies what the module is doing at any given time. The table below shows the range of status codes which will be displayed as part of normal module operation:

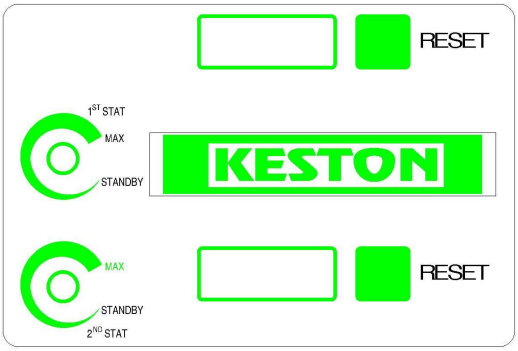

NORMAL OPERATION CODES

Display	Meaning
0 nn	Boiler in standby waiting for demand signal
1 nn	Boiler is running fan prior to attempting ignition
2 nn	Boiler has opened gas valve and is sparking at ignitor
3 nn	Boiler is alight and running in response to a demand from central heating (i.e. SL1)
4 nn	Boiler is alight and running in response to a demand from DHW (i.e. SL2)
5 nn	Temporary mode whilst boiler is adjusting internal settings
6 nn	Burner is off because the boiler is up to temperature
7 nn	Boiler pump is in Central Heating overrun mode (2 mins)
8 nn	Boiler pump is in DHW overrun mode (2 mins)
A nn	Temporary mode whilst boiler is adjusting internal settings

5.3 FAULT MODES

5.3.1 Automatic Lockout Avoidance

The module will react to adverse conditions in two ways. If the fault is not severe, or is not persistent, the module will halt (or block) operation for a set time before it attempts to fire again. During this block time the block code will be displayed, alternately with the code “9 nn”, where nn is the module flow temperature.

BLOCK CODES

Display	Reason for block
B 18	Flow temperature exceed 95°C
B 19	Return temperature exceeded 95°C
B 24	Return temperature exceeded flow temperature. Check pump direction on boiler and any external pumps. Check wires on flow and return thermistors are not crossed.
B 25	Flow temperature climbing too quickly. Possible air lock or circulation blockage
B 26	Low water pressure
B 28	No signal from fan. Possible fan disconnected or faulty.
B 29	Incorrect signal from fan. Possible fan faulty.
B 30	Difference between flow and return temperatures too high. Check water circulation
B 65	Waiting for fan to start

5.3.2 LOCKOUT

If the fault is persistent or more severe the module will lockout with a error code. When the module has entered this error mode it will not attempt to restart until the “Reset” button is pressed.

ERROR CODES

Display	Description of fault
E 00	Flame detected when not expected. Check boiler earth and probe condition.
E 02	No ignition after restart. Check gas supply, gas valve operation and ignitor electrode spark generation.
E 03	Gas valve faulty or not connected
E 04	Power has been reset whilst boiler was in lockout
E 11	Internal electronics error - rest or replace control box
E 12	Thermal fuse blown or flue overheat thermostat activated.
E 18	Flow overheat - check water circulation
E 19	Maximum return temperature exceeded. Check circulation.
E 25	Flow temperature increased too quickly. Check water circulation.
E 28	Fan not rotating - check fan connection and fan for fault.
E 30	Difference between flow and return temperatures too high. Check circulation.
E 31	Flow thermistor short circuit - check/replace connections/thermistor
E 32	Return thermistor short circuit - check/replace connections/thermistor
E 36	Flow thermistor open circuit - check/replace connections/thermistor
E 37	Return thermistor open circuit - check/replace connections/thermistor
E 44	Low water pressure

5.4 FUNCTIONAL FLOW WIRING DIAGRAM

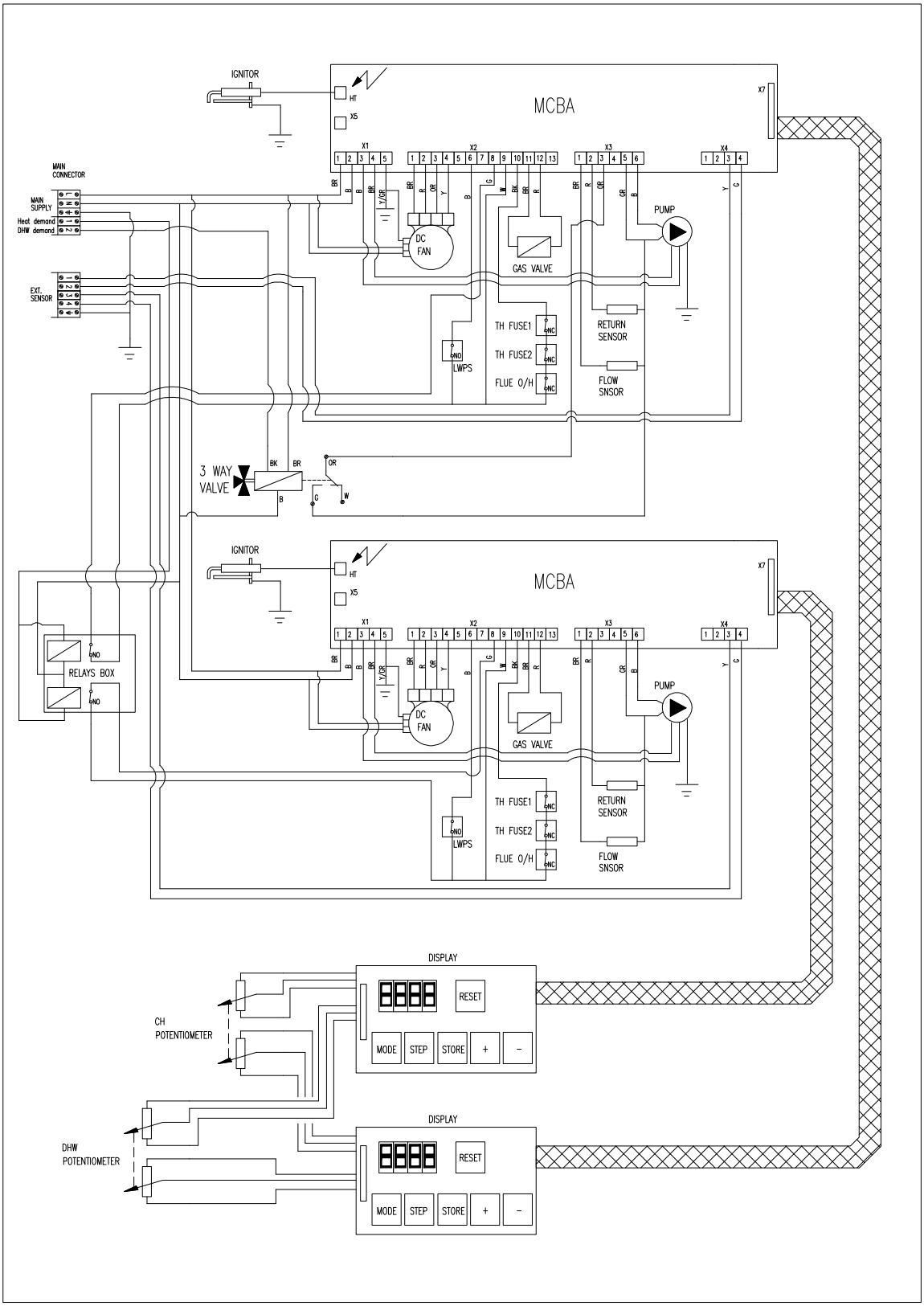

5.5 ELECTRICAL WIRING DIAGRAM

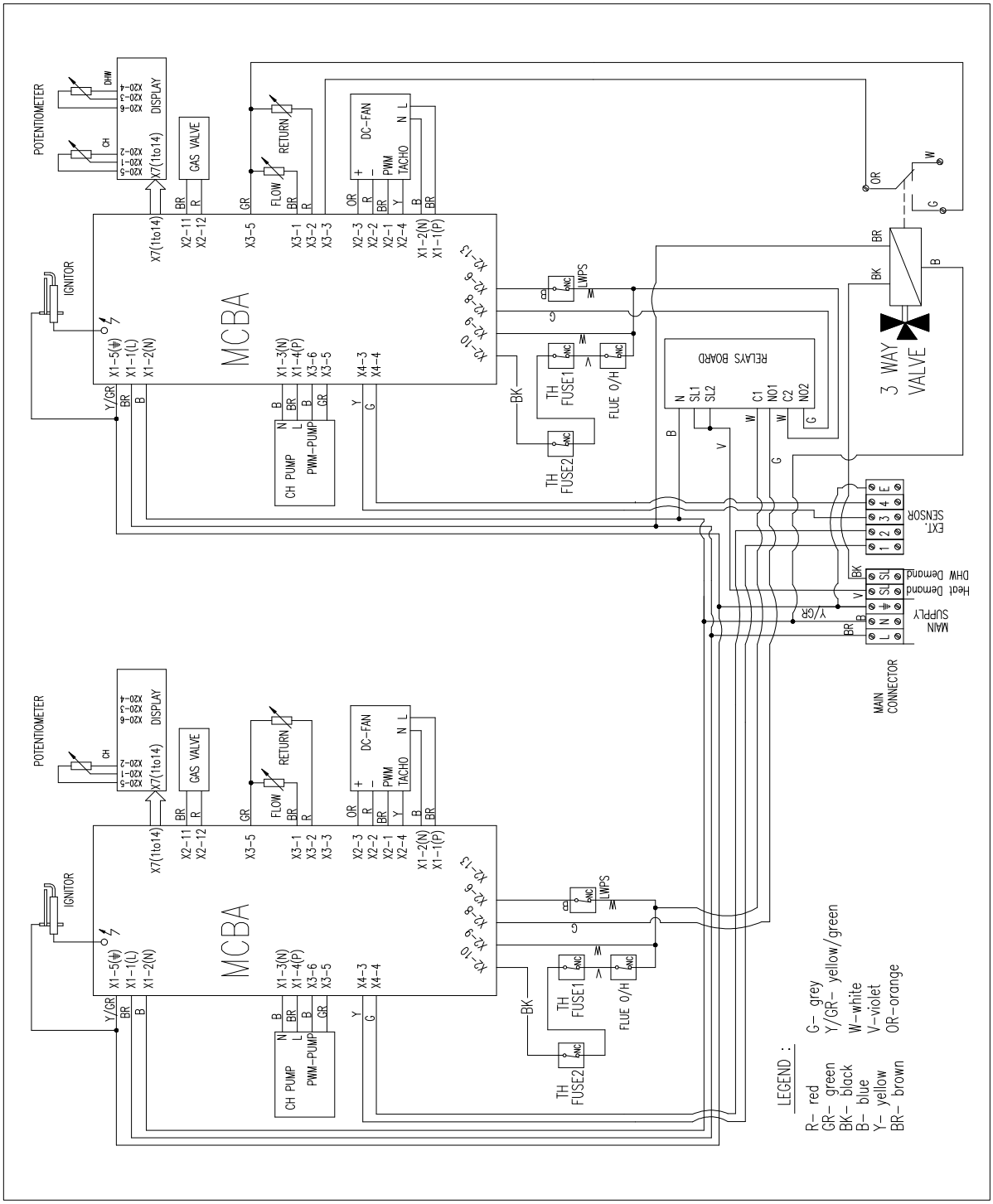

5.6 ILLUSTRATED WIRING DIAGRAM

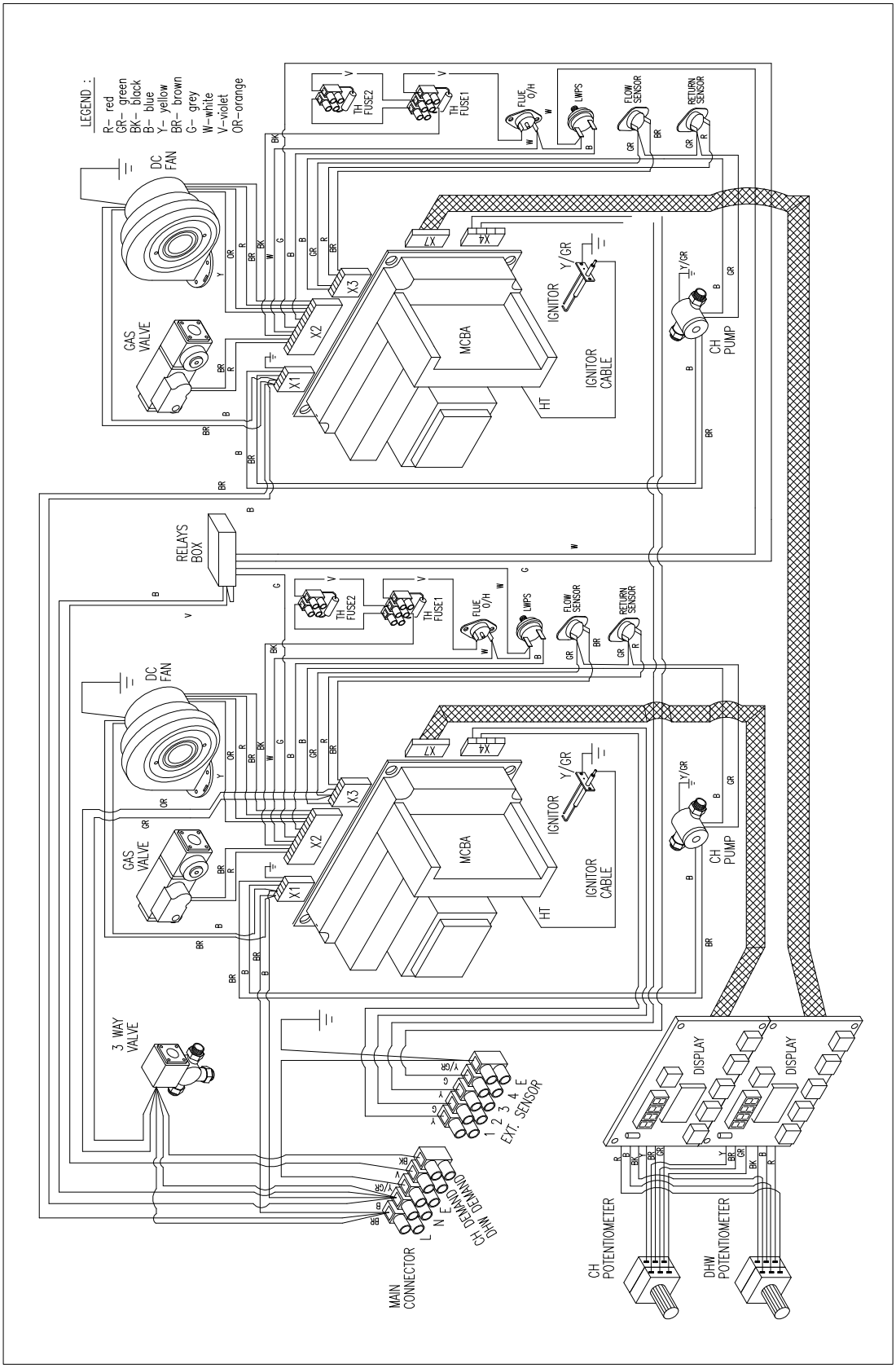

5.7 Exploded Assembly Diagrams

5.7.1 Boiler Controls Assembly

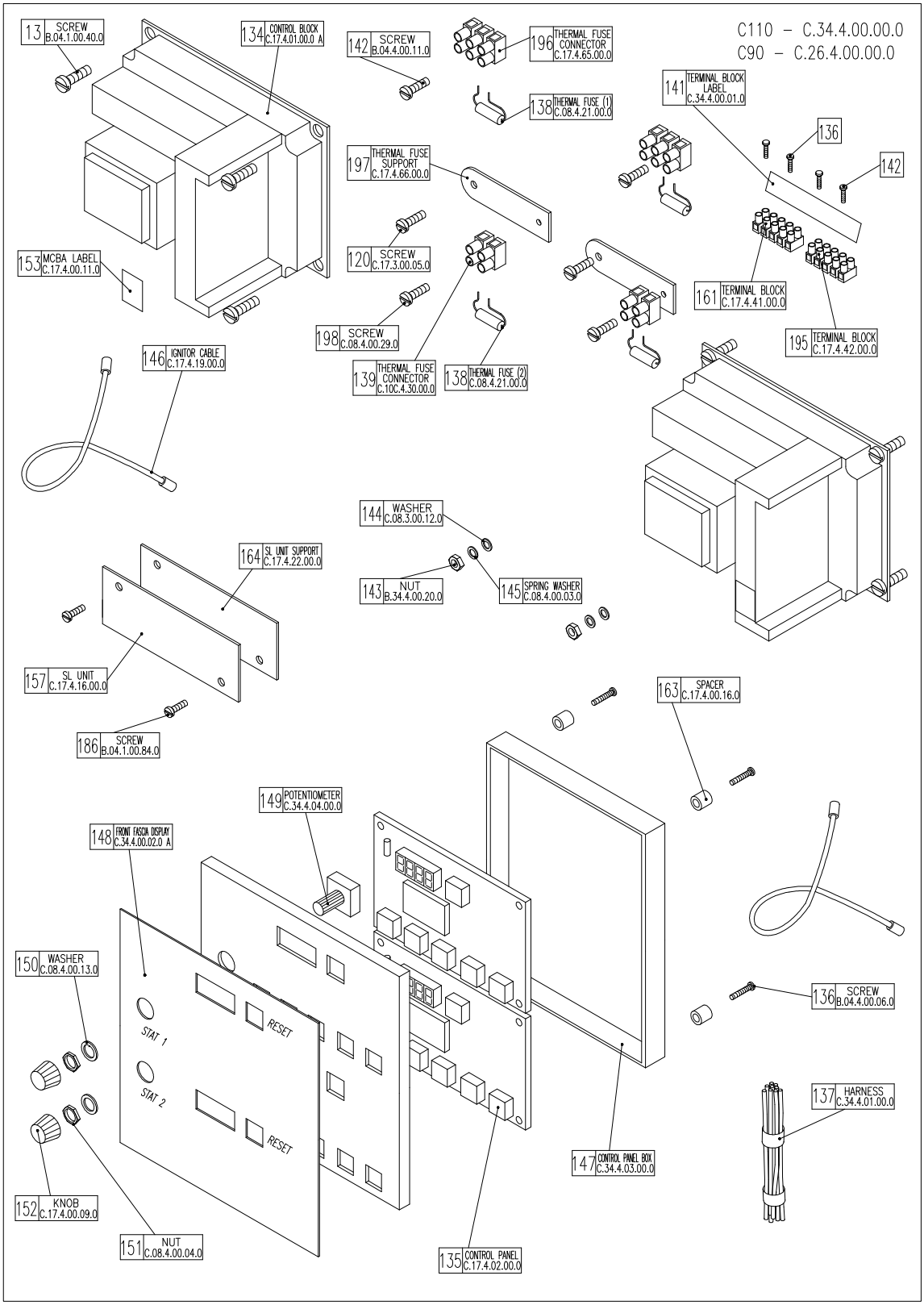

5.7.2 Waterway, Condensate & Flue Assembly.

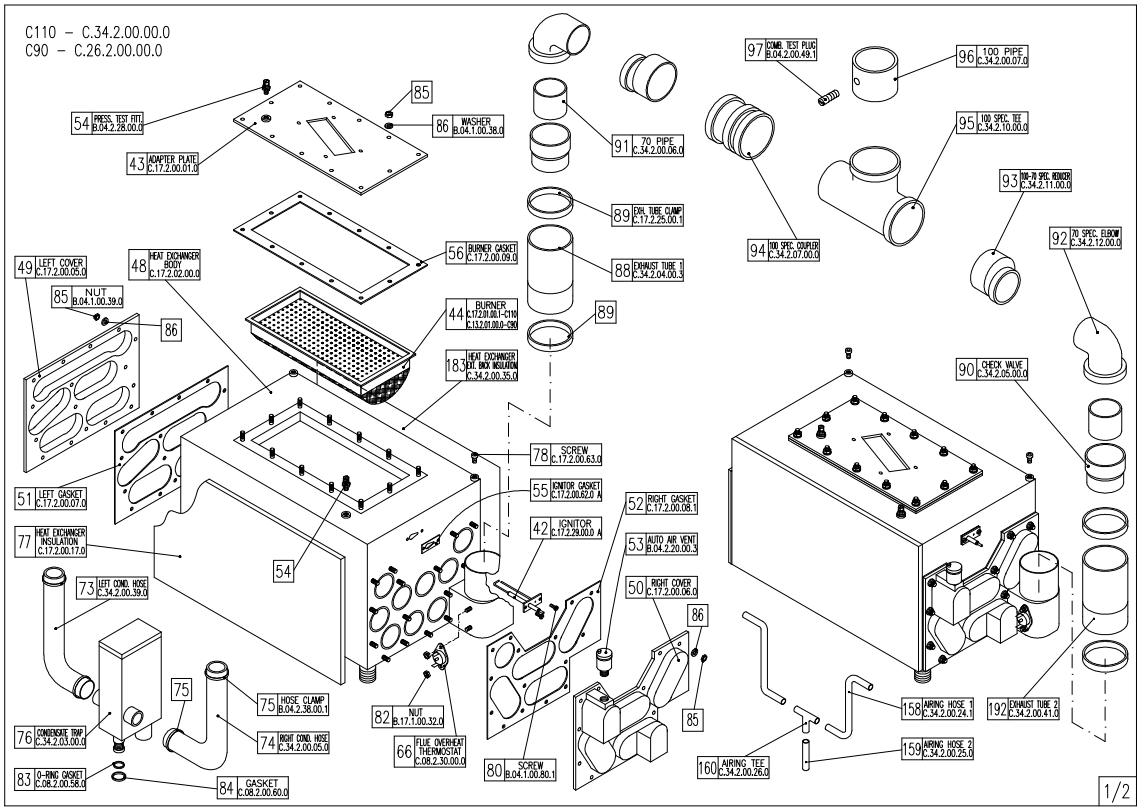
C110 – C.34.2.00.00.0
C90 – C.26.2.00.00.0
54 PRESS. TEST FITT. B.04.2.28.00.0
43 ADAPTER PLATE C.17.2.00.01.0
85
86 WASHER B.04.1.00.38.0
91 70 PIPE C.34.2.00.06.0
97 COMB. TEST PLUG B.04.2.00.49.1
96 100 PIPE C.34.2.00.07.0
95 100 SPEC. TEE C.34.2.10.00.0
93 100-70 SPEC. REDUCER C.34.2.11.00.0
92 70 SPEC. ELBOW C.34.2.12.00.0
89 EXH. TUBE CLAMP C.17.2.25.00.1
88 EXHAUST TUBE 1 C.34.2.04.00.3
94 100 SPEC. COUPLER C.34.2.07.00.0
56 BURNER GASKET C.17.2.00.09.0
49 LEFT COVER C.17.2.00.05.0
48 HEAT EXCHANGER BODY C.17.2.02.00.0
85 NUT B.04.1.00.39.0
86
44 BURNER C.17.2.01.00.1-C110 C.13.2.01.00.0-C90
183 HEAT EXCHANGER EXT. INOX INSULATION C.34.2.00.35.0
90 CHECK VALVE C.34.2.05.00.0
78 SCREW C.17.2.00.63.0
51 LEFT GASKET C.17.2.00.07.0
55 IGNITOR GASKET C.17.2.00.62.0 A
52 RIGHT GASKET C.17.2.00.08.1
42 IGNITOR C.17.2.29.00.0 A
53 AUTO AIR VENT B.04.2.20.00.3
77 HEAT EXCHANGER INSULATION C.17.2.00.17.0
54
73 LEFT COND. HOSE C.34.2.00.39.0
50 RIGHT COVER C.17.2.00.06.0
86
75
75 HOSE CLAMP B.04.2.38.00.1
82 NUT B.17.1.00.32.0
66 FLUE OVERHEAT THERMOSTAT C.08.2.30.00.0
80 SCREW B.04.1.00.80.1
85
158 AIRING HOSE 1 C.34.2.00.24.1
192 EXHAUST TUBE 2 C.34.2.00.41.0
76 CONDENSATE TRAP C.34.2.03.00.0
74 RIGHT COND. HOSE C.34.2.00.05.0
159 AIRING HOSE 2 C.34.2.00.25.0
160 AIRING TEE C.34.2.00.26.0
83 O-RING GASKET C.08.2.00.58.0
84 GASKET C.08.2.00.60.0
1/2

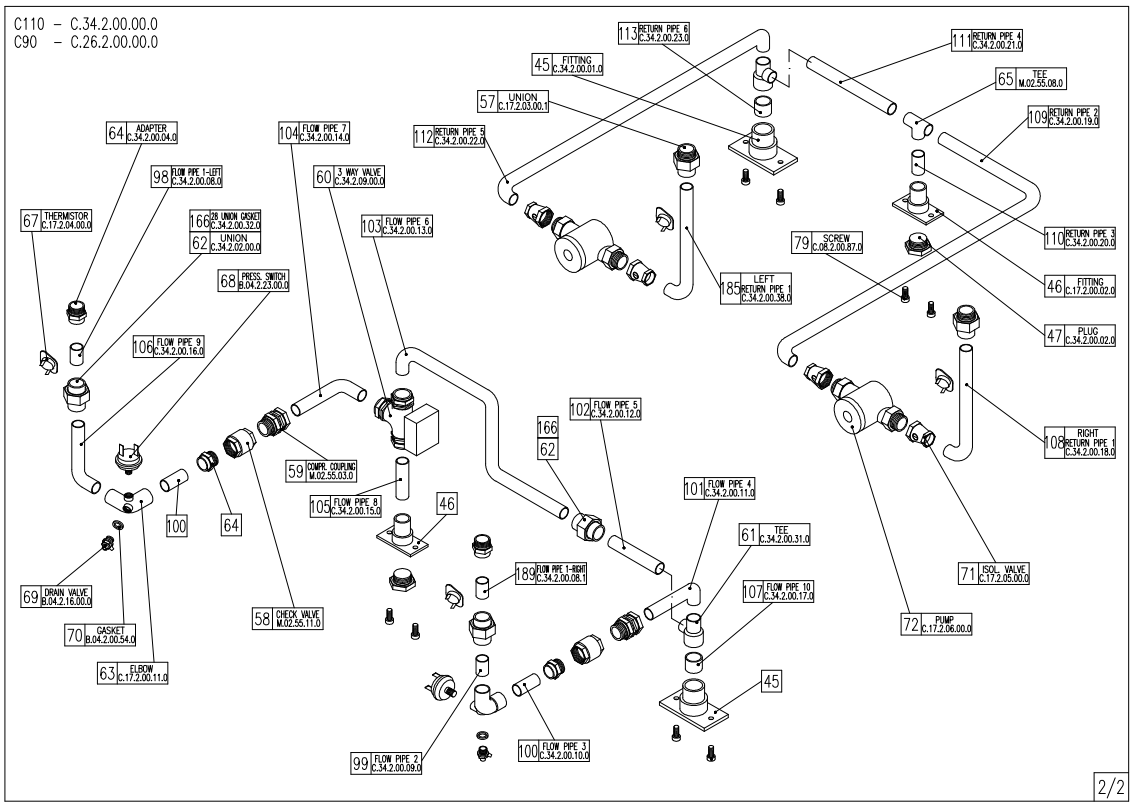
C110 – C.34.2.00.00.0
C90 – C.26.2.00.00.0
113 RETURN PIPE 6 C.34.2.00.23.0
11 RETURN PIPE 4 C.34.2.00.21.0
45 FITTING C.34.2.00.01.0
65 TEE M.02.55.08.0
57 UNION C.17.2.03.00.1
109 RETURN PIPE 2 C.34.2.00.19.0
64 ADAPTER C.34.2.00.04.0
104 FLOW PIPE 7 C.34.2.00.14.0
112 RETURN PIPE 5 C.34.2.00.22.0
98 FLOW PIPE 1-LEFT C.34.2.00.08.0
60 3 WAY VALVE C.34.2.09.00.0
67 THERMISTOR C.17.2.04.00.0
166 2/8 UNION GASKET C.34.2.00.32.0
62 UNION C.34.2.02.00.0
103 FLOW PIPE 6 C.34.2.00.13.0
79 SCREW C.08.2.00.87.0
110 RETURN PIPE 3 C.34.2.00.20.0
68 PRESS. SWITCH B.04.2.23.00.0
185 LEFT RETURN PIPE 1 C.34.2.00.38.0
46 FITTING C.17.2.00.02.0
47 PLUG C.34.2.00.02.0
106 FLOW PIPE 9 C.34.2.00.16.0
102 FLOW PIPE 5 C.34.2.00.12.0
166
62
108 RIGHT RETURN PIPE 1 C.34.2.00.18.0
59 COMPR. COUPLING M.02.55.03.0
101 FLOW PIPE 4 C.34.2.00.11.0
105 FLOW PIPE 8 C.34.2.00.15.0
46
100
64
61 TEE C.34.2.00.31.0
71 ISOL. VALVE C.17.2.05.00.0
189 FLOW PIPE 1-RIGHT C.34.2.00.08.1
69 DRAIN VALVE B.04.2.16.00.0
107 FLOW PIPE 10 C.34.2.00.17.0
58 CHECK VALVE M.02.55.11.0
72 PUMP C.17.2.06.00.0
70 GASKET B.04.2.00.54.0
63 ELBOW C.17.2.00.11.0
45
99 FLOW PIPE 2 C.34.2.00.09.0
100 FLOW PIPE 3 C.34.2.00.10.0
2/2

5.7.3 Air - Gas Assembly

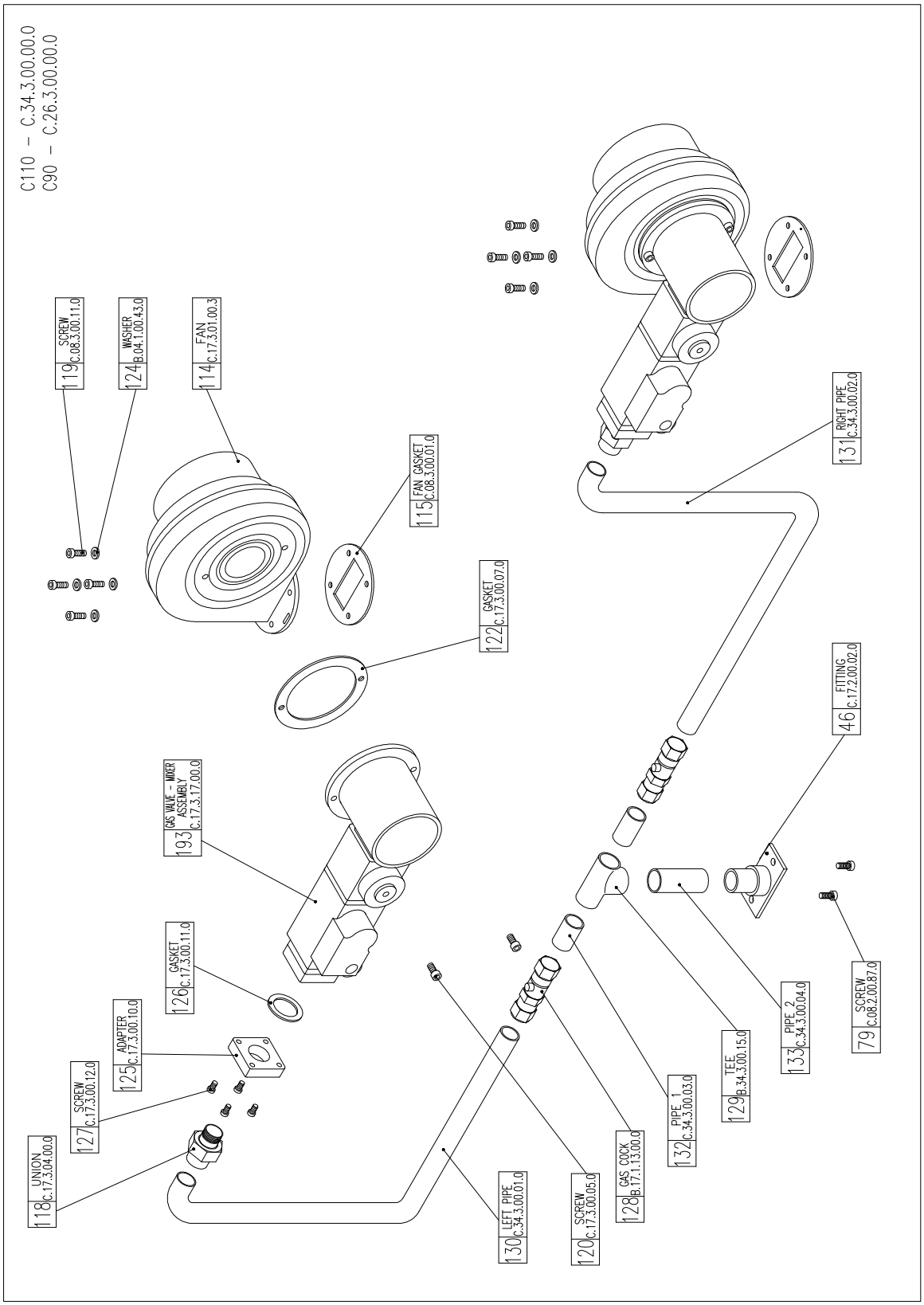

5.7.4 Casing Assembly

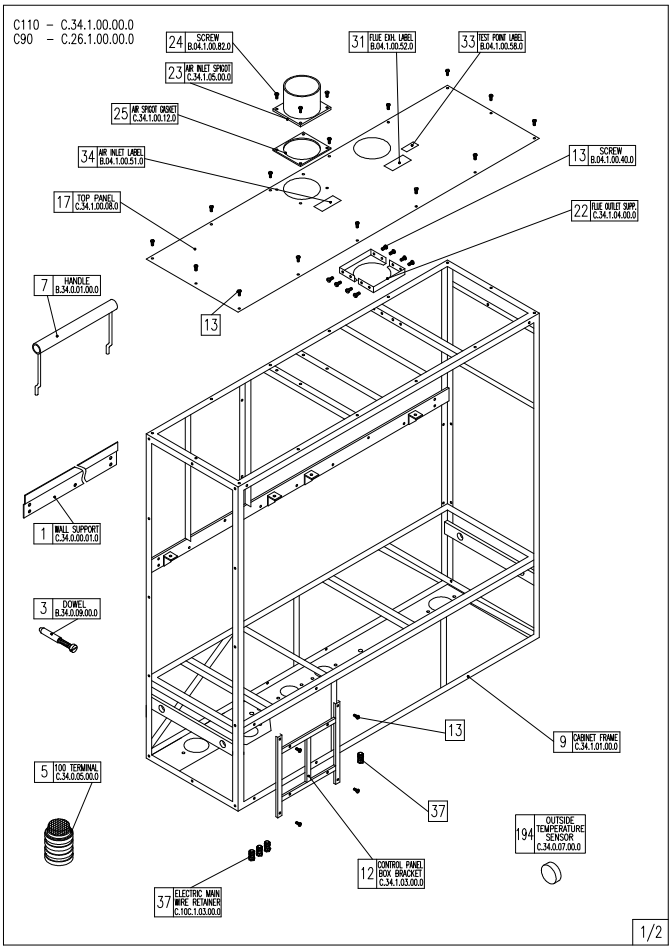

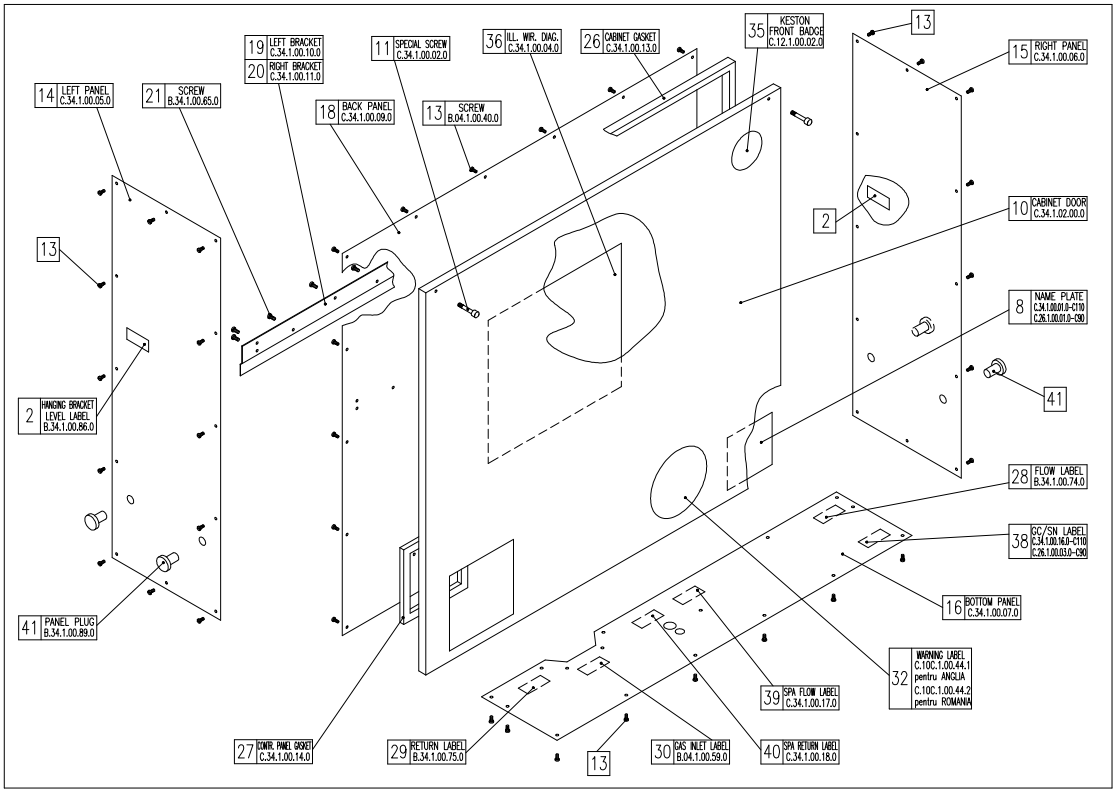

5.7.5 Exploded Diagrams Parts Reference List

Boiler Controls Assembly (Fig. 5.7.1)

GC Number	Code	Description
E93-126	134	Main Control Box (C.17.4.01.00.0 A)
E93-130	147	Control Panel (C.17.4.02.00.0)
-	161	HV Terminal Block (C.17.4.41.00.0)
	195	LV Terminal Block (C.17.4.42.00.0)
E72-401	138	Thermal Fuse (C.08.4.21.00.0)
E93-135	146	Ignitor Cable (C.17.4.07.00.0)

Waterway, Condensate & Flue Assembly (Fig. 5.7.2)

GC Number	Code	Description
E93-136	48	Heat Exchanger (C.17.2.02.00.0)
E93-137	44	C110 Burner (C.17.2.01.00.1)
E93-138	44	C90 Burner (C.13.2.01.00.0)
E93-141	56	Burner Head Gasket (C.17.2.00.09.0)
E93-142	55	Ignitor Gasket (C.17.2.00.62.0 A)
E93-143	42	Spark Ignition Electrode (C.17.2.29.00.0 A)
-	76	Condensate Trap (C.34.2.03.00.0)
E93-145	67	Flow/Return Thermistor (C.17.2.04.00.0)
E72-332	66	Flue Overheat Stat (C.08.2.30.00.0)
114-045	68	Water Pressure Switch (B.04.2.23.00.0)
E93-146	72	Water Pump (C.17.2.06.00.0)
E73-355	97	Combustion Test Plug (B.04.2.00.49.1)

Air - Gas Assembly (Fig. 5.7.3)

GC Number	Code	Description
E93-147	114	Combustion Blower (C.17.3.01.00.3)
	193	Gas Valve - Mixer Air-Gas Assembly (C.17.3.17.00.0)

Casing Assembly (Fig. 5.7.4)

GC Number	Code	Description
-	10	Cabinet Door (C.34.1.02.00.0)
-	8	C110 Databadge (C.34.1.00.01.0)
-	8	C90 Databadge (C.26.1.00.01.0)

6. ROUTINE (ANNUAL) SERVICING

To ensure the continued safe and efficient operation of the boiler it is necessary to carry out routine servicing at regular intervals. The frequency of the servicing will depend upon the particular operating conditions, but it is recommended that an annual service should be carried out by a qualified engineer.

It is the law that any service work must be carried out by competent qualified persons.

NB: When servicing ensure that the gas and electrical supplies to the boiler are isolated before any work starts. It should be noted that setting the user controls to “Standby” does not isolate the electrical supply and parts of the boiler will remain live.

Hazardous materials are not used in the construction of the C90 and C110. However, due care should be taken when handling boiler components.
All joints should be checked for soundness after servicing and before firing the appliance.

PLEASE NOTE: During routine servicing, and after any maintenance or change of part of the combustion circuit, the following must be checked:

- **The integrity of the flue systems and flue joints, as described in Section 3.4**
- **The integrity of the boiler combustion circuit and the relevant seals**
- **The operational (working) gas inlet pressure at maximum rate, as described in Section 4.7**
- **The gas rate, as described in Section 4.8**
- **The combustion performance, as described in Section 4.6**

6.1 Pre-Service Checks

It is recommended that an inspection should be carried out prior to shutting down the unit for servicing. Remove the front door by removing the screws retaining the top and lifting the front panel clear of the bottom. The following items should be observed:

a. Smooth starting and running of each module blower.
b. Smooth lighting of each burner.
c. Check for leakage of gas, gas/air or combustion products.
d. Check for condensate leaks.
e. Check that the modules do not enter “blocks” in operation whilst running (indicated by the display alternating between “9 nn” and “B nn”, where nn indicated either the flow temperature or the block code). If so refer to section 5.2 and section 5.3 for details of code meanings and rectify.
f. Check for water soundness.
g. Inspect the flue vent and air intake pipework. Joints must be sound and all pipework well bracketed.
h. Check that there is a steady fall back to the boiler from the flue pipe to allow condensate to run back into the boiler.
i. With the boiler operating at a low return temperature (i.e. less than 50°C) check that the condensate flows freely from the condensate line.

6.2 Recommended Routine Module Service

a. Remove the outer case by first removing the securing screws at the front of the appliance.
b. Remove the burner head (Section 7.6) and inspect the burner appearance (both heat exchangers). Black markings or other discoloration's on the gauze indicate too much gas or a lack of air possibly due to a blocked air inlet. Any breakage's or damage to the burner mesh indicate the burner must be replaced.

c. If necessary clean the burner with a mild household detergent and rinse under a hot running tap.

d. If necessary, from visual inspection, clean the heat exchanger using a suitable stiff plastic bristle brush, vacuum out any large particles and flush the heat exchanger with fresh water until the water flowing from the condensate drain is clear.

e. Remove the condensate trap (Section 7.8) and clean by flushing through with clean running water.

f. Check the electrode assembly mounted on the heat exchanger. If the point is damaged or burnt replace it.
Check that the spark gap measures 3 mm.

g. Replace the burner head, renewing the gasket if necessary, and reconnect the gas/air supply. Ensure the flanged gas/air supply joint is air tight.

h. Turn on the electrical supply to the boiler and allow the boiler to reach operating temperature levels.

i. Remove the combustion test point plug from the flue pipe. This is situated on the flue spigot out of the cabinet.

j. **Carry the full procedure detailed in section 4.6 COMBUSTION TESTING - MANDATORY**

k. Replace the combustion test point plug.

l. Recheck the burner pressure by following the procedure detailed in Section 4.7.

m. Check all joints for soundness up to the gas burner.

n. Repeat the procedure for the other module

7. REPLACEMENT OF PARTS

CONTENTS

7.0 GENERAL
7.1 PRECAUTIONS
7.2 ACCESS
7.3 REPLACEMENT PROCEDURE
7.4 ELECTRICAL COMPONENTS
7.4.1 CONTROL PANEL
7.4.2 MODULE FLOW & RETURN THERMISTORS
7.4.3 CABINET TEMPERATURE SENSOR
7.4.4 FLUE PROTECTION THERMOSTAT
7.4.5 WATER PRESSURE SWITCH
7.4.6 MAIN CONTROL BOX
7.4.7 COMBUSTION BLOWER
7.4.8 GAS CONTROL VALVE / VENTURI ASSEMBLY
7.5 SPARK IGNITION/FLAME DETECTION ELECTRODE
7.6 BURNER
7.7 HEAT EXCHANGER
7.8 CONDENSATE TRAP
7.9 PUMP

7.0 GENERAL

The following must always be carried out by a competent/qualified person.

7.1 PRECAUTIONS

i) Always switch off the mains electricity supply and disconnect the plug at the isolating switch and socket. (If a switch only is used then remove the fuse.)

ii) Gain access to the appliance (Section 7.2) and turn off the gas supply at the appliance service cock.

WARNING : Parts of the boiler internal wiring will remain live even after setting the User Controls to Standby. Shut off the power supply at the isolating switch before working on the appliance.

7.2 ACCESS

i) Remove the cabinet door by removing the screws from the front of the cabinet.

7.3 REPLACEMENT PROCEDURE

i) Always replace in the reverse order unless otherwise stated.

ii) Electrical connections must be remade in accordance with the Electrical Wiring Diagram (Section 5.5).

iii) Test the soundness of any gas carrying or water carrying joint broken during the service procedures.

7.4 ELECTRICAL COMPONENTS

7.4.1 Control Panel (Fig. 5.7.1 item 135)

i) Isolate the appliance (Section 7.1)

ii) Gain access (Section 7.2)

iii) Remove the user control cover by removing the four retaining screws (Fig 5.7.1, item 136).

iv) Disconnect the Control Panel by unplugging the ribbon cable connection block.

v) Disconnect the potentiometers (Fig 5.7.1, item 149) by unplugging the cable connection.

vi) Reassemble (Section 7.3)

vii) Check for correct operation of the Control Panel.

7.4.2 Module Flow and Return Thermistors (Fig. 5.7.2 item 67)

i) Isolate the appliance (Section 7.1)
ii) Gain access (Section 7.2)
iii) Remove the push on connectors from the thermistor taking note of the correct positions.
iv) Unclip the thermistor from the pipe.
v) Reassemble (Section 7.3)
NB: When fitting the new thermistor it is an advantage to smear a thin film of heat sink compound between the thermistor and pipe. This, combined with fitting the new thermistor tightly to the pipe, ensures a good contact.

7.4.3 Cabinet Temperature Sensor (Fig 5.7.1 item 138)

i) Isolate the appliance (Section 7.1)
ii) Gain access (Section 7.2)
iii) Remove the cabinet temperature sensor from the connector block by slackening the retaining screws.
iv) Reassemble (Section 7.3)

7.4.4 Flue Protection Thermostat (Fig. 5.7.2 item 66)

i) Isolate the appliance (Section 7.1)
ii) Gain access (Section 7.2)
iii) Remove the push on connectors from the thermostat taking note of the correct positions.
iv) Unscrew the two retaining screws, or nuts, and remove the thermostat.
v) Reassemble (Section 7.3)
NB: When fitting the new thermostat it is an advantage to smear a thin film of heat sink compound between the thermostat and plate. This, combined with fitting the new thermostat tightly to the plate, ensures a good contact.

7.4.5 Water Pressure Switch (Fig. 5.7.2 item 68)

i) Isolate the appliance (Section 7.1)
ii) Shut off the water supply to the appliance.
iii) Gain access (Section 7.2)
iv) Drain the system to below the level of the appliance using the drain off tap at the base of the return pipe from the heat exchanger.
v) Remove the push on connectors from the water pressure switch taking note of the correct positions.
vi) Unscrew the pressure switch.
vii) Reassemble (Section 7.3).
NB: Use a little jointing compound or PTFE tape on the thread.
viii) Refill the system (See Section 4 - Commissioning).

7.4.6 Main Control Box (Fig. 5.7.1 item 134)

i) Isolate the appliance (Section 7.1)
ii) Gain access (Section 7.2)
iii) Pull off the multi-pin connectors and HT lead away from the board.
iv) Remove the three retaining screws securing the control block to the boiler backframe.
v) Remove the control box.
vi) Reassemble (Section 7.3)

7.4.7 Combustion Blower (Fig. 5.7.3 item 114)

i) Isolate the appliance (Section 7.1)
ii) Gain access (Section 7.2)
iii) Disconnect the two connector blocks from the combustion blower.
iv) Unscrew the bolts securing the venturi (fig 5.7.3 item 120) to the inlet port of the combustion blower.
v) Remove the four bolts securing the combustion blower (fig. 5.7.3 item 119) outlet flange to the burner and remove the combustion blower.
vi) Reassemble (Section 7.3)
NB: When reassembling inspect any gaskets for damage and replace if necessary.

7.4.8 Gas Control Valve / Venturi Assembly (Fig. 5.7.3 item 193)

i) Isolate the appliance (Section 7.1)
ii) Gain access (Section 7.2)
iii) Remove the push on connector block to the gas valve.
iv) Unscrew the bolts (Fig 5.7.3 item 127) securing the gas inlet pipe to the gas control valve / venturi assembly.
v) Unscrew the bolts securing the gas control valve / venturi assembly (Fig 5.7.3 item 120) to the inlet port of the combustion blower.
vi) Remove the gas valve/venturi assembly as a complete unit.
vii) Reassemble (Section 7.3)
viii) Check the gas rate and combustion (See Section 4 - Commissioning)

NB: Always change the gas valve/venturi assembly together. This assembly is factory preset but must be checked using the procedure set out in Section 4.6 (Combustion testing).

7.5 SPARK IGNITION/FLAME DETECTION ELECTRODE (Fig. 5.7.2 item 42)

i) Isolate the appliance (Section 7.1)
ii) Gain access (Section 7.2)
iii) Remove the pull off HT lead to the spark ignition electrode.
iv) Undo the screws to the spark ignition electrode flange located on the heat exchanger side panel and withdraw the spark ignition electrode.
v) Reassemble (Section 7.3)

NB: When reassembling inspect the gasket for damage and replace if necessary.
With the new spark ignition electrode in place it is essential to ensure the gap between the tip of the electrode and the earth post is 3 mm. Distances above or below 3 mm will affect ignition performance. If necessary gently bend the electrode taking care not to damage the ceramic insulator.

7.6 BURNER (Fig. 5.7.2 items 44)

i) Isolate the appliance (Section 7.1)
ii) Gain access (Section 7.2)
iii) Remove the combustion blower (Section 7.4.7)
iv) Remove the 12 nuts fixing the burner to the top of the heat exchanger.
v) Withdraw the burner from the top of the heat exchanger.
vi) Reassemble (Section 7.3)

NB: When reassembling inspect any gaskets for damage and replace if necessary.

7.7 HEAT EXCHANGER (Fig. 5.7.2 item 48)

i) Isolate the appliance (Section 7.1)
ii) Gain access (Section 7.2)
iii) Shut of the water supply to the appliance.
iv) Remove the burner (Section 7.6)
v) Drain the system to below the level of the appliance using the drain off tap at the base of the boiler return pipe.
vi) Remove the flue protection thermostat (Section 7.4.4)
vii) Remove the spark ignition/flame detection electrode (Section 7.5)
viii) Remove the flue connection by slackening the retaining strap and pulling the flue off the heat exchanger spigot.
ix) Remove the condensate trap hose (Fig 5.7.2 item 73 or 74) by releasing the retaining clamp and pulling the hose away from the spigot at the base of the heat exchanger flue outlet box.
x) Disconnect the flow pipe union (Fig.5.7.2 item 62) and the return pipe union (Fig.5.7.2 item 57) from the heat exchanger.
xi) Remove the two screws fixing the heat exchanger to the top mounting bracket (Fig 5.7.2 item 78)

xii) Remove the heat exchanger
xiii) Reassemble (Section 7.3)
xiv) Recommission (Section 4 - Commissioning)

7.8 CONDENSATE TRAP (Fig. 5.7.2 item 76)

i) Isolate the appliance (Section 7.1)
ii) Gain access (Section 7.2)
iii) Disconnect the condensate line from the base of the heat exchanger.
iv) Disconnect the condense line from the projection of the condensate trap from the base of the cabinet.
v) Withdraw the condensate trap.
vi) Mop up any spilled condensate.
vii) Reassemble (Section 7.3)

NB: When re-fitting the condensate trap pour water onto the condensate hose from the base of the heat exchanger until nearly full. Then reconnect the condensate hose to the base of the heat exchanger.

7.9 PUMP (Fig 5.7.2 item 72)

i) Isolate the appliance (Section 7.1)
ii) Gain Access (section 7.2)
iii) Isolate the waterways to the pump using the pump isolation valves(Fig 5.7.2 item 71)
iv) Disconnect the pump electrical cable from the connections box of the pump head taking note of the correct position.
v) Remove the four allen bolts securing the pump head to the pump back plate.
vi) Remove the pump head.
vii) Reassemble (Section 7.3)

8. SHORT SPARE PARTS LIST

Item	GC No	Part Denomination	Item	GC No	Part Denomination
44	E93-137 E93-138	C110 Burner C90 Burner		56	E93-141 Burner Gasket

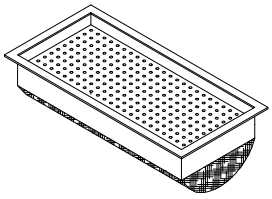

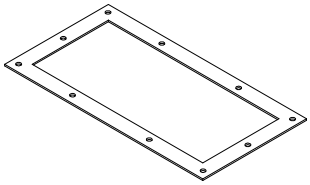

55	E93-142	Ignitor Gasket	42	E93-143	Ignitor/Sensor Probe

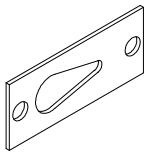

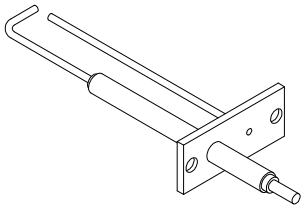

67	E93-145	Flow/Return Thermistors	66	E72-332	Flue Thermostat

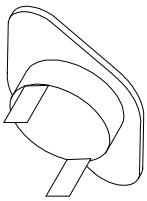

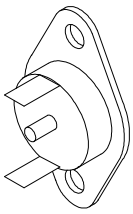

193	Gas Valve / Venturi Assembly		134	E93-126	Main Control Box

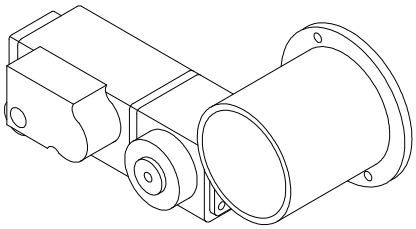

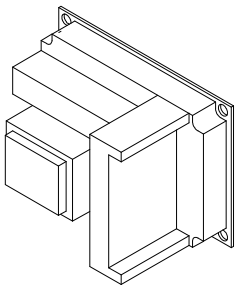

SHORT SPARE PARTS LIST FOR THE KESTON CONDENSING BOILER RANGE

Item	GC No	Part Denomination
67	E93-145	Flow/Return Temperature Thermistor
68	114-045	Water Pressure Switch
66	E72-332	Flue Protection Thermostat
134	E93-126	Main Control Box
135	E93-130	Control Panel
114	E93-147	Combustion Blower
193		Gas Valve / Venturi Assembly
76	E93-144	Condensate Trap
42	E93-143	Ignition Electrode
44	E93-137	Burner (C110)
44	E93-138	Burner (C90))
48	E93-136	Heat Exchanger
72	E93-146	Circulating Pump
138	E72-401	Cabinet Temperature Sensor

KESTON CONDENSING BOILERS
IMPORTANT
C90 & C110
INSTALLATION KEY POINTS

- ☑ *Read Installation Manual Carefully*
- ☑ *Ensure that there is at least 9 feet head of water pressure at the top of the boiler .*
- ☑ *Ensure that ALL dust particles, filings , plastic chips etc. are removed from the inlet pipe.*
- ☑ *If the installation is a replacement the system must be flushed clean. System should be drained hot, then refilled, then drained again until the water is clean.*
- ☑ *Ensure that there is a proper electrical supply i.e. 230V fused at 5A for the permanent live.*
- ☑ *Take great care with pipe connections to ensure that no damage is done to the internal pipework.*
- ☑ *Ensure that the 22mm condensate pipe is not exposed to freezing conditions.*
- ☑ *Make sure that the exhaust pipe terminates away from windows or vents and is out of reach.*
- ☑ *Make sure that the air inlet and exhaust pipe outlets are at least 500mm apart.*
- ☑ *Check tightness of all connections in the boiler before firing.*
- ☑ *Ensure that the terminals supplied are fitted to both the exhaust and air inlet pipes.*
- ☑ *The system must be free from air before firing.*
- ☑ *Complete the combustion testing (Section 4.7) using a calibrated flue gas analyser.*