KESTON

Celsius 25

Fan Powered High Efficiency Modulating Domestic Condensing Gas Boiler

Installation And Servicing Instructions

Celsius 25 & 25P Models

CE/PI No : 87BL49

GC No : 41-930-06

These instructions must be left either with the user or next to the site gas meter.

KESTON Boilers

34 West Common Road
Hayes, Bromley, Kent BR2 7BX
Tel. +44 (0)20 8462 0262 Fax. +44 (0)20 8462 4459
email : info@keston.co.uk web : www.keston.co.uk

Qualified for Energy Technology List www.eca.gov.uk TM

Authorised User No. 00144

benchmark™

CONTENTS

Section	Description
1	GENERAL INSTRUCTION
1.1	Description
1.2	Boiler Schematic
1.3	Related Documents
1.4	Performance Data
1.5	Optional Accessories
2	BOILER LOCATION
2.1	Dimensions & Minimum Clearances
2.2	Service Connections
2.3	Position
2.4	Electrical
2.5	Boiler Size Selection
2.6	Gas Supply
2.7	Water Systems
2.8	Flue System
2.9	Air Supply
2.10	Compartment Installation
2.11	Condensate Drainage
3	INSTALLATION OF THE BOILER
3.1	Wall Mounting Bracket
3.2	Mounting The Boiler
3.3	Assembly Practice
3.4	Installing Flue And Air Pipes
3.5	Condensate Drainage
3.6	Water System
3.7	Gas Supply
3.8	Electrical Supply
3.9	Exchanging A Boiler
4	COMMISSIONING OF THE BOILER
4.1	Initial Flushing
4.2	Gas Supply
4.3	Electrical Installation
4.4	LPG Gas
4.5	Initial Firing
4.6	Hot Flushing
4.7	Checking The Gas Pressure

4.8 Timing The Gas Meter
4.9 Combustion Testing
4.10 Handing Over To The User

5 FAULT FINDING
5.1 Electrical Control Sequence
5.2 Fault Finding Flow Chart - General
5.3 Fault Finding Flow Chart - Detailed
5.4 Functional Flow Wiring Diagram
5.5 Electrical Wiring Diagram
5.6 Illustrated Wiring Diagram
5.7 Exploded Assembly Diagrams

6 SERVICING
6.1 Pre Service Checks
6.2 Recommended Routine Service

7 REPLACEMENT OF PARTS
7.0 General
7.1 Precautions
7.2 Access
7.3 Replacement Procedure
7.4 Electrical Components
7.5 Spark Ignition/Flame Detection Electrode
7.6 Burner
7.7 Heat Exchanger
7.8 Condensate Trap
7.9 Pump

8 SPARE PARTS LISTINGS

9 GAS BOILER COMMISSIONING CHECKLIST

10 HIGH & LOW COMBUSTION SETTING PROCEDURE

1. GENERAL INSTRUCTION

1.1 DESCRIPTION

The Celsius 25 is unique in its concept and design. It comprises a high efficiency stainless steel heat exchanger coupled with a low emissions burner to deliver ultra high efficiency condensing mode operation within a compact wall hung cabinet. The unit automatically adjusts gas and air rate according to demand to give an output in the range of 7.0kW to 25.2kW (natural gas model). The integral standard UPS Grundfos pump is automatically controlled across the three speeds to best match water flow rate to heat output & further increase appliance efficiency. While the application for which the Celsius 25 was designed is the same as those which other boilers are used, the Keston Celsius 25 has the added advantage of very high efficiency, and small diameter plastic flue which can be extended up to 60 metres horizontally or vertically.

The Keston Celsius 25 uses a variable speed combustion blower to deliver a premix of gas and air to a downward firing burner in a high efficiency, single pass heat exchanger. The flue system is room sealed and fan powered. The ignition is direct spark and fully automatic. The boiler housing is **not** waterproof and should be installed in a position where it will always be dry. Combustion air is drawn from the cabinet which is connected to outside atmosphere via a small diameter plastic intake pipe. The cabinet therefore remains under negative pressure at all times the boiler is operating.

The boiler is suitable for connection to open vented or, preferably, sealed systems.

The boiler heat exchanger is made from highly corrosion resistant stainless steel in corrugated pipe form which provides massive surface area within a compact dimension. The hot combustion gases from the down firing burner pass around the stainless steel pipes imparting heat into the system water. The integral standard 3 speed Grundfos pump within the appliance cabinet ensures the heat exchanger receives correct water flow when firing. The Celsius 25 is not a high water content boiler and does not contain the metal mass, or water volume, of a cast iron or steel boiler. This boiler is of low mass and low water content and therefore responds faster when there Is a call for heat. The Celsius 25 features full user diagnostics, integral frost protection thermostat, automatic pump and fan exercise in periods of inactivity, anti cycle control, dry fire protection and connections for remote lockout and run monitoring.

1.2 BOILER SCHEMATIC

Air is drawn into the boiler through a 50 mm muPVC (BS5255 and/or BSEN1566-1 and BSEN1329) plastic pipe or, alternatively, via a 75mm composite plastic pipe.. Gas is mixed with combustion air at the inlet to the fan. The gas flow is automatically regulated by the gas valve according to the air flow generated by the fan. The gas and air are thoroughly mixed in the blower and fed into the burner located at the top end of the heat exchanger module. The gas and air mixture is ignited by a direct spark ignition control system and burns with a blue flame just off the surface of the burner. As the hot products of combustion pass downwards, they are cooled by exchanging heat with the circulating water which enters the heat exchanger at the bottom of the heat exchanger. The optimum heat input is detected by monitoring flow and return temperatures and is adjusted by controlling the speed of the fan. The optimum pump speed is also detected and automatically selected by the boiler.

When the return water temperature is below 55°C, part of the water vapour in the combustion products will condense inside the heat exchanger, thus increasing the boiler efficiency further by releasing the latent heat of condensation. This condensate falls to the bottom of the heat exchanger where it is separated from the flue gases and exits from the boiler through the condensate drain. Any condensate formed in the flue runs back down the flueway and is drained at the base of the flue connection to the heat exchanger or drain points within the flue.

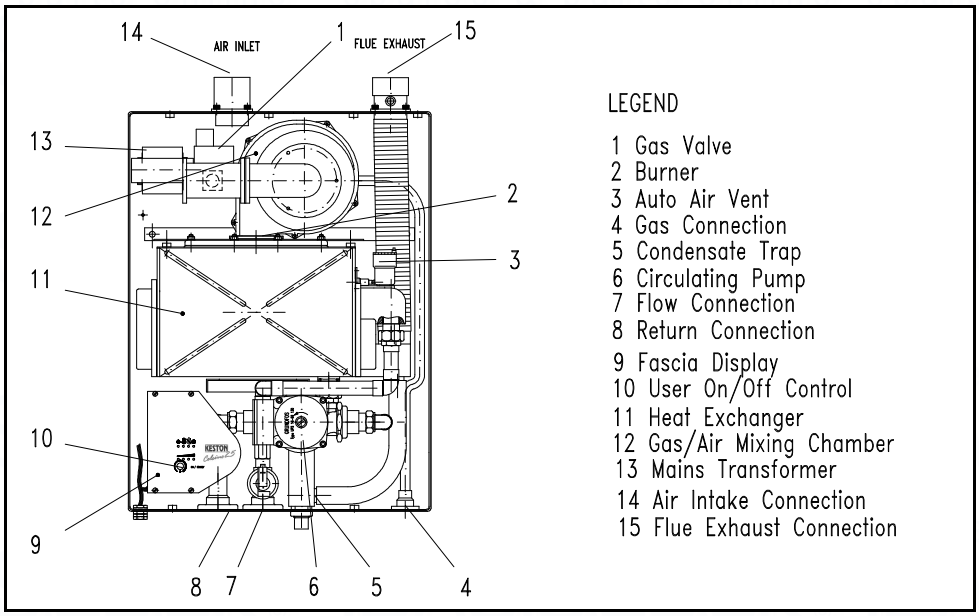

Fig. 1.2 - Boiler Layout

The condensate is very slightly acidic (about the same acidity as vinegar) and should be piped in a plastic pipe. It is not harmful to the waste disposal system and may be disposed of as normal waste water.

The flue gases are piped in a 50 mm muPVC (BS5255 and/or BSEN1566-1 and BSEN1329) plastic pipe or, alternatively, 75mm composite plastic to the outside. The temperature of the flue gases are usually around 5°C above the temperature of the return water. The flue pipe should be terminated outside the building from where they cannot re-enter the building or any other adjacent building.

The heating level may be controlled by room thermostats, hot water calorifier thermostats, programmer time clocks and energy management systems.

The Celsius 25 features an integral frost protection function which will fire the boiler, regardless of the external controls, should the boiler temperature fall below 4°C. The boiler will continue to fire until the boiler flow temperature exceeds 15°C. This is to avoid damage to the boiler through freezing of boiler water.

The Celsius 25 features an integral pump/fan exercise function which will run the fan and pump, without firing the boiler, for 5 seconds in the event the boiler is on standby for in excess of 24 hours without firing. This is to help prevent seizing of fan and/or pump due to long periods of inactivity.

1.3 RELATED DOCUMENTS

The Keston Celsius 25 Condensing Boiler must be installed in accordance with the current issue of the *Gas Safety (Installation and Use) Regulations 1996*, current *IEE Wiring Regulations*, *Building Regulations*, *Building Standards (Scotland) Consolidation*, and the *Bye Laws of the local Water Undertaking*.

In addition, due account must be taken to the following Codes Of Practice:

BS 6891	:	*Gas Supplies*
BS 6798	:	*Installation Central Heating Boilers*
BS 5449	:	*Installation Pumped Central Heating*
BS 5546	:	*Installation Domestic Hot Water*
BS 5440.1	:	*Flues*
BS 5440.2	:	*Air Supply*
BS 7074.1	:	*Expansion Vessels*

BS 7593 : Treatment of Water in Hot Water Central Heating Systems

For Timber Framed Buildings, British Gas Publications DM2. Also *British Gas Publications 'Guidance Notes For The Installation Of Domestic Gas Condensing Boilers'* and *'Specification For Domestic Wet Central Heating Systems'.*

1.4 PERFORMANCE DATA

		Celsius 25 Nat. Gas (G20)	**Celsius 25P LPG (G31)**
Max. Input (Gross CV)	kW/(Btu/h)	26.1/(89,000)	25.0/(85,300)
Max. Output To Water			
(80/60C Flow/Return)	kW/(Btu/h)	23.1/(78,800)	22.7/(77,500)
(50/30C Flow/Return)	kW/(Btu/h)	25.2(86,000)	24.8(84,600)
Min. Output To Water			
(80/60 C Flow/Return)	kW/(Btu/h)	7.0(23,900)	6.8(23,300)
(50/30C Flow/Return)	kW/(Btu/h)	7.7(26,200)	7.45(25,400)
Max. Burner Press.-Hot *(Factory Preset)*	mbar/(in w.g)	-3.15(-1.26)	-4.60(-1.84)
Gas Consumption After 10 mins	l/s / (Ft^3/hr)	0.68(85.7)	0.313(39.5)
Max. Operating Flow Temp.	°C	82.00	82.00
Max. Head (Open Systems)	m / (ft)	30.50 / (100)	30.50 / (100)
Max. Press. (Sealed System)	Bar	2.70	2.70
Min. Head (Open Systems)	m	3.0	3.0
Inlet Gas Pressure	mbar/(in w.g)	20.0 / (8.0)	37.0(14.8)
Recommended Temp Diffl	°C	8 to 20	8 to 20
Electrical Supply		230V 50Hz	230V 50Hz
Power Consumption (Max)	W	160	160
Cabinet Height	mm	621	621
Cabinet Width	mm	471	471
Cabinet Depth	mm	249	249
Top Clearance	mm	150	150
Side Clearance	mm	1	1
Base Clearance	mm	100	100
Front Clearance (for servicing)	mm	305	305
Weight - Full	kg / (lbs)	43/(95)	43/(95)
Weight - Empty	kg / (lbs)	38/(84)	38/(84)
Flow and Return Connection		Rp 0.75" F	Rp 0.75" F
Gas Connection		Rp 0.5" F	Rp 0.5" F
Condensate Connection	mm	22mm plastic overflow	
Flue and Air Intake Material	50mm muPVC (BS5255 and/or BSEN1566-1 and BSEN1329)		
Flue Pipe Size (nominal bore)	mm / (in)	50 / (2)	
Air Intake Pipe Size (nominal bore)	mm / (in)	50 / (2)	
Max. Air Intake Length	m	39	
Max. Flue Outlet Length	m	20	
Max. Total Flue Outlet and Air Intake Length (m)		40	
Flue and Air Intake Material		75mm Keston Composite	
Flue Pipe Size (nominal bore)	mm / (in)	75 / (3)	
Air Intake Pipe Size (nominal bore)	mm / (in)	75 / (3)	
Max. Air Intake Length	m	117	
Max. Flue Outlet Length	m	60	
Max. Total Flue Outlet and Air Intake Length (m)		120	
Type of Gas		G20 Natural Gas	G31 LPG
Optimum Flue Gas CO_2 Level	%	8.4	10.0
Destination Countries		GB/IE	GB/IE
SEDBUK Efficiency*		90.4%	93.3%

***) Seasonal Efficiency (SEDBUK) = 90.4% (Celsius 25) and 93.3% (Celsius 25P)**
This value is used in the UK Government's Standard Assessment Procedure (SAP) for energy rating of dwellings. The test data from which it has been calculated have been certified by Advantica Technologies Ltd
Keston Boilers Ltd declare that there are no substances harmful to health within the appliance or used during the production of the appliance.
The Celsius 25 is intended for domestic and commercial EMC environments and on a governed G20 meter supply.
The Celsius 25P is intended for domestic and commercial EMC environments and on a governed G31 supply.

IMPORTANT
This product contains ceramic fibre boards, which although not regarded as a risk, contain ceramic fibre which may cause temporary irritation to eyes, skin and respiratory tract. The fibres are held in place by inorganic binders. Therefore as long as the boards are not disturbed they will not be released. Since the boards are non-servicable parts there should be no risk.
To ensure that the release of fibres from these RCF articles is kept to a minimum, during installation and servicing we recommend that you use a HEPA filtered vacuum to remove any dust accumulated in and around the appliance before and after working on the appliance. When replacing these articles we recommend that the replaced items are not broken up, but are sealed within heavy duty polythene bags, and clearly labelled as RCF waste. RCF waste is classed as a stable, non-reactive hazardous waste and may be disposed at a landfill licensed to accept such waste. Protective clothing is not required when handling these articles, but we recommend you follow the normal hygiene rules of not smoking, eating or drinking in the work area and always wash your hands before eating or drinking.

BENCHMARK INITIATIVE
As part of the industry wide "Benchmark" initiative KC25 boiler manual includes **Gas Boiler Commissioning Checklist (Chapter 9)**. This form should be completed by your installer at the end of the installation and commissioning process. The details of the Checklist will be required in the event of any warranty work being required. There is also **Service Interval Record (Chapter 9)** to be completed after each annual service visit.
These forms (Chapter 9) should be kept in a safe place for the life of the boiler.
CORGI INFORMATION
The boiler should be installed and serviced only by CORGI registered operatives. All CORGI registered Installers carry a CORGI ID card and have a registration number. **Both should be recorded in your boiler manual (Chapter 9: GAS BOILER COMMISSIONING CHECKLIST).** You can check your installer by calling CORGI direct on 01256 372300.

1.5 OPTIONAL ACCESSORIES

A range of accessories are available from Keston Boilers Ltd to compliment an installation. Terminal wall dealing collars are available to make good the external all face whilst working from the inside of the building using 50mm muPVC (BS5255 and/or BSEN1566-1 and BSEN1329) pipe or 75mm (actual dimensions are int.dia. = 68mm, ext.dia. = 78mm) Keston Composite pipe. Stand-off frames are available to leave a 50mm gap behind the boiler to allow routing of pipes behind the boiler. A sealed system kit is available to mount below the boiler as an extension to the cabinet and convert the boiler to a "system" boiler incorporating 8 litre expansion vessel and 3 bar safety valve.

Description	Part Number
Flue Terminal Wall Sealing Collar	C.08.0.00.07.0
Air Terminal Wall Sealing Collar	C.08.0.00.07.0
50/75 Flue Adapter	C.17.2.00.60.0
Flue Outlet Terminal (75mm)	C.17.2.26.00.0
Air Inlet Terminal (75mm)	C.17.2.26.00.0
Sealed System Kit	C.08.0.02.00.0
Stand Off Back Plate (Boiler only)	C.08.0.03.00.0
Stand Off Back Plate (Boiler + Sealed System Kit)	C.08.0.05.00.0

2. BOILER LOCATION

All dimensions in mm.

2.1 DIMENSIONS AND MINIMUM CLEARANCES

The boiler must be installed in minimum clearances shown to allow subsequent servicing, and safe operation. However, larger clearances may be required during installation.

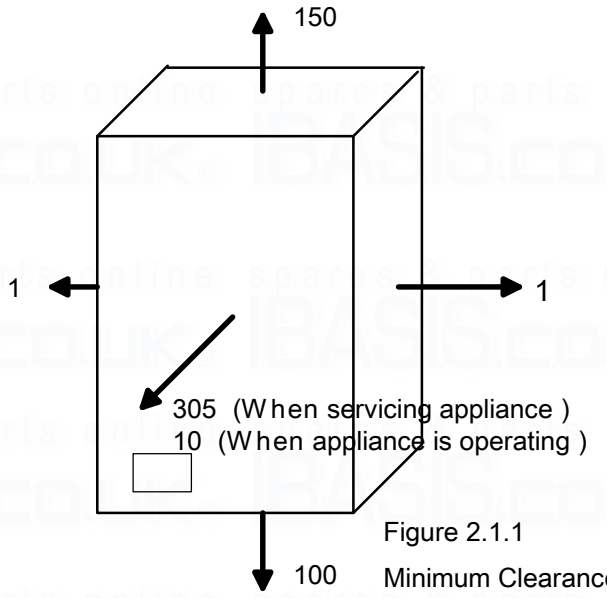

Figure 2.1.1
Minimum Clearances

2.2 SERVICE CONNECTIONS

Gas, water, air and flue pipe, condensation, and electrical connections are as shown. Gas : 0.5 inch BSP female. Flow/Return 0.75 inch BSP female.

An optional stand-off frame is also available which mounts behind the boiler to leave a 50mm deep space behind the boiler. This is to permit pipe routing behind the boiler if required. See Section 1.5 - Optional Accessories.

Figure 2.1.2
Dimensions

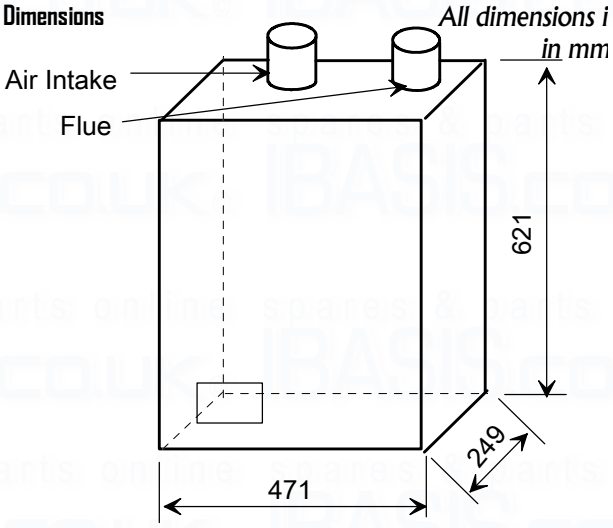

2.3 POSITION

The Celsius 25 is not suitable for external installation. The boiler may be installed in any room or internal space, although particular attention is drawn to the requirements of the current IEE Wiring Regulations and, in Scotland, the electrical provisions of the Building Regulations applicable in

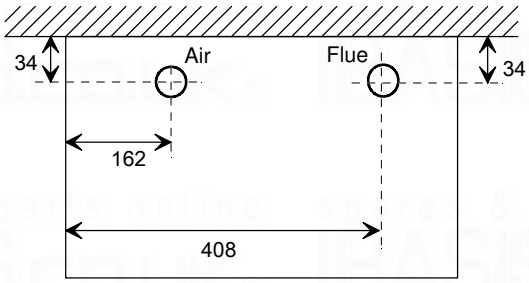

Top View

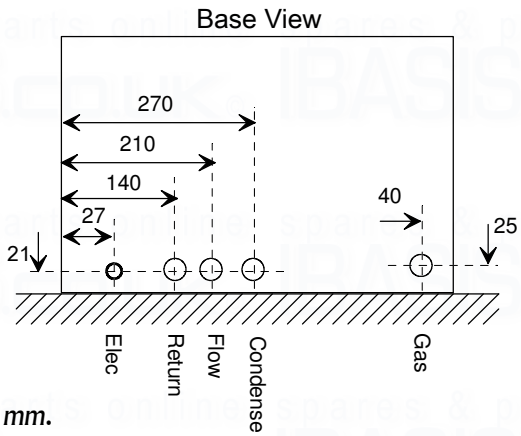

Service Connection Locations *All dimensions are in mm.*

Scotland, with respect to the installation of the boiler in a room or internal space containing a bath or shower.
Where a room-sealed appliance is installed in a room containing a bath or shower, any electrical switch or appliance control, utilising mains electricity, should be so situated that it cannot be touched by a person using the bath or shower.
Compartment installation is permitted - such compartments must be constructed in accordance with BS 6798.

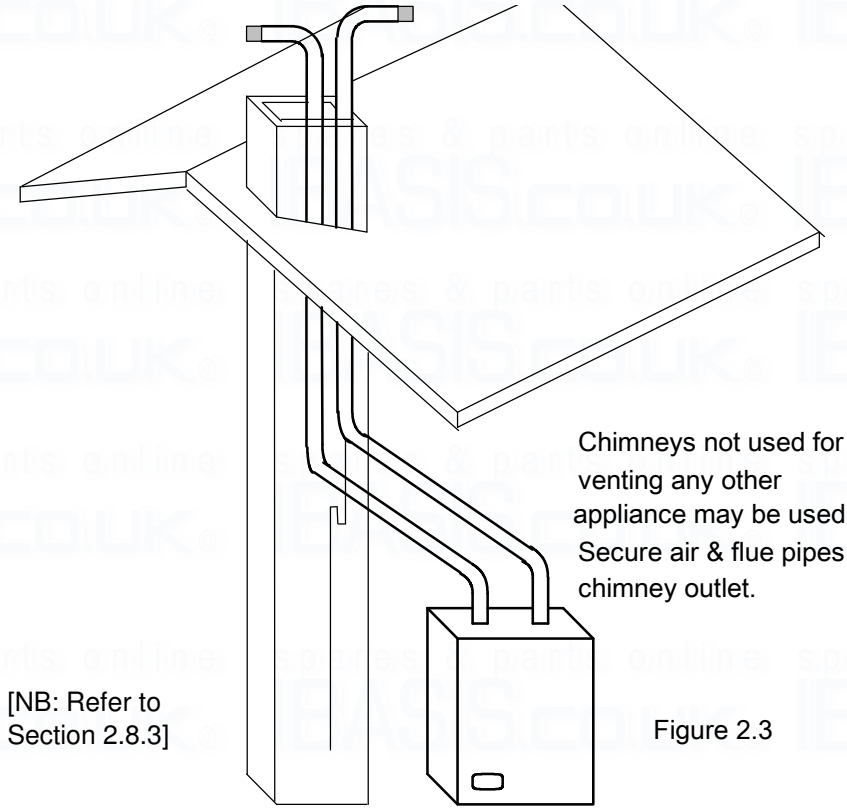

[NB: Refer to Section 2.8.3]

Figure 2.3

The wall on which the boiler is mounted must be of suitable load bearing capacity and must be non-combustible.

The Keston Celsius 25 can be located virtually anywhere desired provided that all regulations are complied with. Because of the boiler's compact size and venting flexibility, the installation is not limited to a boiler room setting. Before locating the boiler near a living space consider whether the sounds generated by the boiler will be objectionable. The boiler may be located within a cupboard enclosure to reduce noise levels if located within a living space. LPG boilers must not be installed in a cellar.

2.4 ELECTRICAL

2.4.1 Electrical Connections

The boiler must be connected to a permanent 230V ~ 50Hz supply, fused at 3A. **An additional switched live supply 230V ~ 50Hz rated at 2A or a pair of volt free contacts must be provided from the external system controls.** Wiring external to the boiler must be in accordance with current I.E.E wiring regulations and local regulations.
The method of connection to the mains electricity supply **must** facilitate complete electrical isolation of the boiler, preferably by the use of a fused, unswitched three pin plug and a shuttered socket-outlet, both complying with the requirements of BS 1363. There must be only one common method of isolation for the boiler and its control system.

The appliance must be connected to the 3A supply via a fused double-pole switch having at least 3 mm (1/8 inch) contact separation in both poles, serving only the boiler and the system controls.

The connection point to the mains supply should be readily accessible and adjacent to the boiler, except for rooms containing a bath or a shower. Refer to section 2.3 Position.

2.4.2 External Wiring & Controls

1. The boiler is designed so that **all** control wiring is external to the boiler.
2. A programmer may be used with zone valves to give independent control of central heating and hot water.

2.5 BOILER SIZE SELECTION

The Celsius 25 will automatically adjust heat output and pump speed to match the system requirements at any given time. Efficiency and combustion levels are maintained at optimum levels throughout the possible output range. The Celsius 25 is therefore suitable for all systems with a total heat load within the maximum range of the boiler.

2.6 GAS SUPPLY

A gas meter should be connected to the service pipe by the local gas region or their contractor. An existing meter should be checked preferably by the gas region to ensure that the meter is adequate to deal with the rate of gas supply required. Installation pipes should be fitted in accordance with BS 6891.

Minimum/Maximum Gas Pressure:

Natural gas pressure before the gas valve must be maintained at between 18 mbar (7.2 in WG) and 22 mbar (8.8 in) while the boiler is running.

LPG pressure must be maintained between 31.5 mbar (12.4 in w.g) and 37.6 mbar (14.8 in w.g) while the boiler is running.

Gas pressures above or below these levels will lead to problems associated with the gas valve's internal pressure regulator.

Supply pipes to the boiler must not be sized less than the boiler inlet connection (15 mm). Due consideration must be given to the supply pressure to other gas appliances in the premises. Reduction in dynamic gas supply pressure will result in intermittent ignition failures. Ensure gas supply pipe work is adequately sized for the length of run from the meter to the boiler at a supply rate of 26.1 kW.

A gas cock is supplied loose with the boiler. This cock should be fitted in the gas line to the boiler as close to the boiler as possible so that it is easily identified as the cock to isolate the boiler.

2.7 WATER SYSTEMS

All piping must be installed in accordance with all applicable local and Water Supply Bylaws for forced hot water heating systems.

Consideration must be given to pipe capabilities and pressure drop through the piping.

Water treatment must be carried out to BS 7593 : Treatment of Water in Hot Water Central Heating Systems.

a The Celsius 25 is suitable for use on open, vented water systems with combined feed and vent **fitted to the boiler return**.

b It is preferable for use on sealed water systems, provided the appropriate components required (see Section 2.7.2 Sealed Systems) are included in the system.

c Any system must be thoroughly flushed clean of grease, dirt and debris, prior to connection with the boiler. A trap may be installed in the flow line to collect any solder, or other debris, from the installation.

d All water systems must be constructed to comply with requirements of the Local Water Authority.

e Always use a system complying with the requirements of BS 5449 and BS 6798.

f System design must ensure an open circuit is always available to ensure circulation when the pump overrun function is operating after boiler shutdown.

g Copper tubing to BS 2871 Part 1 or barrier plastic pipe suitable to 110°C, such as Unipipe, is recommended.

h Jointing should be either with capillary, threaded or compression fittings. Pipes should have a gradient to ensure air is passed easily to vent points and water flows readily to drain points.

i Draining taps must be located in accessible positions which permit the draining of the boiler and hot water storage vessel. Draining taps should be at least 22 mm in nominal size and be in accordance with BS 2879.

AIR VENT POINTS

j These must be fitted at all high points where air will naturally collect and must be sited to allow complete draining of the system.

k. Where thermal stores are to be used the thermal store supplier should be consulted as to the compatibility of the thermal store with a Keston Celsius 25. Thermal store units where the boiler directly heats an open vented thermal store are not suitable for use with the Celsius 25.

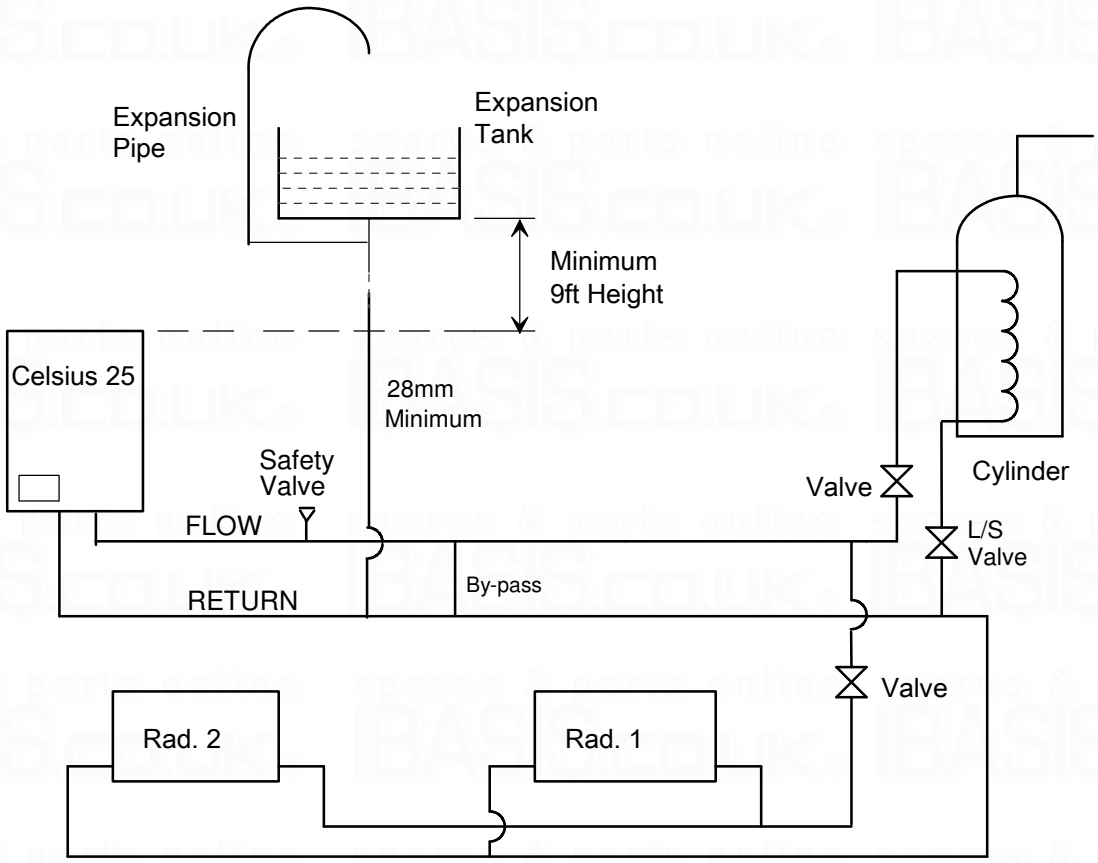

Figure2.7.1 : Open Vented System Diagram

2.7.1 Open Vented Systems

A typical system is shown in Figure 2.7.1 which includes a combined feed and vent. **Note that the combined feed and vent must be fitted to the primary RETURN.** A safety valve is specified for the primary flow to ensure discharge path at all times in the event the feed/vent connection is isolated from the boiler flow.[see 2.7.2(i)] Note that the minimum static head required is 9 ft at the top of the boiler.

Although suitable for open vented systems with combined feed and vent arrangements, the Celsius 25 is a low water content boiler. As such, any air entrainment within the system water will produce boiler “kettling”. It is therefore

recommended, if in any doubt, to consider the use of sealed systems where possible.

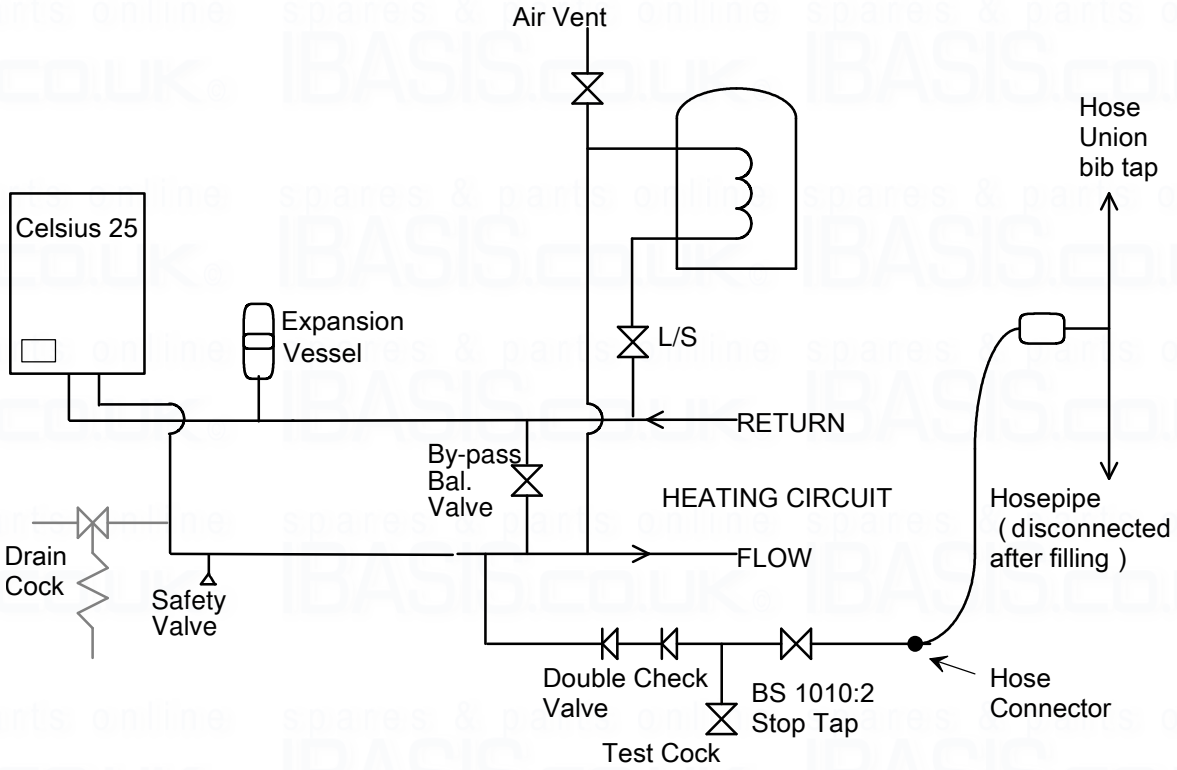

Figure 2.7.2 : Sealed System Diagram

2.7.2 Sealed Systems

A sealed system kit option (C.08.0.02.00.0) is available for the Celsius 25 featuring 8 litre expansion vessel, safety valve and connection manifold housed in a white casing which can be fixed to the base of the boiler. The kit also incorporates isolating valves on the flow, return and gas pipes. This allows the system kit to also be used as a pre-installation jig. The illustration below shows the dimensions of the kit.

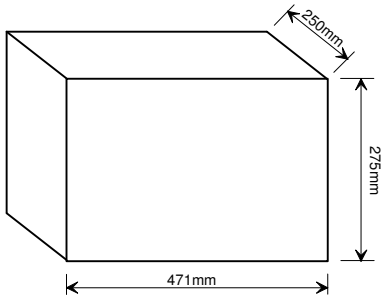

SEALED SYSTEM
KIT DIMENSIONS

Sealed systems must be designed in accordance with BS 5449 and BS 7074 Pt1. A typical sealed system is shown in Figure 2.7.2. It must include :

(i) A safety valve fitted on the flow, adjacent to the boiler. It must be non adjustable and preset to 3 bar. A drain pipe must be attached, at least as big as the valve connection, and routed to drain in any area not hazardous nor where it may be subject to freezing.

(ii) An expansion vessel complying with BS 4814 and sized in accordance with the requirements of BS 5449 and BS 7074 Pt 1. **The vessel must be positioned on the primary return to the boiler.**
(iii) A filling point, in accordance with local water authority requirements.
(iv) A method of system make-up (automatic or manual), in accordance with local water authority requirements.
(v) There must be no permanent connection of mains water to the boiler system.
(vi) The installation must be designed to work with flow temperatures of up to 110 °C.

All components of the system including the heat exchanger of the indirect cylinder must be suitable for a working pressure of 3 bar and a temperature of 110 °C. Care should be taken in making all connections that the risk of leakage is minimised.

2.7.3 Hot Water System (if applicable)

The hot water storage vessel must be of the indirect type (certain direct cylinders can be used provided they are suitably adapted by fitting an immersion calorifier). DIRECT CYLINDERS MUST NOT BE USED. Further guidance is provided in BS 1394. It is advisable to fit a locksheild valve on the cylinder return to enable balancing of the flow rate through the cylinder.

The Keston Spa range of stainless steel unvented cylinders are an ideal option for use with the Keston Celsius 25. The Keston Spa range combine exceptional recovery times with durable, long life stainless steel construction and all associated controls. Contact Keston Boilers Ltd for information

2.7.4 Boiler By-pass Piping

Boiler water flows are critical to the operation of the boiler. If flow cannot be maintained through the system piping to meet the minimums required by the boiler, insufficient water flows through the boiler will cause the boiler to "kettle" or even produce steam which can damage the heat exchanger and will invalidate the heat exchanger warranty. In addition, an open circuit is required after boiler shutdown to permit circulation during the boilers 2 minute pump overrun sequence.
It is normally advisable to incorporate a boiler by-pass in the system, especially if thermostatic radiator valves are used. The flow/return differential should be 10°C to 15°C.

2.7.5 Air Elimination

In the initial charge of water to the boiler system and in all subsequent additions of water to the system some air will be dissolved in the water. As the water is heated the air is driven out of the solution and will collect in high spots in the system. **These air bubbles can interfere with pumping and heat transfer and must be eliminated.**
Installation of air bleed valves at the high spot(s) in the system will allow for air elimination when filling the system and will allow re-venting in a day or so after all air has been driven out of solution.

2.7.6 System Pump Selection (if required)

The Celsius 25 features an integral circulating pump which has sufficient excess head to drive most domestic systems. The available head is c.5kPa (0.5m). If the system index circuit resistance is in excess of the available head from the integral pump an additional system pump will be required.

The schematic below illustrates a recommended approach to using an additional system pump. The additional system pump should be sized to overcome the index circuit resistance only as the boilers integral pump will overcome boiler resistance.

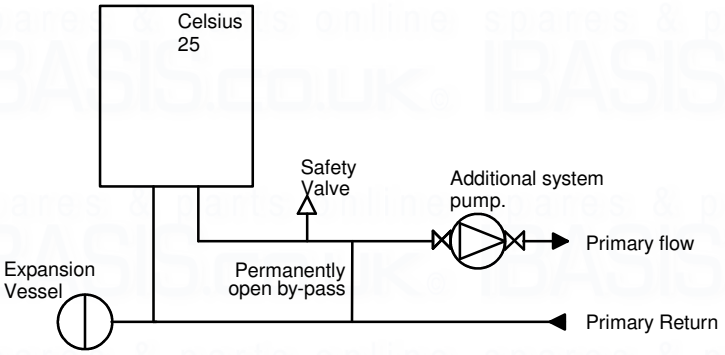

If an additional pump is required the selected pump must comply with BS 1394.

2.8 FLUE SYSTEM

2.8.1 Design

Individual air supply and flue outlet pipes are used. The material used for flue outlet &/or air inlet must be **muPVC** to BS 5255 and/or BSEN1566-1 and BSEN1329 of an internal diameter of 51 mm. (i.e. nominal 50 mm diameter muPVC solvent weld waste pipe).

Alternatively, where flue or air intake lengths of up tu 60m are required, Glynwed Friatec DN70 pipe may be used.

Both 50mm flue outlet terminal and 50mm air inlet terminal are supplied and are illustrated in Figure 2.8.1. Both terminals are identical. The flue and air terminals must be fitted to the appropriate duct using solvent weld adhesive. If 75mm terminals are required these can be obtained from your Keston Boilers stockist. Request part numbers C.17.2.26.00.0 (terminals) and C.17.2.00.60.0 (50 to 75 adapters).

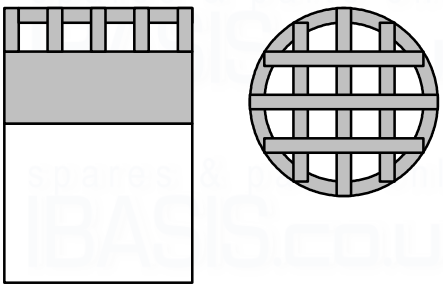

Flue Outlet/Air Inlet Terminals

Figure 2.8.1 : Terminals

2.8.2 Maximum Lengths

The maximum lengths of both air inlet pipe and flue outlet pipe, when no bends are used, are as detailed below.

		50mm	75mm
Maximum Air Inlet Length	:	39.0m	117.0m
Maximum Flue Outlet Length	:	20.0m	60m
Maximum Total Flue and Air Intake Length	:	40.0m	120.0m

However, each bend used has an equivalent length that must be deducted from the maximum straight length stated above. Knuckle bends must not be used.
A 92.5° sweep elbow is equivalent to 1.0m straight length.

<u>Example (assuming 50mm muPVC flue and air pipework)</u>
Air inlet uses two one 92.5° sweep elbows. Hence, maximum length permissible (i.e. a+b in figure 2.8.2) = 39.0m - 1.0m - 1.0m = 37.0m

Flue outlet uses one 92.5° sweep elbow. Hence, maximum length permissible (i.e. c+d in figure 2.8.2 = 20.0m - 1.0 m = 19.0m

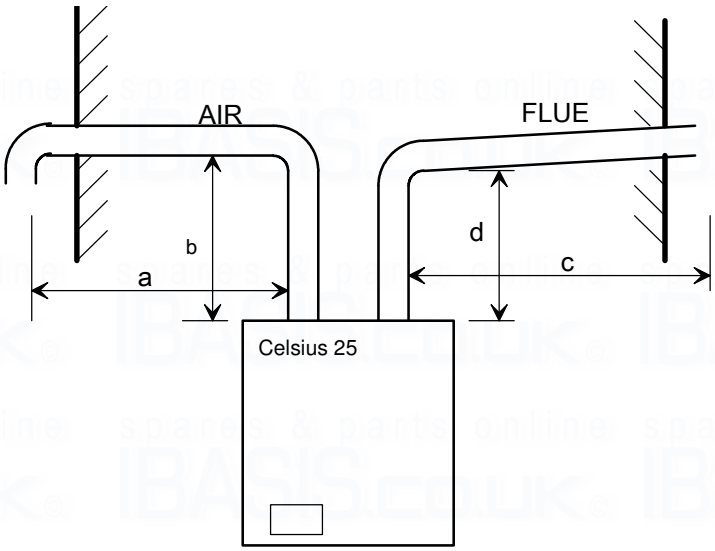

Figure 2.8.2 : Flue & Air Maximum Length Example

2.8.3 Slope

'Horizontal' flue outlet pipework MUST slope at least 2 degrees (32 mm per metre run) downwards towards the boiler. Pipework can be vertical. Only swept elbows can be used.
Air inlet pipework can be truly horizontal or vertical, or sloping in a downward direction towards the boiler but in this case rain, etc., must be prevented from entering the pipe. **There must be no troughs in any of the pipework, whether it be air inlet or flue outlet.**

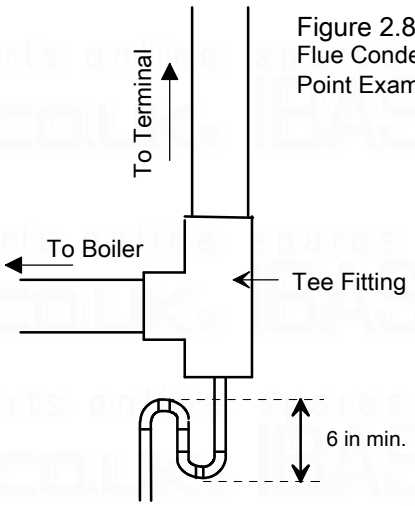

Figure 2.8.3 : Flue Condensate Drain Point Example

Due the low temperature of the flue gases further condensate will form within the flue system. Drain points, with suitable traps, must therefore be incorporated within the flue system at the base of vertical flue sections in excess of 8m, for 50mm muPVC pipe flue systems. These additional condensate drains must be run to discharge as detailed in section 2.11. Such drain points can be formed using standard muPVC fittings. Refer to the example in Figure 2.8.3.

2.8.4 Terminations

Air inlet terminals must be facing horizontally or downwards to prevent entry of rain into the terminal and positioned to ensure only fresh air is drawn into the boiler. The air terminal must be located outside of the building.

Drawing of combustion air directly from a ventilated boiler room invalidates the heat exchanger warranty.

	Dimensions (mm)	Flue Terminal	Air Inlet
A	Below or beside openable window, air brick, etc.	300	50
B	Below gutters, soil pipes, drain pipes.	75	75
C	Below eaves.	200	50
D	Below balconies or car port roof.	200	50
E	From vertical drain or soil pipes.	75	50
F	From internal or external corner.	200	50
G	Above ground or balcony or roof.	200	100
H	From surface facing a terminal	600	100
I	From terminal facing a terminal.	1,200	1,200
J	From opening in a car port.	1,200	100
K	Vertically from terminal on same wall.	1,500	1,500
L	Horizontally from terminal on same wall.	300	300

Table 2.8.4 Minimum Flue Terminations & Air Inlet Dimensions

The flue outlet terminal is designed to face outwards but can, if desired, be adapted to face in any direction BUT must not be directed in the region of the air inlet.
The two terminals are subject to the requirements of BS 5440 Pt 1 for clearances from features of the building although some can be decreased to the values indicated.
The Keston Celsius 25, as with any condensing boiler, will generate a condensate "plume" from the flue terminal in all weather conditions. Consideration must therefore be given to the effect of this "plume" when selecting a location for the flue terminal.
It is advisable for horizontal flue terminals to place a 45° elbow at the end of the flue to direct the condensate plume up and away from the property.

2.8.5 Clearances From Wall

Flue outlet and air inlet terminations must be at least 40 mm from the wall face.

2.8.6 Distance Between Flue Outlet & Air Inlet

There is no maximum - the terminations must not be on opposite sides of the dwelling but can be in areas of unequal pressure..
A minimum clearance of at least 200 mm must be left between the terminations.

2.8.7 General Installations

All parts of the system must be constructed in accordance with BS 5440 Part 1, except where specifically mentioned in these instructions.
All pipe work must be adequately supported.
All joints other than push-on or plastic compression connectors must be made and sealed with solvent cement suitable for muPVC pipes and conforming to BS 6209: 1982.
External wall faces and any internal faces of cavity walls must be made good.
Rubber collars are available for flue and air terminals to finish the external wall face around the terminals (Part No C.08.0.00.07.0)

2.9 AIR SUPPLY

The Celsius 25 is a room sealed appliance and therefore does not require purpose provided ventilation to the boiler room for combustion air.

2.10 COMPARTMENT INSTALLATION

Due consideration should be given to BS5440 pt 1 with regard to compartment ventilation requirements. High and low level ventilation is required for cooling purposes as follows:

Position of air vent	Air from room	Air direct from Outside
High	306 cm^2	153cm^2
Low	306 cm^2	153cm^2

Both vents must communicate to the same room or be on the same wall to outside.

2.11 CONDENSATE DRAINAGE

Being a condensing boiler, the Celsius 25 is fitted with a condensate trap at the base of the heat exchanger and flue assembly, with facility to connect to a drain point underneath the appliance.

Use only plastic piping and do not reduce below 15 mm internal diameter within the dwelling. Condensate should preferably be drained into the sanitary waste system or, alternatively, the rainwater system of the property in most cases. Ensure in all cases that the disposal of the condensate is in accordance with any local regulations in force.

Termination of the pipe must be either at a branch or stack internal to the house, or externally at an open gully. Alternatively, discharge into a purpose made condensate soakaway can be considered. Existing or purpose built drains must use suitable corrosion resistant material as condensate is mildly acidic.

The connection to the condensate drain of the boiler, and the condensate drain pipework itself, should be properly sealed to ensure there is no possibility of leakage into the dwelling.

A minimum slope downwards towards the drain of 1 in 20 is essential. Freezing of the termination and pipework must be prevented. Any drainage pipes outside the property must be at least 32 mm *inside* diameter.

3. INSTALLATION OF THE BOILER

Read Chapter 2 - Boiler Location and decide upon the position of the boiler.

Installation of the boiler is straightforward but consideration must be given to access to allow flue and air pipes to be pushed through walls and ceilings. The order in which the components are installed will depend upon particular site conditions, but in general it will be easiest and most accurate to install the boiler and then build up the flue outlet and air inlet pipes to the terminal - this is the sequence described.

3.1 WALL MOUNTING BRACKET

a Place the bracket on the wall horizontally with the pre-drilled holes at the bottom and position as dictated by the template supplied within the boiler packaging.

b Drill through the centre hole of the bracket, plug the hole and fix in position.

c Using a spirit level make sure the bracket is completely level and mark the position of the other screw holes.

d Remove the bracket and drill the holes in the positions marked. Plug these holes.

e Screw the bracket to the wall using screws of an appropriate size for the wall type (No. 12 x 2 inch wood screws normally suffice).

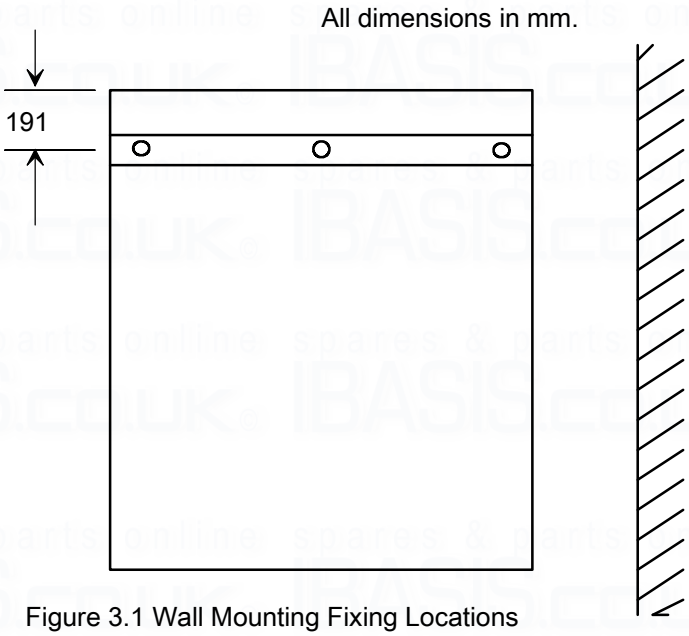

Figure 3.1 Wall Mounting Fixing Locations

3.2 MOUNTING THE BOILER

a Lift and locate the boiler in the studs protruding from the wall bracket.

b Fix the boiler on the bracket studs using the nuts supplied.

3.3 ASSEMBLY PRACTICE

Remove all plastic debris and burrs when installing air intake piping. Plastic filings caused by cutting muPVC pipe must not be allowed to be drawn into the combustion air blower. Prevent dust entering the air intake when cutting on building sites. Blower failure which is determined to be caused by plastic filings or other debris will not be covered by guarantee.

3.4 INSTALLING FLUE AND AIR PIPES

When installing a replacement boiler, a new flue system must be fitted. DO NOT RE-USE THE ORIGINAL FLUE SYSTEM.

Remember the flue pipe must slope downwards back towards the boiler and this is best achieved using 92.5° bends.

a Using the template supplied within the boiler packaging mark the positions of the two holes for the flue and air pipes on the wall(s) or ceiling.

b Drill the two holes in the wall/ceiling, preferably using a core drill.

3.4.1 Diameter of holes.

i) Allowance must be made for socketed lengths if these are to be passed through the holes :

du	=	unsocketed diameter	=	56mm
ds	=	socketed diameter	=	65mm

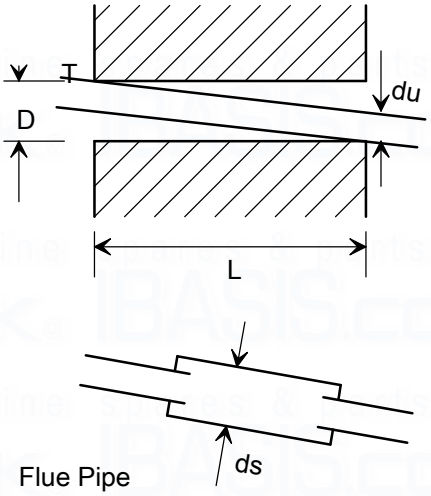

ii) For 'horizontal' runs of flue pipe the holes must either be oversized or cut at a 2° slope (the latter may be difficult on long holes).

3.4.2 Oversizing

For every 1m length of run, L, the minimum diameter of the horizontal hole, D, must be du + 32 mm or ds + 32 mm respectively, assuming the pipe touches the wall at points T otherwise D will have to be increased by clearance from T. See Section 3.4.3 - Examples.

3.4.3 Examples

a.

Wall Depth	L	=	750 mm
Unsocketed pipe	du	=	56 mm
Diameter hole	D	=	56+[750/1000 x 32]
		=	56+24
		=	80 mm

b.

Wall depth	L	=	2.3 m
Socketed Pipe	ds	=	65 mm
Diameter Hole	D	=	65+[2.3 x 32]
		=	65+73.5
		=	138.5 mm

c. Measure, cut and check the air and flue pipes to pass to the exit from the wall(s) or ceiling.

Always thoroughly deburr all pipes and, <u>most important, remove shavings from within the pipe</u>.

d. Mount the boiler on the wall bracket and fix the flue and air spigots (packed loose with the boiler and with appropriate gaskets) to the boiler flue and air outlet connections (the flue spigot incorporates a combustion test plug) tightly to ensure there is no leakage. Assemble, using adhesive, the pipework from the boiler connections to the exit from the first wall/ceiling (remount the boiler if removed). When pushing pipe through walls, ensure grit and dust is not allowed to enter the pipe.
Ensure pipes are fully engaged into sockets.
Connect the condensate drainage system and fill the condensate trap by pouring water down the boiler flue spigot (See Section 3.5 Condensate Drainage).

e. Using the same methods drill any further holes (always covering existing pipework), cut and assemble the pipework.

f. From outside, complete the two terminations - See Section 2.8 Flue System and make good all holes.

g. Support any pipes whose route could be displaced either of its own accord or by accident. Any horizontal run over 1m or vertical runs of any length must always be supported. Brackets should be placed at intervals of approximately 1m.

h. Check all connections for security and re-seal any joints using solvent cement where soundness may be in doubt.

Note: It is equally important to seal the air inlet with solvent cement as the flue outlet pipe joints.

3.5 CONDENSATE DRAINAGE

Connect the condensate drainage system to the boiler. It is advisable to use a detachable fitting at connection to the boiler to enable easy removal for servicing.
Fill the condensate trap by pouring water into the boiler flue spigot until water is seen to flow freely from the condensate drainage system. Make the final connection of flue pipe to the boiler.

Details are provided in Chapter 2 - Section 2.11 Condensate Drainage
Connection : 22 mm plastic pipe.

3.6 WATER SYSTEM

Connect the flow and return pipework to the boiler. Details of system requirements are given in Chapter 2 - Section 2.7 Water Systems.
Connections : 0.75” BSPF

For optimum performance after installation, this boiler and its associated central heating system must be flushed in accordance with the guidelines given in BS7592:1992, "Treatment of water in domestic hot water central heating systems".
This must involve the use of a proprietary cleaner, such as Fernox Superfloc, or BetzDearborn's Sentinel X300 or X400. Full instructions are supplied with the products, but for immediate information, please contact Fernox on 01799 550811 or BetzDearborn on 0151 420 9563.
For long term protection against corrosion and scale, after flushing, it is recommended that an inhibitor such a Fernox MB1 or BetzDearborn's Sentinel X100 is dosed in accordance with the guidelines given in BS7593:1992.

3.7 GAS SUPPLY

Connect the gas supply to the appliance. Details of gas supply requirements are given in Chapter 2 - Section 2.6 Gas Supply. Supply of adequate gas pressure **(with the boiler running)** is critical to ensure reliable operation of the boiler.
Connections : 0.75 inch BSPF.

3.8 ELECTRICAL SUPPLY

The entry point(s) for the electrical supply cable(s) is in the base of the appliance (see Section 2.2 Service Connections fig. 2.1.2) via two cord grip bushes. Feed the cable(s) through its bush and route inside the cabinet to the connection strip located to the front bottom right of the cabinet.

1. The electrical supply must be as specified in Chapter 2 - Section 2.4 Electrical Supply.
   WARNING : THIS APPLIANCE MUST BE EARTHED.
2. All external controls and wiring must be suitable for mains voltage.Supply wiring should be in PVC insulated cable not less than 1.0mm^2 to BS 6500 Table 16 (material code H05VV-F).
3. The permanent live supply connection may be via a 3 amp fused double pole switch, serving only the boiler. (Refer to Chapter 2 - Section 2.4 Electrical Supply). The system controls and 2A switched supply for the boiler must also be supplied via this isolator.
4. Securely tighten the terminal screws and route the cable through the re-openable cable clips. Ensure all cables are secured and that the cord grip bush is tightened to securely grip the main cable at entry to the cabinet. Remove the factory fitted link wire between terminals SL and SL(Link) on the boiler.
   The supply cable(s) must be connected to the main terminals as follows:

N	-	Blue wire (Neutral) for 3A permanent and 2A switched supplies
PL	-	Brown wire (Live) 3A permanent supply
⏚	-	Yellow/Green Wire (Earth)
SL	-	Brown wire (Live) 2A switched supply.
OR		
SL & SL(LINK)	-	Link connection via volt free external controls
LO	-	To external 230V remote lockout monitoring (optional)
RUN	-	To external 230V remote run monitoring (optional)

Ensure connection is made such that if the cable slips in its anchorage the current carrying conductors become taut before the earthing conductor.

3.9 EXCHANGING A BOILER

Before removing an existing boiler add Fernox Supafloc , or equivalent cleaning agent, in accordance with the manufacturers instructions. Open all radiator valves and fire the boiler. When the system is fully heated, shut off the gas supply and drain down the central heating system.

Important

The Celsius 25 condensing boiler contains components which could be damaged or blocked by grease, dirt or solder etc. It is essential that sludge or scale is removed from an existing system.

The guarantee provided with the Keston Celsius 25 does not cover damage caused by system debris or sludge.

Connect the new boiler as instructed in this manual and fit in accordance with Sections 3.1 to 3.8

For sealed systems, fill to a pressure of about 2.7 bar. Check the complete system for water soundness. If leaks need to be rectified using flux or solder the system must be flushed cold again before proceeding.

Reduce the pressure to the Initial System Design Pressure for sealed systems, if applicable. Vent the system.

Gas Supply

The complete gas installation up to the boiler service cock must be checked for soundness. BS 6891.

Electrical Installation

Carry out preliminary electrical safety checks, i.e. Earth continuity, Polarity, Resistance to Earth, Short Circuit using a suitable test meter.

Initial Firing

The gas pressure setting is factory adjusted to within the required range and does not need re-adjustment. If the reading is incorrect then check such factors as soundness of the air and flue pipe joints, pressure sensible joints and the gas inlet pressure (minimum 18 mbar required for Natural Gas and 31 mbar required for LP gas). If all joints are sound and the gas inlet pressure is satisfactory set the gas pressure and check the gas input. Full details of this procedure are given in Section 4.8 Timing The Gas Meter.

Combustion Testing

It is advisable on all installations that the combustion quality is checked by measuring the carbon dioxide (CO_2), or oxygen (O_2) level. This procedure is detailed in Section 4.9 Combustion Testing. Badly tuned combustion will lead to reduce the life of the boiler and invalidate the warranty.

4. COMMISSIONING OF THE BOILER

Important:
This condensing boiler contains components which could be damaged or blocked by grease, dirt, solder etc., from the water system. The following commissioning procedures must be followed precisely.
It is essential that combustion is checked at high and low rate , as per Section 5.7, using a calibrated flue gas analyser set for the relevant gas type.

4.1 INITIAL FLUSHING

All waterways within the Keston Celsius 25 are either copper, high alloy stainless steel or aluminium. As a result water treatment chemicals for central heating boilers such as Fernox MB1, or equivalent, are suitable. In any event reference must be made to BS 7593 : Treatment Of Water In Hot Water Central Heating Systems.

a. Disconnect the boiler from the system at the flow and return connections and temporarily link the flow and return pipes on the system.
b. Flush the entire system until clean water is discharged, free from dirt, flux, solder etc. The use of a flushing chemical is recommended, e.g. Fernox Supafloc, or equivalent.
   Sludge and scale must be removed from an existing system. Boiler failure due to system debris or sludge shall invalidate the guarantee.
c. Connect the system to the boiler and fill in accordance with Section 2.7 - Water Systems. At this stage, for sealed systems, fill to a pressure of about 2.7 bar.
d. Check the complete system for water soundness. If leaks need to be rectified using flux and solder, the system must be flushed cold again before proceeding.
e. Reduce the pressure to the Initial System Design Pressure for sealed systems, if applicable. Vent the system

4.2 GAS SUPPLY

The complete gas installation up to the boiler service cock must be checked for soundness. BS 6891.

4.3 ELECTRICAL INSTALLATION

Carry out preliminary electrical safety checks, i.e. Earth continuity, Polarity, Resistance to Earth, Short Circuit using a suitable test meter.

4.4 LP GAS

The Keston Celsius 25 is supplied preset for the gas designated on the boiler packing. No field conversion is possible. LPG installations must use Celsius 25P models only.

4.5 INITIAL FIRING

Important
Checking the gas pressure to the pre-mix burner requires a special procedure, outlined below, which must be carried out.

a. Purge the gas supply in accordance with BS 6891.
b. Vent the water system.
   Important:
   The Celsius heat exchanger consists of crossflow tubes which can trap an air pocket. Great care must be taken to ensure that water flow has been established through the heat exchanger and thus ensuring no air pockets remain in the heat exchanger and pipe work. Firing the boiler while an air pocket exists in the heat exchanger could damage it.
c. Turn the gas service cock to ON.
d. Turn on the electrical supply, setting any external controls to call for heat.
e. Set the boiler user control knob clockwise to the desired temperature setting. The mains LED (green) will illuminate continuously. After approx 10 seconds the boiler fan and pump will start on ignition rates. After a few seconds the yellow Boiler ON LED will flash and a spark will light gas at the main burner, provided all

air has been purged from the gas supply to the boiler. When the burner is lit and the boiler is operating normally the yellow Boiler On LED will illuminate continuously and the four green modulation LEDs will show the output level the boiler has determined is necessary for the heating load. If an air lock or other blockage is present the unit may go to overheat or water pressure lockout. If this occurs clear the blockage and/or purge the air from the system, turn the user control knob off (fully anticlockwise) and repeat the procedures.
If ignition does not occur, the boiler on (yellow) LED will be extinguished and, at approximately 20 second intervals, the electronic ignition system will make four further attempts to light the burner.
If the ignition is successful and the boiler is operating normally, the green (mains) LED and the boiler on (yellow) LED will be illuminated simultaneously.
If after five automatic attempts the boiler still fails to ignite, the yellow (boiler on) lamp will be extinguished and the red (lockout) lamp will flash twice every two seconds.
If, after five manual attempts (to allow for purging of any air in the gas line), the boiler still fails to ignite (indicated by the red (lockout) lamp) refer to Section 5.2 - Fault Finding Flow Chart.

f. **Check for gas soundness between the gas service cock and connection to the burner manifold.**

4.6 HOT FLUSHING

a. Allow the system to heat up, checking for water soundness.
b. Follow instructions provided with the cleaning agent, ie Fernox Supafloc, or equivalent. Turn off the boiler and flush the water system while still hot. Thoroughly flush the system with clear water.
c. Refill the system using a quality water treatment such as Fernox MB1. For sealed systems, fill to the required Initial Design Pressure.

4.7 CHECKING THE GAS PRESSURE

With the boiler running measure the burner pressure at the burner pressure test nipple. (pos. 5).

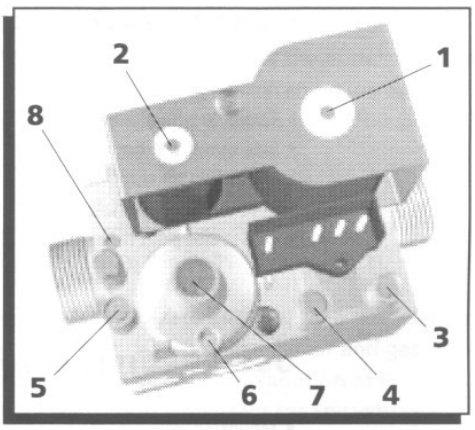

NB: It is advisable to carry out this test with the user control knob turned to maximum and the system water cold to ensure the boiler is running at maximum rate.

The gas setting is factory adjusted to within the required range and should not need adjustment. If the reading is incorrect then check such factors as soundness of the air and flue pipe joints and the gas inlet pressure (pos. 3) (minimum 18 mbar required for natural gas, minimum 31 mbar required for LP gas). ***If all joints are sound and the gas inlet pressure is satisfactory check the gas input by timing the gas meter as detail in Section 4.8 Timing The Gas Meter. If the gas input cannot be measured then it's compulsory to measure the combustion quality as detail in Section 4.9 Combustion Testing.***

4.8 TIMING THE GAS METER - NATURAL GAS

After the boiler has been started, and with no other appliances using gas, time the gas meter to be certain that the unit is running at the proper gas input. Determine the cubic feet of gas passing through the meter and determine the input in Btu per hour. Input must be within plus or minus 5% of the rated input.
Time, in seconds, the time taken to pass 2 cubic feet of gas through the meter (ie one revolution of a 2 cu ft dial) or 0.1 cubic metres if the meter is of the new metric digital type.

The Keston Celsius 25 (natural gas model), when correctly set and operating at maximum rate, should take 84 seconds for 2 cubic feet of natural gas and 148 seconds for 0.1 cubic metres of natural gas (assuming 1038 btu/h per cubic foot).
If the meter timing is found to be incorrect when the boiler is firing at maximum rate contact Keston Boilers Ltd for further guidance.

4.9 COMBUSTION TESTING

Although the gas pressure is preset at the factory it is required to assure proper combustion by measuring gas input and the level of carbon dioxide, or oxygen and carbon monoxide, in the flue outlet from the boiler. Over firing or under firing the burner will reduce the longevity of the appliance and may result in excessive carbon monoxide levels.

To set the high / low fire adjustment follow the procedure from Chapter 10.

Carbon dioxide and carbon monoxide are colourless, odourless gases produced by all combustion processes. When the Keston condensing boiler is operating properly, carbon dioxide (CO_2) levels will be between 8 & 8.5% (low rate) and 8.5 & 9% (high rate) and carbon oxide (CO) levels will be between 5 to 20 ppm (low rate) and 50 to 150 ppm (high rate) for natural gas. For LP gas, carbon dioxide (CO_2) levels will be between 8.9 & 9.3% (low rate) and 9.5 & 10% (high rate) and the carbon monoxide will be between 5 & 20 ppm (low rate) and 50 & 150 ppm.
In any event, the CO_2 level at low rate must ALWAYS be less than CO_2 levels at high rate.

To measure CO_2 levels in the Keston boiler remove the 1/8" plug from the flue outlet pipe spigot (Figure 5.7.4 item 19). Insert the probe of a calibrated combustion analysis meter and sample the gases as instructed in the test equipment's instructions.

When firing the boiler for the first time since installation, the CO level at high rate may be between 100-220 ppm and between 50-80 ppm at low rate. This is due to compounds used during manufacture curing within the combustion chamber. On boilers which have been fired for more than one hour since installation, the CO levels should not exceed 150 ppm at high rate and 50 ppm at low rate. If CO levels above these values are experienced, the combustion chamber and flue system should be investigated.

4.10 HANDING OVER TO THE USER

It is important to fully explain the following:

a. Procedure to light and turn off the boiler, including isolation of the electrical supply if necessary.
b. The function of the lockout feature must be explained :
If the red lockout LED flashes twice every 2 seconds this means that the boiler has failed to light. Turn off the user control knob off (fully anticlockwise) and wait 10 seconds. Turn ON again and wait.
   i) If lockout recurs immediately then the gas supply should be checked as ON, otherwise consult a Service Engineer.
   ii) If it is not possible to relight, the boiler must be isolated and a Service Engineer called in to rectify the fault.
c. Advise that a reduction in the water pressure reading on the system gauge, for sealed systems, indicates a leak which should be rectified before further use.
d. Advise that the appliance should be serviced by a competent person at least once a year.
e. Advise on the frost protection and pump/fan exercise feature.
f. Hand over User Instructions.

Complete all sections of the **Chapter 9 Gas Boiler Commissioning Checklist** that are relevant to the appliance installation. The details will be required in the event of any warranty work.

g. Advise the user that a plume of water vapour (steam) from the flue terminal is normal and that there is no need for concern.

5. FAULT FINDING

5.1 ELECTRICAL CONTROL SEQUENCE

When the external controls are calling for heat, power will be fed to the boiler connection strip at terminals PL (Permanent Live), SL (Switched Live) and N (Neutral). If the user control knob is in the off position the green mains LED will flash rapidly. If the user control knob is set to a temperature greater than the boiler flow temperature the green mains LED will be lit continuously. Provided all temperature thermostats and pressure switches are closed the control PCB will initiate the following sequence.

(1) The fan will start.

(2) When the fan reaches ignition running speed, will start the ignition sequence.

(3) After a pre-purge period of about 10 seconds, the yellow burner on LED will flash, the gas valve will open to allow gas to mix with the air at the suction side of the fan and the ignition spark will occur at the main burner.

(4) When the burner ignites, the flame is detected by the ignition pcb through the combined flame sensor/ignitor and the ignition spark is stopped. The boiler on (yellow) LED will change to be continuously illuminated and the four modulation (green) LED's will indicate the boiler power level. The boiler is now in its normal run condition.

(5) The boiler will automatically and continuously adjust its power output and pump speed to best match the demands of the system at any time. In the event the boilers integral pump cannot maintain sufficient boiler water flow to disperse the heat generated the red pump LED will flash slowly (1Hz). If this occurs any system restriction should be cleared. If this persists due to an abnormally high system resistance consideration should be given to an additional system pump. In the event the boilers integral pump cannot reduce the water circulation to ensure the most efficient transfer of heat to the system water the red pump LED will flash rapidly (5Hz). If this occurs consideration should be given to regulating valves on the system to restrict system flow rates.

(6) The burner will continue to operate until the gas valve interrupts the gas supply. The gas valve will be closed by the control pcb if power is interrupted to the boiler by any external control or the boiler thermostat. If an interruption to the gas supply causes loss of the flame, the control box will pause for approximately 10 seconds and then attempt to re-ignite the unit. If this attempt fails, i.e. due to continued lack of gas supply, the boiler will make four further attempts to ignite at intervals of approximately 10 seconds and will then go to a lockout state (red lockout LED flashing twice every two seconds). Once the gas supply has been resumed the boiler can be reset by turning the boiler off and then on again on the user control knob.

(7) The boiler can also be shut down by any of the flow overheat, cabinet temperature sensor and flue overheat thermostats.
In such an event the yellow (boiler on) LED will be extinguished and the red lockout LED will flash once every 2 seconds. The precise safety sensor activated will be indicated by the appropriate green modulation LED being illuminated as detailed below:

Modulation LED 1	Flow Overheat Thermostat
Modulation LED 2	Cabinet Temperature Sensor
Modulation LED 3	Flue Overheat Thermostat

In the event the system water pressure drops below 0.2 bar the low water pressure switch will shut down the boiler. In such circumstances the yellow (boiler on) LED will be extinguished and the red lockout LED will flash three times every two seconds.

Any failure of the boiler to sequence in the above manner should be investigated using the following trouble shooting flow diagram.

Before attempting any electrical fault finding, always carry out preliminary electrical system checks. On completion of any service/fault finding task which has required the breaking and remaking of electrical connections, the checks, earth continuity, polarity, short circuit, resistance to earth must be repeated.

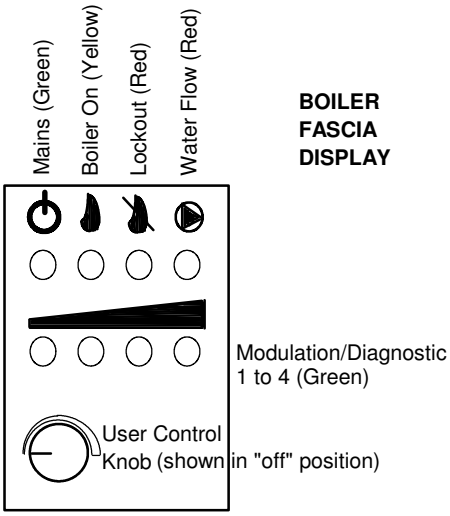

QUICK REFERENCE
ENGINEERS FAULT DISPLAY TABLE

MAINS (GREEN)	BOILER ON (YELLOW)	LOCKOUT (RED)	OTHER LAMPS	FAULT DESCRIPTION ACTION TO TAKE
OFF	OFF	OFF	-	No power to boiler. Check power supply.
Rapid Flash	OFF	OFF	-	Boiler off on front. Turn User Control Knob to On.
Slow Flash	OFF	OFF	-	External controls not calling for heat.
ON	OFF	Flashing once every 2 seconds	DIAG LED 1 ON	Flow Overheat. Reset boiler off then on via User Control Knob. Check circulation through system. Check by-pass fitted..
ON	OFF	Flashing once every 2 seconds	DIAG LED 2 ON	Cabinet overheat. Replace thermal fuse link (82°C). Check for heat leak from gaskets. Check pump and fan run-on working OK when controls shut blr down.
ON	OFF	Flashing once every 2 seconds	DIAG LED 3 ON	Flue Overheat. Reset on stat. Fire boiler and check for actual flue temperature.
ON	OFF	Flashing once every 2 seconds	DIAG LED 4 ON	Should not occur. This is a spare sensor connection. This fault display indicates a fault on the wiring loom.
ON	OFF	Flashing twice every 2 seconds	DIAG LED 1 ON	Ignition failure. The boiler has tried five times to fire and has not suceeded. Possible spark gap, gas pressure, flue/air blockage, condensate trap blocked, faulty ignitor or faulty ignition pcb.
ON	OFF	Flashing twice every 2 seconds	DIAG LED 2 ON	Boiler lost flame whilst running. Check condense trap for blockage, flue/air blockage or bad combustion..
ON	OFF	Flashing 3 times every 2 seconds	DIAG LED 1 ON	Flow thermistor not connected or faulty.
ON	OFF	Flashing 3 times every 2 seconds	DIAG LED 2 ON	Return thermistor not connected or faulty.
ON	OFF	Flashing 4 times every 2 seconds	-	Water pressure low. Top up system pressure (if sealed system). Check boiler for leaks. Advise customer..
ON	OFF	Flashing 5 times every 2 seconds	-	Fan speed failure. The fan speed has dropped below 500 rpm. Check fan, connections and fan pcb.
ON	OFF	Flashing constantly	-	Fan pcb faulty. - Replace

5.2 FAULT FINDING FLOW CHART - GENERAL

PRIMARY CHECKS

The following conditions should be checked before commencing the fault finding process.

1) A permanent live of at least 190VAC should be present at terminal 1 (PL)
2) A signal live of at least 190VAC should be present at terminal 4 (SL)
3) Earth continuity should be present at terminal 3 (E)
4) All isolating valves should be open and both the system and boiler should be fully vented.
5) A gas supply pressure of at least 18 mbar for natural gas or 31 mbar for LP gas is measured at the inlet when the boiler fires, or attempts to fire.
   The Celsius 25 requires a gas supply pipe rated for at least 26.1kW input irrespective of the system requirement.
6) Check the flue installation is correct and with obstruction of flue or air ducts.

NOTE: The Celsius 25 features a 120 seconds anti-cycle/post purge function. Allow 120 seconds to pass before commencing fault finding.

NB: Once rectified all faults and error displays can be reset by turning the user knob off then on. If the unit will not reset and the fault has been rectified check connections to the fascia PCB. If these are intact the fascia PCB should be replaced.

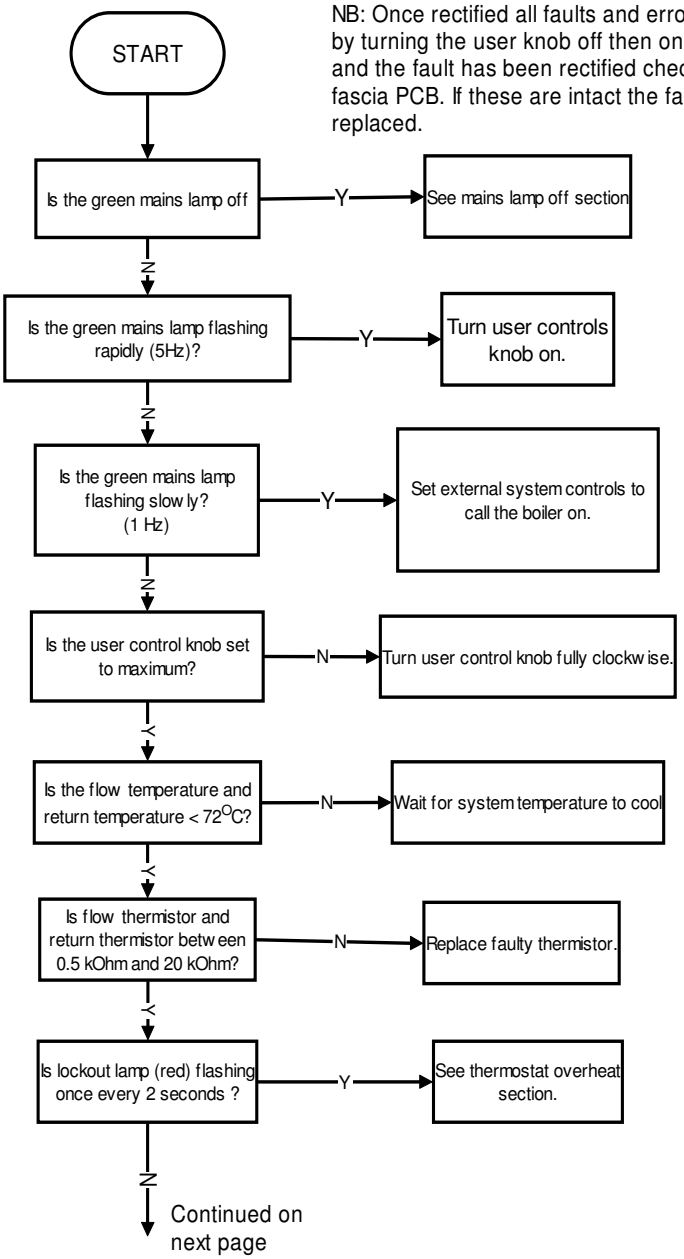

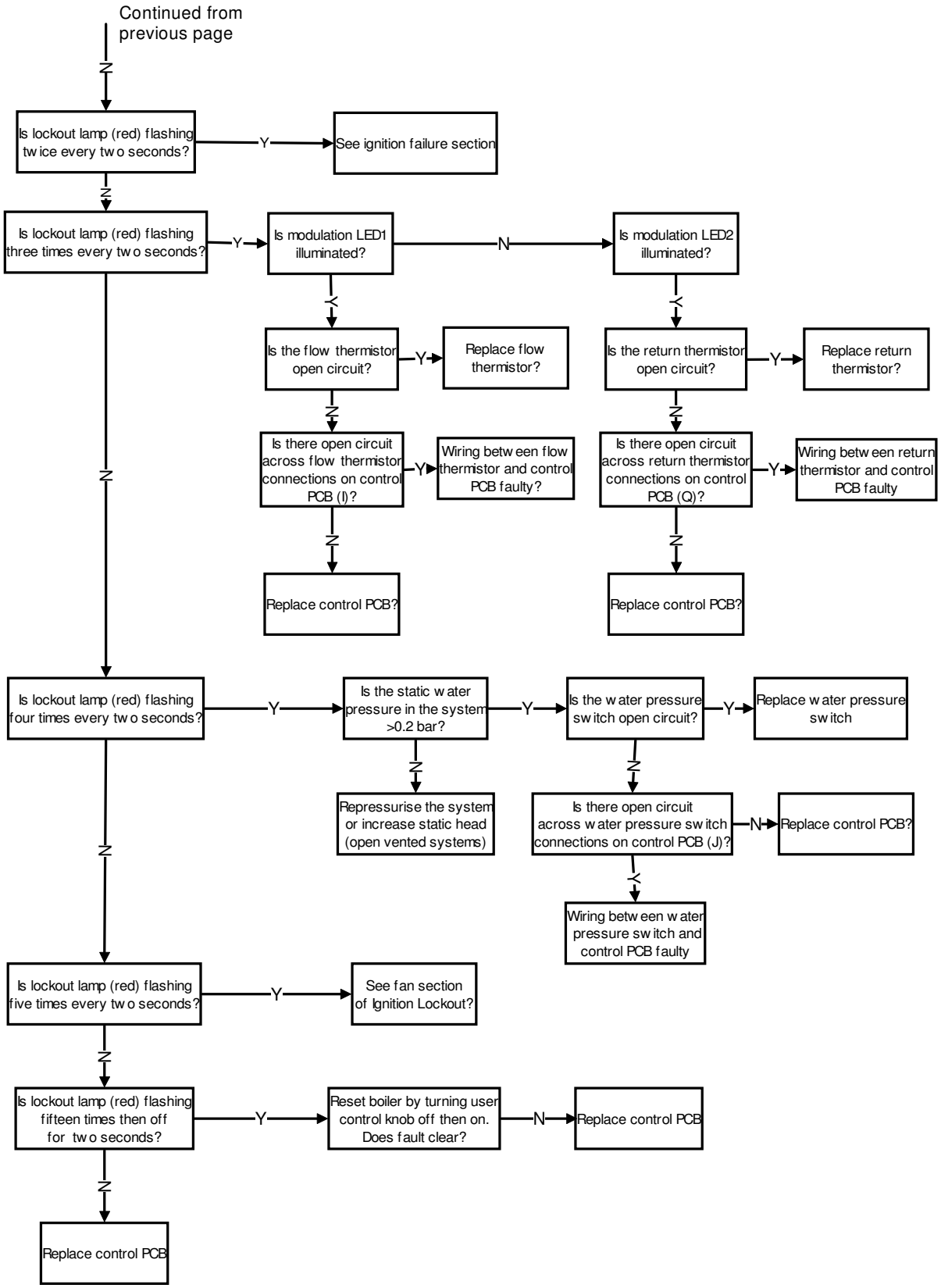
Continued from previous page
N
Is lockout lamp (red) flashing twice every two seconds?
Y
See ignition failure section
N
Is lockout lamp (red) flashing three times every two seconds?
Y
Is modulation LED1 illuminated?
N
Is modulation LED2 illuminated?
Y
Is the flow thermistor open circuit?
Y
Replace flow thermistor?
N
Is there open circuit across flow thermistor connections on control PCB (I)?
Y
Wiring between flow thermistor and control PCB faulty?
N
Replace control PCB?
Y
Is the return thermistor open circuit?
Y
Replace return thermistor?
N
Is there open circuit across return thermistor connections on control PCB (Q)?
Y
Wiring between return thermistor and control PCB faulty
N
Replace control PCB?
N
Is lockout lamp (red) flashing four times every two seconds?
Y
Is the static water pressure in the system >0.2 bar?
Y
Is the water pressure switch open circuit?
Y
Replace water pressure switch
N
Repressurise the system or increase static head (open vented systems)
N
Is there open circuit across water pressure switch connections on control PCB (J)?
N
Replace control PCB?
Y
Wiring between water pressure switch and control PCB faulty
N
Is lockout lamp (red) flashing five times every two seconds?
Y
See fan section of Ignition Lockout?
N
Is lockout lamp (red) flashing fifteen times then off for two seconds?
Y
Reset boiler by turning user control knob off then on. Does fault clear?
N
Replace control PCB
N
Replace control PCB

5.3 Fault Finding Flow Chart - Detailed

MAINS LED OFF

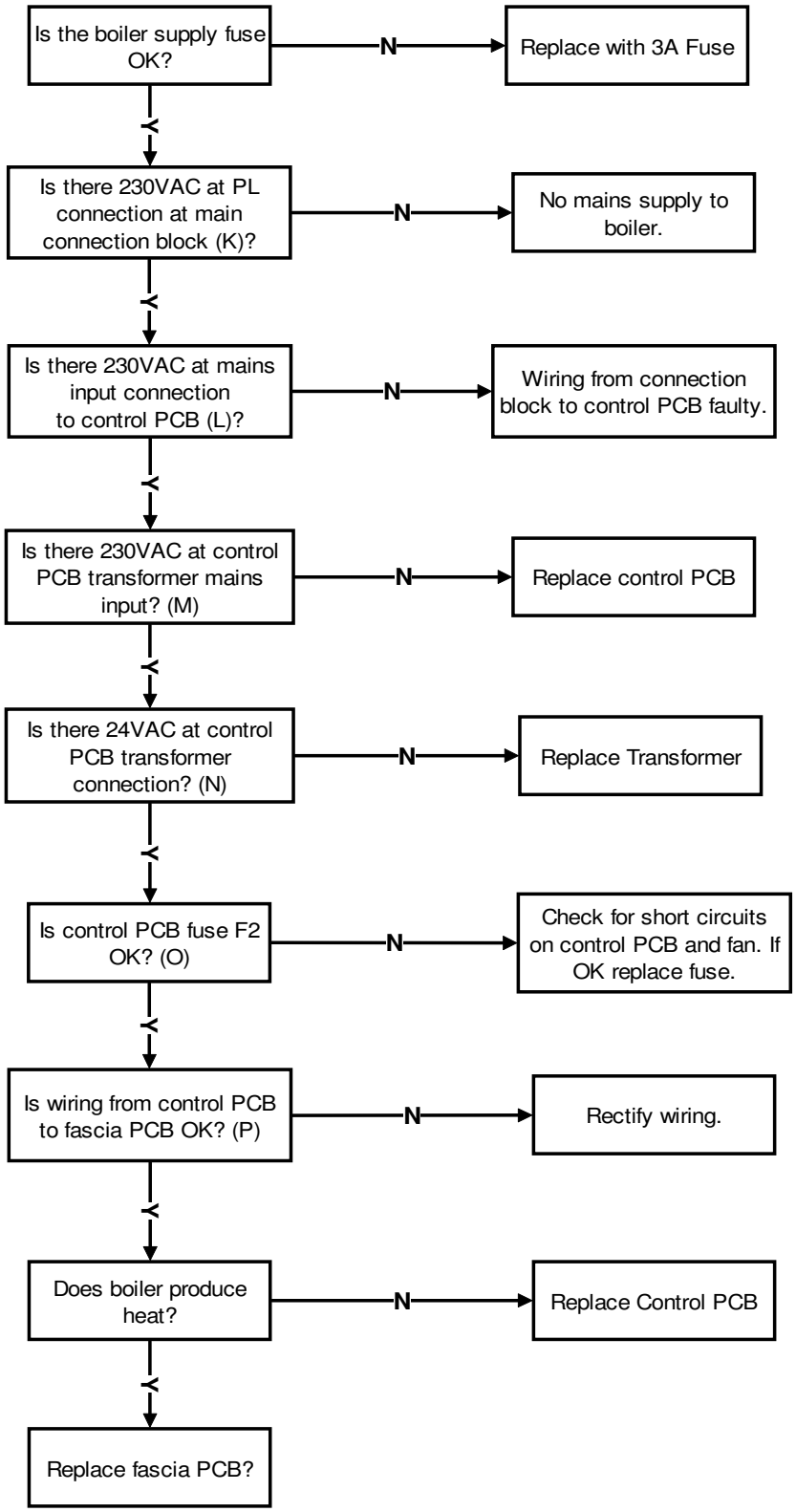

IGNITION FAILURE

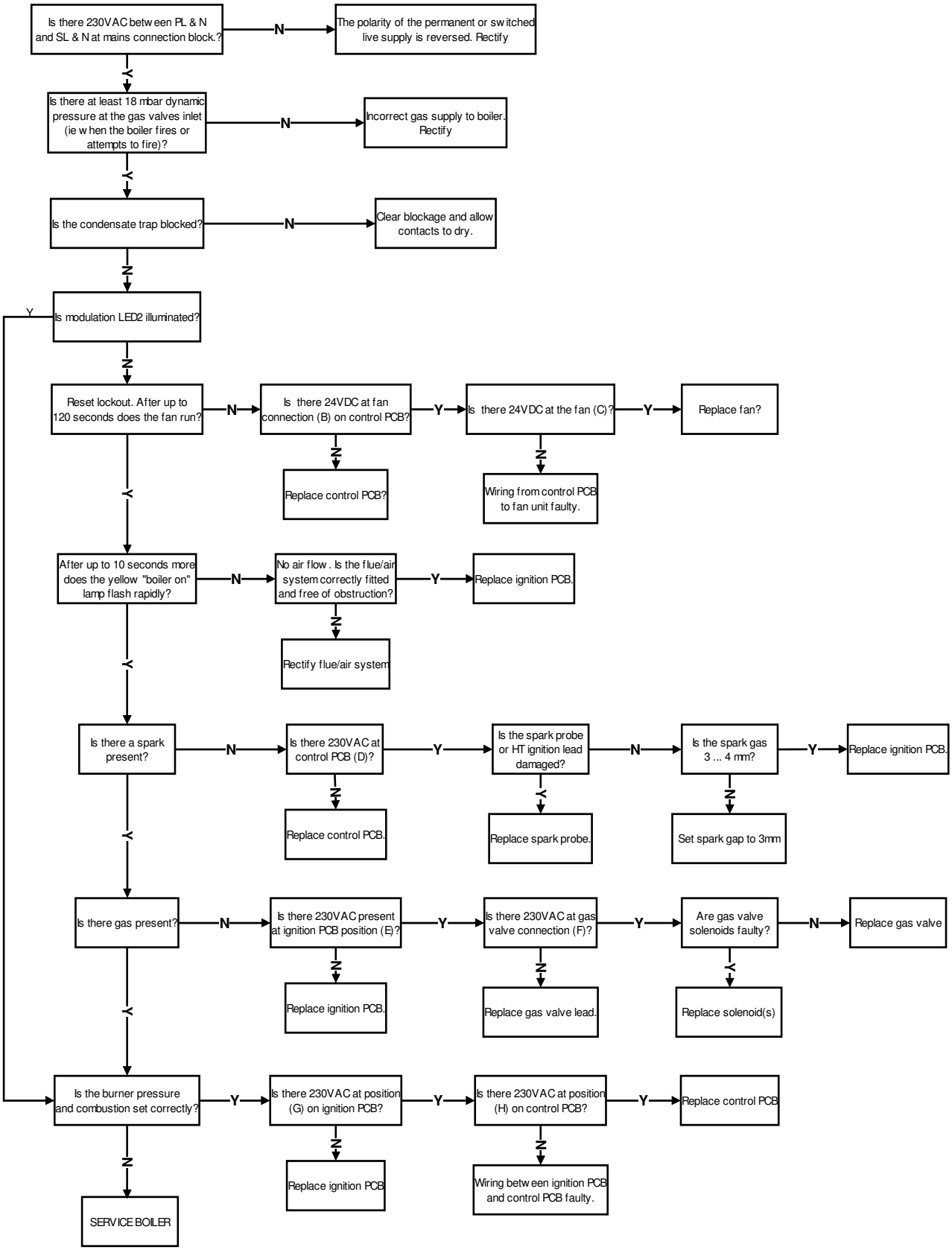

THERMOSTAT OVERHEAT

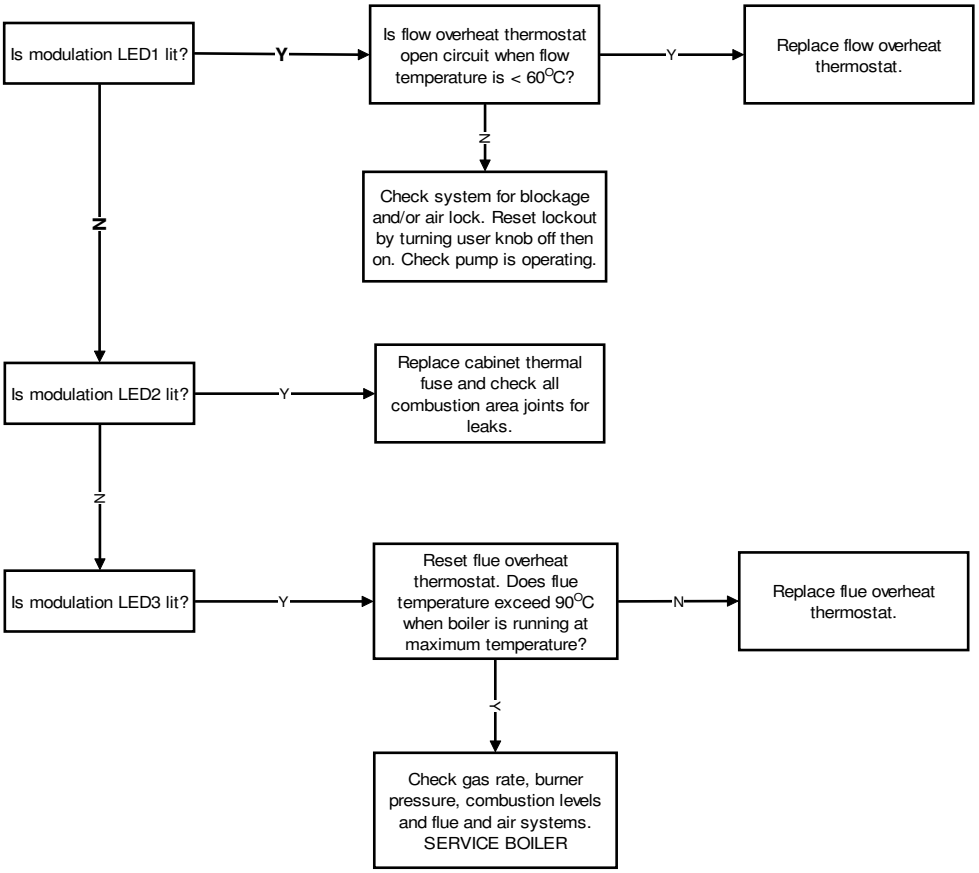

AFTER ANY THERMOSTAT OVERHEAT IS ACTIVATED THE BOILER WILL NOT RESTART OR CLEAR THE ERROR DISPLAY UNTIL THE UNIT IS RESET MANUALLY BY TURNING THE BOILER OFF THEN ON BY THE USER CONTROL KNOB.

5.4 FUNCTIONAL FLOW WIRING DIAGRAM

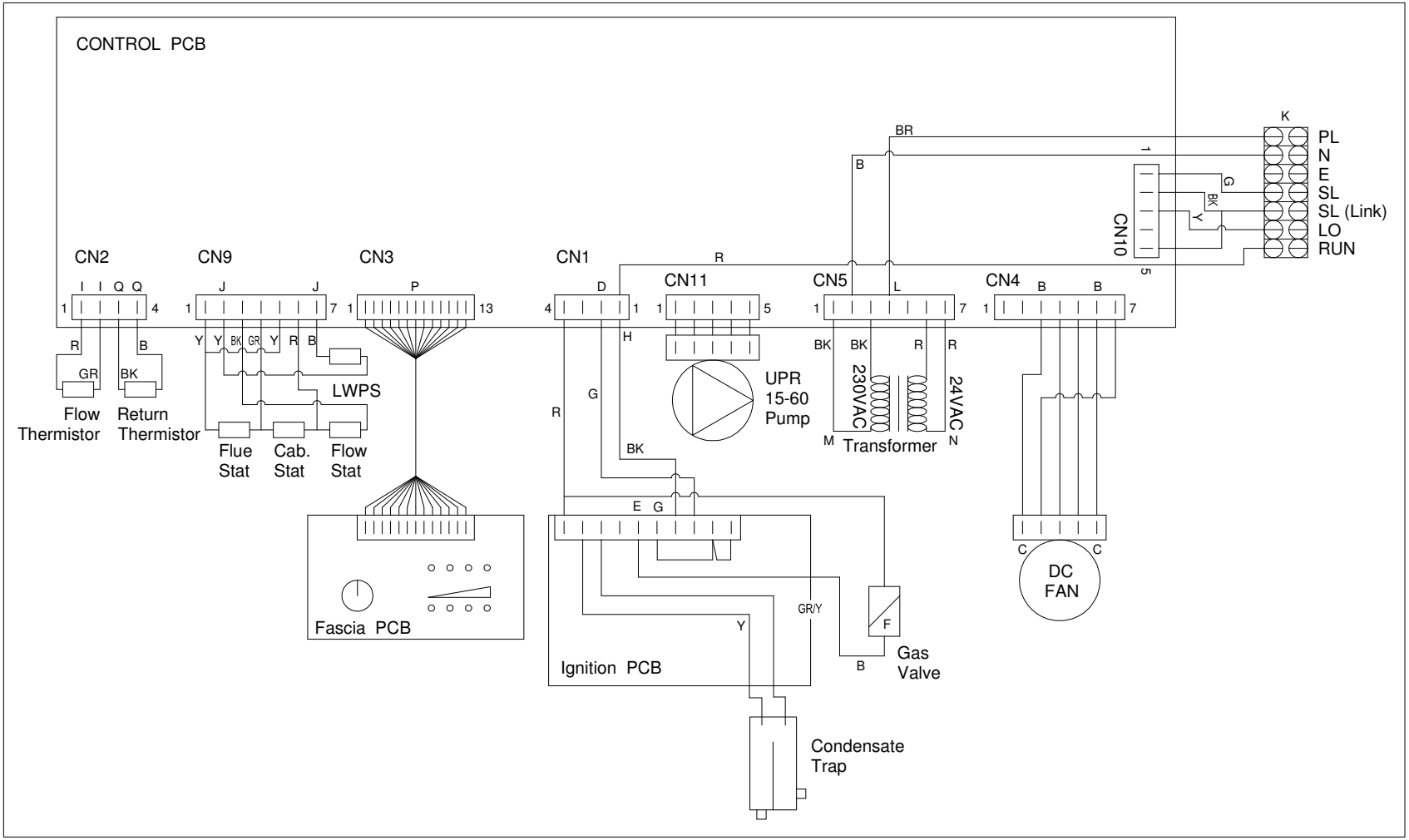

5.5 ELECTRICAL WIRING DIAGRAM

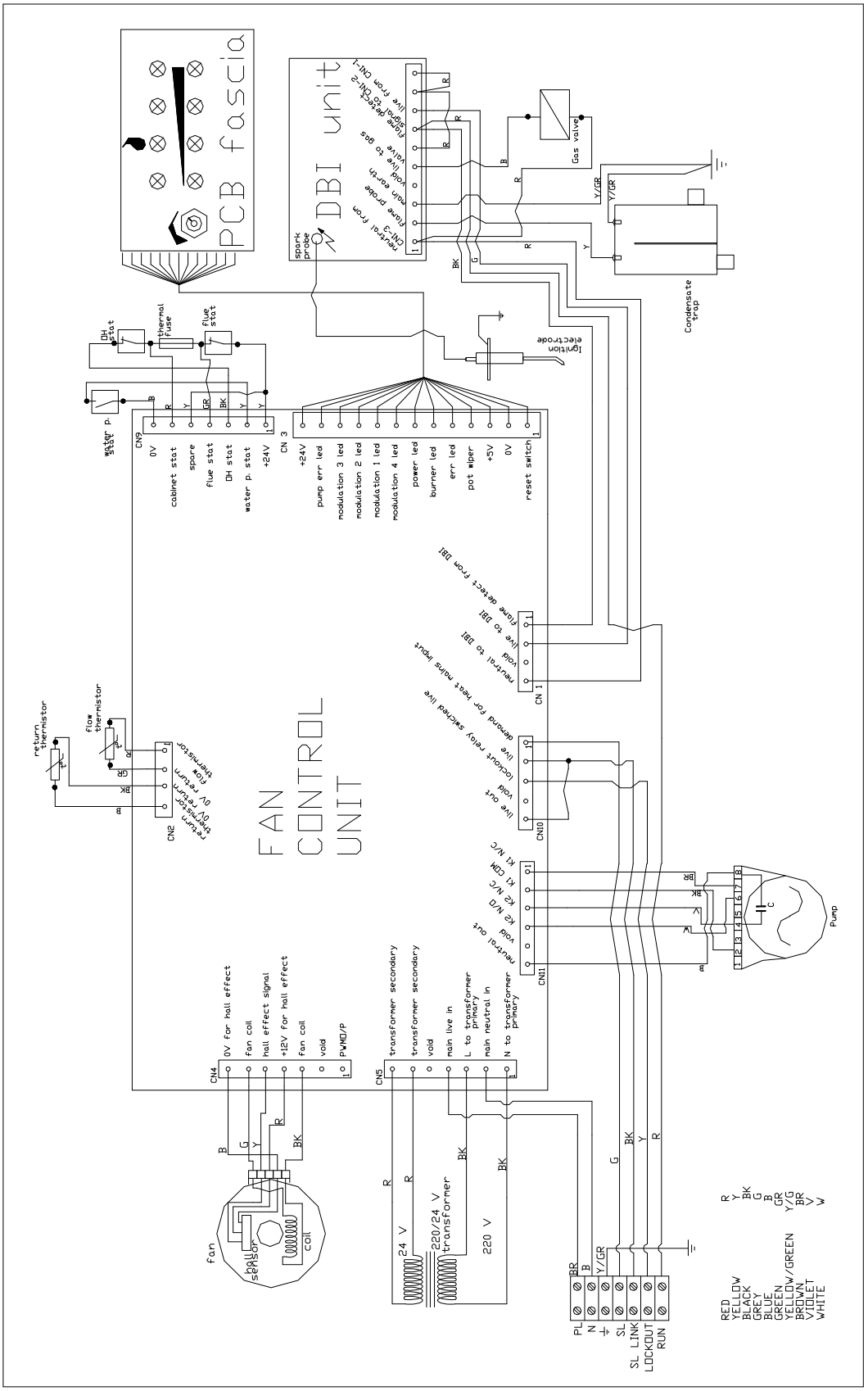

5.6 ILLUSTRATED WIRING DIAGRAM

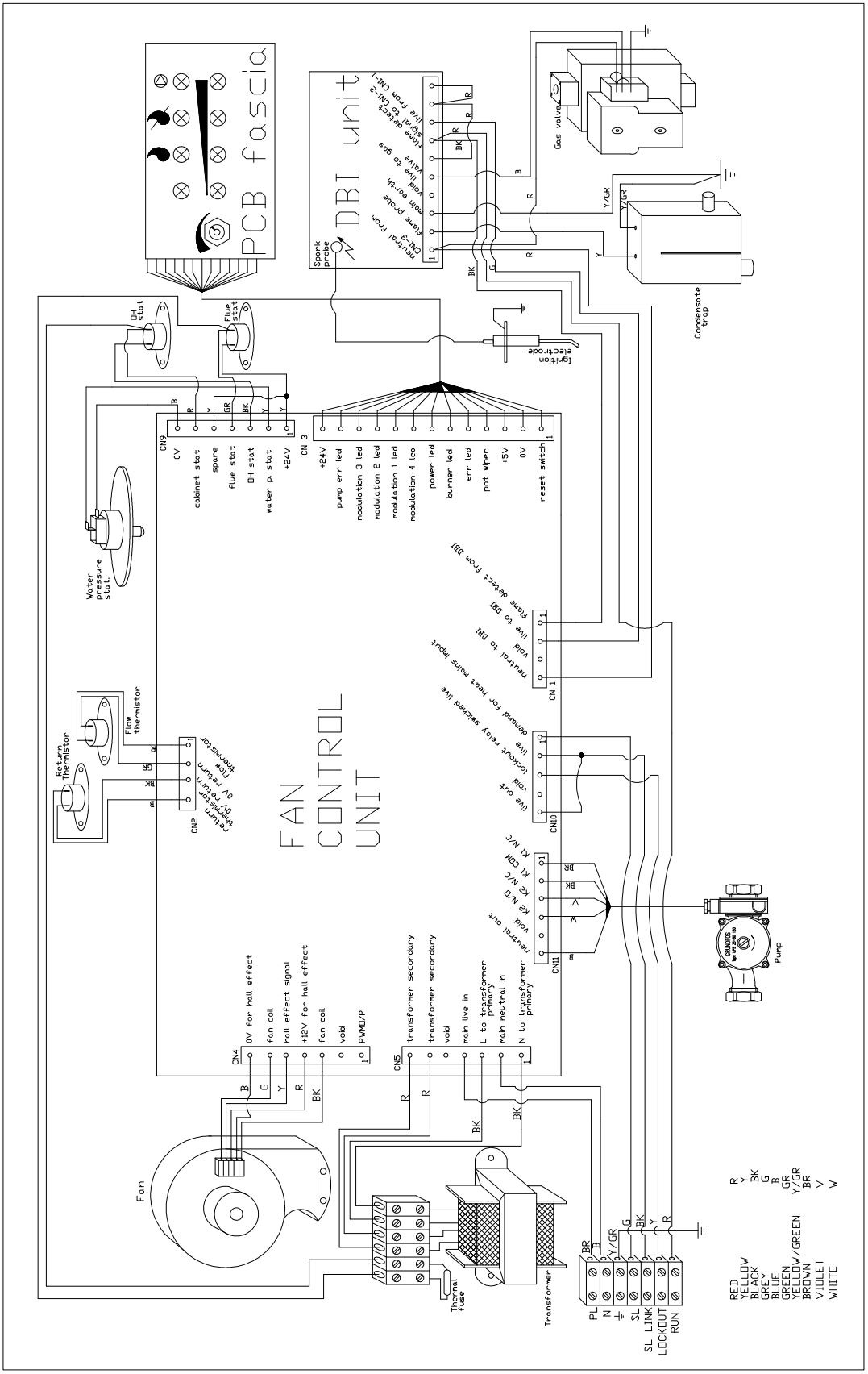

5.7 Exploded Assembly Diagrams

5.7.1 Boiler Controls Assembly

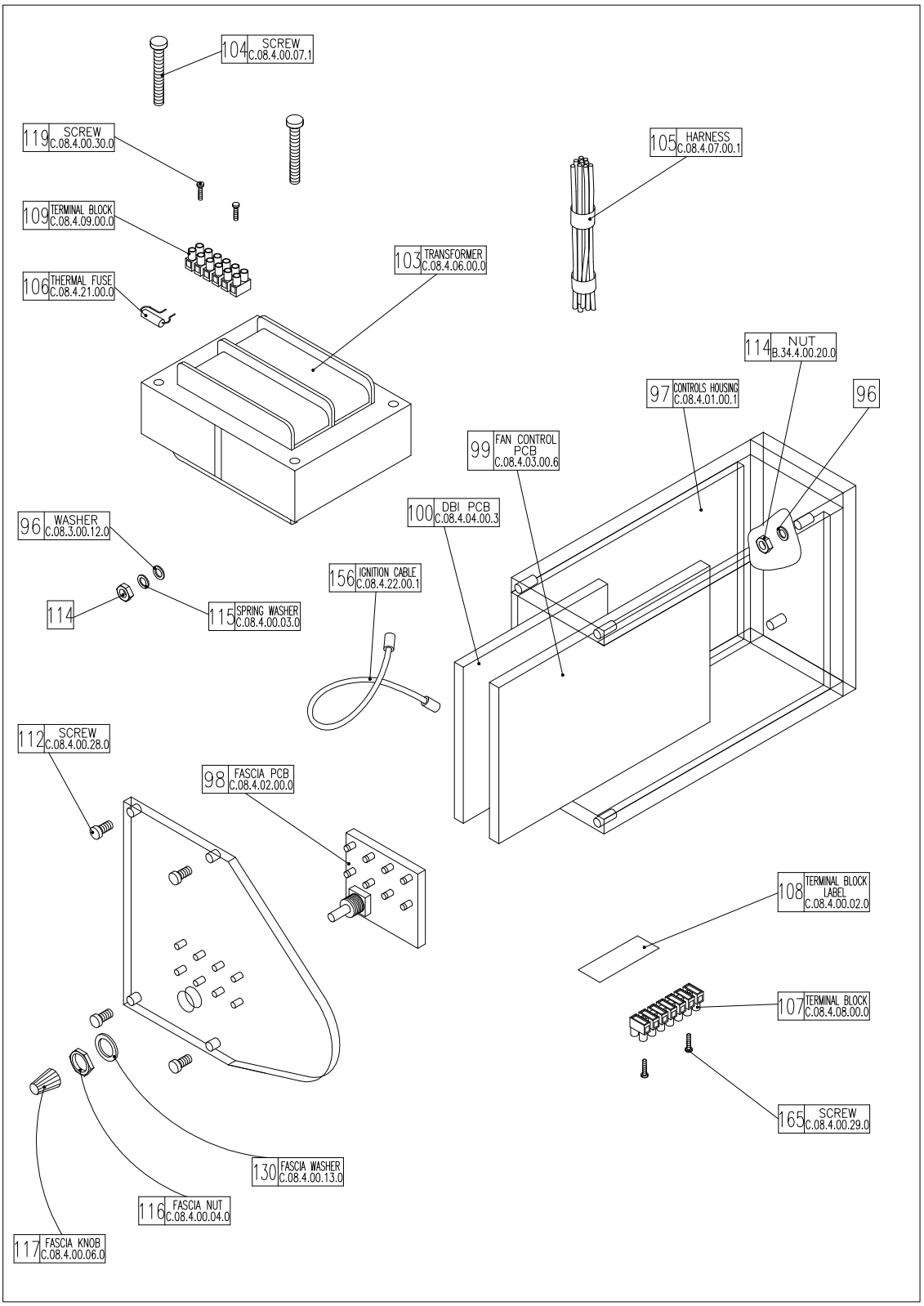

5.7.2 Waterway, Condensate & Flue Assembly

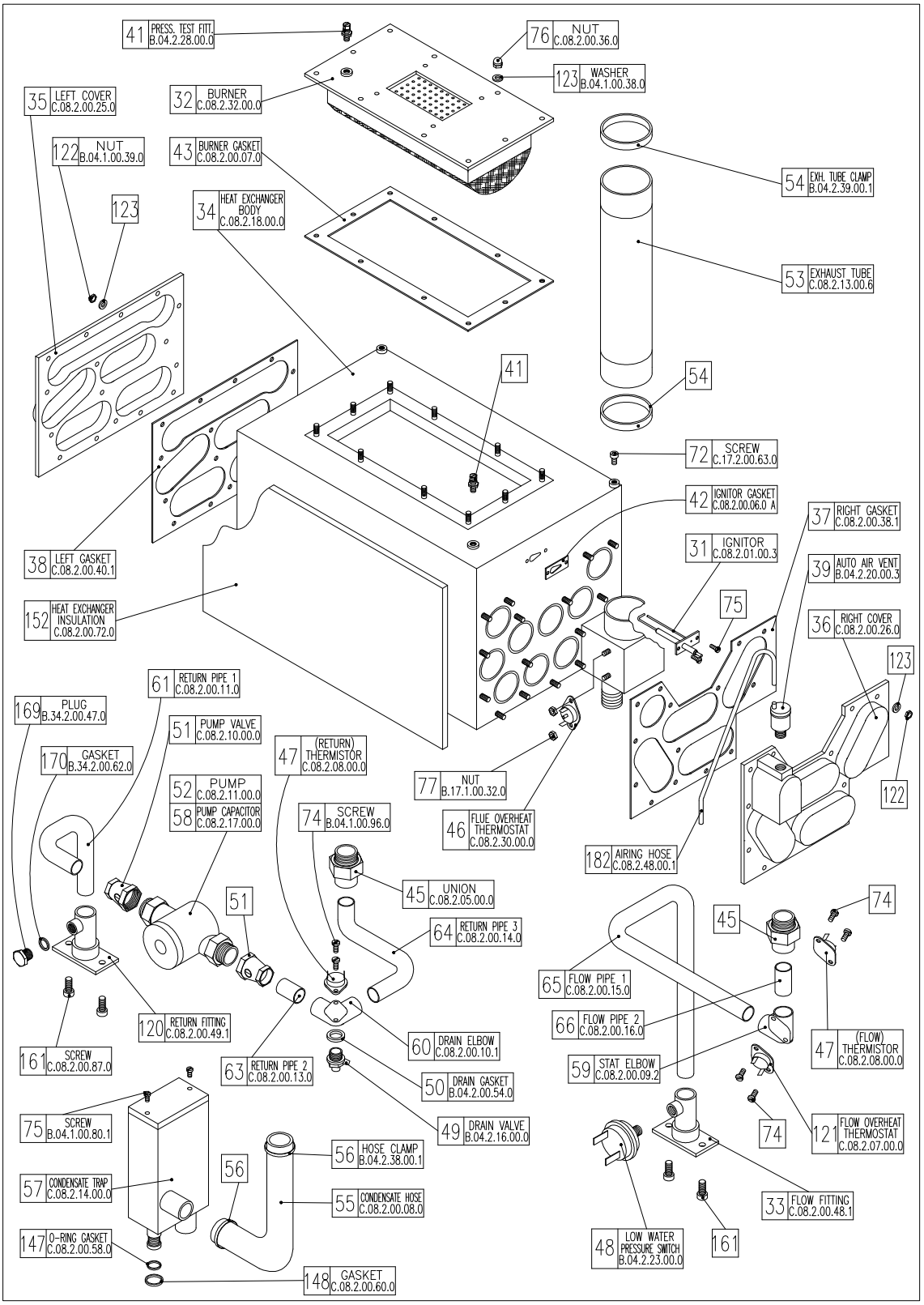

5.7.3 Air - Gas Assembly

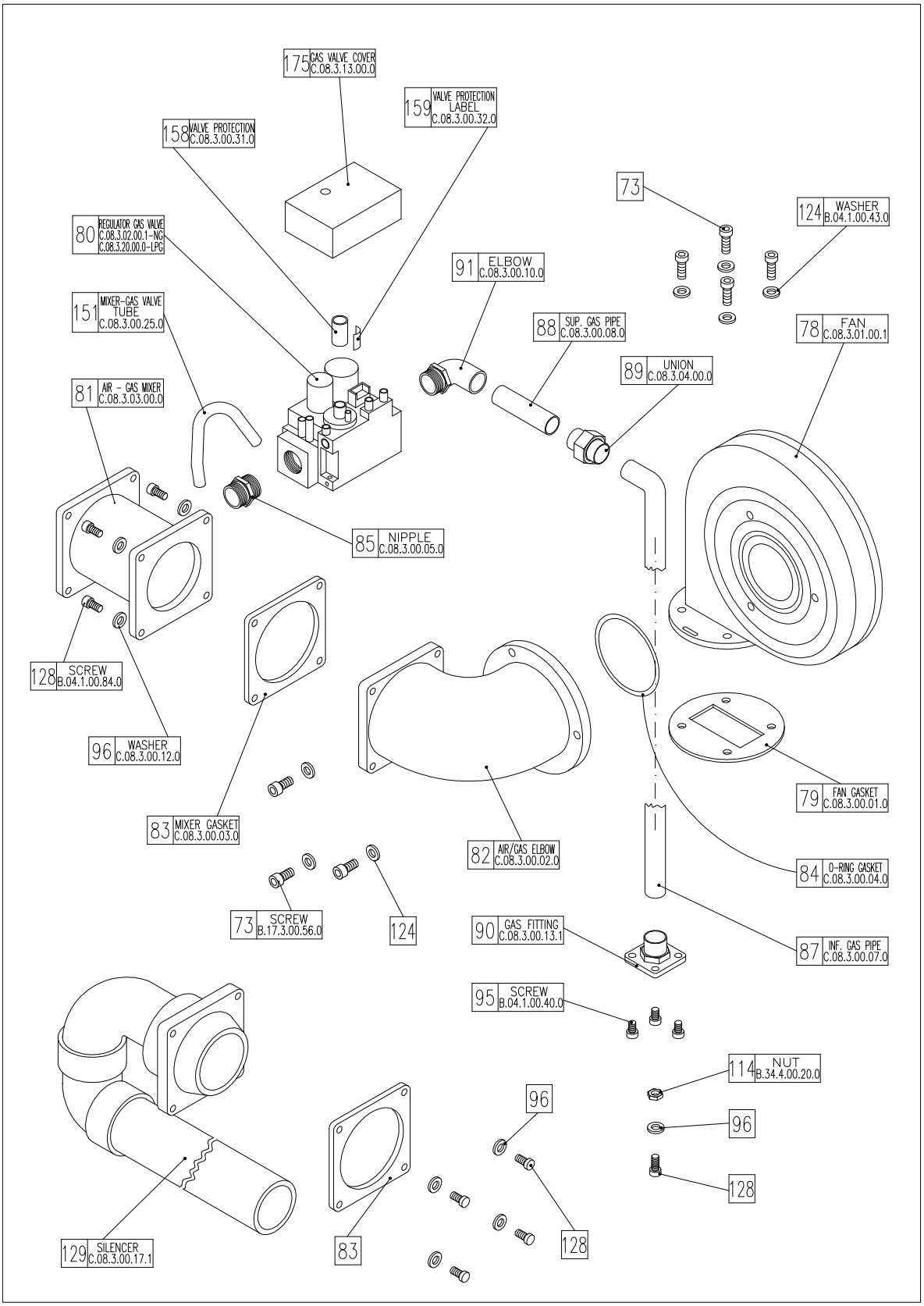

5.7.4 Casing Assembly

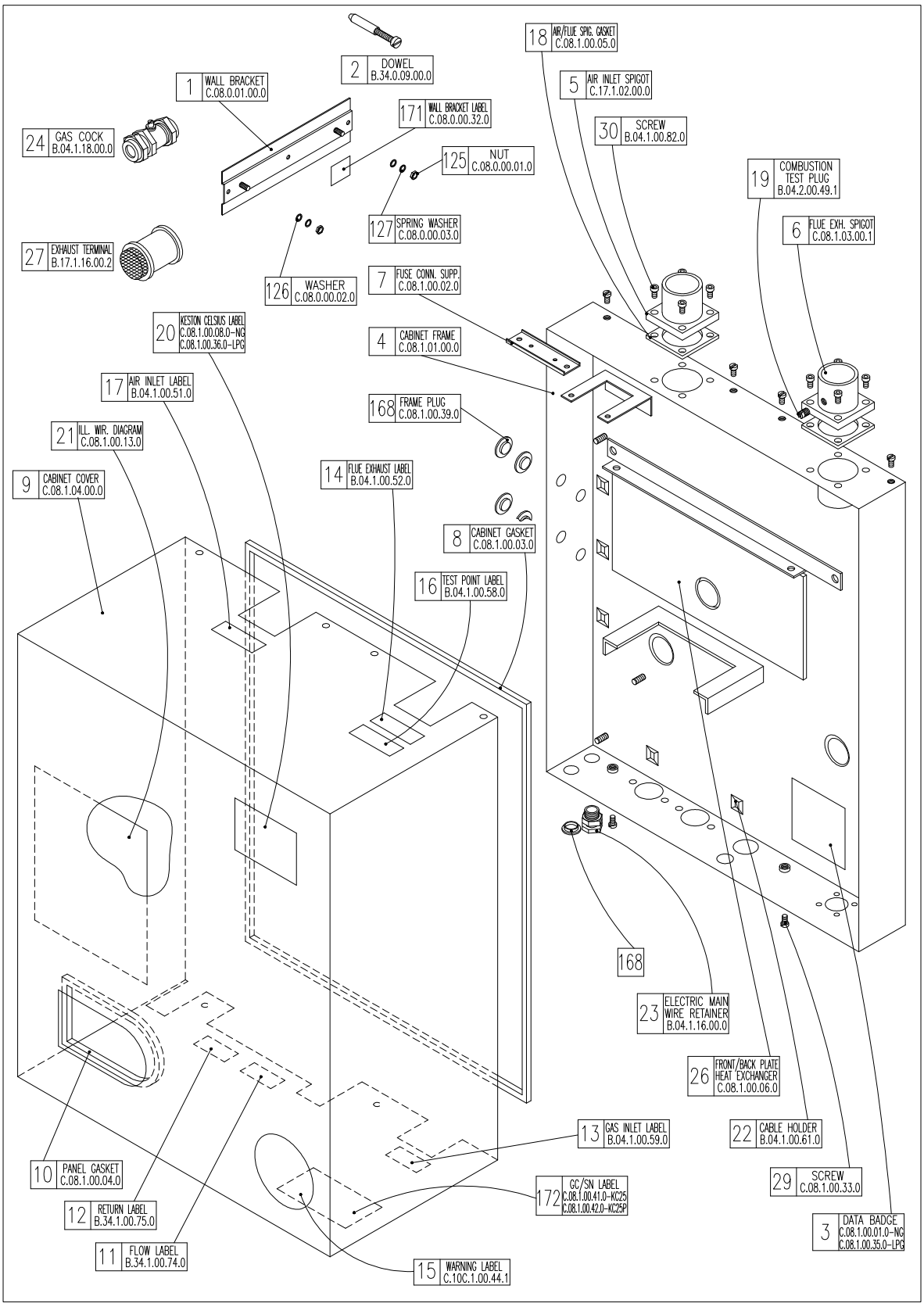

5.7.5 Exploded Diagrams Parts Reference List

Boiler Controls Assembly (Fig. 5.7.1)

GC Number	Code	Description
	100	Ignition PCB (C.08.4.04.00.3)
	99	Control PCB (C.08.4.03.00.6)
	98	Fascia PCB (C.08.4.02.00.0)
	107	Electrical Terminal Block(C.08.4.08.00.0)
	106	Cabinet Stat (C.08.4.21.00.0)

Waterway, Condensate & Flue Assembly (Fig. 5.7.2)

GC Number	Code	Description
	34	Heat Exchanger (C.08.2.18.00.0)
	32	Burner (C.08.2.32.00.0)
	43	Burner Head Gasket (C.08.2.00.07.0)
	42	Ignitor Gasket (C.08.2.00.06.0 A)
	31	Spark Ignition Electrode (C.08.2.01.00.3)
	57	Condensate Trap (C.08.2.14.00.0)
	47	Flow/Return Thermistor (C.08.2.08.00.0)
	46	Flue Overheat Stat (C.08.2.30.00.0)
	121	Flow Overheat Stat(C.08.2.07.00.0)
	48	Water Pressure Switch (C.08.2.23.00.0)
	52	Water Pump (C.08.2.11.00.0)

Air - Gas Assembly (Fig. 5.7.3)

GC Number	Code	Description
	78	Combustion Blower (C.08.3.01.00.1)
	80	KC25 Gas Valve (C.08.3.02.00.1)
	80	KC25P Gas Valve (C.08.3.20.00.0)
	81	Mixing Venturi (C.08.3.03.00.0)

Casing Assembly (Fig. 5.7.4)

GC Number	Code	Description
	9	Cabinet (C.08.1.04.00.0)
	3	Data Badge (C.08.1.00.01.0) - NG Data Badge (C.08.1.00.35.0) - LPG
	21	Ill. Wiring Diagram (C.08.1.00.13.0)
	19	Combustion Test Plug (B.04.2.00.49.1)

6. ROUTINE (ANNUAL) SERVICING

To ensure the continued safe and efficient operation of the boiler it is necessary to carry out routine servicing at regular intervals. The frequency of the servicing will depend upon the particular operating conditions, but it is recommended that an annual service should be carried out by a qualified engineer.

It is the law that any service work must be carried out by competent qualified persons.

NB: When servicing ensure that the gas and electrical supplies to the boiler are isolated before any work starts. It should be noted that turning the user control know fully anticlockwise to "Standby" does not isolate the electrical supply and parts of the boiler will remain live.
Hazardous materials are not used in the construction of the Celsius 25. However, due care should be taken when handling boiler components.
All joints should be checked for soundness after servicing and before firing the appliance.

After servicing complete the **Gas Boiler Commissioning Checklist - Service Interval Record (Chapter 9)**. **These forms (Chapter 9) should be kept in a safe place for the life of the boiler.**

6.1 Pre-Service Checks

It is recommended that an inspection should be carried out prior to shutting down the unit for servicing. Remove the front cover by removing the screws retaining the top and bottom. The following items should be observed:

a. Smooth starting and running of the blower.
b. Smooth lighting of the burner.
c. Check for leakage of gas, gas/air or combustion products.
d. Check for condensate leaks.
e. Check that the pump error LED (red) does not indicate high or low flow rate at any time during operation.
f. Check for water soundness.
g. Inspect the flue vent and air intake pipework. Joints must be sound and all pipework well bracketed.
h. Check that there is a steady fall back to the boiler from the flue pipe to allow condensate to run back into the boiler.
i. With the boiler operating at a low return temperature (i.e. less than 50°C) check that the condensate flows freely from the condensate line.

6.2 Recommended Routine Service

a. Remove the outer case by first removing the securing screws at the top and bottom of the appliance.
b. Remove the burner head (Section 7.6) and inspect the burner appearance. Black markings or other discoloration's on the gauze indicate too much gas or a lack of air possibly due to a blocked air inlet. Any breakage's or damage to the burner mesh indicate the burner must be replaced.
c. If necessary clean the burner with a mild household detergent and rinse under a hot running tap.
d. If necessary, from visual inspection, clean the heat exchanger using a suitable stiff plastic bristle brush, vacuum out any large particles and flush the heat exchanger with fresh water until the water flowing from the condensate drain is clear.
e. Remove the condensate trap (Section 7.8) and clean by flushing through with clean running water.
f. Check the electrode assembly mounted on the heat exchanger. If the point is damaged or burnt replace it.
Check that the spark gap measures 3 mm.
g. Replace the burner head, renewing the gasket if necessary, and reconnect the gas/air supply. Ensure the flanged gas/air supply joint is air tight.

h. Turn on the electrical supply to the boiler and allow the boiler to reach operating temperature levels.
i. Recheck the burner pressure by following the procedure detailed in Section 4.7
j. Remove the combustion test point plug from the flue pipe. This is situated on the flue spigot out of the cabinet.
k. **Carry the full procedure detailed in section 4.9 COMBUSTION TESTING - MANDATORY**
l. Replace the combustion test point plug.
m. Check all joints for soundness up to the gas burner.
n. Complete the **Gas Boiler Commissioning Checklist - Service Interval Record (Chapter 9)**.

7. REPLACEMENT OF PARTS

INDEX

7.0 GENERAL
7.1 PRECAUTIONS
7.2 ACCESS
7.3 PROCEDURES - GENERAL
7.4 ELECTRICAL
7.4.1 FASCIA PCB
7.4.2 BOILER FLOW & RETURN THERMISTORS
7.4.3 CABINET TEMPERATURE SENSOR
7.4.4 FLOW OVERHEAT THERMOSTAT & FLUE PROTECTION THERMOMSTAT
7.4.5 WATER PRESSURE SWITCH
7.4.6 IGNITION PCB
7.4.7 CONTROL PCB
7.4.8 COMBUSTION BLOWER
7.4.9 GAS CONTROL VALVE
7.5 SPARK IGNITION/FLAME DETECTION ELECTRODE
7.6 BURNER
7.7 HEAT EXCHANGER
7.8 CONDENSATE TRAP
7.9 PUMP

7.0 GENERAL

The following must always be carried out by a competent/qualified person.

7.1 PRECAUTIONS

i) Always switch off the mains electricity supply and disconnect the plug at the isolating switch and socket. (If a switch only is used then remove the fuse.)

ii) Gain access to the appliance (Section 7.2) and turn off the gas supply at the appliance service cock.

WARNING : Parts of the boiler internal wiring will remain live even after turning the User Control Knob to the Standby position. Shut off the power supply at the isolating switch before working on the appliance.

7.2 ACCESS

i) Remove the cabinet by removing the screws to the top and bottom of the cabinet.

ii) Access to the control, ignition and fascia PCB's of the control panel can be gained by removing the controls cover at the bottom left hand corner of the boiler. Remove the two sliding covers to the sides of the housing then gently pull the control panel forward of the PCB housing.

7.3 REPLACEMENT PROCEDURES

i) Always replace in the reverse order unless otherwise stated.

ii) Electrical connections must be remade in accordance with the Wiring Diagram (Section 5.5).

iii) Test the soundness of any gas carrying or water carrying joint broken during the service procedures.

7.4 ELECTRICAL COMPONENTS

7.4.1 Fascia PCB (Fig. 5.7.1 item 98)

i) Isolate the appliance (Section 7.1)

i) Gain access (Section 7.2)

iii) Remove the user control knob by fulling forward off the shaft.

iv) Undo and remove the locknut securing the fascia PCB to the front plate of the controls housing.

v) Disconnect the fascia PCB by unplugging the 13-way connection block.

vi) Reassemble (Section 7.3)

vii) Check for correct operation of the fascia PCB.

7.4.2 Boiler Flow and Return Thermistors (Fig. 5.7.2 item 47)

i) Isolate the appliance (Section 7.1)

ii) Gain access (Section 7.2)

iii) Remove the push on connectors from the thermistor taking note of the correct positions.

iv) Unscrew the two retaining screws and remove the thermistor.

v) Reassemble (Section 7.3)

NB: When fitting the new thermistor it is an advantage to smear a thin film of heat sink compound between the thermistor and plate. This, combined with fitting the new thermistor tightly to the plate, ensures a good contact.

7.4.3 Cabinet Temperature Sensor (Fig 5.7.1 item 106)

i) Isolate the appliance (Section 7.1)

ii) Gain access (Section 7.2)

iii) Remove the cabinet temperature sensor from the connector block by slackening the retaining screws.

iv) Reassemble (Section 7.3)

7.4.4 Flow Overheat Thermostat (Fig. 5.7.2 item 121) & Flue Protection Thermostat (Fig. 5.7.2 item 46)

i) Isolate the appliance (Section 7.1)

ii) Gain access (Section 7.2)

iii) Remove the push on connectors from the thermostat taking note of the correct positions.
iv) Unscrew the two retaining screws, or nuts, and remove the thermostat.
v) Reassemble (Section 7.3)
NB: When fitting the new thermostat it is an advantage to smear a thin film of heat sink compound between the thermostat and plate. This, combined with fitting the new thermostat tightly to the plate, ensures a good contact.

7.4.5 Water Pressure Switch (Fig. 5.7.2 item 48)
i) Isolate the appliance (Section 7.1)
ii) Shut off the water supply to the appliance.
iii) Gain access (Section 7.2)
iv) Drain the system to below the level of the appliance using the drain off tap at the base of the flow pipe from the heat exchanger.
v) Remove the push on connectors from the water pressure switch taking note of the correct positions.
vi) Unscrew the pressure switch.
vii) Reassemble (Section 7.3).
NB: Use a little jointing compound or PTFE tape on the thread.
viii) Refill the system (See Section 4 - Commissioning).

7.4.6 Ignition PCB (Fig. 5.7.1 item 100)
i) Isolate the appliance (Section 7.1)
ii) Gain access (Section 7.2)
iii) Remove the fascia plate by removing the four retaining screws (Fig 5.7.1 items 112) and pull forward leaving to one side.
iv) Remove the left hand side panel to the control boards housing by sliding forward.
v) Pull off the multi-pin connector and HT lead away from the board.
vi) Slide the ignition PCB from the PCB housing.
vii) Reassemble (Section 7.3)

7.4.7 Control PCB (Fig. 5.7.1 item 99)
i) Isolate the appliance (Section 7.1)
ii) Gain access (Section 7.2)
iii) Remove the fascia plate by removing the four retaining screws (Fig 5.7.1 items 112) and pull forward leaving to one side.
iv) Remove the right hand side panel to the control boards housing by sliding forward.
iv) Pull off the multi-pin connectors away from the board.
v) Slide the control PCB from the PCB housing.
vi) Reassemble (Section 7.3)

7.4.8 Combustion Blower (Fig. 5.7.3 item 78)
i) Isolate the appliance (Section 7.1)
ii) Gain access (Section 7.2)
iii) Disconnect the connector block from the combustion blower.
iv) Unscrew the bolts securing the venturi elbow (fig 5.7.3 item 82) to the inlet port of the combustion blower.
v) Remove the four bolts securing the combustion blower outlet flange to the burner and remove the combustion blower.
vi) Reassemble (Section 7.3)
NB: When reassembling inspect any gaskets for damage and replace if necessary.

7.4.9 Gas Control Valve (Fig. 5.7.3 item 80)
i) Isolate the appliance (Section 7.1)
ii) Gain access (Section 7.2)
iii) Remove the push on connector block to the gas valve.
iv) Remove the plastic air tube to the base of the gas valve.
v) Undo the union fitting (Fig 5.7.3 item 89) securing the gas inlet pipe to the gas control valve.

vi) Undo the four bolts fixing the mixing venturi (fig 5.7.3 item 81) to the venturi elbow (fig 5.7.3 item 82).
vii) Remove the gas valve and mixing venturi as one.
viii) Separate the mixing venturi from the gas valve by unscrewing the BSP nipple between the two.
ix) Reassemble (Section 7.3)
x) Check the gas rate (See Section 4 - Commissioning)

7.5 SPARK IGNITION/FLAME DETECTION ELECTRODE (Fig. 5.7.2 item 31)

i) Isolate the appliance (Section 7.1)
ii) Gain access (Section 7.2)
iii) Remove the fascia plate by removing the four retaining screws (Fig 5.7.1 items 112) and pull forward leaving to one side.
iv) Remove the left hand side panel to the control boards housing by sliding forward.
v) Remove the pull off HT lead to the ignition PCB (Fig 5.7.1 item 100).
vi) Remove the pull off HT lead to the spark ignition electrode.
vii) Undo the screws to the spark ignition electrode flange located on the heat exchanger side panel and withdraw the spark ignition electrode.
viii) Reassemble (Section 7.3)

NB: When reassembling inspect the gasket for damage and replace if necessary.
With the new spark ignition electrode in place it is essential to ensure the gap between the tip of the electrode and the earth post is 3 mm.
Distances above or below 3 mm will affect ignition performance. If necessary gently bend the electrode taking care not to damage the ceramic insulator.

7.6 BURNER (Fig. 5.7.2 items 32)

i) Isolate the appliance (Section 7.1)
ii) Gain access (Section 7.2)
iii) Remove the combustion blower (Section 7.4.9)
iv) Remove the 10 nuts fixing the burner to the top of the heat exchanger.
v) Withdraw the burner from the top of the heat exchanger.
vi) Reassemble (Section 7.3)

NB: When reassembling inspect any gaskets for damage and replace if necessary.

7.7 HEAT EXCHANGER (Fig. 5.7.2 item 34)

i) Isolate the appliance (Section 7.1)
ii) Gain access (Section 7.2)
iii) Shut of the water supply to the appliance.
iv) Remove the burner (Section 7.6)
v) Drain the system to below the level of the appliance using the drain off tap at the base of the boiler flow pipe.
vi) Remove the flue protection thermostat (Section 7.4.4)
vii) Remove the spark ignition/flame detection electrode (Section 7.5)
viii) Remove the flexible flue hose connection by slackening the retaining strap and pulling the hose of the heat exchanger spigot.
ix) Remove the condensate trap hose (Fig 5.7.2 item 55) by releasing the retaining clamp and pulling the hose away from the spigot at the base of the heat exchanger flue outlet box.
x) Disconnect the flow and return pipe unions (Fig 5.7.2 item 45) from the heat exchanger.
xi) Remove the two allen bolts fixing the heat exchanger to the top mounting bracket (Fig 5.7.2 item 72)
xii) Remove the heat exchanger
xiii) Reassemble (Section 7.3)
xiv) Recommission (Section 4 - Commissioning)

7.8 CONDENSATE TRAP (Fig. 5.7.2 item 57)

i) Isolate the appliance (Section 7.1)
ii) Gain access (Section 7.2)
iii) Disconnect the condensate line from the base of the heat exchanger.
iv) Disconnect the condense lines from the projection of the condensate trap from the base of the cabinet.
v) Withdraw the condensate trap.
vi) Mop up any spilled condensate.
vii) Reassemble (Section 7.3)

NB: When re-fitting the condensate trap pour water onto the condensate hose from the base of the heat exchanger until nearly full. Then reconnect the condensate hose to the base of the heat exchanger.

7.9 PUMP (Fig 5.7.2 item 52)

i) Isolate the appliance (Section 7.1)
ii) Gain Access (section 7.2)
iii) Isolate the waterways to the pump using the pump isolation valves (Fig 5.7.2 item 51)
iv) Disconnect the pump electrical cable from the connections box of the pump head taking note of the correct position.
v) Remove the four allen bolts securing the pump head to the pump back plate.
vi) Remove the pump head.
vii) If using a standard Grundfos UPS15-60 pump head as replacement
   a) Remove the electrical cover to the new pump head.
   b) Remove the capacitor and link wire in the 8-way terminal block in the new pump head and discard.
viii) Reassemble (Section 7.3)

8. SHORT SPARE PARTS LIST

Item	GC No	Part Denomination	Item	GC No	Part Denomination
32		Burner	43		Burner Gasket
		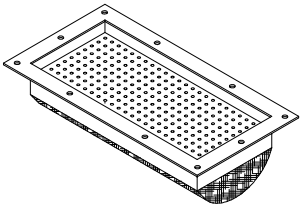			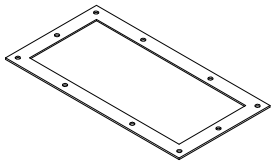
42		Ignitor Gasket	31		Ignitor/Sensor Probe
		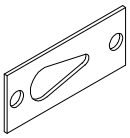			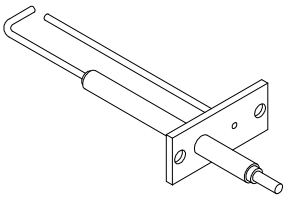
47		Flow/Return Thermistors	46		Flue Protection Thermostat
		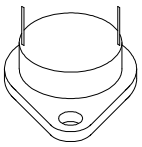			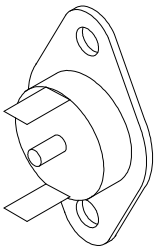
121		Flow Overheat Thermostat	80		KC25 Gas Valve KC25P Gas Valve
		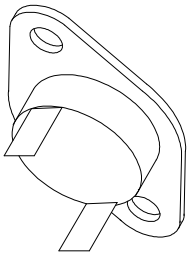			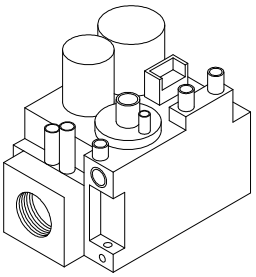

Item	GC No	Part Denomination	Item	GC No	Part Denomination
100		Ignition PCB	99		Control PCB

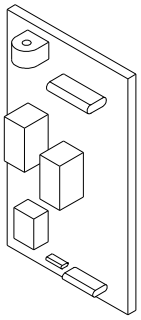

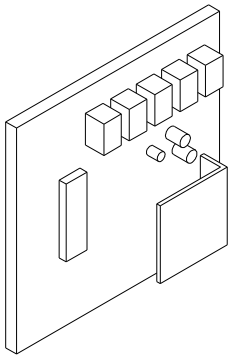

98		Fascia PCB			

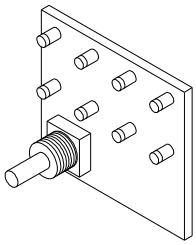

SHORT SPARE PARTS LIST FOR THE KESTON CONDENSING BOILER RANGE

Item	GC No	Part Denomination
47	-	Flow/Return Temperature Thermistor
48	-	Water Pressure Switch
121	-	Flow Overheat Thermostat
46	-	Flue Protection Thermostat
99	-	Control PCB
100	-	Ingition PCB
98	-	Fascia PCB
103	-	Transformer
78	-	Combustion Blower
80	-	KC25 Gas Valve (NG)
80	-	KC25P Gas Valve (LPG)
57	-	Condensate Trap
31	-	Ignition Electrode
32	-	Burner
34	-	Heat Exchanger
52	-	Circulating Pump

9. GAS BOILER COMMISSIONING CHECKLIST

BENCHMARK No. | | | | | | |

GAS BOILER COMMISSIONING CHECKLIST

BOILER SERIAL No. _____ ***NOTIFICATION No.*** _____

CONTROLS ***To comply with the Building Regulation, each section must have a tick in one or other of the boxes***

TIME & TEMPERATURE CONTROL TO HEATING	ROOM T/STAT & PROGRAMMER/TIMER ☐ ☐	PROGRAMMABLE ROOMSTAT ☐ ☐
TIME & TEMPERATURE CONTROL TO HOT WATER	CYLINDER T/STAT & PROGRAMMER/TIMER ☐ ☐	COMBI BOILER ☐ ☐
HEATING ZONE VALVES	FITTED ☐	NOT REQUIRED
HOT WATER ZONE VALVES	FITTED ☐	NOT REQUIRED ☐
THERMOSTATIC RADIATOR VALVES	FITTED	
AUTOMATIC BYPASS TO SYSTEM	FITTED	NOT REQUIRED

☐

FOR ALL BOILERS CONFIRM THE FOLLOWING

THE SYSTEM HAS BEEN FLUSHED IN ACCORDANCE WITH THE BOILER MANUFACTURER'S INSTRUCTIONS ?

THE SYSTEM CLEANER USED

THE INHIBITOR USED

☐ ☐

FOR THE CENTRAL HEATING MODE, MEASURE & RECORD

GAS RATE	m^3/hr	ft^3/hr
BURNER OPERATING PRESSURE (IF APPLICABLE)	N/A	mbar
CENTRAL HEATING FLOW TEMPERATURE		^{0}C
CENTRAL HEATING RETURN TEMPERATURE		^{0}C

☐ ☐

FOR COMBINATION BOILERS ONLY

HAS A WATER SCALE REDUCER BEEN FITTED ? YES NO

WHAT TYPE OF SCALE REDUCER HAS BEEN FITTED ? ☐ ☐

FOR THE DOMESTIC HOT WATER MODE, MEASURE & RECORD

GAS RATE	m^3/hr	ft^3/hr
MAXIMUM BURNER OPERATING PRESSURE (IF APPLICABLE)	N/A	mbar
COLD WATER INLET TEMPERATURE		^{0}C
HOT WATER OUTLET TEMPERATURE		^{0}C
WATER FLOW RATE		lts/min ☐

FOR CONDENSING BOILERS ONLY CONFIRM THE FOLLOWING

THE CONDENSATE DRAIN HAS BEEN INSTALLED IN ACCORDANCE WITH THE MANUFACTURER'S INSTRUCTIONS ? YES ☐

FOR ALL INSTALLATIONS CONFIRM THE FOLLOWING

☐

THE HEATING AND HOT WATER SYSTEM COMPLIES WITH CURRENT BUIDING REGULATIONS ☐ ☐

THE APPLIANCE AND ASSOCIATED EQUIPMENT HAS BEEN INSTALLED AND COMISSIONED IN ACCORDANCE WITH THE MANUFACTURER'S INSTRUCTIONS ☐ ☐

IF REQUIRED BY THE MANUFACTURER, HAVE YOU RECORDE A CO/CO_2 RATIO READING? N/A YES CO/CO_2 RATIO

THE OPERATION OF THE APPLIANCE AND SYSTEM CONTROLS HAVE BEEN DEMONSTRATED TO THE CUSTOMER

SERVICE INTERVAL RECORD

It is recommended that your heating system is serviced regularly
and that you complete the appropriate Service Interval Record Below

Service Provider. Before completing the appropriate Service Interval Record below, please ensure you have carried out the service as described in the boiler manufacturer's instructions. Always use the manufacturer's specified spare part when replacing all controls

SERVICE 1 DATE
ENGINEER NAME
COMPANY NAME
TEL No.
CORGI ID CARD SERIAL No.
COMMENTS

SIGNATURE

SERVICE 2 DATE
ENGINEER NAME
COMPANY NAME
TEL No.
CORGI ID CARD SERIAL No.
COMMENTS

SIGNATURE

SERVICE 3 DATE
ENGINEER NAME
COMPANY NAME
TEL No.
CORGI ID CARD SERIAL No.
COMMENTS

SIGNATURE

SERVICE 4 DATE
ENGINEER NAME
COMPANY NAME
TEL No.
CORGI ID CARD SERIAL No.
COMMENTS

SIGNATURE

SERVICE 5 DATE
ENGINEER NAME
COMPANY NAME
TEL No.
CORGI ID CARD SERIAL No.
COMMENTS

SIGNATURE

SERVICE 6 DATE
ENGINEER NAME
COMPANY NAME
TEL No.
CORGI ID CARD SERIAL No.
COMMENTS

SIGNATURE

SERVICE 7 DATE
ENGINEER NAME
COMPANY NAME
TEL No.
CORGI ID CARD SERIAL No.
COMMENTS

SIGNATURE

SERVICE 8 DATE
ENGINEER NAME
COMPANY NAME
TEL No.
CORGI ID CARD SERIAL No.
COMMENTS

SIGNATURE

SERVICE 9 DATE
ENGINEER NAME
COMPANY NAME
TEL No.
CORGI ID CARD SERIAL No.
COMMENTS

SIGNATURE

SERVICE 10 DATE
ENGINEER NAME
COMPANY NAME
TEL No.
CORGI ID CARD SERIAL No.
COMMENTS

SIGNATURE

10. HIGH & LOW COMBUSTION SETTING PROCEDURE

It is important that the combustion at both high and low fire is checked and set when conducting any work on the combustion circuit, especially gas valve replacement.
The procedure below details this setting using an electronic means of locking the boiler on high or low fire rate. Where the instruction requires that the electrical supply to the appliance is isolated, correct isolation procedures shall be followed. Always verify safe electrical isolation before working on an appliance.

1. Electrically isolate the appliance, verify that the electrical supply has been isolated then removethe appliance case by first removing the securing screws at the top and bottom of the appliance.

2. Once the casing has been removed keeping your hands away from exposed electrical components and connections, switch the electrial power supply to the appliance back on.
Prior to commencing the adjustment procedure, the boiler should be brought up to the normal working temperature, a gas working pressure of at least 18mbar should be present at the gas inlet test nipple (see Figure 1) and the thin neoprene plastic pipe between the venturi and gas valve should be in place/sound.

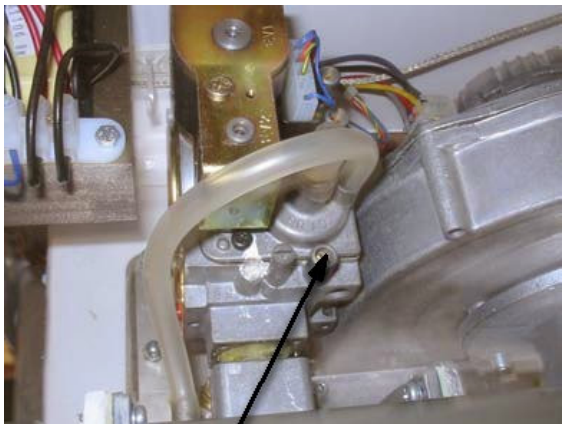

Gas Inlet PTN
Figure 1 - Gas Inlet PTN

3. Turn off the boiler via the fascia control knob and electrically isolate the boiler. Verify that the electrical supply has been isolated.

4. The facia panel containing the on/off knob should be removed via the four retaining screws. Fascia PCB should have the electrical lead still connected and the knob left to the off position.

5. Please be aware that some of the C25 boilers are fitted with a plastic translucent moisture cover over the top of the gas valve, this cover is held in place by a Phillips screw on the gas valve. Prior to adjustment this shield should be removed.

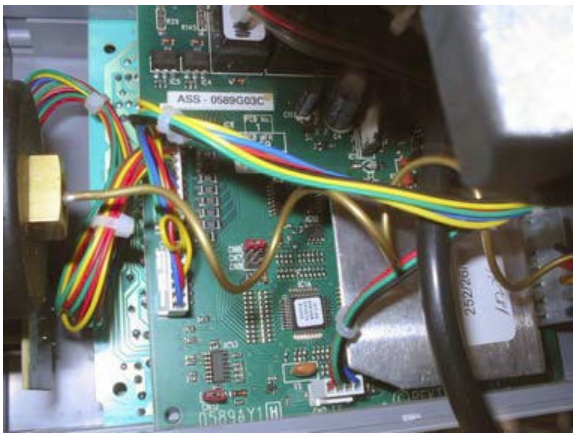

Figure 2 - PCB Fan Speed Jumper

6. On the right hand board as you look at the boiler face on, you will locate a small electrical bridging jumper attached to the board. The jumper is red in colour, approx 18mm in from the front edge and 12mm up from the bottom edge of the board (see Figure 2).

7. **Please note : The following procedure shall only be carried out by a trained and competent operative.** As the adjustment of the gas valve high and low fire adjustment screw must the indertaken with the appliance running, precautions should be taken to avoid contact with any exposed electrical components and connections.

To set the high fire adjustment you will need to lock the boiler in this mode. To achieve this you need to remove the jumper from the board. Then, with the jumper removed, restore power to the boiler. Keeping your hands out of the appliance whilst the electrical supply is on, turn the boiler on and off using the facia control knob. On each operation of the knob to on then off, will result in the illumination of one of the four lower green LEDs in succession. High fire is denoted when the third lower green LED is illuminated. At this point electrically isolate the boiler, verify electrical isolation and then fit the jumper back in its original position, restore power to the boiler and turn the boiler on using the control knob. The boiler should go through its start up procedure and lock itself on high fire with all four LEDs illuminated. The flue gas composition can now be tested via the flue spiggot test point. A reading of 8.5% to 9% CO_2 for natural gas (G20) boilers should be present, or 9.5% to 10% CO_2 for LPG (G31). If the CO_2 is not found to be within this range, the gas valve high fire adjustment screw should be turned to achieve this figure. This screw can be identified from this manual, page 20, item number 8; in addition this screw is identified by the use of tamper paint on the screw head.

8. After the high fire adjustment has been made/checked, isolate the electrical supply to the boiler, verify safe isolation and remove the fan speed jumper again. Restore the electrical supply to the boiler and then turn the boiler on and off using the fascia control knob. Low fire position is confirmed when the second green LED is illuminated, isolate the electrical supply, verify safe isolation and re-fit the fan speed jumper. Restore the electrical supply and turn the boiler on via the fascia control knob. At this point the boiler will fire up with just the first LED on. The low fire flue gas reading should be 8% to 8.5% CO_2 for natural gas or 8.9% to 9.3% CO_2 for lpg. **DO NOT ADJUST ANY ADJUSTMENT SCREW.**

9. After the high then low fire adjustment has been made, then the boiler must be returned to modulation operation. Isolate the electrical supply, verify safe isolation and remove the fan speed jumper. Restore the electrical supply to the boiler and then turn the boiler on and off using the fascia control knob until there are no lower LEDs illuminated. Isolate the electrical supply, verify safe isolation and refit the jumper to the board, refit boiler facia and case.
Restore the electrical supply to the boiler and hand over to the user.

If following the above procedure, combustion levels described above at both high and low rate could not be obtained, please turn off the appliance and isolate the gas to the appliance. Telephone KESTON BOILERS technical support (phone no. 0208 462 0262)

KESTON CONDENSING BOILERS
IMPORTANT
CELSIUS 25 & 25P
INSTALLATION KEY POINTS

- ☑ *Read Installation Manual Carefully*
- ☑ *Ensure that there is at least 9 feet head of water pressure at the top of the boiler and an open bypass across primary flow and return (for open vented systems).*
- ☑ *Ensure that ALL dust particles, filings , plastic chips etc. are removed from the inlet pipe.*
- ☑ *If the installation is a replacement the system must be flushed clean. System should be drained hot, then refilled, then drained again until the water is clean.*
- ☑ *Ensure that there is a proper electrical supply ie 230V fused at 3A for the permanent live and that the factory link between SL and SL(link) has been removed..*
- ☑ *Take great care with pipe connections to ensure that no damage is done to the internal pipework.*
- ☑ *Ensure that the 22mm condensate pipe is not exposed to freezing conditions.*
- ☑ *Make sure that the exhaust pipe terminates away from windows or vents and is out of reach.*
- ☑ *Make sure that the air inlet and exhaust pipe outlets are at least 200mm apart.*
- ☑ *Check tightness of all connections in the boiler before firing.*
- ☑ *Ensure that the terminals supplied are fitted to both the exhaust and air inlet pipes.*
- ☑ *The system must be free from air before firing.*
- ☑ *If TRV's are installed on radiators ensure that a bypass is installed to maintain required flow.*
- ☑ *Complete the **Gas Boiler Commissioning Checklist - Service Interval Record (Chapter 9)**.*
- ☑ *Complete the combustion testing (Section 4.9) using a calibrated flue gas analyser.*

KESTON
Celsius 25

LPG CONVERSION INSTRUCTIONS FOR KESTON CELSIUS 25 MODEL

The Keston Condensing Boiler CELSIUS 25 is supplied fabricated for Natural Gas combustion at a supply pressure of 20 mbar.

These conversion instructions must be read in conjunction with the **Keston Condensing Boiler Installation & Servicing Instructions - WD209.**

To convert to LPG (Commercial Propane) you must carry out the following sequence:

i) Isolate the appliance (Section 7.1)
ii) Gain access (Section 7.2)
iii) Replace the NG gas valve (part number C.08.3.02.00.1) with the LPG gas valve (part number C.08.3.20.00.0) according to Section 7.4.9.
Iv) Check the gas rate and combustion – **MANDATORY**

It is important that the combustion at both high and low fire is checked and set when conducting any work on the combustion circuit, especially gas valve replacement.
The procedure below details this setting using an electronic means of locking the boiler on high or low fire rate. Where the instruction requires that the electrical supply to the appliance is isolated, correct isolation procedures shall be followed. Always verify safe electrical isolation before working on an appliance.

1. Electrically isolate the appliance, verify that the electrical supply has been isolated then removethe appliance case by first removing the securing screws at the top and bottom of the appliance.

2. Once the casing has been removed keeping your hands away from exposed electrical components and connections, switch the electrial power supply to the appliance back on. Prior to commencing the adjustment procedure, the boiler should be brought up to the normal working temperature, a gas working pressure of at least 18mbar should be present at the gas inlet test nipple (see Figure 1) and the thin neoprene plastic pipe between the venturi and gas valve should be in place/sound.

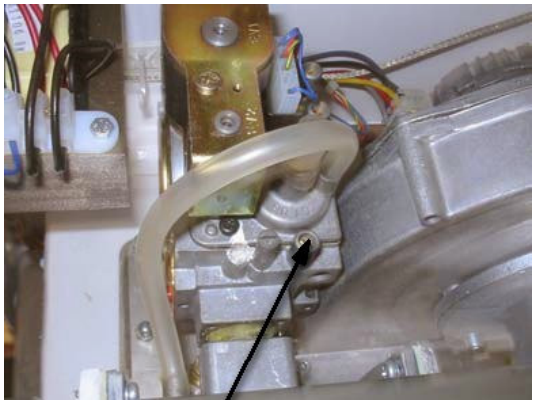

Figure 1 - Gas Inlet PTN

3. Turn off the boiler via the fascia control knob and electrically isolate the boiler. Verify that the electrical supply has been isolated.

4. The facia panel containing the on/off knob should be removed via the four retaining screws. Fascia PCB should have the electrical lead still connected and the knob left to the off position.

5. Please be aware that some of the KC25 boilers are fitted with a plastic translucent cover is held in place by a Phillips screw on the gas valve. Prior to adjustment this shield should be removed.

6. On the right hand board as you look at the boiler face on, you will locate a small electrical bridging jumper attached to the board. The jumper is red in colour, approx 18mm in from the front edge and 12mm up from the bottom edge of the board (see Figure 2).

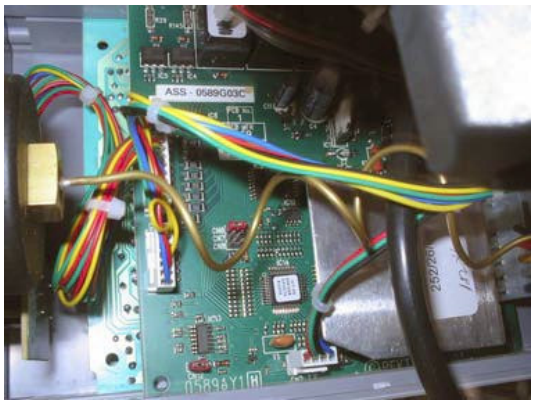

Figure 2 - PCB Fan Speed Jumper

7. **Please note : The following procedure shall only be carried out by a trained and competent operative.** As the adjustment of the gas valve high and low fire adjustment screw must the indertaken with the appliance running, precautions should be taken to avoid contact with any exposed electrical components and connections.

To set the high fire adjustment you will need to lock the boiler in this mode. To achieve this you need to remove the jumper from the board. Then, with the jumper removed, restore power to the boiler. Keeping your hands out of the appliance whilst the electrical supply is on, turn the boiler on and off using the facia control knob. On each operation of the knob to on then off, will result in the illumination of one of the four lower green LEDs in succession. High fire is denoted when the third lower green LED is illuminated. At this point electrically isolate the boiler, verify electrical isolation and then fit the jumper back in its original position, restore power to the boiler and turn the boiler on using the control knob. The boiler should go through its start up procedure and lock itself on high fire with all four LEDs illuminated. The flue gas composition can now be tested via the flue spiggot test point. A reading of 9.5% to 10% CO_2 (G31) should be present. If the CO_2 is not found to be within this range, the gas valve high fire adjustment screw should be turned to achieve this figure. This screw can be identified from this manual, page 20, item number 8; in addition this screw is identified by the use of tamper paint on the screw head.

8. After the high fire adjustment has been made/checked, isolate the electrical supply to the boiler, verify safe isolation and remove the fan speed jumper again. Restore the electrical supply to the boiler and then turn the boiler on and off using the fascia control knob. Low fire position is confirmed when the second green LED is illuminated, isolate the electrical supply, verify safe isolation and re-fit the fan speed jumper. Restore the electrical supply and turn the boiler on via the fascia control knob. At this point the boiler will fire up with just the first LED on. The low fire flue gas reading should be 8.9% to 9.3% CO_2. **DO NOT ADJUST ANY ADJUSTMENT SCREW.**

9. After the high then low fire adjustment has been made, then the boiler must be returned to modulation operation. Isolate the electrical supply, verify safe isolation and remove the fan speed jumper. Restore the electrical supply to the boiler and then turn the boiler on and off using the fascia control knob until there are no lower LEDs illuminated. Isolate the electrical supply, verify safe isolation and refit the jumper to the board, refit boiler facia and case. Restore the electrical supply to the boiler and hand over to the user.

If following the above procedure, combustion levels described above at both high and low rate could not be obtained, please turn off the appliance and isolate the gas to the appliance. Telephone KESTON BOILERS technical support (phone no. 0208 462 0262)

v) Note the original appliance serial number and production date on the old data badge.
vi) Stick the new KC25P databadge C.08.1.00.35.0 (Fig. 5.7.4 item 3) into the appliance over the old data badge.
vii) Indelibly mark the appliance serial number and production date on the new data badge.
viii) Reassemble (Section 7.3)

Keston Condensing Boilers LPG Specifications

Supply pressure:

High	45 mbar
Normal	37 mbar
Low	25 mbar

KESTON
Celsius 25

NG CONVERSION INSTRUCTIONS FOR KESTON CELSIUS 25P MODEL

The Keston Condensing Boiler CELSIUS 25P is supplied fabricated for LP Gas combustion at a supply pressure of 37 mbar.

These conversion instructions must be read in conjunction with the **Keston Condensing Boiler Installation & Servicing Instructions - WD209.**

To convert to NG (Natural Gas) you must carry out the following sequence:

i) Isolate the appliance (Section 7.1)
ii) Gain access (Section 7.2)
iii) Replace the LPG gas valve (part number C.08.3.20.00.0) with the NG gas valve (part number C.08.3.02.00.1) according to Section 7.4.9.
Iv) Check the gas rate and combustion – **MANDATORY**

It is important that the combustion at both high and low fire is checked and set when conducting any work on the combustion circuit, especially gas valve replacement.
The procedure below details this setting using an electronic means of locking the boiler on high or low fire rate. Where the instruction requires that the electrical supply to the appliance is isolated, correct isolation procedures shall be followed. Always verify safe electrical isolation before working on an appliance.

1. Electrically isolate the appliance, verify that the electrical supply has been isolated then removethe appliance case by first removing the securing screws at the top and bottom of the appliance.

2. Once the casing has been removed keeping your hands away from exposed electrical components and connections, switch the electrial power supply to the appliance back on. Prior to commencing the adjustment procedure, the boiler should be brought up to the normal working temperature, a gas working pressure of at least 18mbar should be present at the gas inlet test nipple (see Figure 1) and the thin neoprene plastic pipe between the venturi and gas valve should be in place/sound.

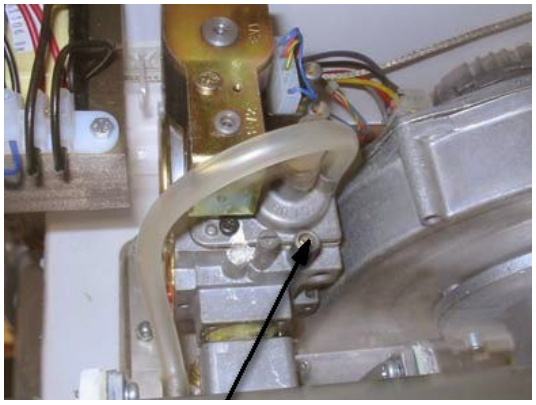

Figure 1 - Gas Inlet PTN

3. Turn off the boiler via the fascia control knob and electrically isolate the boiler. Verify that the electrical supply has been isolated.

4. The facia panel containing the on/off knob should be removed via the four retaining screws. Fascia PCB should have the electrical lead still connected and the knob left to the off position.

5. Please be aware that some of the KC25 boilers are fitted with a plastic translucent moisture cover over the top of the gas valve, this cover is held in place by a Phillips screw on the gas valve. Prior to adjustment this shield should be removed.

6. On the right hand board as you look at the boiler face on, you will locate a small electrical bridging jumper attached to the board. The jumper is red in colour, approx 18mm in from the front edge and 12mm up from the bottom edge of the board (see Figure 2).

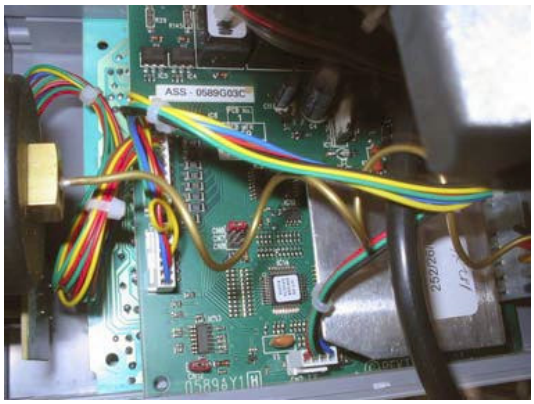

Figure 2 - PCB Fan Speed Jumper

7. **Please note : The following procedure shall only be carried out by a trained and competent operative.** As the adjustment of the gas valve high and low fire adjustment screw must the indertaken with the appliance running, precautions should be taken to avoid contact with any exposed electrical components and connections.

To set the high fire adjustment you will need to lock the boiler in this mode. To achieve this you need to remove the jumper from the board. Then, with the jumper removed, restore power to the boiler. Keeping your hands out of the appliance whilst the electrical supply is on, turn the boiler on and off using the facia control knob. On each operation of the knob to on then off, will result in the illumination of one of the four lower green LEDs in succession. High fire is denoted when the third lower green LED is illuminated. At this point electrically isolate the boiler, verify electrical isolation and then fit the jumper back in its original position, restore power to the boiler and turn the boiler on using the control knob. The boiler should go through its start up procedure and lock itself on high fire with all four LEDs illuminated. The flue gas composition can now be tested via the flue spiggot test point. A reading of 8.5% to 9% CO_2 (G20) should be present. If the CO_2 is not found to be within this range, the gas valve high fire adjustment screw should be turned to achieve this figure. This screw can be identified from this manual, page 20, item number 8; in addition this screw is identified by the use of tamper paint on the screw head.

8. After the high fire adjustment has been made/checked, isolate the electrical supply to the boiler, verify safe isolation and remove the fan speed jumper again. Restore the electrical supply to the boiler and then turn the boiler on and off using the fascia control knob. Low fire position is confirmed when the second green LED is illuminated, isolate the electrical supply, verify safe isolation and re-fit the fan speed jumper. Restore the electrical supply and turn the boiler on via the fascia control knob. At this point the boiler will fire up with just the first LED on. The low fire flue gas reading should be 8% to 8.5% CO_2 (G20). **DO NOT ADJUST ANY ADJUSTMENT SCREW.**

9. After the high then low fire adjustment has been made, then the boiler must be returned to modulation operation. Isolate the electrical supply, verify safe isolation and remove the fan speed jumper. Restore the electrical supply to the boiler and then turn the boiler on and off using the fascia control knob until there are no lower LEDs illuminated. Isolate the electrical supply, verify safe isolation and refit the jumper to the board, refit boiler facia and case. Restore the electrical supply to the boiler and hand over to the user.

If following the above procedure, combustion levels described above at both high and low rate could not be obtained, please turn off the appliance and isolate the gas to the appliance. Telephone KESTON BOILERS technical support (phone no. 0208 462 0262)

v) Note the original appliance serial number and production date on the old data badge.
vi) Stick the new KC25 databadge C.08.1.00.01.0 (Fig. 5.7.4 item 3) into the appliance over the old data badge.
vii) Indelibly mark the appliance serial number and production date on the new data badge.
viii) Reassemble (Section 7.3)

Keston Condensing Boilers NG Specifications

Supply pressure:

High	25 mbar
Normal	20 mbar
Low	17 mbar

KESTON

CELSIUS 25 & 25P

Gas valve replacement procedure for KESTON CELSIUS 25 & 25P boilers

These replacement instructions must be read in conjunction with the **Keston CELSIUS 25 & 25P Installation & Servicing Instructions – WD209.**

Before proceeding to the replacement procedure please check if the tamper paint on the adjustment cap is intact. If the tamper paint is broken please return the gas valve to KESTON BOILERS.

To replace the **Gas Valve** (Fig. 5.7.3 item 80) you must carry out the following sequence:

1. Isolate the appliance (Section 7.1)
2. Gain access (Section 7.2)
3. Remove the push on connector block to the gas valve.
4. Remove the plastic air tube to the base of the gas valve.
5. Undo the union fitting (Fig 5.7.3 item 89) securing the gas inlet pipe to the gas valve.
6. Undo the four bolts fixing the mixing venturi (fig 5.7.3 item 81) to the venturi elbow (fig 5.7.3 item 82).
7. Remove the gas valve and mixing venturi as one.
8. Separate the mixing venturi from the gas valve by unscrewing the BSP nipple between the two.
9. Reassemble (Section 7.3)
10. Check the gas rate and combustion – **MANDATORY**

    Although the gas pressure is preset at the factory it is required to assure proper combustion by measuring gas input and the level of carbon dioxide, or oxygen and carbon monoxide, in the flue outlet from the boiler. Over firing or under firing the burner will reduce the longevity of the appliance and may result in excessive carbon monoxide levels.

    Carbon dioxide and carbon monoxide are colourless, odourless gases produced by all combustion processes. When the Keston condensing boiler is operating properly, carbon dioxide (CO_2) levels will be between 8 & 8.5% (low rate) and 8.5 & 9% (high rate) and carbon oxide (CO) levels will be between 5 to 20 ppm (low rate) and 50 to 150 ppm (high rate) for natural gas. For LP gas, carbon dioxide (CO_2) levels will be between 8.9 & 9.3% (low rate) and 9.5 & 10% (high rate) and the carbon monoxide will be between 5 & 20 ppm (low rate) and 50 & 150 ppm.
    In any event, the CO_2 level at low rate must ALWAYS be less than CO_2 levels at high rate.

    To measure CO_2 levels in the Keston boiler remove the 1/8" plug from the flue outlet pipe spigot (Figure 5.7.4 item 19). Insert the probe of a calibrated combustion analysis meter and sample the gases as instructed in the test equipment's instructions.

    When firing the boiler for the first time since installation, the CO level at high rate may be between 100-220 ppm and between 50-80 ppm at low rate. This is due to compounds used during manufacture curing within the combustion chamber. On boilers which have been fired for more than one hour since installation, the CO levels should not exceed 150 ppm at high rate and 50 ppm at low rate. If CO levels above these values are experienced, the combustion chamber and flue system should be investigated.

The procedure below details this setting using an electronic means of locking the boiler on high or low fire rate. Where the instruction requires that the electrical supply to the appliance is isolated, correct isolation procedures shall be followed. Always verify safe electrical isolation before working on an appliance.

1. Electrically isolate the appliance, verify that the electrical supply has been isolated then remove the appliance case by first removing the securing screws at the top and bottom of the appliance.
2. Once the casing has been removed keeping your hands away from exposed electrical components and connections, switch the electrial power supply to the appliance back on. Prior to commencing the adjustment procedure, the boiler should be brought up to the normal working temperature, a gas working pressure of at least 18mbar should be present at the gas inlet test nipple (see Figure 1) and the thin neoprene plastic pipe between the venturi and gas valve should be in place/sound.
3. Turn off the boiler via the fascia control knob and electrically isolate the boiler. Verify that the electrical supply has been isolated.

Figure 1 - Gas Inlet PTN

4. The fascia panel containing the on/off knob should be removed via the four retaining screws. Fascia PCB should have the electrical lead still connected and the knob left to the off position.
5. Please be aware that some of the C25 boilers are fitted with a plastic translucent moisture cover over the top of the gas valve, this cover is held in place by a Phillips screw on the gas valve. Prior to adjustment this shield should be removed.
6. On the right hand board as you look at the boiler face on, you will locate a small electrical bridging jumper attached to the board. The jumper is red in colour, approx 18mm in from the front edge and 12mm up from the bottom edge of the board (see Figure 2).
7. **Please note : The following procedure shall only be carried out by a trained and competent operative.** As the adjustment of the gas valve high and low fire adjustment screw must the indertaken with the appliance running, precautions should be taken to avoid contact with any exposed electrical components and connections.

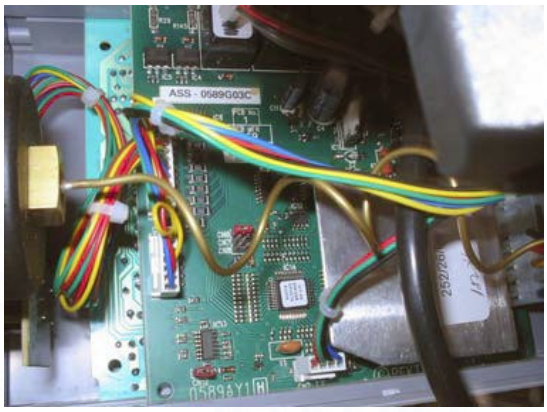

Figure 2 - PCB Fan Speed Jumper

To set the high fire adjustment you will need to lock the boiler in this mode. To achieve this you need to remove the jumper from the board. Then, with the jumper removed, restore power to the boiler. Keeping your hands out of the appliance whilst the electrical supply is on, turn the boiler on and off using the facia control knob. On each operation of the knob to on then off, will result in the illumination of one of the four lower green LEDs in succession. High fire is denoted when the third lower green LED is illuminated. At this point electrically isolate the boiler, verify electrical isolation and then fit the jumper back in its original position, restore power to the boiler and turn the boiler on using the control knob. The boiler should go through its start up procedure and lock itself on high fire with all four LEDs illuminated. The flue gas composition can now be tested via the flue spiggot test point. A reading of 8.5% to 9% CO_2 for natural gas (G20) boilers should be present, or 9.5% to 10% CO_2 for LPG (G31). If the CO_2 is not found to be within this range, the gas valve high fire adjustment screw should be turned to achieve this figure. This screw can be identified from this manual, page 20, item number 8; in addition this screw is identified by the use of tamper paint on the screw head.

8. After the high fire adjustment has been made/checked, isolate the electrical supply to the boiler, verify safe isolation and remove the fan speed jumper again. Restore the electrical supply to the boiler and then turn the boiler on and off using the fascia control knob. Low fire position is confirmed when the second green LED is illuminated, isolate the electrical supply, verify safe isolation and re-fit the fan speed jumper. Restore the electrical supply and turn the boiler on via the fascia control knob. At this point the boiler will fire up with just the first LED on. The low fire flue gas reading should be 8% to 8.5% CO_2 for natural gas or 8.9% to 9.3% CO_2 for LPG. **DO NOT ADJUST ANY ADJUSTMENT SCREW.**

9. After the high then low fire adjustment has been made, then the boiler must be returned to modulation operation. Isolate the electrical supply, verify safe isolation and remove the fan speed jumper. Restore the electrical supply to the boiler and then turn the boiler on and off using the fascia control knob until there are no lower LEDs illuminated. Isolate the electrical supply, verify safe isolation and refit the jumper to the board, refit boiler fascia and case.
   Restore the electrical supply to the boiler and hand over to the user.

If following the above procedure, combustion levels described above at both high and low rate could not be obtained, please turn off the appliance and isolate the gas to the appliance. Telephone KESTON BOILERS technical support (phone no. 0208 462 0262)