KESTON

130,000 Btu/h (38.1kW) Model

Fan Powered High Efficiency
Condensing Gas Boiler

Installation And Servicing Instructions

Keston 130 - GC No 41 930 05

CE No : 87AT9

These instructions must be left either with the user or next to the site gas meter.

KESTON
Boilers

34 West Common Road
Hayes, Bromley, Kent BR2 7BX
Tel. 0181 462 0262 Fax. 0181 462 4459

CONTENTS

Section	Description
1	GENERAL INSTRUCTION
1.1	Description
1.2	Boiler Schematic
1.3	Related Documents
1.4	Performance Data
1.5	General Data
2	BOILER LOCATION
2.1	Dimensions & Minimum Clearances
2.2	Service Connections
2.3	Position
2.4	Electrical
2.5	Boiler Size Selection
2.6	Gas Supply
2.7	Water Systems
2.8	Flue System
2.9	Air Supply
2.10	Compartment Installation
2.11	Condensate Drainage
2.12	Radiant Floor Heating
2.13	Low Water Volume Boiler vs. Cast Iron Boiler
2.14	Determine Radiation Needed Room-By-Room
3	INSTALLATION OF THE BOILER
3.1	Wall Mounting Bracket
3.2	Mounting The Boiler
3.3	Assembly Practice
3.4	Installing Flue And Air Pipes
3.5	Condensate Drainage
3.6	Water System
3.7	Gas Supply
3.8	Electrical Supply
3.9	Exchanging A Boiler
4	COMMISSIONING OF THE BOILER
4.1	Initial Flushing
4.2	Gas Supply
4.3	Electrical Installation
4.4	LP Gas Conversion
4.5	Initial Firing
4.6	Hot Flushing
4.7	Checking The Gas Pressure

4.8 Timing The Gas Meter
4.9 Handing Over To The User

5 FAULT FINDING
5.1 Electrical Control Sequence
5.2 Fault Finding Flow Chart
5.3 Continuity Checking
5.4 Functional Flow Wiring Diagram
5.5 Electrical Wiring Diagram
5.6 Illustrated Wiring Diagram
5.7 Exploded Assembly Diagrams

6 SERVICING
6.1 Pre Service Checks
6.2 Recommended Routine Service

7 REPLACEMENT OF PARTS
7.1 General
7.2 Precautions
7.3 Access
7.4 Electrical
7.5 Gas Orifice
7.6 Spark Ignition/Flame Detection Electrode
7.7 Burner Head & Burner
7.8 Heat Exchanger
7.9 Air Filter
7.10 Condensate Trap
7.11 Pressure Gauge
7.12 Sight Glass
7.13 HT Ignition Lead
7.14 Air Vent
7.15 Air Orifice

8 SPARE PARTS LISTINGS

BENCHMARK INITIATIVE
As part of the industry wide “Benchmark” Initiative all Keston 130 boilers now include a Benchmark Installation, Commissioning and Service Record Log Book. Please read this carefully and complete all sections relevant to the appliance installation. The details of the Log Book will be required in the event of and warranty work being required. There is also a section to be completed after each regular service visit. The completed Log Book should be left with the customer.

CORGI CONTACT INFORMATION
The boiler should be installed and serviced only by CORGI registered operatives. All CORGI registered Installers carry a CORGI ID cad, and have a registration number. **Both should be recorded in the Benchmark Log Book.** You can call CORGI direct on 01256 372300.

1. GENERAL INSTRUCTION

1.1 DESCRIPTION

The Keston Condensing Boiler is unique in its concept and design. While the application for which the boiler was designed is the same as those which other boilers are used the Keston boiler has the added advantage of very high efficiency, and small diameter plastic flue which can be extended to 15 metres horizontally or vertically.

The Keston uses a high power combustion blower to deliver a pre-mix of gas and air to a downward firing burner in a high efficiency, single pass heat exchanger. Normally the combustion temperature of the air gas mixture is around 1800°C but the Keston achieves combustion at an amazing 1000°C thereby reducing the NOx emissions.

The flue system is room sealed and fan powered. The ignition is direct spark and fully automatic. The boiler housing is **not** waterproof and should be installed in a position where it will always be dry. Consideration should also be given to the noise levels generated by the combustion fan when in operation. A small air intake point is incorporated within the appliance cabinet to ensure that the interior of the cabinet is maintained under a slight negative pressure. This is a safety feature to ensure no products may leak out of the cabinet into the installation space.

The boiler is suitable for connection to open vented or, preferably, sealed systems. The system must be pumped central heating or pumped central heating with combined indirect sanitary hot water. Gravity circuits must not be used.

Forming part of the boiler is the heat exchanger which is made from a highly corrosion resistant stainless steel, formed into tightly wound coil. The hot combustion gases from the central down firing burner pass through this coil imparting heat into the system water. Head characteristics of the boiler coil must be taken into consideration when calculating the pump size. The Keston boiler is not a high water content boiler and does not contain the metal mass, or water volume, of a cast iron or steel boiler. This boiler is of low mass and low water content and therefore responds faster when there is a call for heat. This feature requires a higher water pumping rate through the boiler otherwise localised boiling will occur within the boiler. Allow a pressure drop through the boiler of 9.8 ft head (30 kPa) and a water flow of 11 gallons (50 litres) per minute.

The boiler selected must be sized relative to the total calculated heat loss of the building. The boiler rated output should not be greater than the total required to make up the calculated heat loss plus the heat required to provide sanitary hot water, if the system is not hot water priority design. If there are special conditions such as excessive sanitary hot water usage consult the manufacturer.

1.2 BOILER SCHEMATIC

Air is drawn into the boiler through a 50mm muPVC pipe. The air flow is proved by a differential pressure across the air control orifice. Gas is mixed with combustion air at the inlet to the fan. The gas flow is regulated by an orifice located in the housing downstream of the gas valve.

The gas and air are thoroughly mixed in the blower and fed into the burner located at the top end of the heat exchanger module. The gas and air mixture is ignited by a direct spark ignition control system and burns with a blue flame just off the surface of the burner. As the hot products of combustion pass downwards, they are cooled by exchanging heat with the circulating water which enters the heat exchanger coil at the bottom of the heat exchanger.

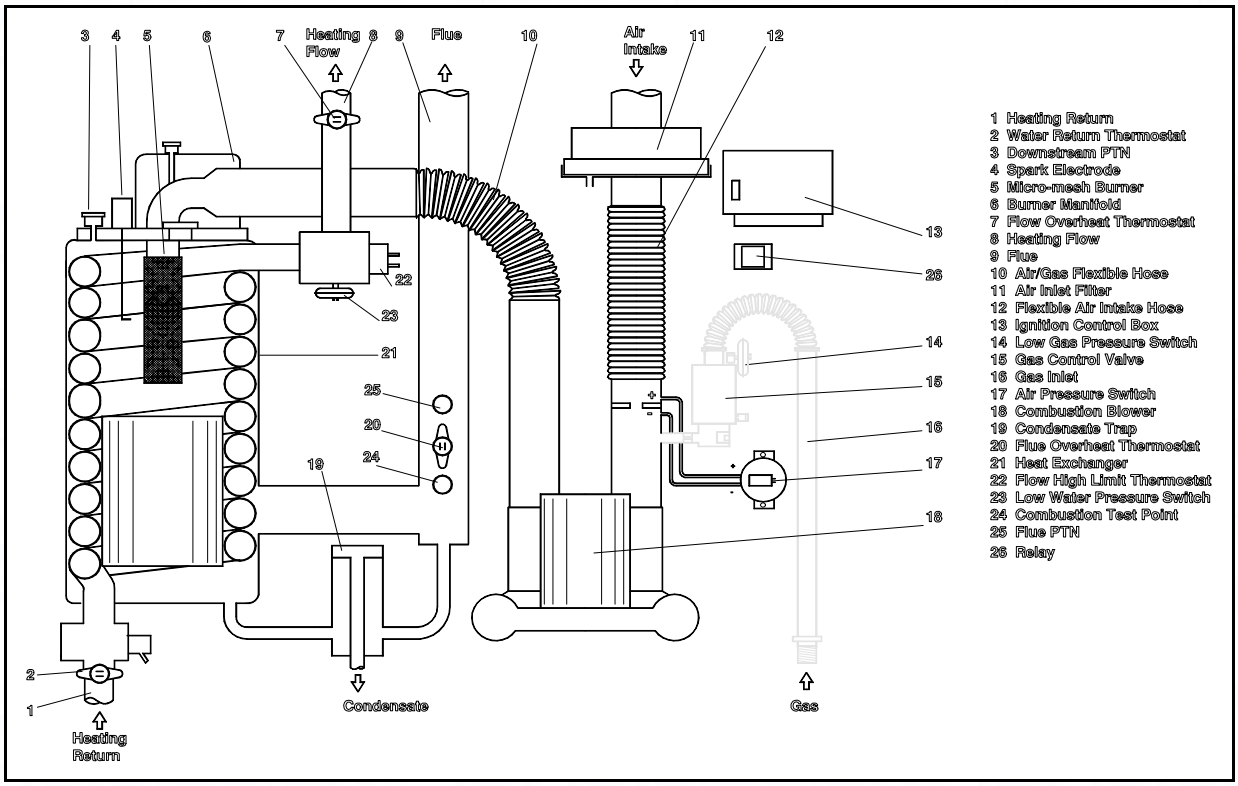

Fig. 1.2 - Boiler Schematic

When the return water temperature is below 54°C, part of the water vapour in the combustion products will condense inside the heat exchanger, thus increasing the boiler efficiency by releasing the latent heat of condensation. This condensate falls to the bottom of the heat exchanger where it is separated from the flue gases and exits from the boiler through the condensate drain. Any condensate formed in the flue runs back down the flueway and is drained at the base of the flue connection to the heat exchanger or drain points within the flue.

The condensate is very slightly acidic (about the same acidity as vinegar) and should be piped in a plastic pipe. It is not harmful to the waste disposal system and may be disposed of as normal waste water.

The flue gases are piped in a 50mm muPVC pipe to the outside. The temperature of the flue gases are usually around 5°C above the temperature of the return water. The flue pipe should be terminated outside the building from where they cannot re-enter the building or any other adjacent building.

The heating level may be controlled by room thermostats, hot water cylinder thermostats, programmer time clocks and energy management systems.

1.3 RELATED DOCUMENTS

The Keston Condensing Boiler must be installed in accordance with the current issue of the *Gas Safety (Installation and Use) Regulations 1996*, current *IEE Wiring Regulations*, *Building Regulations*, *Building Standards (Scotland) Consolidation*, and the *Bye Laws of the local Water Undertaking*.

In addition, due account must be taken to the following Codes Of Practice:

BS 6891	:	*Gas Supplies*
BS 6798	:	*Installation Central Heating Boilers*
BS 5449	:	*Installation Pumped Central Heating*
BS 5482.1	:	*Domestic Propane & Butane Burning Installations*

BS 5546	:	*Installation Domestic Hot Water*
BS 5440.1	:	*Flues*
BS 5440.2	:	*Air Supply*
BS 7074.1	:	*Expansion Vessels*
BS 7593	:	*Treatment of Water in Hot Water Central Heating Systems*

For Timber Framed Buildings, British Gas Publications DM2. Also *British Gas Publications 'Guidance Notes For The Installation Of Domestic Gas Condensing Boilers'* and *'Specification For Domestic Wet Central Heating Systems'.*

1.4 PERFORMANCE DATA

Boiler Input	kW Btu/h	42.0 143,300	Max. Operating Flow Temp.	°C	80.00
Boiler Output To Water (80°C Flow 60°C Return)	kW Btu/h	37.7 128,600	Max. Head (Open Systems)	m Ft	30.50 100.0
Boiler Output To Water (60°C Flow 40°C Return)	kW Btu/h	39.5 134,800	Max. Press. (Sealed Sys.)	Bar	2.70
Boiler Output To Water (50°C Flow 30°C Return)	kW Btu/h	40.5 138,200	Min. Head (Open Systems)	m Ft	3.0 9.0
Burner Setting Pressure (Hot)	***Factory Preset to 4.0 mbar***		Inlet Gas Pressure	mbar in wg	20.0 8.0
Gas Comsumption After 10 mins (CV of Gas - 38.7 MJ/m³) (1038 Btu/Ft³)	l/s Ft³/hr	1.09 138.78	Gas Orifice Size	mm	3.8
			Recommended Temperature Differential	°C	10 to 15

1.5 GENERAL DATA

Main Burner	*Keston Premix*	Flow Connection	*35mm Copper*
Gas Control	*White Rogers 36E Series*	Return Connection	*35mm Copper*
Combustion Fan	*Keston* *Type LPB 103 220/240* *0.6 kW 2900 RPM*	Power Supply	*230V 50Hz*
		Pwr Consumption	*610 W*
Direct Spark Ignition	*RAM 2EMC22* *Full Sequence Control*	Ext Fuse Rating	*10 Amp*
Air Press. Switch	*Tridelta FS6717-1428*	Weight - Full Weight - Empty	*68 kg (150 lbs)* *61 kg (134 lbs)*
Filter	*Keston Filter*	Data Badge Posn	*Right Hand Panel Inside Case*
Gas Supply Connection	*0.75 inch BSPT Male (22mm to gas cock)*	Water Content	*7.0 litres*

2. BOILER LOCATION

All dimensions in mm.

2.1 DIMENSIONS AND MINIMUM CLEARANCES

The boiler must be installed in minimum clearances shown to allow subsequent servicing, and safe operation.

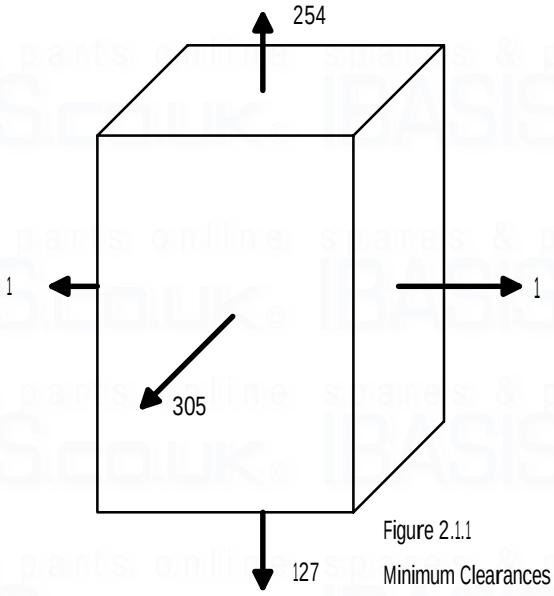

Figure 2.1.1
Minimum Clearances

2.2 SERVICE CONNECTIONS

Gas, water, air and flue pipe, condensation, and electrical connections are as shown. Gas : 0.75 inch BSP male. Flow/Return 35 mm copper.

2.3 POSITION

The Keston is not suitable for external installation. The boiler may be installed in any room or internal space, although particular attention is drawn to the requirements of the current IEE Wiring Regulations and, in Scotland, the electrical provisions of the Building Regulations applicable in Scotland, with respect to the installation of the boiler in a room or internal space containing a bath or shower.

Where a room-sealed appliance is installed in a room containg a bath or

Figure 2.1.2 Dimensions

All dimensions in mm.

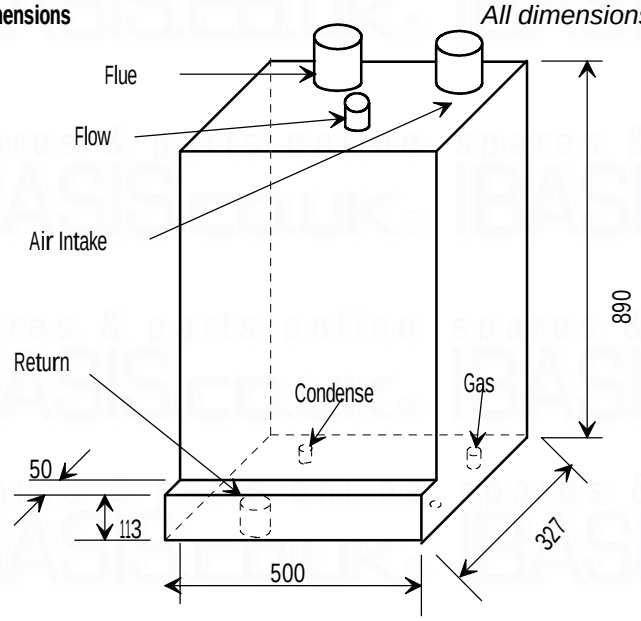

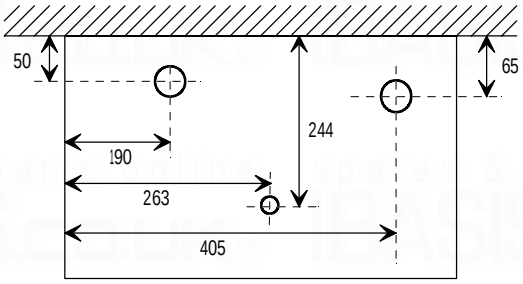

Top View

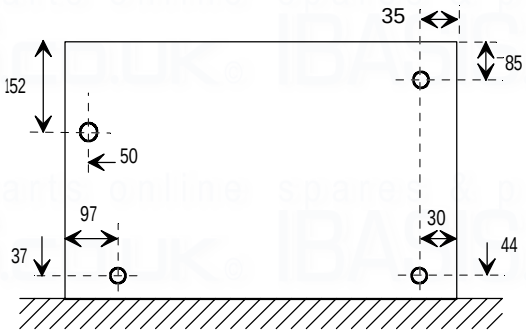

Base View

Service Connection Locations

All dimensions are in mm.

shower, any electrical switch or appliance control, utilising mains alectricity, should be so situated that it cannot be touched by a person using the bath or shower.

Compartment installation is permitted - such compartments must be constructed in accordance with BS 6798.

The wall on which the boiler is mounted must be of suitable load bearing capacity and must be non-combustible.

Important : It is not recommended to install the boiler on a studded wall or similar - it is possible that the vibration from the fan would be amplified and transmitted to other parts of the property.

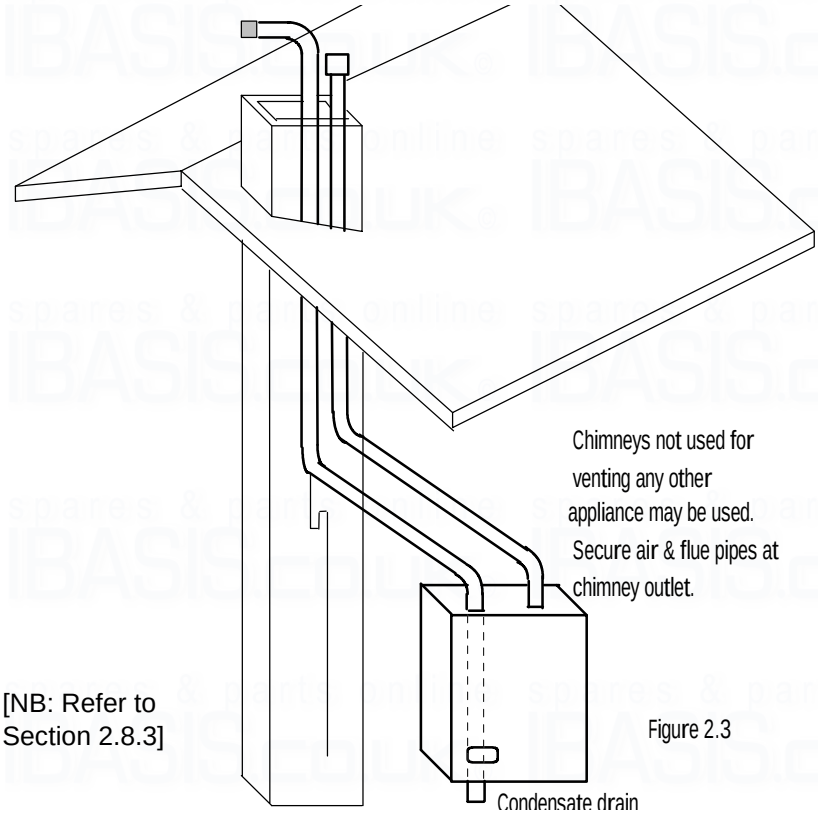

[NB: Refer to Section 2.8.3]

Figure 2.3

The Keston can be located virtually anywhere desired provided that all regulations are complied with. Because of the boiler's compact size and venting flexibility, the installation is not limited to a boiler room setting. Before locating the boiler near a living space consider whether the sounds generated by the boiler will be objectionable. The boiler may be located within a cupboard enclosure to reduce noise levels if located within a living space.

2.4 ELECTRICAL

2.4.1 Electrical Connections

The boiler must be connected to a permanent 230V ~ 50Hz supply, fused at 10A. **An additional switched live supply 230V ~ 50Hz rated at 2A must be provided from the external system controls. All external controls and wiring must be suitable for mains voltage**. A pump connection point is provided within the boiler to enable the optional pump over-run facility to be used. Alternatively, the appliance can be fed by a single switched 10A supply by linking the switched and permanent live connection points (see Section 3.8). If a

single 10A switched supply is used then the pump over-run facility will not be enabled.

Wiring external to the boiler must be in accordance with current I.E.E wiring regulations and local regulations.

The method of connection to the mains electricity supply **must** facilitate complete electrical isolation of the boiler, preferably by the use of a fused, unswitched three pin plug and a shuttered socket-outlet, both complying with the requirements of BS 1363. There must be only one common method of isolation for the boiler and its control system.

The appliance must be connected to the 10A supply via a fused double-pole switch having at least 3mm (1/8 inch) contact separation in both poles, serving only the boiler and the system controls.

The connection point to the mains supply should be readily accessible and adjacent to the boiler, except for rooms containing a bath or a shower. Refer to section 2.3 Position.

2.4.2 External Wiring & Controls

1. The boiler is designed so that **all** control wiring is external to the boiler.
2. System designs which allow the boiler to fire when there is no pumped circulation must **NOT** be used. Provision is made in the boiler for boiler pump connection with pump over-run facility.
3. A programmer may be used with zone valves to give independent control of central heating and hot water.

2.5 BOILER SIZE SELECTION

The size of the boiler to be used is determined by the total calculated heat loss of the building. Match the calculated heat loss with the boilers rated output. *If a boiler is installed with an output rating greatly exceeding the total capacity of the distribution system the efficiency of the boiler will be reduced.*

2.6 GAS SUPPLY

A gas meter should be connected to the service pipe by the local gas region or their contractor. An existing meter should be checked preferably by the gas region to ensure that the meter is adequate to deal with the rate of gas supply required. Installation pipes should be fitted in accordance with BS 6891.

Minimum/Maximum Natural Gas Pressure:
Natural gas pressure before the gas valve must be maintained at 20 mbar (8 in WG) while the boiler is running.
Gas pressures above or below this level will lead to problems associated with the gas valve's internal pressure regulator.

Supply pipes to the boiler must not be sized less than the boiler inlet connection (22 mm). Due consideration must be given to the supply pressure to other gas appliances in the premises. Reduction in dynamic gas supply pressure will result in intermittent ignition failures. Ensure gas supply pipe work is adequately sized for the length of run from the meter to the boiler.

A gas cock is supplied loose with the boiler. This cock should be fitted in the gas line to the boiler as close to the boiler as possible so that it is easily identified as the cock to isolate the boiler.

2.7 WATER SYSTEMS

All piping must be installed in accordance with all applicable local and Water Supply Bylaws for forced hot water heating systems.
Consideration must be given to pipe capabilities and pressure drop through the piping.
Water treatment must be carried out to BS 7593 : Treatment of Water in Hot Water Central Heating Systems.
Pump isolating valves must be positioned as close to the pump as possible.

a The Keston 130 is suitable for use on open, vented water systems with combined feed and vent.

b It is preferable for use on sealed water systems, provided the appropriate components required (see Section 2.7.2 Sealed Systems) are included in the system.

c Any system must be thoroughly flushed clean of grease, dirt and debris, prior to connection with the boiler. A trap should be installed in the flow line to collect any solder, or other debris, from the installation.

d All water systems must be constructed to comply with requirements of the Local Water Authority.

e Only fully pumped systems can be used - gravity systems are strictly not suitable.

f Always use a system complying with the requirements of BS 5449 and BS 6798.

g The system must be so arranged that there shall always be a minimum flow of 11 gpm (50 litres/min) when the boiler is firing. This can be via a specially installed by-pass arrangement.

h Copper tubing to BS 2871 Part 1 is recommended.

i Jointing should be either with capillary, threaded or compression fittings. Pipes should have a gradient to ensure air is passed easily to vent points and water flows readily to drain points.

j Draining taps must be located in accessible positions which permit the draining of the boiler and hot water storage vessel. Draining taps should be at least 22 mm in nominal size and be in accordance with BS 2879.

AIR VENT POINTS

h These must be fitted at all high points where air will naturally collect and must be sited to allow complete draining of the system.

2.7.1 Open Vented Systems

A typical system is shown in Figure 2.7.1 which includes a combined feed and vent. Note there must be no valve between the boiler flow and the open vent. Note that the minimum static head required is 9 ft at the top of the boiler. If the cold feed/vent is not brought to the flow pipe as shown, then the pressure loss across the heat exchanger may have to be taken into account when estimating the static pressure.

Although suitable for open vented systems with combined feed and vent arrangements, the Keston is a low water content boiler. As such, any air entrainment within the system water will produce boiler “kettling”. It is therefore recommended, if in any doubt, to consider the use of sealed systems where possible.

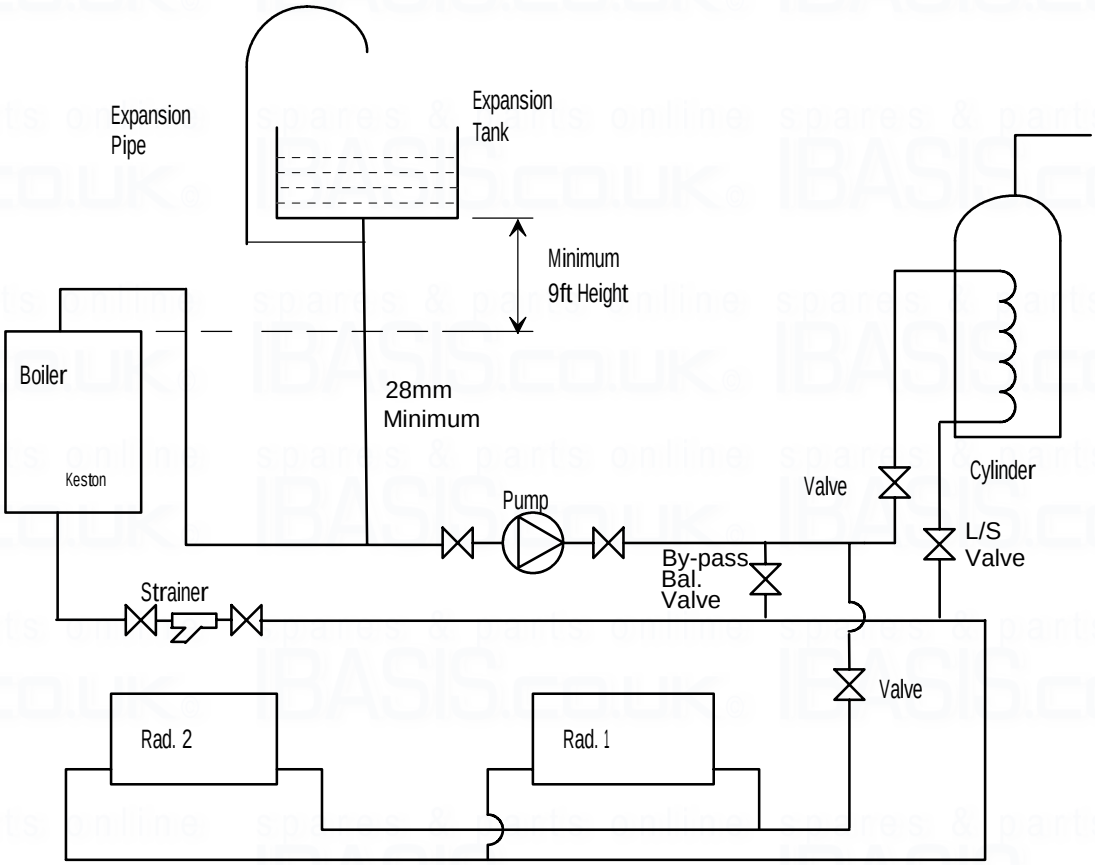

Figure2.7.1 : Open Vented System Diagram

2.7.2 Sealed Systems

Sealed systems must be designed in accordance with BS 5449 and BS 7074 Pt1. A typical sealed system is shown in Figure 2.7.2. It must include :

(i) A safety valve fitted on the flow, adjacent to the boiler. It must be non adjustable and preset to 3 bar. A drain pipe must be attached, at least as big as the valve connection, and routed to drain in any area not hazardous nor where it may be subject to freezing.

(ii) An expansion vessel complying with BS 4814 and sized in accordance with the requirements of BS 5449 and BS 7074 Pt 1. The vessel must be positioned on the inlet to the pump.

(iii) A filling point, in accordance with local water authority requirements.

(iv) A method of system make-up (automatic or manual), in accordance with local water authority requirements.

(v) There must be no permanent connection of mains water to the boiler system.

(vi) The installation must be designed to work with flow temperatures of up to 110 °C.

All components of the system including the heat exchanger of the indirect cylinder must be suitable for a working pressure of 3 bar and a temperature of 110 °C. Care should be taken in making all connections that the risk of leakage is minimised.

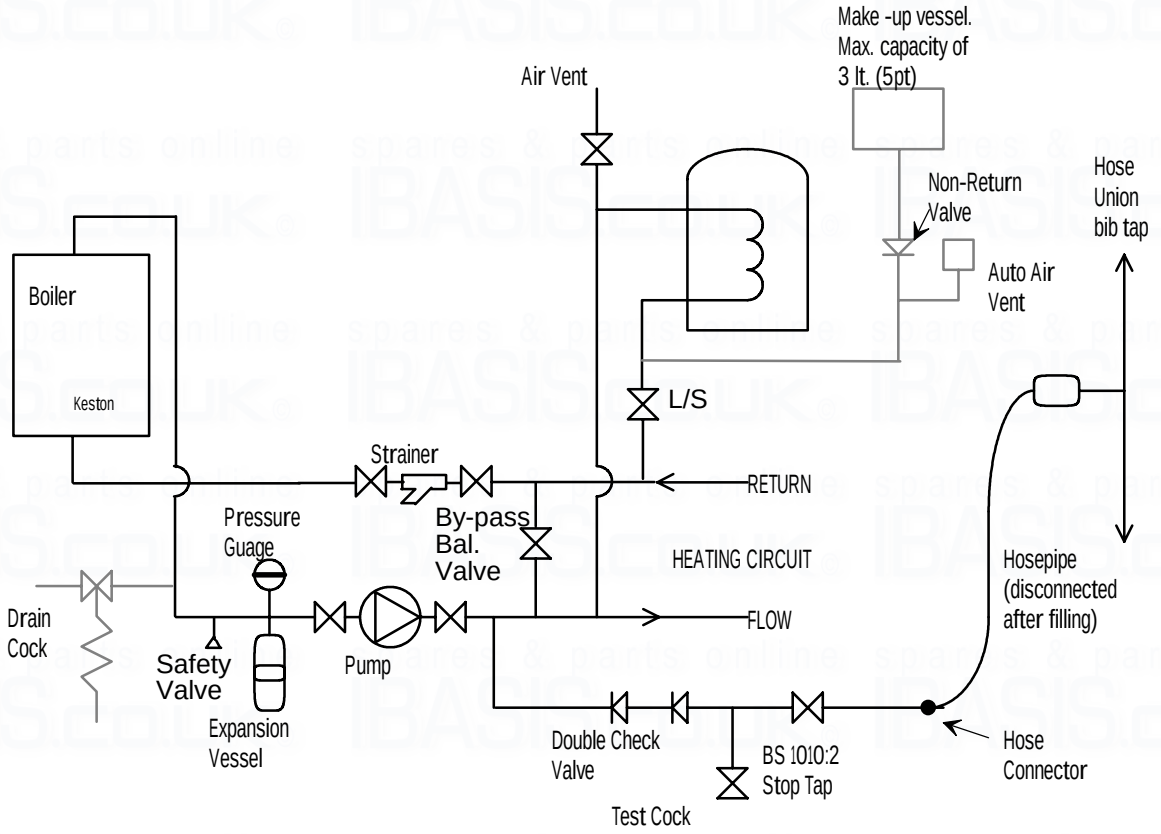

Figure 2.7.2 : Sealed System Diagram

2.7.3 Hot Water System (if applicable)

The hot water storage vessel must be of the indirect type (certain direct cylinders can be used provided they are suitably adapted by fitting an immersion calorifier). DIRECT CYLINDERS MUST NOT BE USED. Further guidance is provided in BS 1394. It is advisable to fit a locksheild valve on the cylinder return to enable balancing of the flow rate through the cylinder.

2.7.4 Boiler By-pass Piping

Boiler water flows are critical to the operation of the boiler. If flow cannot be maintained through the system piping to meet the minimums required by the boiler (see paragraph 2.7 (g)). Insufficient water flows through the boiler will cause the boiler to "kettle" or even produce steam which can damage the heat exchanger and will invalidate the heat exchanger warranty.

It is normally advisable to incorporate a boiler by-pass in the system, especially if thermostatic radiator valves are used. The by-pass should be fitted with an automatic by-pass valve to permit balancing of the by-pass flow rate. The flow/return differential should be 10°C to 15°C. The valve should be adjusted to maintain this condition with all thermostatic radiator valves closed.

2.7.5 Air Elimination

In the initial charge of water to the boiler system and in all subsequent additions of water to the system some air will be dissolved in the water. As the water is heated the air is driven out of the solution and will collect in high spots in the system. **These air bubbles can interfere with pumping and heat transfer and must be eliminated.**

Installation of air bleed valves at the high spot(s) in the system will allow for air elimination when filling the system and will allow re-venting in a day or so after all air has been driven out of solution.

2.7.6 Strainers

Debris in the heating system can cause noise if it enters the heat exchanger. Fitting of a Y-strainer ahead of the circulating pump will trap any debris left in the system and will protect the pump from damage. The boiler guarantee does not cover heat exchanger failure due to debris abrasion within the system.

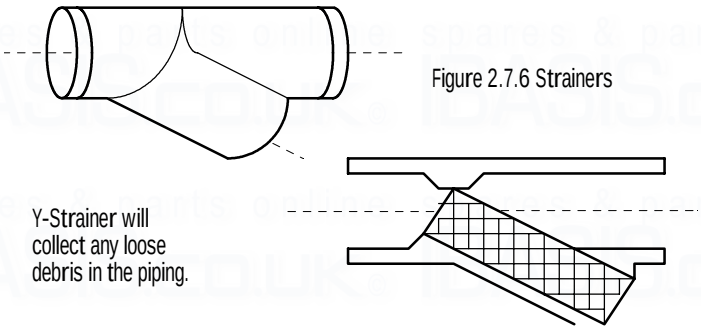

Figure 2.7.6 Strainers

2.7.7 Pump Selection

The Keston boilers have low water content heat exchangers with a high resistance to flow, when compared with cast iron heat exchanger boilers. As a result selection of the correct pump is essential in order to avoid localised boiling within the heat exchanger. The selected pump must be capable of maintaining the required flow rate for the boiler against the pressure losses contributed by the boiler.

The Keston 130 condensing boiler offers a hydraulic resistance of 3.0m (9.8ft) water at the required flow rate of 50 l/m (11 gpm).

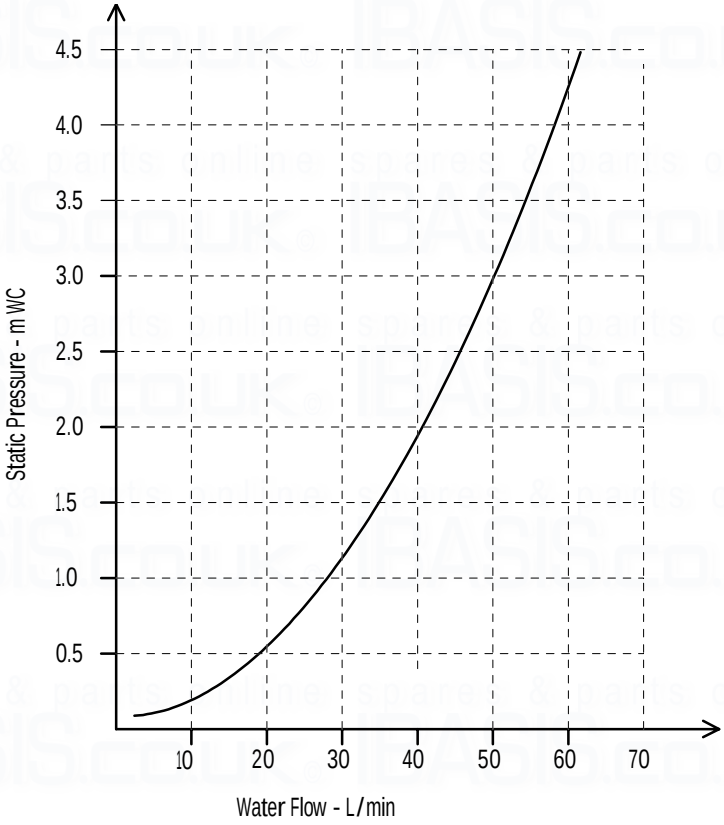

Figure 2.7.7 : Pressure Loss Graph

If a single pump is to be used for the entire installation the

boiler resistance must be added to the pressure loss caused by the rest of the system and a pump selected that is capable of meeting the flow rate required at the total pressure loss generated by the boiler and the rest of the system. The selected pump must comply with BS 1394. It is important to note that the minimum flow rate must be maintained whenever the boiler is firing. Systems using zone valves must be specifically designed to only fire the boiler when the pump is running and the minimum flow rate can be achieved.

2.8 FLUE SYSTEM

2.8.1 Design

Individual air supply and flue outlet pipes are used. The material used for flue outlet &/or air inlet must be **muPVC** to BS 5255 an of an internal diameter of 51 mm. (ie nominal 50mm diameter muPVC solvent weld waste pipe)

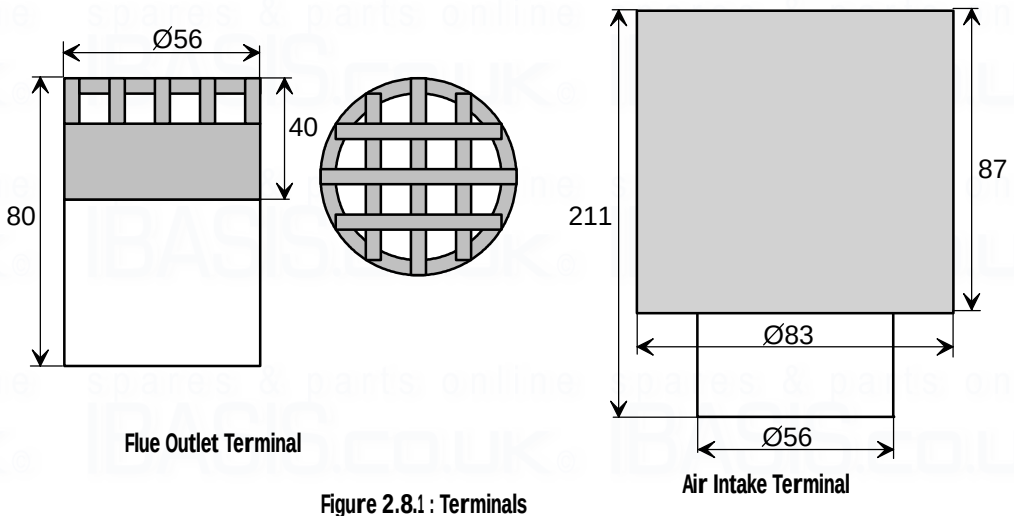

Figure 2.8.1 : Terminals

Both flue outlet terminal and air inlet terminal are supplied and are illustrated in Figure 2.8.1 above.

2.8.2 Maximum Lengths

The maximum lengths of both air inlet pipe and flue outlet pipe, when no bends are used, are as detailed below.

Maximum Air Inlet Length	:	15.0 m
Maximum Flue Outlet Length	:	15.0 m

However, each bend used has an equivalent length that must be deducted from the maximum straight length stated above. Knuckle bends must not be used.

A 92.5° sweep elbow is equivalent to 1.0m straight length.

<u>Example:</u>

Air inlet uses two one 92.5° sweep elbows. Hence, maximum length permissible (ie a+b in figure 2.8.2) = 15.0m - 1.0m - 1.0m = 13.0m

Flue outlet uses one 92.5° sweep elbow. Hence, maximum length permissible (ie c+d in figure 7 = 15.0m - 1.0 m = 14.0m

2.8.3 Slope

'Horizontal' flue outlet pipework MUST slope at least 5 degrees (80 mm per metre

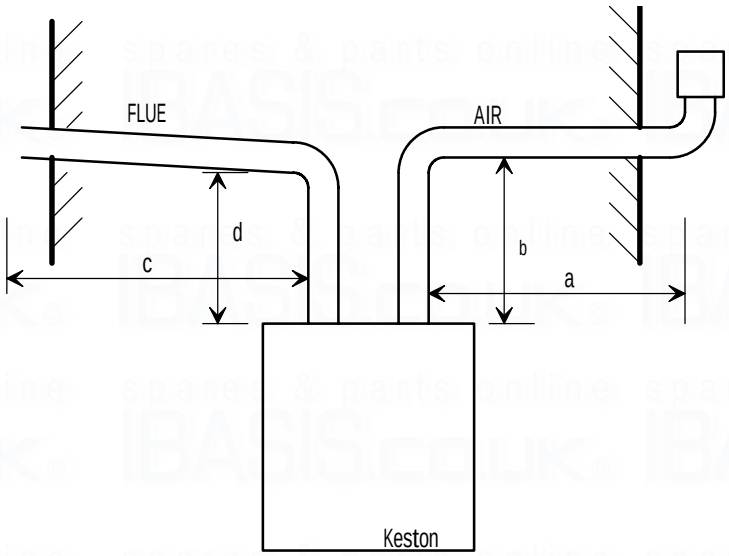

Figure 2.8.2 : Flue & Air Maximum Length Example

run) downwards towards the boiler. Pipework can be vertical. Only swept elbows can be used.
Air inlet pipework can be truly horizontal or vertical, or sloping in a downward direction towards the boiler but in this case rain, etc, must be prevented from entering the pipe. **There must be no troughs in any of the pipework, whether it be air inlet or flue outlet.**

Due the low temperature of the flue gases further condensate will form within the flue system. Drain points, with suitable traps, must therefore be incorporated within the flue system at the base of vertical flue sections in excess of 2m. These additional condensate drains must be run to discharge as detailed in section 2.11. Such drain points can be formed using standard muPVC fittings. Refer to the example in Figure 2.8.3.

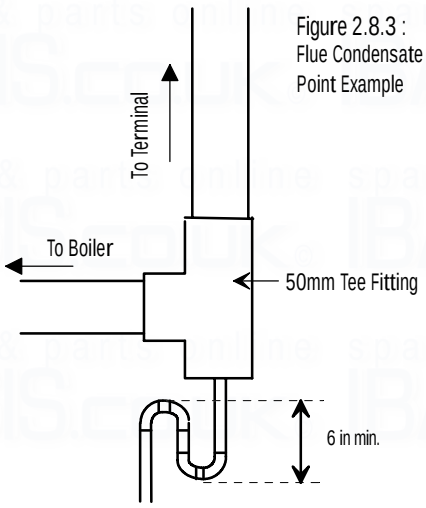

Figure 2.8.3 :
Flue Condensate Drain Point Example

2.8.4 Terminations

Air inlet terminals must be facing upwards and positioned to ensure only fresh air is drawn into the boiler. The air terminal must be located outside of the building.

Drawing of combustion air directly from a ventilated boiler room invalidates the heat exchanger warranty.

Dimensions (mm)		Flue Terminal	Air Inlet
A	Below openable window, air brick, etc.	300	50
B	Below gutters, soil pipes, drain pipes.	75	75
C	Below eaves.	300	50
D	Below balconies or car port roof.	200	50
E	From vertical drain or soil pipes.	75	50
F	From internal or external corner.	600	50
G	Above ground or balcony or roof.	300	100
H	From surface facing a terminal	600	100
I	From terminal facing a terminal.	1,200	1,200
J	From opening in a car port.	1,200	100
K	Vertically from terminal on same wall.	1,500	1,500
L	Horizontally from terminal on same wall.	300	300

Table 2.8.4 Minimum Flue Terminations & Air Inlet Dimensions

The air inlet terminal must face upwards to prevent entry of rain into the air intake pipework.
The flue outlet terminal is designed to face outwards but can, if desired, be adapted to face in any direction BUT must not be directed in the region of the air inlet.
The two terminals are subject to the requirements of BS 5440 Pt 1 for clearances from features of the building although some can be decreased to the values indicated.
If either the air inlet or the flue outlet terminate at a height of less than 2m (6ft) above ground level the termination must be protected by a suitable guard. The K4 terminal guard, manufactured by Tower Flue Components Ltd, is suitable for this purpose and can be obtained from Keston Boilers.
The Keston Condensing Boiler, as with any condensing boiler, will generate a condensate "plume" from the flue terminal in all weather conditions. Consideration must therefore be given to the effect of this "plume" when selecting a location for the flue terminal.
It is advisable for horizontal flue terminals to place a 45° elbow at the end of the flue to direct the condensate plume up and away from the property.

2.8.5 Clearances From Wall

Flue outlet and air inlet terminations must be at least 60 mm and 95 mm respectively from the wall face.

2.8.6 Distance Between Flue Outlet & Air Inlet

There is no maximum - the terminations can be on opposite sides of the dwelling if desired.
A minimum clearance of at least 500 mm must be left between the terminations.

2.8.7 General Installations

All parts of the system must be constructed in accordance with BS 5440 Part 1, except where specifically mentioned in these instructions.
All pipe work must be adequately supported.

All joints other than push-on or plastic compression connectors must be made and sealed with solvent cement suitable for muPVC pipes and conforming to BS 6209: 1982.
External wall faces and any internal faces of cavity walls must be made good.

2.9 AIR SUPPLY

The Keston is a room sealed appliance and therefore does not require purpose provided ventilation to the boiler room for combustion air.

2.10 COMPARTMENT INSTALLATION

The casing temperature of the Keston 130 is very low. Due to this fact, no compartment ventilation is required for cooling purposes.

2.11 CONDENSATE DRAINAGE

Being a condensing boiler, the Keston is fitted with a condensate trap at the base of the heat exchanger and flue assembly, with facility to connect to a drain point underneath the appliance.

Use only plastic piping and do not reduce below 15mm internal diameter within the dwelling. Condensate should preferably be drained into the sanitary waste system or, alternatively, the rainwater system of the property.

Termination of the pipe must be either at a branch or stack internal to the house, or externally at an open gully. Alternatively, discharge into a purpose made condensate soakaway can be considered. Existing or purpose built drains must use suitable corrosion resistant material as condensate is mildly acidic.

A minimum slope downwards towards the drain of 1 in 20 is essential. Freezing of the termination and pipework must be prevented. Any drainage pipes outside the property must be at least 32 mm *inside* diameter.

2.12 RADIANT FLOOR HEATING

The low operating temperatures of this type of system lead to very good operating efficiencies. In fact, under floor heating can produce in excess of 95% operating efficiency from a Keston condensing boiler.

Water temperatures in radiant floor heating systems must be kept relatively low, generally under 48°C, so that surfaces do not become uncomfortably warm to the touch. If radiant heating is only one application for a multi-zone system which also requires higher delivery water temperatures for other zones (i.e. water heating, skirting heaters etc.) then the radiant floor zone temperature will need to be controlled separately from the boiler.

If radiant floor heating is the only application of the boiler, the boilers maximum operating temperature can be lowered accordingly by introducing a supplementary control thermostat within the control system of the installation.

Mixing valves are also available which will mix return water from the system with boiler output water to dilute the temperature of water transmitted to the distribution system. Mixing valves may create problems with low flow and high temperatures through the boiler, unless care is taken to design a system which will provide proper flows and will fully load the boiler. Keeping the boiler's temperature high will prevent the boiler from operating at peak efficiencies. Systems which maintain boiler temperatures in this way should be avoided.

If only a portion of the boiler's available output is to be used for radiant floor heating a thermal storage tank will improve the boiler's operation and give adequate control of temperature for the distribution system. By heating water to be distributed to the radiant floor zone to the proper temperature in an indirect-fired water heater, full load conditions will be available to the boiler because the heat exchanger in the tank can be sized to match the boiler's output. The tank's thermostat can be set at the optimum operating temperature needed by the distribution system and short-cycling of the boiler will be prevented.

2.13 LOW WATER VOLUME BOILER VS. CAST IRON BOILER

Because of their high water content and mass of metal, cast iron and steel boilers are less responsive but somewhat more forgiving of design errors. Short-cycling of the burner on the temperature limit control is less pronounced, though no less detrimental to operation, because the boiler itself will absorb and radiate a significant amount of heat. Low water volume boilers respond more quickly to a call for heat, can be made more compact and lightweight, but must have adequate heat delivery systems to avoid short-cycling of the burner on the temperature limit control. The heat delivery system's output must be equal to or greater than the boiler's output to fully load the boiler or short-cycling will occur.

Likewise, pumping rates of water through low water volume boilers must be maintained so that water is moved through the boiler fast enough so as not to reach boiling temperatures. The slower the water moves through the boiler the more heat it will absorb and the higher the temperatures will rise. Consequently, the pump selected must be adequate to maintain that critical flow of water.

2.14 DETERMINE RADIATION NEEDED ROOM-BY-ROOM

A radiator or convector's ability to deliver heat is related to the water temperature and the rate of delivery to the unit. Most systems in the past have been rated at about 80ºC. Higher efficiencies can be gained from a condensing boiler if ratings published at lower temperatures are used. However, this is not imperative. With normal 80ºC ratings used a condensing boiler will still deliver significantly higher efficiencies than a non-condensing boiler. Lower water temperatures in the system tend to increase the efficiency of the boiler and will help assure that the boiler is subjected to a sufficient load to avoid short-cycling.

The Keston boilers are capable of temperatures of up to 80ºC but the higher the temperature of the return water, the lower the efficiency of the system. This is true of all boilers, though all **non-**condensing boiler *must* be kept at higher temperatures to avoid condensation in the boiler which destroys such boilers quickly. Materials used in the Keston are made to withstand the condensates corrosive nature.

3. INSTALLATION OF THE BOILER

Read Chapter 2 - Boiler Location and decide upon the position of the boiler.

Installation of the boiler is straightforward but consideration must be given to access to allow flue and air pipes to be pushed through walls and ceilings. The order in which the components are installed will depend upon particular site conditions, but in general it will be easiest and most accurate to install the boiler and then build up the flue outlet and air inlet pipes to the terminal - this is the sequence described.

3.1 WALL MOUNTING BRACKET

a Place the bracket on the wall horizontally with the pre-drilled holes at the bottom.

b Drill through the centre hole of the bracket, plug the hole and fix in position.

c Using a spirit level make sure the bracket is completely level and mark the position of the other screw holes.

d Remove the bracket and drill the holes in the positions marked. Plug these holes.

e Screw the bracket to the wall using screws of an appropriate size for the wall type (No. 12 x 2 inch wood screws normally suffice).

f Mark the bottom fixing hole and drill for a No 8 x 1 inch wood screw. Insert plug.

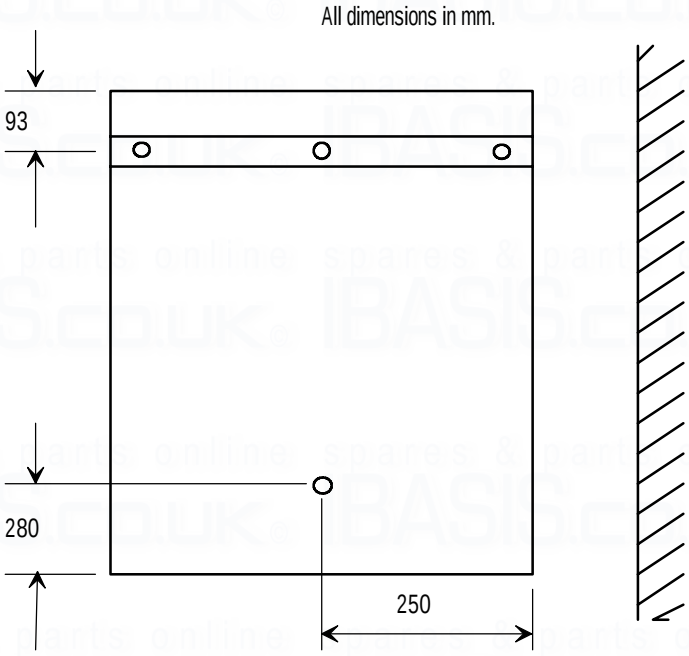

Figure 3.1 Wall Mounting Fixing Locations

3.2 MOUNTING THE BOILER

a Lift and locate the upper rear lip on the boiler to the boiler wall bracket.

b Move the boiler sideways to centralise the boiler on the bracket.

c Screw in the lower fixing screw.

3.3 ASSEMBLY PRACTICE

Remove all plastic debris and burrs when installing air intake piping. Plastic filings caused by cutting muPVC pipe must not be allowed to be drawn into the filter or combustion air blower. Prevent dust entering the air intake when cutting on building sites. Blower failure which is determined to be caused by plastic filings or other debris will not be covered by guarantee.

Combustion air filters are fitted to the Keston condensing boilers as standard. This filter must be examined at least once every year, and more often in particularly dusty and dirty areas.

The combustion air filter will prevent plugging of the burner caused by dirt being trapped in the burners outer mesh. The filter element supplied with the boiler is obtainable from Keston Boilers or its distributors.

3.4 INSTALLING FLUE AND AIR PIPES

Remember the flue pipe must slope downwards back towards the boiler and this is best achieved using 92.5° bends.

a From the two connections on the boiler, mark the positions of the two holes for the flue and air pipes on the wall(s) or ceiling. To allow access to drill the holes it may be necessary to temporarily remove the boiler. If the boiler stays put then it is imperative that the front panel and top access plate are replaced and the two plastic pipes capped off whilst drilling. Under no circumstances must debris from the wall or cut pipes be allowed to enter the appliance or the plastic pipework.

b Drill the two holes in the wall/ceiling, preferably using a core drill.

3.4.1 Diameter of holes.

i) Allowance must be made for socketed lengths if these are to be passed through the holes :

du = unsocketted diameter
= 56 mm
ds = socketed diameter
= 65 mm

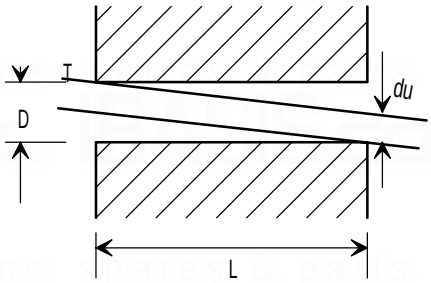

ii) For 'horizontal' runs of flue pipe the holes must either be oversized or cut at a 5° slope (the latter may be difficult on long holes).

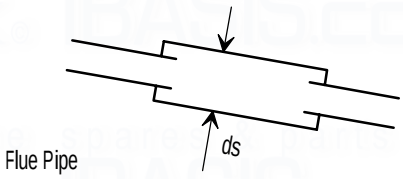

3.4.2 Oversizing

For every 1m length of run, L, the minimum diameter of the horizontal hole, D, must be du + 10 mm or ds + 10 mm respectively, assuming the pipe touches the wall at points T otherwise D will have to be increased by clearance from T. See Section 3.4.3 - Examples.

3.4.3 Examples

a.	Wall Depth	L	=	750 mm
	Unsocketted pipe	du	=	56 mm
	Diameter hole	D	=	$56+[(^{750}/_{1000})x10]$
			=	56+7.5
			=	63.5 mm
b.	Wall depth	L	=	2300 mm
	Socketed Pipe	ds	=	65 mm
	Diameter Hole	D	=	$65+[(^{2300}/_{1000})x10]$
			=	65+23
			=	88 mm

c. Measure, cut and check the air and flue pipes to pass to the exit from the wall(s) or ceiling.

Always thoroughly deburr all pipes and, most important, remove shavings from within the pipe.

d. Assemble, using adhesive, the pipework from the boiler connections to the exit from the first wall/ceiling (remount the boiler if removed). When pushing pipe through walls, ensure grit and dust is not allowed to enter the pipe.
Ensure pipes are fully engaged into sockets.
Connect the condensate drainage system and fill the condensate trap by pouring water down the boiler flue spigot (See Section 3.5 Condensate Drainage).
Make the final connection of flue and air pipe to the boiler using push on, or plastic compression couplings. Ensure that the connectors are set vertically otherwise leakage of condensate may occur which will corrode the casing. Do not use adhesive on the 'push on' end of connecting couplings.

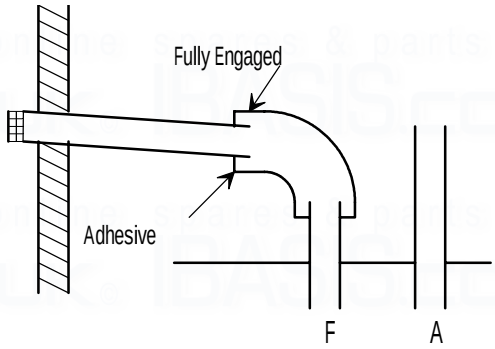

e. Using the same methods drill any further holes (always covering existing pipework), cut and assemble the pipework.

f. From outside, complete the two terminations - See Section 2.8 Flue System and make good all holes.

g. Support any pipes whose route could be displaced either of its own accord or by accident. Any horizontal run over 1m or vertical runs of any length must always be supported. Brackets should be placed at intervals of approximately 1m.

h. Check all connections for security and re-seal any joints using sovent cement where soundness may be in doubt.
Note: It is equally important to seal the air inlet with solvent cement as the flue outlet pipe joints.

3.5 CONDENSATE DRAINAGE

Connect the condensate drainage system to the boiler. It is advisable to use a detachable fitting at connection to the boiler to enable easy removal for servicing.

Fill the condensate trap by pouring water into the boiler flue spigot until water is seen to flow freely from the condensate drainage system. Make the final connection of flue pipe to the boiler.

Details are provided in Chapter 2 - Section 2.11 Condensate Drainage
Connection : 22 mm plastic pipe.

3.6 WATER SYSTEM

Connect the flow and return pipework to the boiler. Ensure a detachable coupling is used at connection to the boiler (ie compression fitting) to enable heat exchanger removal if required. Details of system requirements are given in Chapter 2 - Section 2.7 Water Systems.

Connections : 35 mm compression X 35 mm compression.

3.7 GAS SUPPLY

Connect the gas supply to the appliance. Details of gas supply requirements are given in Chapter 2 - Section 2.6 Gas Supply. Supply of adequate gas pressure **(with the boiler running)** is critical to ensure reliable operation of the boiler.

Connections : 0.75 inch BSP male.

3.8 ELECTRICAL SUPPLY

NB: This boiler includes an optional timed (2 minute) pump over-run facility. If this pump over-run facility is not required the pump may be wired externally to the boiler.

The entry point(s) for the electrical supply cable(s) is in the base of the appliance (see Section 2.2 Service Connections fig. 2.1.2) via two cordgrip bushes. Feed the cable(s) through its bush and route inside the cabinet to the connection strip located to the front bottom right of the cabinet.

1. The electrical supply must be as specified in Chapter 2 - Section 2.4 Electrical Supply.
   WARNING : THIS APPLIANCE MUST BE EARTHED.
2. All external controls and wiring must be suitable for mains voltage.Supply wiring should be in 4 core PVC insulated cable not less than 1.0mm^2 to BS 6500 Table 16 (material code H05VV-F). Pump wiring from the boiler pump connection should be in 3 core PVC insulated cable not less than 0.5mm^2 to BS6500 Table 16 (material code H05VV-F).
3. The permanent live supply connection may be via a 10 amp fused double pole switch, serving only the boiler. (Refer to Chapter 2 - Section 2.4 Electrical Supply). The system controls and 2A switched supply for the boiler must also be supplied via this isolator.
4. Securely tighten the terminal screws and route the cable through the re-openable cable clips. Ensure all cables are secured and that the cord grip bush is tightened to securely grip the main cable at entry to the cabinet.
   The supply cable(s) must be connected to the main terminals as follows:-

N	-	Blue wire (Neutral) for 10A permanent and 2A switched supplies
PL	-	Brown wire (Live) 10A permanent supply
SL	-	Brown wire (Live) 2A switched supply.
	-	Yellow/Green Wire (Earth)

The pump cable must be connected to the pump terminals as follows:-

N	-	Pump neutral wire (blue)
L	-	Pump live wire (brown)
	-	Pump earth (yellow/green)

NB: The boiler circulating pump should not have a locked rotor current rating exceeding 2A.

Ensure connection is made such that if the cable slips in its anchorage the current carrying conductors become taut before the earthing conductor.

Optional Wiring Method:
Alternatively, the appliance may be controlled by a single 230V supply fused at 10A which is switched by external controls. This can be achieved by placing a link

wire between terminals marked PL and SL and running the single 10A switched live supply to the PL terminal. In this way the boiler pump should be wired externally to the boiler and will not enable the pump over-run facility.

3.9 EXCHANGING A BOILER

Before removing an existing boiler add Fernox Supafloc , or equivalent cleaning agent, in accordance with the manufacturers instructions. Open all radiator valves and fire the boiler. When the system is fully heated, shut off the gas supply and drain down the central heating system.

Important

The Keston condensing boiler contains components which could be damaged or blocked by grease, dirt or solder etc. It is essential that sludge or scale is removed from an existing system.

The guarantee provided with the Keston 130 does not cover damage caused by system debris or sludge.

Connect the new boiler as instructed in this manual and fit in accordance with Sections 3.1 to 3.8

For sealed systems, fill to a pressure of about 2.7 bar. Check the complete system for water soundness. If leaks need to be rectified using flux or solder the system must be flushed cold again before proceeding.

Reduce the pressure to the Initial System Design Pressure for sealed systems, if applicable. Vent the system.

Gas Supply

The complete gas installation up to the boiler service cock must be checked for soundness. BS 6891.

Electrical Installation

Carry out preliminary electrical safety checks, i.e. Earth continuity, Polarity, Resistance to Earth, Short Circuit using a suitable test meter.

Initial Firing

The gas pressure setting is factory adjusted to within the required range and should not normally need re-adjustment. If the reading is incorrect then check such factors as soundness of the air and flue pipe joints, pressure sensible joints and the gas inlet pressure (20 mbar required). If all joints are sound and the gas inlet pressure is satisfactory set the gas pressure. Full details of this procedure are given in Section 4.7 Checking The Gas Pressure. This will ensure that combustion is good enough to allow combustion fine tuning to take place.

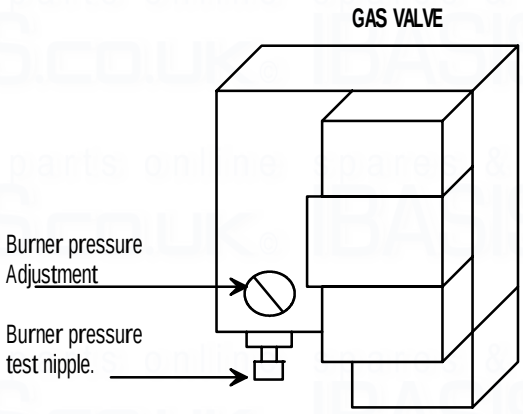

Combustion Fine Tuning

It is advisable on all installations that the combustion quality is checked by measuring the carbon dioxide (CO_2), or oxygen (O_2), level. This procedure is detailed in Section 4.9 Combustion Fine Tuning. Badly tuned combustion will lead to reduce the life of the boiler and invalidate the warranty.

4. COMMISSIONING OF THE BOILER

Important:
This condensing boiler contains components which could be damaged or blocked by grease, dirt, solder etc., from the water system. The following commissioning procedures must be followed precisely.

4.1 INITIAL FLUSHING

All waterways within the Keston are either copper or high alloy stainless steel. As a result standard water treatment chemicals for conventional central heating boilers are suitable. In any event reference must be made to BS 7593 : Treatment Of Water In Hot Water Central Heating Systems.

a. Disconnect the boiler from the system at the flow and return connections and temporarily link the flow and return pipes on the system.

b. Flush the entire system until clean water is discharged, free from dirt, flux, solder etc. The use of a flushing chemical is recommended, e.g. Fernox Supafloc.

Sludge and scale must be removed from an existing system. Boiler failure due to system debris or sludge shall invalidate the guarantee.

c. Connect the system to the boiler and fill in accordance with Section 2.7 - Water Systems. At this stage, for sealed systems, fill to a pressure of about 2.7 bar.

d. Check the complete system for water soundness. If leaks need to be rectified using flux and solder, the system must be flushed cold again before proceeding.

e. Reduce the pressure to the Initial System Design Pressure for sealed systems, if applicable. Vent the system

4.2 GAS SUPPLY

The complete gas installation up to the boiler service cock must be checked for soundness. BS 6891.

4.3 ELECTRICAL INSTALLATION

Carry out preliminary electrical safety checks, i.e. Earth continuity, Polarity, Resistance to Earth, Short Circuit using a suitable test meter.

4.4 LP GAS CONVERSION

All Keston condensing boilers are built and shipped as natural gas fired units. Field conversion kits are available to convert Keston condensing boilers to use LPG. Suitable instructions are supplied with the LPG field conversion kits.

4.5 INITIAL FIRING

Important
Checking the gas pressure to the pre-mix burner requires a special procedure, outlined below, which must be carried out.

a. Purge the gas supply in accordance with BS 6891.

b. Vent the water system.
Important:
The Keston heat exchanger consists of a single coil which can trap an air pocket. Great care must be taken to ensure that water flow has been established through the heat exchanger and thus ensuring no air pockets remain in the heat exchanger and pipe work. Firing the boiler while an air pocket exists in the heat exchanger could damage it.

c. Turn the gas service cock to ON.

d. Turn on the electrical supply, setting any external controls to call for heat.

e. Set the boiler On/Off switch to “ON”. The amber light will illuminate on the On/Off switch, the red “lockout” light will illuminate, the blower and pump will start and, after about 15 seconds, a spark will light gas at the main burner, provided all air has been purged from the gas supply to the boiler. When the burner is lit and the boiler is operating normally the green (run) lamp, the upper lamp adjacent to the flame symbol, will also be illuminated indicating successful ignition (If it does not and the green lamp is extinguished after 10 seconds, air is indicated - turn off and repeat the procedure).

If ignition does not occur, the green (run) lamp, the upper lamp adjacent to the flame symbol, will be extinguished and, at approximately 1 minute intervals, the electronic ignition system will make two further attempts to light the burner.

If the ignition is successful and the boiler is operating normally, the green (run) lamp, the upper lamp adjacent to the flame symbol, and the red (lockout) lamp will be illuminated simultaneously.

If after three automatic attempts the boiler still fails to ignite, the green (run) lamp, the upper lamp adjacent to the flame symbol, will be extinguished and the red (lockout) lamp will remain illuminated.

If, after five manual attempts (to allow for purging of any air in the gas line), the boiler still fails to ignite (indicated by the red (lockout) lamp) refer to Section 5.2 - Fault Finding Flow Chart.

f. **Check for gas soundness between the gas service cock and connection to the burner manifold.**

4.6 HOT FLUSHING

a. Allow the system to heat up, checking for water soundness.

b. Follow instructions provided with the cleaning agent, ie Fernox Supafloc. Turn off the boiler and flush the water system while still hot. Thoroughly flush the system with clear water.

c. Refill the system using a quality water treatment such as Fernox MB1. For sealed systems, fill to the required Initial Design Pressure.

4.7 CHECKING THE GAS PRESSURE

With the boiler running measure the burner pressure at the burner pressure test nipple.

The gas setting is factory adjusted to within the required range and should not normally need re-adjustment unless the unit has also been converted to LPG as part of the installation. If the reading is incorrect then check such factors as soundness of the air and flue pipe joints and the gas inlet pressure (20 mbar required). If all joints are sound and

the gas inlet pressure is satisfactory remove the brass dust cap covering the burner pressure adjustment screw on the gas valve (See fig. 4.7). Set the gas pressure to the required value as stated on the databadge by turning the exposed burner pressure adjustment screw (clockwise will increase burner pressure, anti-clockwise will decrease burner pressure). This will ensure that combustion is good enough to allow combustion fine tuning to take place. Replace the brass dust cap to cover the burner pressure adjustment screw.

Fig 4.7
GAS VALVE

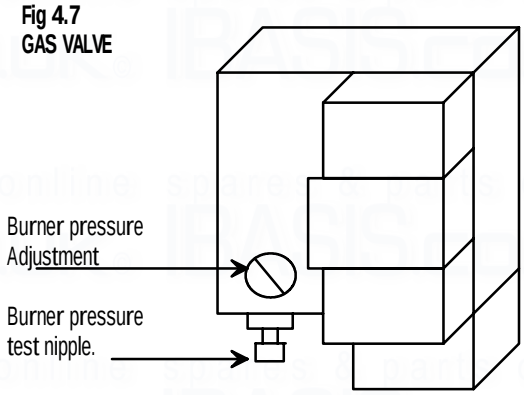

4.8 TIMING THE GAS METER - NATURAL GAS

After the boiler has been started, and with no other appliances using gas, time the gas meter to be certain that the unit is running at the proper gas input. Determine the cubic feet of gas passing through the meter and determine the input in Btu per hour. Input must be within plus or minus 3% of the rated input.

Time, in seconds, the time taken to pass 2 cubic feet of gas through the meter (ie one revolution of a 2 cu ft dial) or 0.1 cubic metres if the meter is of the new metric digital type. The Keston 130, when correctly set, should take 51.8 seconds for 2 cubic feet of natural gas and 91.5 seconds for 0.1 cubic metres of natural gas (assuming 1038 btu/h per cubic foot). Adjust the gas valve screw clockwise to increase the input (speed up the meter) or anticlockwise to decrease the input (slow down the meter) accordingly.

4.9 COMBUSTION FINE TUNING

Although the gas pressure is preset at the factory differing flue arrangements may require fine tuning of the gas pressures to produce the best combustion and ensure long burner life. It is advisable to check proper combustion by measuring gas input and the level of carbon dioxide, or oxygen, in the flue outlet from the boiler. Overfiring or underfiring the burner will reduce the longevity of the appliance.

Carbon dioxide is a colourless, odourless gas produced by all combustion processes. When the Keston condensing boiler is operating properly carbon dioxide (CO_2) levels will be between 8.2 and 8.9% CO2 for natural gas.

To measure CO2 levels in the Keston boiler remove the 1/8" plug from the flue outlet pipe inside the boiler (Figure 5.7.2 item 69). Insert the probe of a combustion analysis meter and sample the gases as instructed in the test equipment's instructions.

If the CO2 levels need raising increase the gas output by turning the brass screw, under the metal cap in the front of the gas valve, clockwise. Reduce CO2 levels by turning this screw anti-clockwise.

If CO2 levels do not respond to adjustments the burner is probably running with too much gas pressure. If, for instance, a clockwise adjustment to the brass screw in the gas valve produces a decrease in CO2 the burner is too fuel-rich and not enough oxygen is present for proper and complete combustion.

4.10 HANDING OVER TO THE USER

It is important to fully explain the following :

a. Procedure to light and turn off the boiler, including isolation of the electrical supply if necessary.

b. The function of the lockout feature must be explained :
If the red light only is illuminated for more than four minutes, this means that the boiler has failed to light. Turn off the electrical supply and wait 20 seconds. Turn ON again and wait.
   i) If lockout recurs immediately then the gas supply should be checked as ON, otherwise consult a Service Engineer.
   ii) If it is not possible to relight, the boiler must be isolated and a Service Engineer called in to rectify the fault.

c. Advise that a reduction in the water pressure reading on the gauge, for sealed systems, indicates a leak which should be rectified before further use.

d. Advise that the appliance should be serviced by a competent person at least once a year.

e. Advise on frost precautions.

f. Hand over User Instructions.

5. FAULT FINDING

5.1 ELECTRICAL CONTROL SEQUENCE

When the external controls are calling for heat, power will be fed to the boiler connection strip at terminals PL (Permanent Live), SL (Switched Live) and N (Neutral). If the ON/OFF switch is also in the ON position the boiler ON lamp (amber) will be illuminated. Provided all temperature thermostats and pressure switches are closed, power will be fed to pins 1 & 2 on the control box, initiating the following sequence.

(1) The boiler lockout lamp (red) will be illuminated

(2) The fan will start.

(3) When the fan reaches running speed, the Air Pressure switch, normally open, will close which will start the ignition sequence.

(4) After a pre-purge period of about 15 seconds, the gas valve will open to allow gas to mix with the air at the suction side of the fan and the ignition spark will occur at the main burner.

(5) When the burner ignites, the flame is detected by the control box through the combined flame sensor/ignitor and the ignition spark is stopped. Both the lockout lamp (red) and the boiler run lamp (green), the upper lamp adjacent to the flame symbol, will be illuminated. The boiler is now in its normal run condition.

(6) The burner will continue to operate until the gas valve interrupts the gas supply. The gas valve will be closed by the control box if power is interrupted to the boiler by any external control or the boiler thermostat. If an interruption to the gas supply causes loss of the flame, the control box will pause for approximately 10 seconds and then attempt to re-ignite the unit. If this attempt fails, i.e. due to continued lack of gas supply, the boiler will make two further attempts to ignite at intervals of approximately 1 minute and will then go to a lockout state (red lamp illuminated only). Once the gas supply has been resumed the boiler can be reset by turning the boiler off and then on again on the boiler control panel.

(7) The boiler can also be shut down by any of the flow limit, flow overheat and the flue overheat thermostats, gas low pressure switch and by the low water pressure switch.

In such an event the green (run) lamp, the upper lamp adjacent to the flame symbol, will be extinguished and only the red (lockout) lamp will be illuminated.

Any failure of the boiler to sequence in the above manner should be investigated using the following trouble shooting flow diagram.

Before attempting any electrical fault finding, always carry out preliminary electrical system checks. On completion of any service/fault finding task which has required the breaking and remaking of electrical connections, the checks, earth continuity, polarity, short circuit, resistance to earth must be repeated.

5.2 FAULT FINDING FLOW CHART

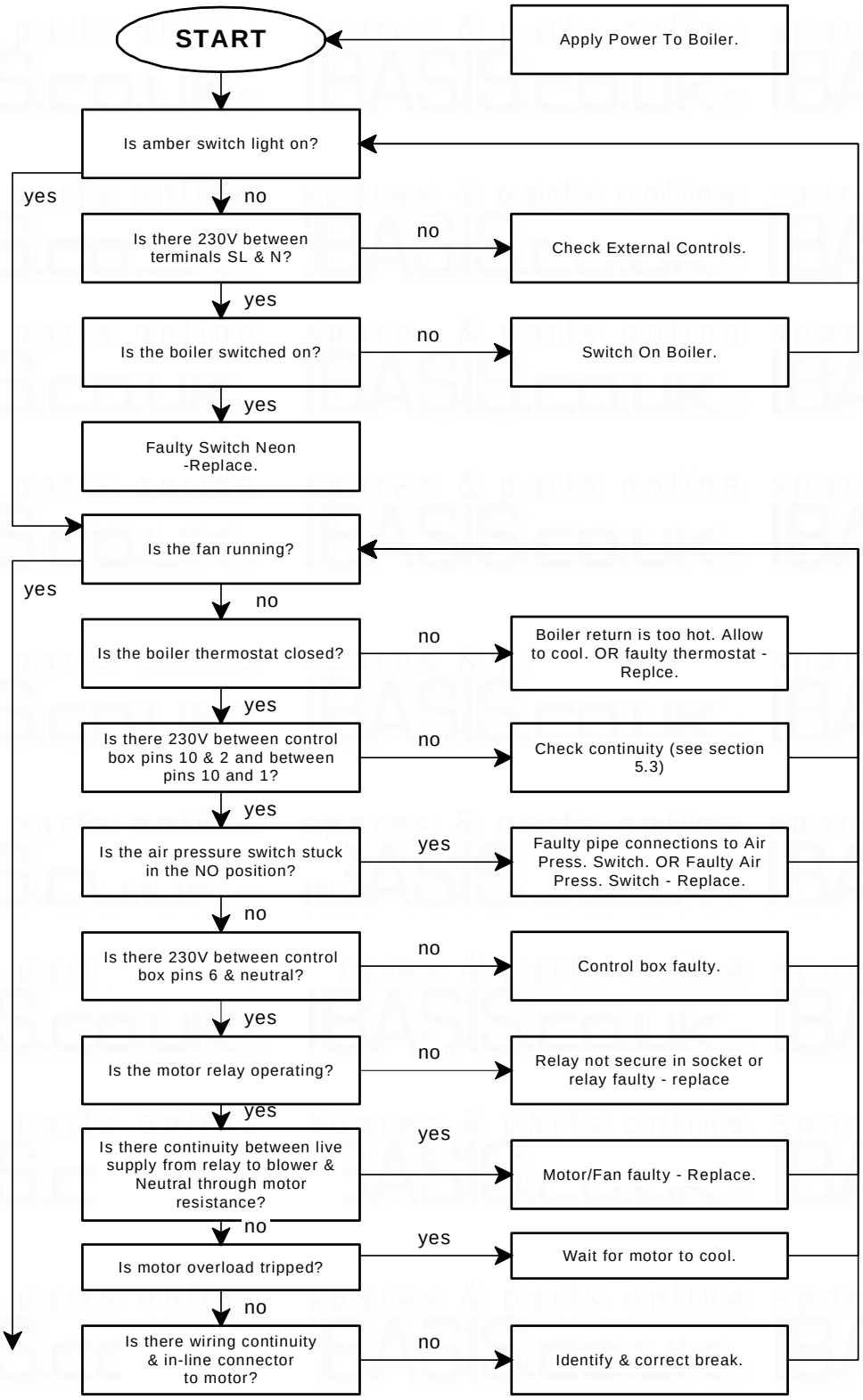

Continued on sheet 2

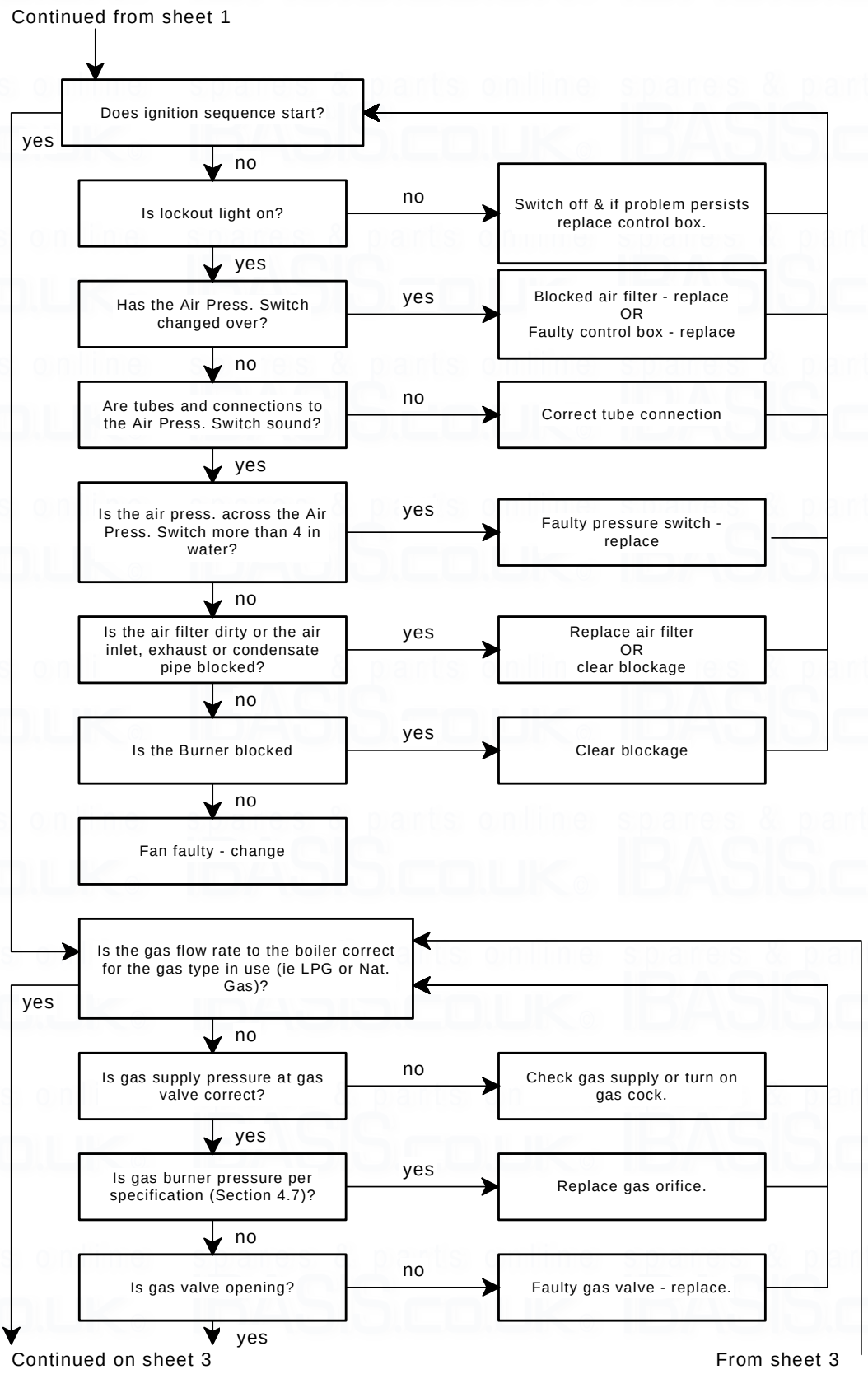
Continued from sheet 1
Does ignition sequence start?
yes
no
Is lockout light on?
no
Switch off & if problem persists replace control box.
yes
Has the Air Press. Switch changed over?
yes
Blocked air filter - replace OR Faulty control box - replace
no
Are tubes and connections to the Air Press. Switch sound?
no
Correct tube connection
yes
Is the air press. across the Air Press. Switch more than 4 in water?
yes
Faulty pressure switch - replace
no
Is the air filter dirty or the air inlet, exhaust or condensate pipe blocked?
yes
Replace air filter OR clear blockage
no
Is the Burner blocked
yes
Clear blockage
no
Fan faulty - change
Is the gas flow rate to the boiler correct for the gas type in use (ie LPG or Nat. Gas)?
yes
no
Is gas supply pressure at gas valve correct?
no
Check gas supply or turn on gas cock.
yes
Is gas burner pressure per specification (Section 4.7)?
yes
Replace gas orifice.
no
Is gas valve opening?
no
Faulty gas valve - replace.
yes
Continued on sheet 3
From sheet 3

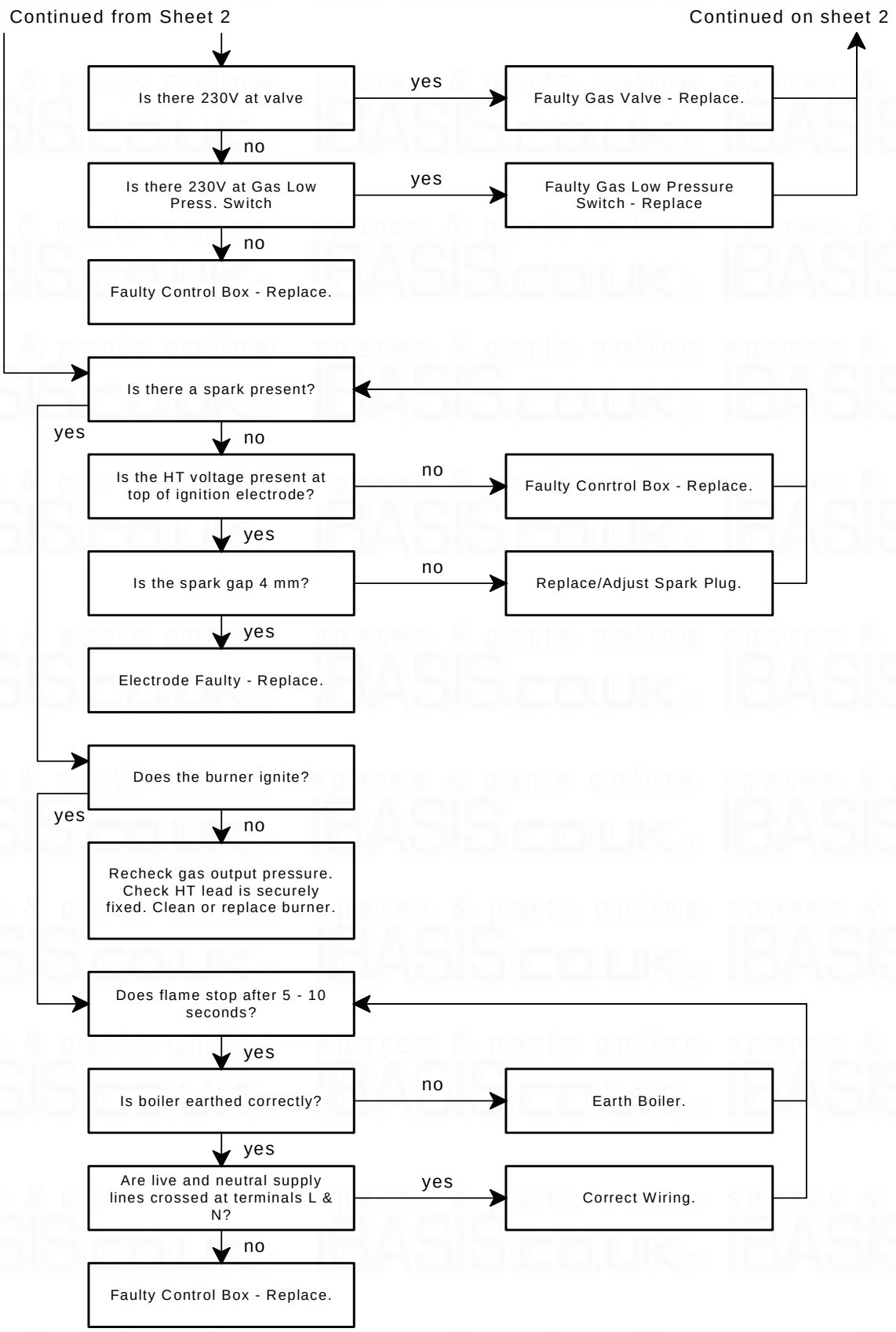
Continued from Sheet 2
Continued on sheet 2
Is there 230V at valve
yes
Faulty Gas Valve - Replace.
no
Is there 230V at Gas Low Press. Switch
yes
Faulty Gas Low Pressure Switch - Replace
no
Faulty Control Box - Replace.
Is there a spark present?
yes
no
Is the HT voltage present at top of ignition electrode?
no
Faulty Conrtrol Box - Replace.
yes
Is the spark gap 4 mm?
no
Replace/Adjust Spark Plug.
yes
Electrode Faulty - Replace.
Does the burner ignite?
yes
no
Recheck gas output pressure. Check HT lead is securely fixed. Clean or replace burner.
Does flame stop after 5 - 10 seconds?
yes
Is boiler earthed correctly?
no
Earth Boiler.
yes
Are live and neutral supply lines crossed at terminals L & N?
yes
Correct Wiring.
no
Faulty Control Box - Replace.

5.3 CONTINUITY CHECKING

To check continuity connect one probe to a neutral and use the other probe to check for 230V.

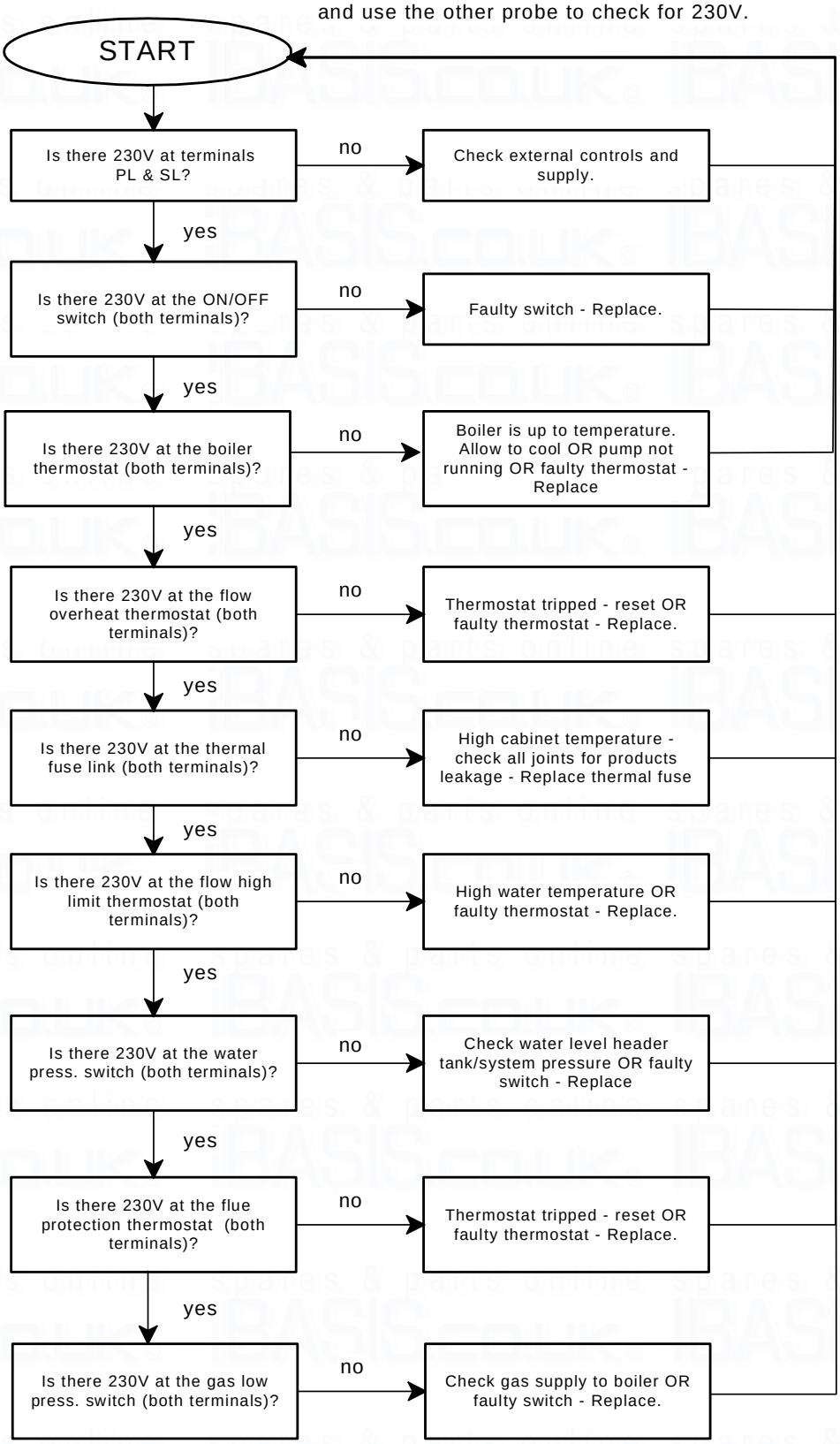

5.4 FUNCTIONAL FLOW WIRING DIAGRAM

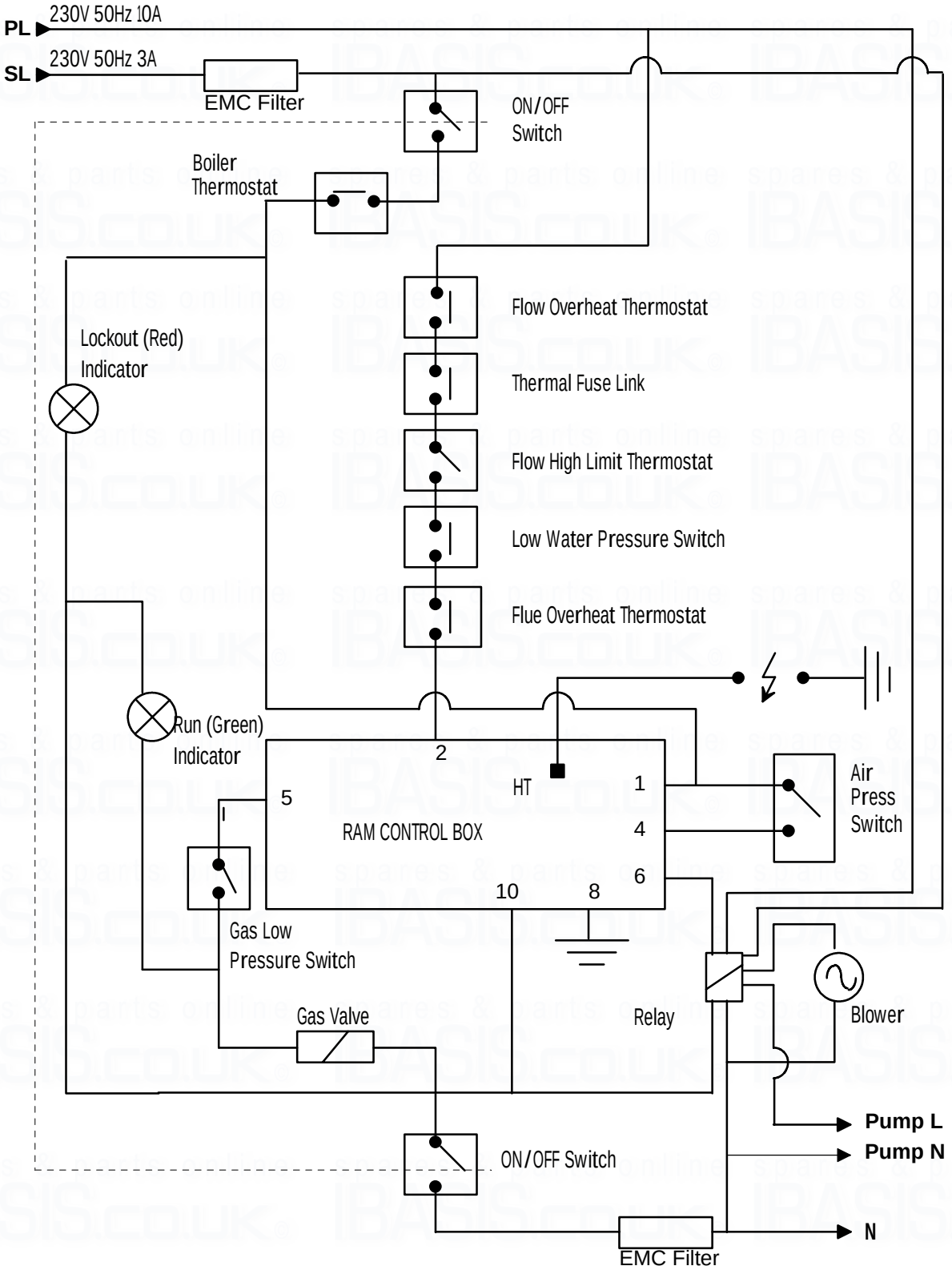

5.5 ELECTRICAL WIRING DIAGRAM

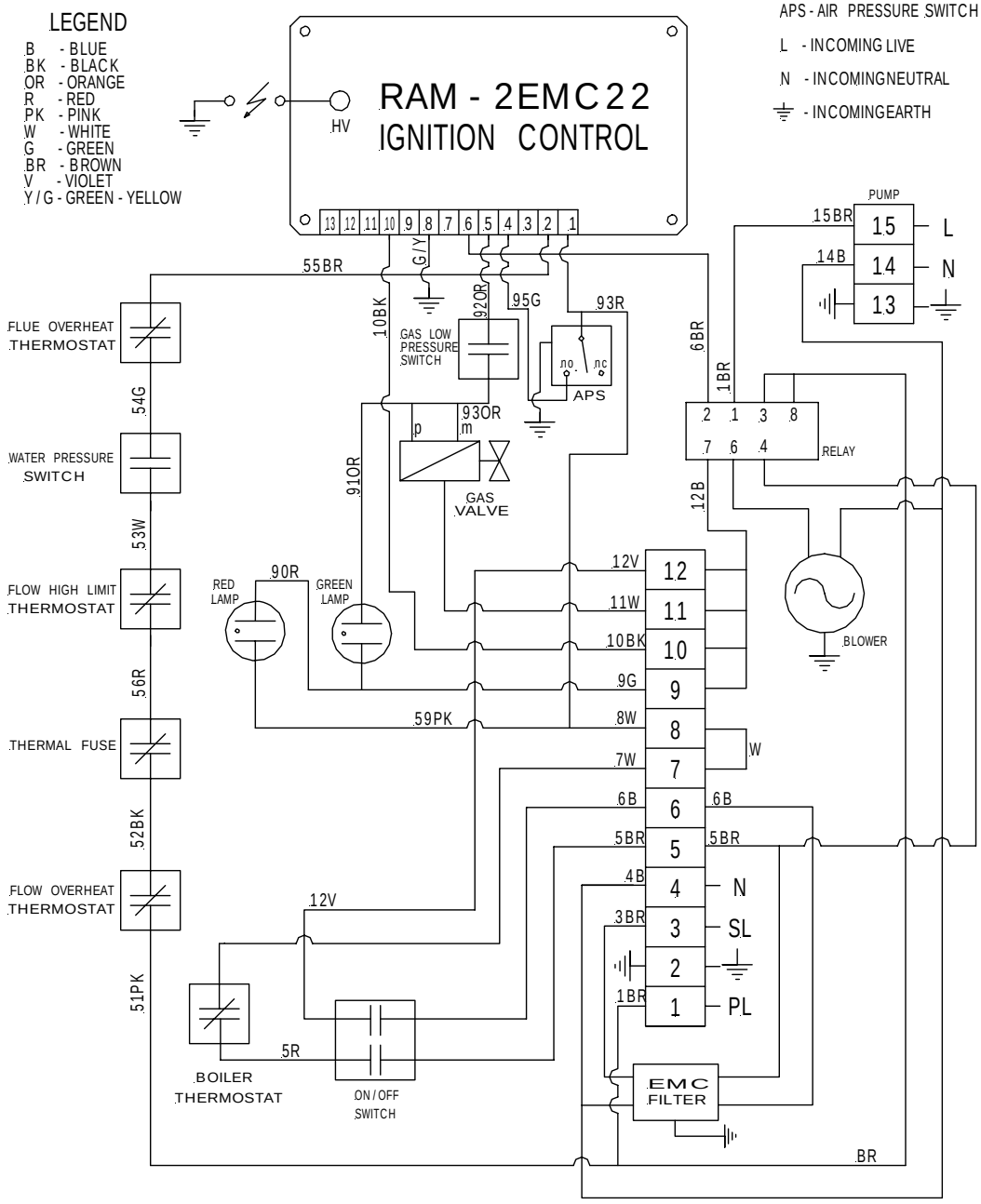

5.6 ILLUSTRATED WIRING DIAGRAM

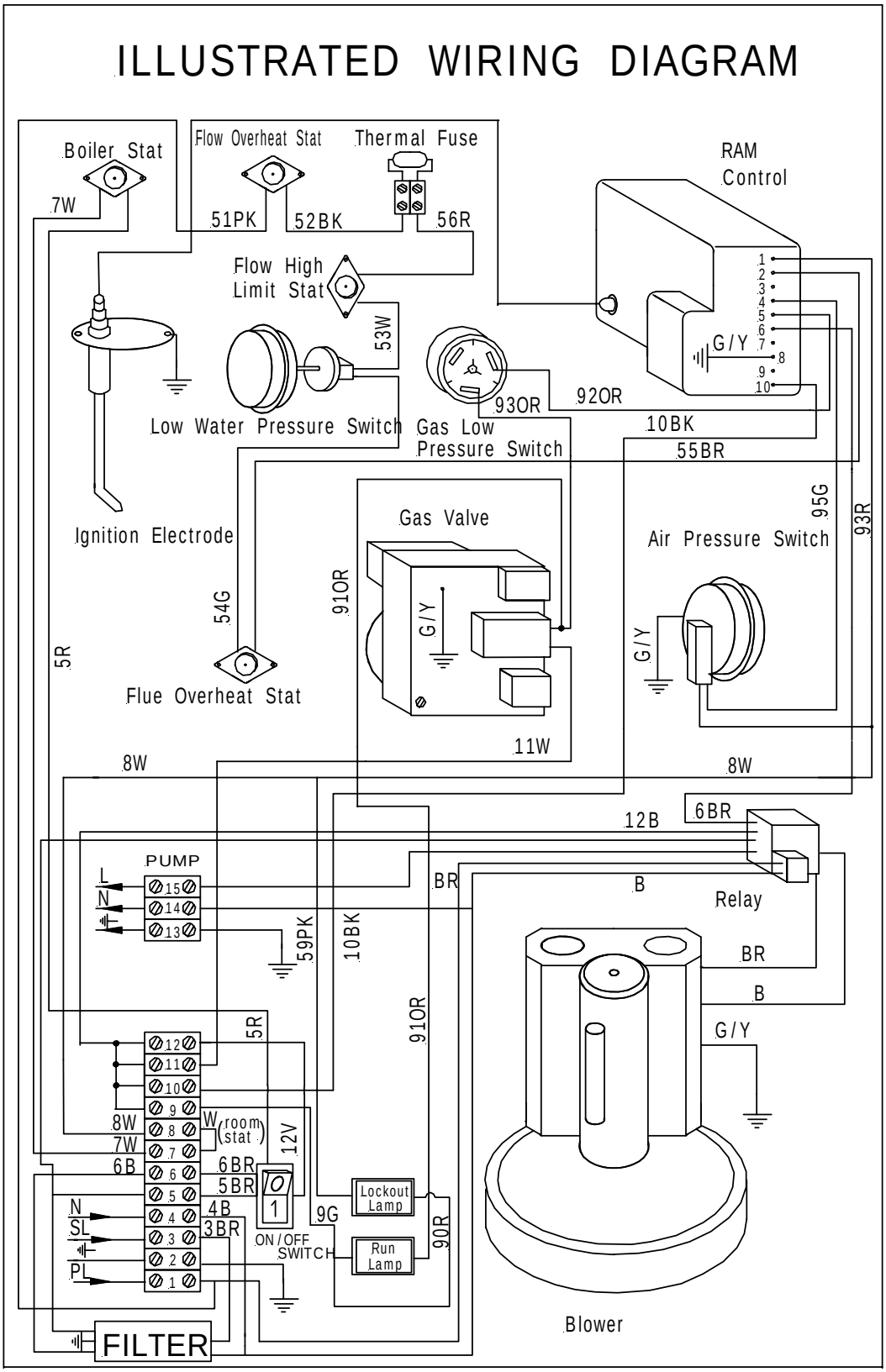

5.7 Exploded Assembly Diagrams

5.7.1 Boiler Controls Asembly

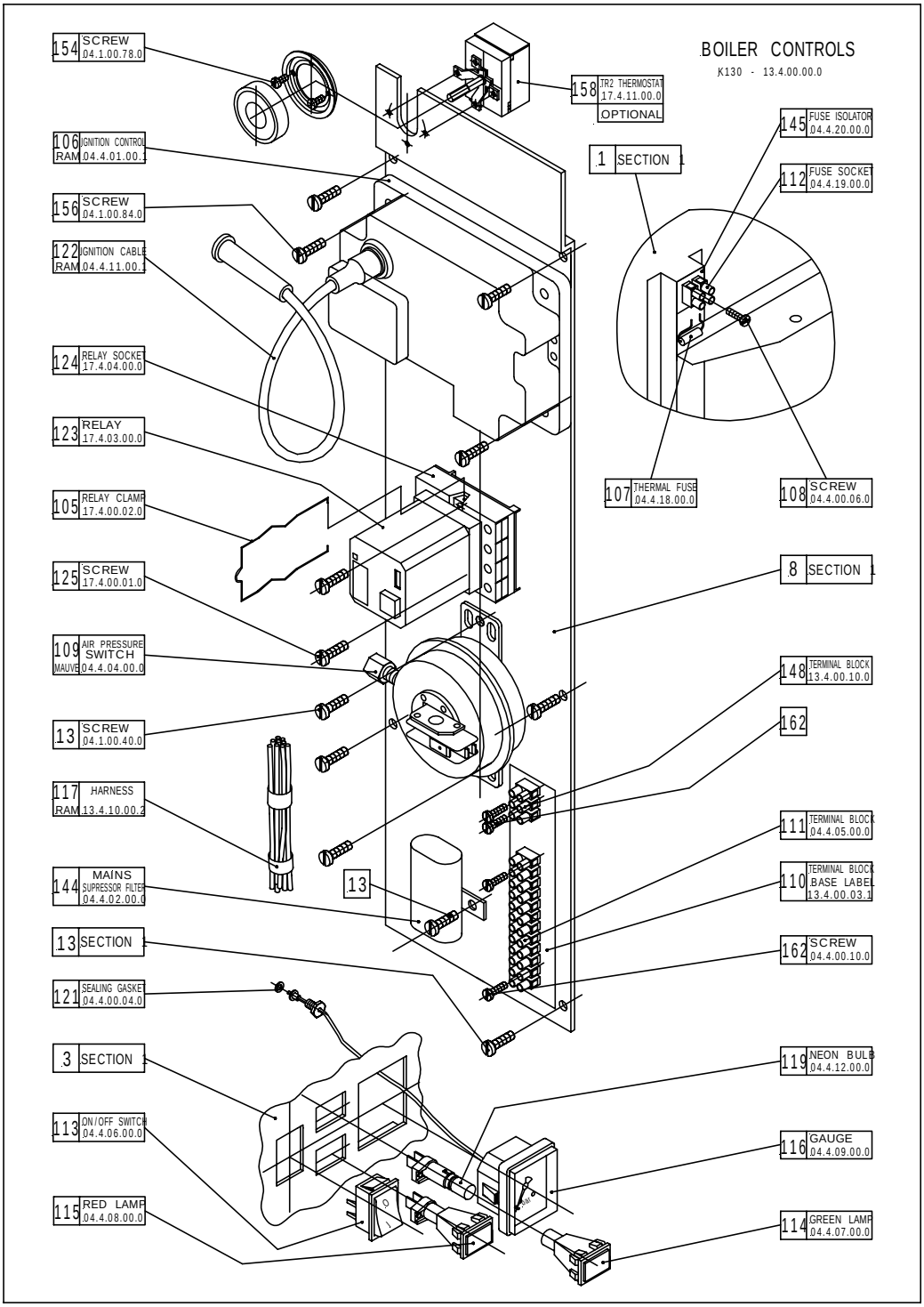

5.7.2 Waterway, Condensate & Flue Assembly

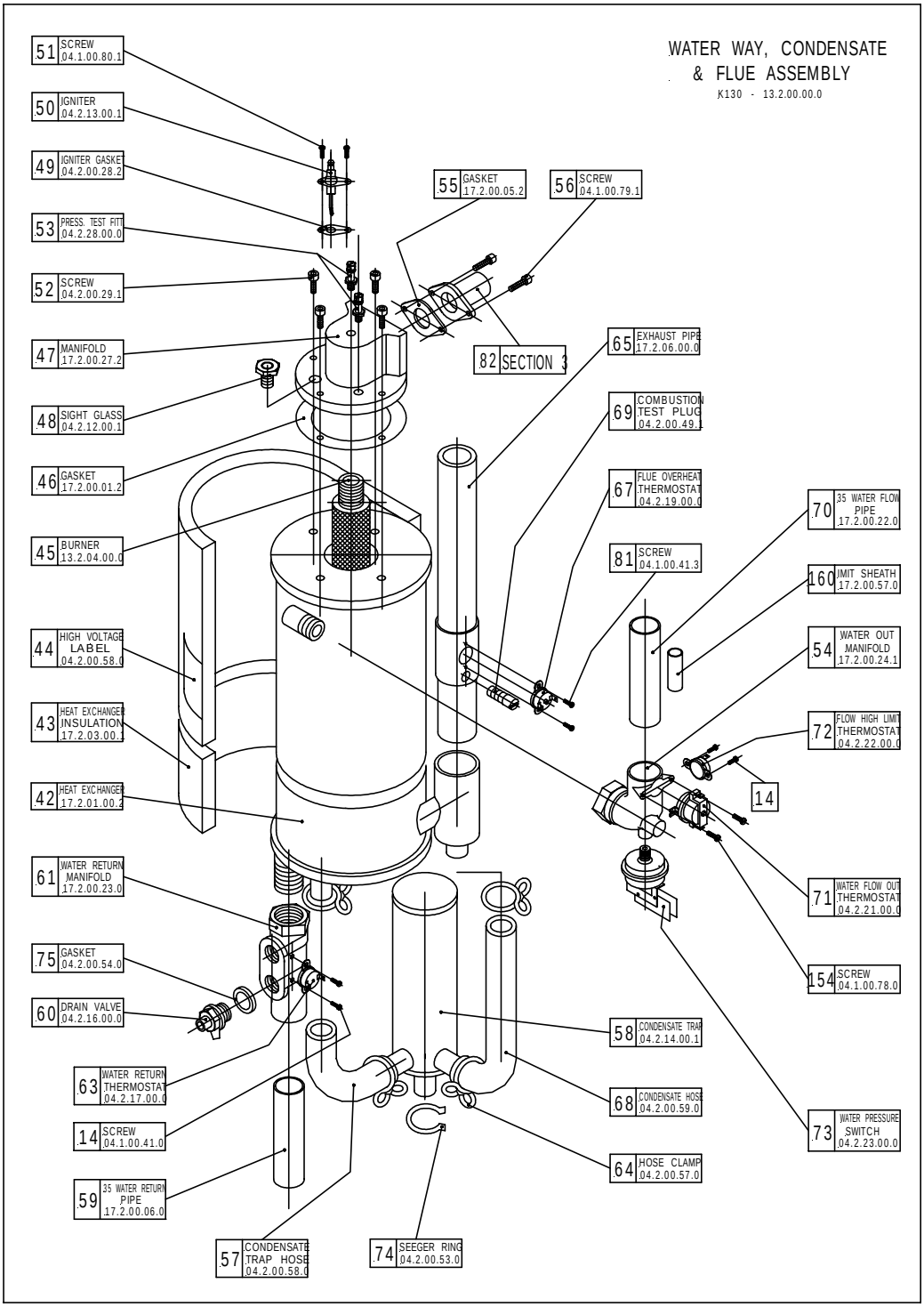

5.7.3 Air - Gas Assembly

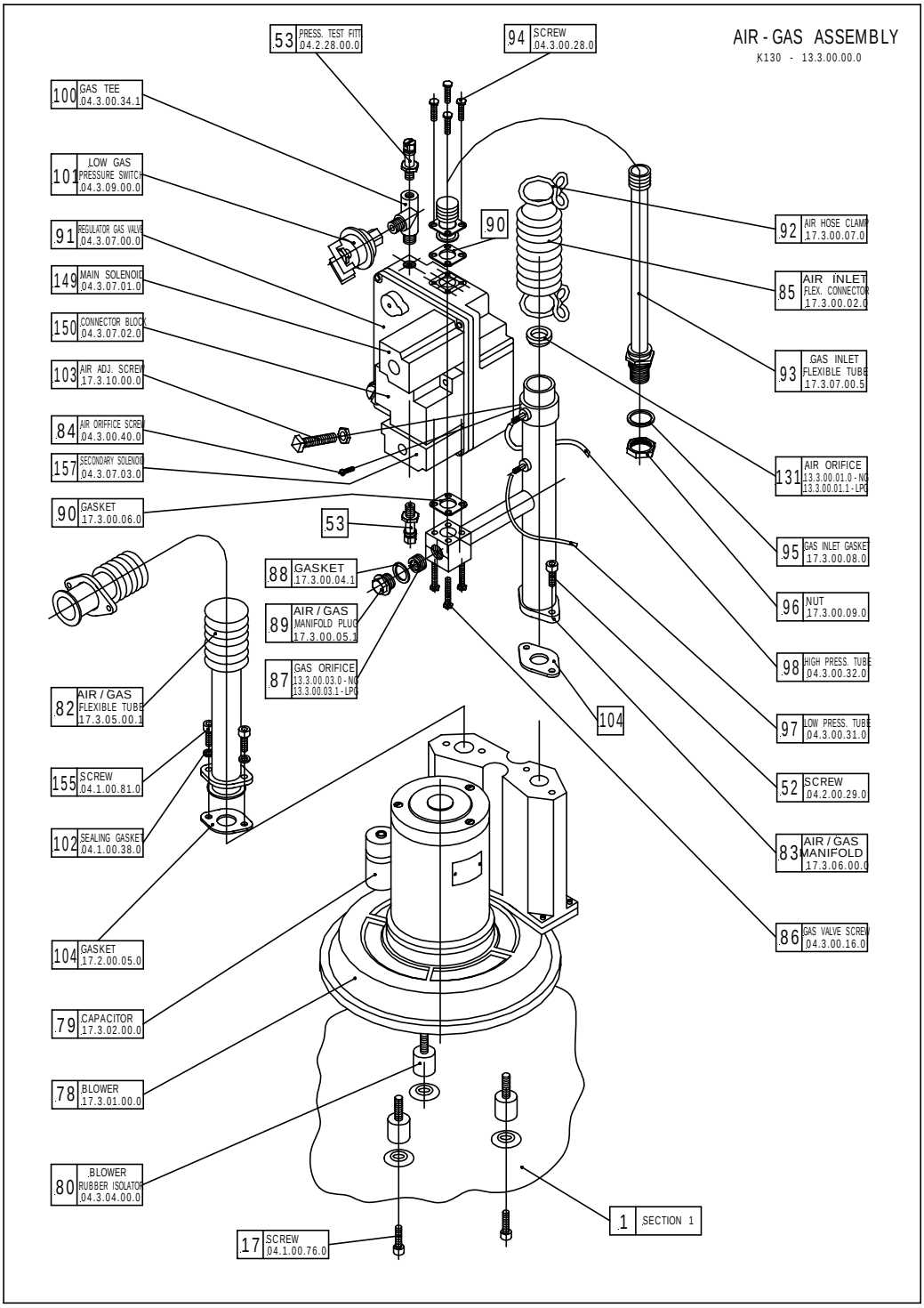

5.7.4 Casing Assembly

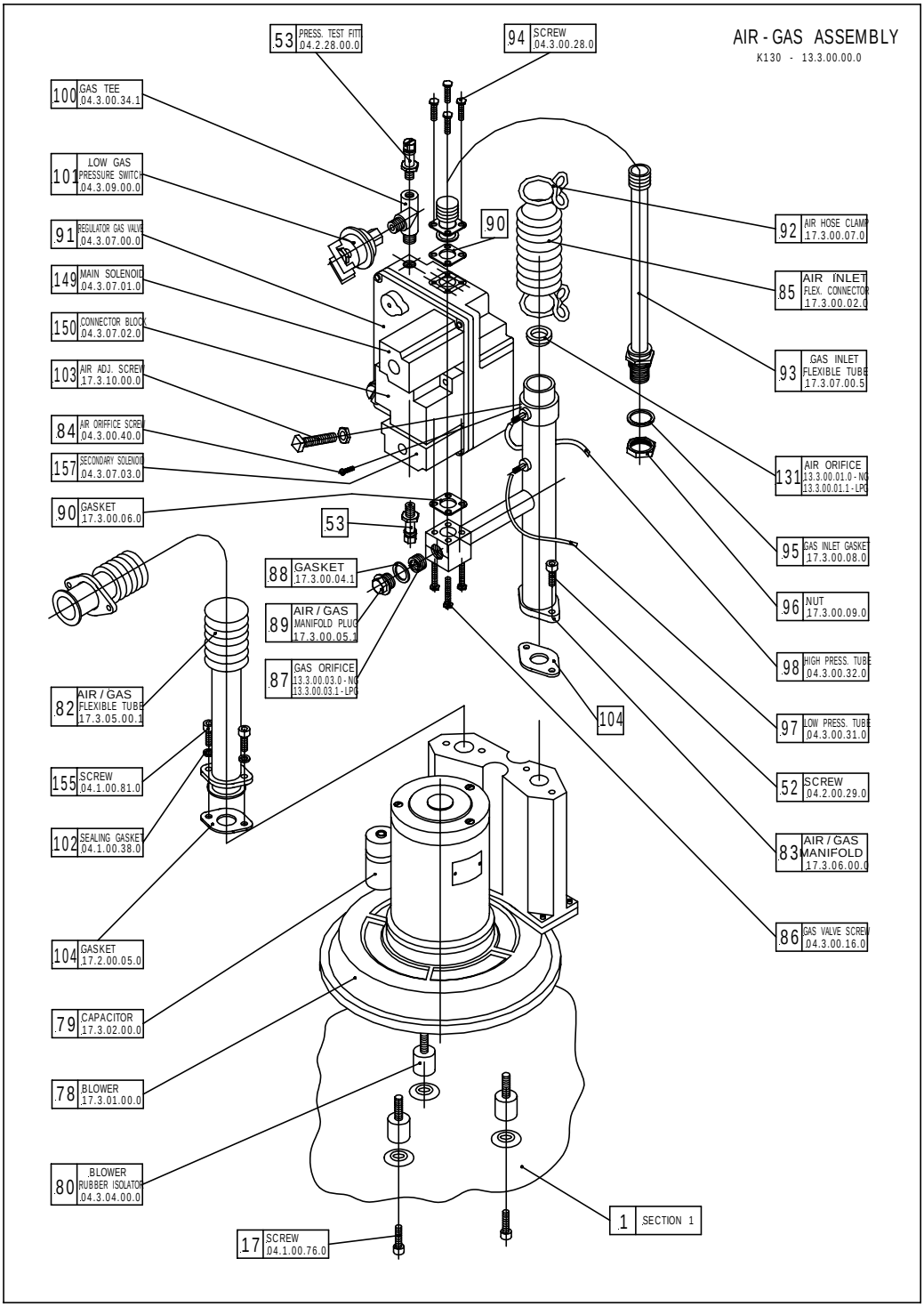

5.7.5 Exploded Diagrams Parts Reference List

Boiler Controls Assembly (Fig. 5.7.1)

GC Number	Code	Description
E01-074	106	Ignition Control Box
379 744	109	Air Pressure Switch
114 076	111	Electrical Terminal Block
114 077	113	On/Off Switch
114 078	114	Green (Run) Lamp
114 079	115	Red (Lockout) Lamp
114 080	116	Pressure Gauge

Waterway, Condensate & Flue Assembly (Fig. 5.7.2)

GC Number	Code	Description
114 115	42	Heat Exchanger
E03-886	45	Burner
114 118	46	Burner Head Gasket
114 028	48	Sight Glass
375 527	49	Ignitor Gasket
114 120	50	Spark Ignition Electrode
114 029	53	Pressure Test Nipple
114 032	58	Condensate Trap
375 530	63	Boiler Thermostat
375 532	67	Flue Overheat Thermostat
114 043	69	Combustion Test Plug
375 533	71	Flow Overheat Thermostat
375 534	72	Flow High Limit Thermostat
114 045	73	Water Pressure Switch

Air - Gas Assembly (Fig. 5.7.3)

GC Number	Code	Description
114 131	78	Combustion Blower
E03-893	131	Air Orifice - NG
E03-894	131	Air Orifice - LPG
375 536	91	Gas Valve
114 029	53	Pressure Test Nipple
114 073	101	Low Gas Pressure Switch
E03-887	87	Gas Injector - NG
E03-888	87	Gas Injector - LPG

Casing Assembly (Fig. 5.7.4)

GC Number	Code	Description
114 095	01	Cabinet
E03-884	23	Data Badge
114 099	05	Air Filter Cover
114 105	19	Air Filter
114 096	02	Cabinet Top Cover
114 100	06	Burner Access Cover Plate
E03-885	29	Illustrated Wiring Diagram
114 098	04	Front Door

6. ROUTINE (ANNUAL) SERVICING

To ensure the continued safe and efficient operation of the boiler it is necessary to carry out routine servicing at regular intervals. The frequency of the servicing will depend upon the particular operating conditions, but it is recommended that an annual service should be carried out by a qualified engineer.

The appliance has an integral air filter, mounted at the top right hand side of the boiler, to which the air intake pipe is connected. This filter should be examined every time the boiler is serviced. It may need more frequent inspection according to the condition of the atmosphere in which the air intake terminates.

Note: The air filter can be easily blocked if the boiler is running on or near a building site having an excess of airborne dust. It is essential, with a premix gas burner, that the air is clean and free of dust.

It is the law that any service work must be carried out by competent qualified persons.

6.1 Pre-Service Checks

It is recommended that an inspection should be carried out prior to shutting down the unit for servicing. Remove the front cover by removing the screws retaining the top of the door and lifting the cover from the base (Front cover located by two pegs). The following items should be observed:

a. Smooth starting and running of the blower.
b. Smooth lighting of the burner.
c. Check for leakage of gas, gas/air or combustion products.
d. Check for condensate leaks.
e. Check the colour and appearance of the flame. A sky blue flame slightly off the burner gauze is normal. The burner itself should appear dark. Any glow on the burner indicates gauze blockage requiring cleaning, an incorrect gas flow or an air intake blockage.
f. Check that the temperature differential between the flow and return pipes is less than 15°C. The temperature difference should be between 10°C and 15°C.
g. Check for water soundness.
h. Inspect the flue vent and air intake pipework. Joints must be sound and all pipework well bracketed.
i. Check that there is a steady fall back to the boiler from the flue pipe to allow condensate to run back into the boiler (See Section 2.8.3 Slope).
j. With the boiler operating at a low return temperature (i.e. less than 50°C) check that the condensate flows freely from the condensate line.

6.1.1 Burner & Heat Exchanger Blockage Checks

i) Turn off the boiler & shut off the gas supply to the boiler.

ii) Remove the pressure point screws from points A & B. Attach a differential gauge.

iii) Turn on the boiler and wait for the fan to reach full speed. Obviously the burner will not light.

iv) The pressure difference should be between 10 mbar and 14 mbar (lowest value represents a new appliance). If not clean the burner.

v) Turn off the electrical supply to the boiler.

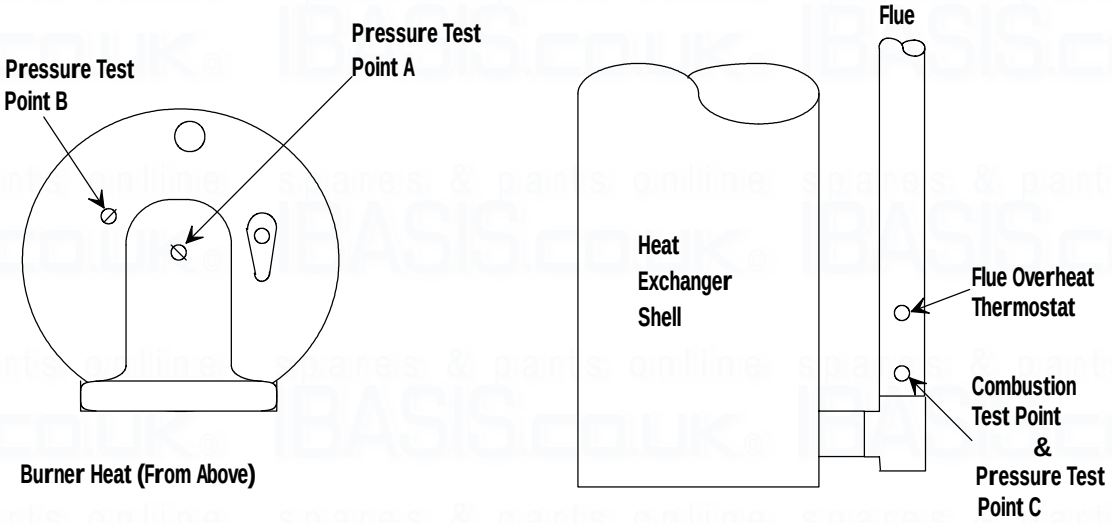

Fig 6.1.1 Pressure Test Point Locations

vi) Remove the pressure point screw from point C and transfer the tube from point A to C, replacing the screw on point A.

vii) Turn on the electrical supply to the boiler (gas still off), wait for the fan to reach full speed.

viii) The pressure difference should be between 9.5 mbar and 13.5 mbar (lowest value represents new appliance). If not clean heat exchanger.

ix) Disconnect the gauge from point B. Refit the screw.

x) Read pressure of point C.

xi) The maximum pressure should be 3.5 mbar. If the pressure is greater than this check the flue for blockage.

xii) Turn off the electrical supply to the boiler.

xiii) Remove the pressure gauge tube and refit the screw.

xiv) Open the gas service cock.

6.2 Recommended Routine Service

a. Inspect the air filter located at the top right hand side of the boiler. Release the toggle catch on the filter tray and remove the filter.

If the filter looks dirty remove the dirt with a vacuum cleaner or by other means. If in any doubt renew the filter element.

b. Remove the burner head (Section 7.7) and inspect the burner appearance. Black markings or other discolourations on the gauze indicate too much gas or a lack of air possibly due to a blocked air filter. Any breakages or damage to the burner mesh indicate the burner must be replaced.

c. If necessary, either due to discolouration or a high pressure differential between points A & B in the pre-service checks, clean the burner with a mild household detergent and rinse under a hot running tap.

d. If necessary, either from visual inspection or a high pressure differential between points B & C in the pre-service checks, clean the heat exchanger using a suitable stiff plastic bristle brush, vacuum out any large particles and flush the heat exchanger with fresh water until the water flowing from the condensate drain is clear. When brushing the heat exchanger take care not to damage the condensing plug in the lower half of the heat exchanger.

e. Remove the condensate trap (Section 7.10) and clean by flushing through with clean running water.

f. Check the electrode mounted on the burner head. If the point is damaged or burnt replace it.
Check that the spark gap measures 4 mm.

g. Replace the burner head, renewing the gasket if necessary, and reconnect the gas/air supply and the ignition lead. Ensure the flanged gas/air supply joint is air tight.

h. Turn on the electrical supply to the boiler and allow the boiler to reach operating temperature levels.

i. Visually inspect the burner through the glass spy hole at the burner head (a small mirror will prove useful).

j. Recheck the burner pressure by following the procedure detailed in Section 4.7

k. Remove the combustion test point plug from the flue pipe. This is situated around 150mm (6ins) from the bottom of the flue elbow at its connection to the heat exchanger.

l. Using an approved combustion tester sample the flue products via the combustion test point. CO_2 levels of between 8.2% and 8.9%, for natural gas, should be observed. If such levels are not observed tune the combustion as described in Chapter 4 - Commissioning. Also check the gas flow as detailed in Sections 4.8 and 4.9

m. Replace the combustion test point plug.

n. Check all joints for soundness up to the gas burner.

7. REPLACEMENT OF PARTS

INDEX

7.0 GENERAL
7.1 PRECAUTIONS
7.2 ACCESS
7.3 PROCEDURES - GENERAL
7.4 ELECTRICAL
- 7.4.1 ON/OFF SWITCH
- 7.4.2 BOILER THERMOSTAT
- 7.4.3 NEONS
- 7.4.4 FLOW OVERHEAT, FLOW HIGH LIMIT & FLUE PROTECTION THERMOMSTATS
- 7.4.5 WATER PRESSURE SWITCH
- 7.4.6 IGNITION CONTROL BOX
- 7.4.7 AIR PRESSURE SWITCH
- 7.4.8 COMBUSTION BLOWER
- 7.4.9 GAS CONTROL VALVE
- 7.4.10 GAS LOW PRESSURE SWITCH

7.5 GAS ORIFICE
7.6 SPARK IGNITION/FLAME DETECTION ELECTRODE
7.7 BURNER HEAD & BURNER
7.8 HEAT EXCHANGER
7.9 AIR FILTER
7.10 CONDENSATE TRAP
7.11 PRESSURE GAUGE
7.12 SIGHT GLASS
7.13 HT IGNITION LEAD
7.14 AIR ORIFICE

7.0 GENERAL

The following must always be carried out by a competent/qualified person.

7.1 PRECAUTIONS

i) Always switch off the mains electricity supply and disconnect the plug at the isolating switch and socket. (If a switch only is used then remove the fuse.)

ii) Gain access to the appliance (Section 7.2) and turn off the gas supply at the appliance service cock.

WARNING : Parts of the boiler internal wiring will remain live even after turning the boiler ON/OFF switch to the OFF position. Shut off the power supply at the isolating switch before working on the appliance.

7.2 ACCESS

i) Remove the front door by removing the three screws to the front of the top panel. The front panel may then be removed by tilting forward and lifting vertically to disengage the two locating studs in the base of the front panel.

ii) Access to the burner head can be gained by removing the access plate in the top panel of the appliance.

iii) Access to the rear of the control panel and base of the unit can be gained by removing the control panel at the bottom of the boiler. Remove the two screws to the control panel then gently pull the control panel free of the boiler casing. This is secured by three press studs, two on either side and a central press stud at the bottom of the control panel.

7.3 REPLACEMENT PROCEDURES

i) Always replace in the reverse order unless otherwise stated.

ii) Electrical connections must be remade in accordance with the Wiring Diagram (Section 5.5).

iii) Test the soundness of any gas carrying or water carrying joint broken during the service procedures.

7.4 ELECTRICAL COMPONENTS

7.4.1 On/Off Switch (Fig. 5.7.1 item 113)

i) Isolate the appliance (Section 7.1)
i) Gain access (Section 7.2)
iii) Remove the push on connectors from the switch taking note of the correct positions.
iv) Press in the catches and push the switch forwards through the control panel.
v) Reassemble (Section 7.3)
v) Check for correct operation of the switch.

7.4.2 Boiler Thermostat (Fig. 5.7.2 item 63)

i) Isolate the appliance (Section 7.1)
ii) Gain access (Section 7.2)

iii) Remove the push on connectors from the thermostat taking note of the correct positions.
iv) Unscrew the two retaining screws and remove the thermostat.
v) Reassemble (Section 7.3)
NB: When fitting the new thermostat it is an advantage to smear a thin film of heat sink compound between the thermostat and plate. This, combined with fitting the new thermostat tightly to the plate, ensures a good contact.

7.4.3 Neons (Fig. 5.7.1 items 114 & 115)

i) Isolate the appliance (Section 7.1)
ii) Gain access (Section 7.2)
iii) Remove the push on connectors from the neon taking note of the correct positions.
iv) Press in the catches and push the neon forward through the control panel.
v) Pull the centre core of the neon from its housing to expose the bayonet fitting bulb.
vi) Reassemble (Section 7.3)
vii) Check for correct operation of the neons.

7.4.4 Flow Overheat (Fig. 5.7.2 item 71) **, Flow High Limit** (Fig. 5.7.2 item 72) **& Flue Protection Thermostats** (Fig. 5.7.2 item 67)

i) Isolate the appliance (Section 7.1)
ii) Gain access (Section 7.2)
iii) Remove the push on connectors from the thermostat taking note of the correct positions.
iv) Unscrew the two retaining screws and remove the thermostat.
v) *Flue protection thermostat only*
The thermostat seal is maintained via a small stainless steel disc between thermostat and flue pipe. It is advised to use a small quantity of leak sealant around the edge of the steel disc to prevent condensate leakage from the flue.
vi) Reassemble (Section 7.3)
NB: When fitting the new thermostat it is an advantage to smear a thin film of heat sink compound between the thermostat and plate. This, combined with fitting the new thermostat tightly to the plate, ensures a good contact.

7.4.5 Water Pressure Switch (Fig. 5.7.2 item 73)

i) Isolate the appliance (Section 7.1)
ii) Shut off the water supply to the appliance.
iii) Gain access (Section 7.2)
iv) Drain the system to below the level of the appliance using the drain off tap at the base of the heat exchanger.
v) Remove the push on connectors from the water pressure switch taking note of the correct positions.
vi) Unscrew the pressure switch.
vii) Reassemble (Section 7.3).
NB: Use a little jointing compound or PTFE tape on the thread.
viii) Refill the system (See Section 4 - Commissioning).

7.4.6 Ignition Control Box (Fig. 5.7.1 item 106)

i) Isolate the appliance (Section 7.1)
ii) Gain access (Section 7.2)

iii) Remove the HT ignition lead.
iv) Pull off the multi-pin connector away from the box.
v) Unscrew the two screws securing the control box to the casing and remove the box.
vi) Reassemble (Section 7.3)

7.4.7 Air Pressure Switch (Fig. 5.7.1 item 109)

i) Isolate the appliance (Section 7.1)
ii) Gain access (Section 7.2)
iii) Remove the push on connectors from the air pressure switch taking note of the correct positions.
iv) Disconnect the union to one plastic tube connection and pull off the second plastic tube from the air pressure switch.
v) Unscrew the two screws mounting the air pressure switch body to the boiler casing.
vi) Reassemble (Section 7.3)
NB: Ensure the yellow/green earth connection tag is securely fixed behind the lower mounting screw.

7.4.8 Combustion Blower (Fig. 5.7.3 item 78)

NB: This unit is heavy and must therefore be handled carefully when replacing.
i) Isolate the appliance (Section 7.1)
ii) Gain access (Section 7.2)
iii) Disconnect the wires connecting the blower to the relay and pump terminal strip (relay terminal number 6 and pump terminal 14)
vi) Remove the allen screws fixing the air intake pipe flange and the gas/air mixture pipe flange to the blower.
v) Unscrew the three bolts fixing anti-vibration mounts to the combustion blower through the base of the cabinet.
vi) Reassemble (Section 7.3)
NB: When reassembling inspect any gaskets for damage and replace if necessary.
vii) Reset the gas rate (See Section 4 - Commissioning)

7.4.9 Gas Control Valve (Fig. 5.7.3 item 91)

i) Isolate the appliance (Section 7.1)
ii) Gain access (Section 7.2)
iii) Remove the cover concealing the electrical connections on the front of the gas valve.
iv) Remove the push on connectors exposed taking note of the correct positions.
v) Remove the push on connectors to the gas low pressure switch taking note of the correct positions.
vi) Remove the earth connection to the side of the gas valve.
vii) Remove the plastic air tube to the base of the gas valve.
viii) Remove the four allen screws securing the gas inlet flanged connections to the gas control valve.
ix) Undo the four bolts fixing the base of the gas control valve to the gas outlet block.
x) Remove the gas valve.
xi) Unscrew the gas low pressure switch at its connection to the gas control valve body.
xii) Reassemble (Section 7.3)
xiii) Reset the gas rate (See Section 4 - Commissioning)

7.4.10 Gas Low Pressure Switch (Fig. 5.7.3 item 101)

i) Isolate the appliance (Section 7.1)
ii) Gain access (Section 7.2)
iii) Remove the push on connectors to the gas low pressure switch taking note of the correct positions.
iv) Unscrew the gas low pressure switch from the brass holder.
v) Reassemble (Section 7.3)

7.5 GAS ORIFICE (Fig 5.7.3 item 87)

i) Isolate the appliance (Section 7.1)
ii) Gain access (Section 7.2)
iii) Unscrew and remove the brass plug from the gas outlet block.
iv) Remove the rubber seal from the injector housing.
v) Insert a flat blade screwdriver into the exposed hole and unscrew the gas injector.
vi) Check the injector is the correct size for the boiler size and fuel type.
vii) Reassemble (Section 7.3)
NB: Ensure that the injector is screwed fully home
viii) Reset the gas pressure (See Section 4 - Commissioning)

7.6 SPARK IGNITION/FLAME DETECTION ELECTRODE (Fig. 5.7.2 item 50)

i) Isolate the appliance (Section 7.1)
ii) Gain access (Section 7.2)
iii) Remove the pull off HT lead to the spark ignition electrode.
iv) Remove the burner head (Section 7.7 steps iv) to vi)).
v) Undo the screws to the spark ignition electrode flange located on the burner head and withdraw the spark ignition electrode.
vi) Reassemble (Section 7.3)
NB: When reassembling inspect the gasket for damage and replace if necessary.
With the new spark ignition electrode in place it is essential to ensure the gap between the tip of the electrode and the burner surface is 4mm.
Distances above or below 4mm will affect ignition performance. If necessary gently bend the electrode taking care not to damage the ceramic insulator.

7.7 BURNER HEAD & BURNER (Fig. 5.7.2 items 47 & 45)

i) Isolate the appliance (Section 7.1)
ii) Gain access (Section 7.2)
iii) Remove the pull off HT lead to the spark ignition/flame detection electrode head.
iv) Remove the four screws retaining the access panel (Fig. 5.7.4 item 14) and remove the access panel from the top of the cabinet.
iv) Remove the two allen screws fixing the flange gas/air mixture pipe connection to the burner head.
v) Remove the five allen screws fixing the burner head to the top of the heat exchanger.
vi) Withdraw the burner & burner head from the top of the heat exchanger through the access panel opening in the top of the cabinet.
vii) Unscrew the burner from the burner head taking care not to damage the burner mesh.
vi) Reassemble (Section 7.3)
NB: When reassembling inspect any gaskets for damage and replace if necessary.
Set the spark gap as detailed in Section 7.6
vi) Reset the gas rate (see Section 4 - Commissioning)

7.8 HEAT EXCHANGER (Fig. 5.7.2 item 42)

i) Isolate the appliance (Section 7.1)
ii) Gain access (Section 7.2)
iii) Shut of the water supply to the appliance.
iv) Remove the burner head (Section 7.7)
v) Drain the system to below the level of the appliance using the drain off tap at the base of the heat exchanger.
vi) Remove the front control panel (Section 7.2 (iii))
vii) Remove the boiler thermostat (Section 7.4.2)
viii) Remove the push on connectors to the water pressure switch, flow overheat thermostat, flow high limit thermostat and flue protection thermostat taking note of the correct positions.
ix) Remove the condensate trap (Section 7.10)
x) Remove the pressure gauge phial located next to the drain off tap.
xi) Remove the air filter (Section 7.9)
xii) Remove the two springs connecting the bottom tray of the air filter with the cabinet top cover.
xiii) Disconnect the flow and return connections to the boiler and remove (cut) their olives from the pipes.
xiv) Remove the push on flue and air connections to the flue and air pipes exiting the top of the boiler.
xv) Remove the four screws fixing the cabinet top cover to the cabinet body and remove the top cover.
xvi) Remove the nut fixing the strap retaining the base of the heat exchanger and pull out the strap by unhooking it from its fixing behind the heat exchanger.
xvii) Remove the allen screw securing the top of the heat exchanger to its mounting bracket.
xviii) Remove the heat exchanger, with pipework attached.
xix) Remove the flow, return and flue pipework from the heat exchanger
xx) Reassemble (Section 7.3)
xxi) Recommission (Section 4 - Commissioning)

7.9 AIR FILTER (Fig. 5.7.4 item 19)

i) Isolate the appliance (Section 7.1)
ii) Gain access (Section 7.2)
iii) Drop the lower section of the air filter housing by releasing the toggle clip.
iv) Open the lower section as far as possible and pull out the combined paper filter element with rubber seal.
v) Reassemble (Section 7.3)

7.10 CONDENSATE TRAP (Fig. 5.7.2 item 58)

i) Isolate the appliance (Section 7.1)
ii) Gain access (Section 7.2)
iii) Disconnect the condensate line from the base of the heat exchanger.
iv) Disconnect the condensate line from the base of the flue assembly.
v) Disconnect the condense lines from the projection of the condensate trap from the base of the cabinet.
vi) Withdraw the condensate trap.
vii) Mop up any spilled condensate.
viii) Reassemble (Section 7.3)

NB: When re-fitting the condensate trap pour water onto the condensate hose from the base of the heat exchanger until nearly full. Then reconnect the condensate hose to the base of the heat exchanger.

7.11 PRESSURE GAUGE (Fig. 5.7.1 item 116)

i) Isolate the appliance (Section 7.1)
ii) Gain access (Section 7.2)
iii) Shut off the pressure measurement point at the return drain valve located at the base of the heat exchanger.
iv) Remove the phial from its mounting at the return pipe entry to the base of the heat exchanger.
v) Press in the catches and push the pressure gauge forward through the control panel.
vi) Reassemble (Section 7.3)
vii) Refill the system (See Section 4 - Commissioning)

7.12 SIGHT GLASS (Fig. 5.7.2 item 48)

i) Isolate the appliance (Section 7.1)
ii) Gain access (Section 7.2)
iii) Unscrew the sight glass fitting from the burner head.
iv) Reassemble (Section 7.3)

7.13 HT IGNITION LEAD (Fig 5.7.1 item 122)

i) Isolate the appliance (Section 7.1)
ii) Gain access (Section 7.2)
iii) Remove the lead from the electrode and the ignition control box.
iv) Reassemble (Section 7.3)

7.14 Air Orifice (Fig. 5.7.3 item 131)

i) Isolate the appliance (Section 7.1)
ii) Gain access (Section 7.2)
iii) Disconnect the flexible air intake hose from the air inlet manifold (Fig 5.7.3 item 85)
iv) Unscrew the air orifice grub screw (Fig 5.7.3 item 84) to release the air orifice.
v) Lift the air orifice from its seat in the air inlet manifold.
vi) Reassemble (Section 7.3)
NB: When replacing the air orifice ensure that the new orifice is seated with the chamfer facing upwards.

8. SHORT SPARE PARTS LIST

Item	GC No	Part Denomination	Item	GC No	Part Denomination
19	114 105	Air Filter	45	E03 886	Burner

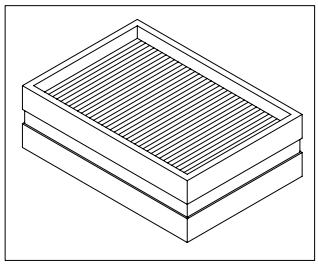

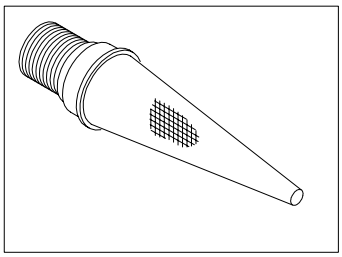

46	114 118	Burner Manifold Gasket	49	375 527	Ignitor Gasket

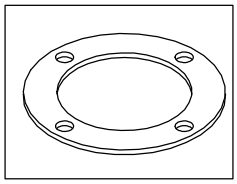

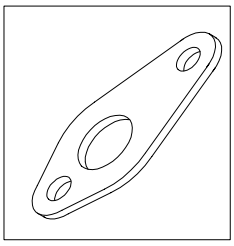

50	114 120	Ignitor/Sensor Probe	55	114 122	Flexible Hose Gasket

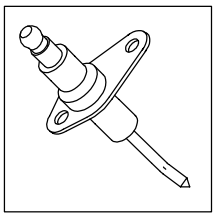

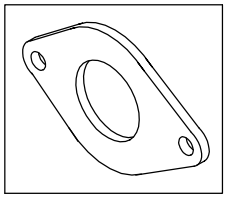

63	375 530	Boiler Thermostat	67	375 532	Flue Thermostat

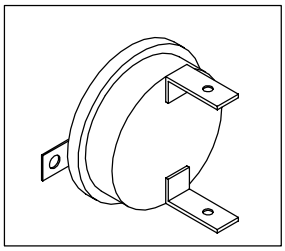

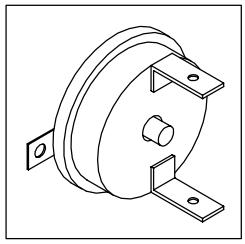

71	375 533	Flow Overheat Thermostat	72	375 534	Flow High Limit Stat

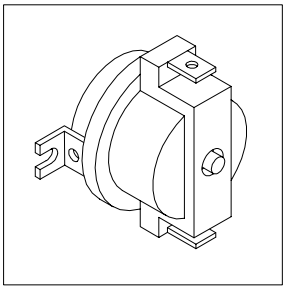

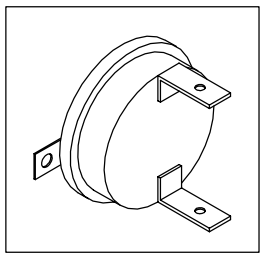

Item	GC No	Part Denomination
90	375 535	Gas Valve Outlet Gasket
91	375 536	Gas Valve

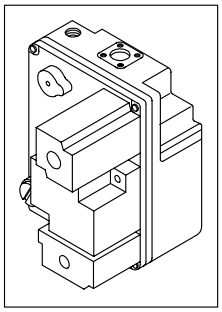

Item	GC No	Part Denomination
104	114 122	Flexible Hose Gasket

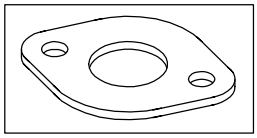

Item	GC No	Part Denomination
106	E01-074	Ignition Control Box

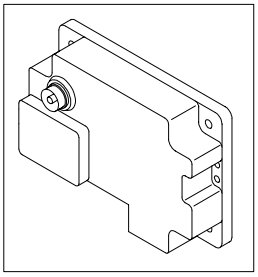

Item	GC No	Part Denomination
109	379 744	Air Pressure Switch

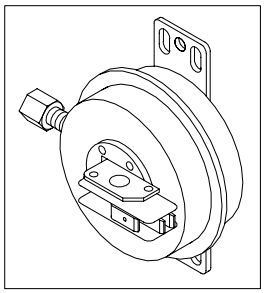

Item	GC No	Part Denomination
118	E01-075	HT Ignition Cable

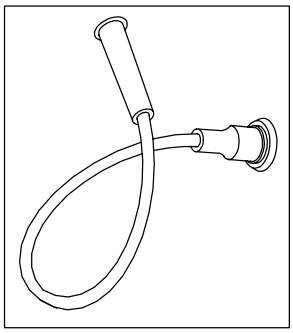

SHORT SPARE PARTS LIST FOR THE KESTON CONDENSING BOILER RANGE

Item	GC No	Part Denomination
19	114 105	Air Filter
45	E03-886	Burner
46	114 118	Burner Manifold Gasket
49	375 527	Ignitor Gasket
50	114 120	Ignitor/Sensor Probe
55/104	114 122	Flexible Hose Gasket
63	375 530	Boiler Thermostat
67	375 532	Flue Thermostat
71	375 533	Flow Overheat Thermostat
72	375 534	Flow High Limit Thermostat
90	114 139	Gas Valve Gasket
91	375 536	Gas Multifunctional Control Valve
106	E01-074	Ignition Control Box
109	379 744	Air Pressure Switch
122	E01-075	HT Ignition Cable

WD 98/0/1998

KESTON CONDENSING BOILERS

IMPORTANT
KESTON 130
INSTALLATION KEY POINTS

- *Read Installation Manual Carefully*
- *Ensure that there is at least 9 feet head of water pressure at the top of the boiler.*
- *DO NOT remove the dust caps from the air and exhaust pipes until ready to connect.*
- *Ensure that ALL dust particles, filings , plastic chips etc. are removed from the inlet pipe.*
- *If the installation is a replacement the system must be flushed clean. System should be drained hot, then refilled, then drained again until the water is clean.*
- *Ensure that there is a proper electrical supply ie 230V fused at 10A for the permanent live.*
- *Take great care with pipe connections to ensure that no damage is done to the internal pipework.*
- *Ensure that the 22mm condensate pipe is not exposed to freezing conditions.*
- *Make sure that the exhaust pipe terminates away from windows or vents and is out of reach.*
- *Make sure that the air inlet and exhaust pipe outlets are at least 500mm apart.*
- *Check tightness of all connections in the boiler before firing.*
- *Ensure that the terminals supplied are fitted to both the exhaust and air inlet pipes.*
- *The system must be free from air before firing.*
- *The pump must always run when the boiler is firing.*
- *Gravity circuits are not allowed.*
- *If TRV's are installed on radiators ensure that a bypass is installed to maintain required flow.*