KESTON

260,000 Btu/h (76.2kW) Model
340,000 Btu/h (100kW) Model

Fan Powered High Efficiency
Commercial Condensing Gas Boiler

Installation And Servicing Instructions

Keston 260
Keston 340

PI No : 87AU111 GB/IE

These instructions must be left either with the user or next to the site gas meter.

KESTON
Boilers

34 West Common Road
Hayes, Bromley, Kent BR2 7BX
Tel. +44 (0)208 462 0262 Fax. +44 (0)208 462 4459
e-mail: info@keston.co.uk http: //www.keston.co.uk

CE
0087

CONTENTS

Section	Description
1	GENERAL INSTRUCTION
1.1	Description
1.2	Boiler Schematic
1.3	Related Documents
1.4	Performance Data
2	BOILER LOCATION
2.1	Dimensions & Minimum Clearances
2.2	Service Connections
2.3	Position
2.4	Electrical
2.5	Gas Supply
2.6	Water Systems
2.7	Flue System
2.8	Air Supply
2.9	Compartment Installation
2.10	Condensate Drainage
2.11	Under Floor Heating/Weather Compensation
3	INSTALLATION OF THE BOILER
3.1	Wall Mounting Bracket
3.2	Mounting The Boiler
3.3	Floor Standing Frame - Optional
3.4	Assembly Practice
3.5	Installing Flue And Air Pipes
3.6	Condensate Drainage
3.7	Water System
3.8	Gas Supply
3.9	Electrical Supply
3.10	Exchanging A Boiler
4	COMMISSIONING OF THE BOILER
4.1	Initial Flushing
4.2	Gas Supply
4.3	Electrical Installation
4.4	Initial Firing
4.5	Hot Flushing
4.6	Checking The Gas Pressure

4.7 Combustion Fine Tuning
4.8 Handing Over To The User

5 FAULT FINDING
5.1 Electrical Control Sequence
5.2 Fault Finding Flow Chart
5.3 Continuity Checking
5.4 Module Functional Flow Wiring Diagram
5.5 Full Electrical Wiring Diagram
5.6 Full Illustrated Wiring Diagram
5.7 Exploded Assembly Diagrams

6 SERVICING
6.1 Pre Service Checks
6.2 Recommended Routine Service

7 REPLACEMENT OF PARTS
7.0 General
7.1 Precautions
7.2 Access
7.3 Replacement Procedure
7.4 Electrical Components
7.5 Gas Orifice
7.6 Spark Ignition/Flame Detection Electrode
7.7 Burner Head & Burner
7.8 Heat Exchanger
7.9 Condensate Trap
7.10 Pressure Gauge
7.11 Sight Glass
7.12 HT Ignition Lead
7.13 Air Orifice

8 SPARE PARTS LISTINGS

1. GENERAL INSTRUCTION

1.1 DESCRIPTION

The Keston 260 and 340 Condensing Boilers are unique in their concept and design. They comprise two boiler modules with individual gas valve, fans, burners and heat exchanger assemblies. The two modules are fully independent in operation and are automatically sequenced to provide optimum load matching. In addition, firing sequence is regularly rotated to ensure even usage levels. While the application for which the boilers were designed is the same as those which other boilers are used, the Keston boiler has the added advantage of very high efficiency, and small diameter plastic flue which can be extended to 20 metres horizontally or vertically. The Keston 260 and Keston 340 are designed to be wall hung. However, floor standing installation can be accommodated by using the optional floor standing frame.

The Keston module uses a high power combustion blower to deliver a pre-mix of gas and air to a downward firing burner in a high efficiency, single pass heat exchanger. The flue system is room sealed and fan powered. The ignition is direct spark and fully automatic. The boiler housing is **not** waterproof and should be installed in a position where it will always be dry. Consideration should also be given to the noise levels generated by the combustion fan when in operation. Small air intake points are incorporated within the appliance cabinet to ensure that the interior of the cabinet is maintained under a slight negative pressure. This is a safety feature to reduce the possibility of products leakage out of the cabinet into the installation space..

The boiler is suitable for connection to open vented or, preferably, sealed systems. The system must be pumped central heating or pumped central heating with combined indirect sanitary hot water. Gravity circuits must not be used.

Forming part of each boiler module is the heat exchanger which is made from a highly corrosion resistant stainless steel, formed into tightly wound coil. The hot combustion gases from the central down firing burner pass through this coil imparting heat into the system water. Integral module shunt pumps within the appliance cabinet ensure each module receives correct water flow when firing. The Keston boiler is not a high water content boiler and does not contain the metal mass, or water volume, of a cast iron or steel boiler. This boiler is of low mass and low water content and therefore responds faster when there is a call for heat.

1.2 BOILER SCHEMATIC

Air is drawn into the boiler through a 100mm composite plastic pipe. Each module air flow is proved by a differential pressure across the air control orifice. Gas is mixed with combustion air at the inlet to the fan. The gas flow is regulated by an orifice located in the housing downstream of the gas valve. The gas and air are thoroughly mixed in the blower and fed into the burner located at the top end of the heat exchanger module. The gas and air mixture is ignited by a direct spark ignition control system and burns with a blue flame just off the surface of the burner. As the hot products of combustion pass downwards, they are cooled by exchanging heat with the circulating water which enters the heat exchanger coil at the bottom of the heat exchanger.

When the return water temperature is below 55°C, part of the water vapour in the combustion products will condense inside the heat exchanger, thus increasing the boiler efficiency further by releasing the latent heat of condensation. This condensate falls to the bottom of the heat exchanger where it is separated from the flue gases and exits from the boiler through the condensate drain. Any condensate formed in the flue runs back down the flueway and is drained at the base of the flue connection to the heat exchanger or drain points within the flue.

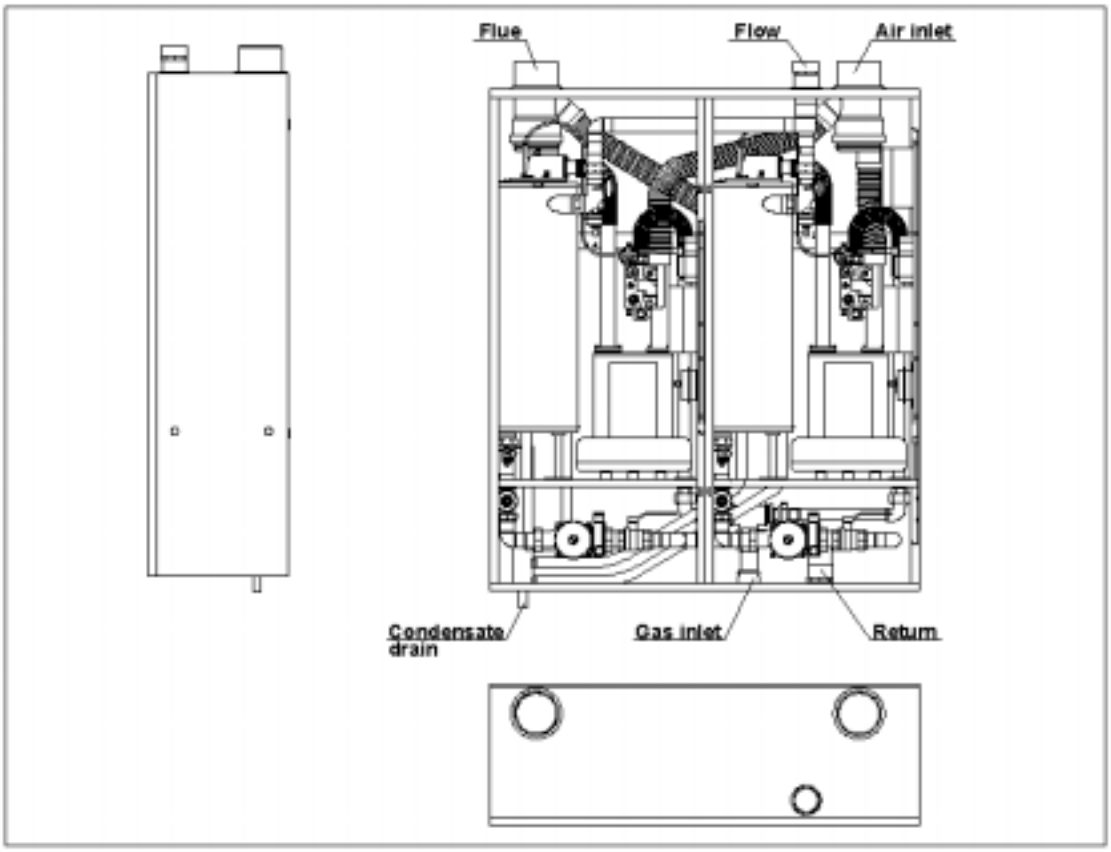

Fig. 1.2 - Boiler Layout

The condensate is very slightly acidic with a pH level of around 5 (about the same acidity as vinegar) and should be piped in a plastic pipe. It is not harmful to the waste disposal system and may be disposed of as normal waste water.

The flue gases are piped in a 100mm composite plastic pipe to the outside. The temperature of the flue gases are usually around 5°C above the temperature of the return water. The flue pipe should be terminated outside the building from where they cannot re-enter the building or any other adjacent building.

The heating level may be controlled by room thermostats, hot water calorifier thermostats, programmer time clocks and energy management systems.

1.3 RELATED DOCUMENTS

The Keston Condensing Boiler must be installed in accordance with the current issue of the *Gas Safety (Installation and Use) Regulations (as amended after 1996)*, current *IEE Wiring Regulations*, *Building Regulations*, *Building Standards (Scotland) Consolidation*, and the *Bye Laws of the local Water Undertaking*.

In addition, due account must be taken to the following Codes Of Practice:

BS 6891	:	*Gas Supplies*
BS 6644	:	*Installation of gas fired hot water boilers of rated input between 60kW and 2MW*
BS 6880	:	*Central Heating by LPHW*
BS 7593	:	*Treatment of Water in Hot Water Central Heating Systems*.

CP342.2	:	*Centralised HW Supply*
IM/2	:	*Purging procedure for non-domestic gas installations*
IM/16	:	*Guidance for installation of gas pipework boosters and compressors for customers premises*
IM/22	:	*Installation guide for high efficiency (condensing) boilers (Industrial and commercial appliances)*
BS 7593	:	*Treatment of Water in Hot Water Central Heating Systems*

For Timber Framed Buildings please refer to The Institute of Gas Engineers document IGE/UP/7:1998.

1.4 PERFORMANCE DATA

		KESTON 260	**KESTON 340**
Max. Input (Gross CV)	kW/(Btu/h)	84.6/(288,650)	110/(375,300)
Max. Output To Water (80/60C Flow/Return)	kW/(Btu/h)	76.1/(259,650)	99.0/(337,800)
Max. Output To Water (60/40C Flow/Return)	kW/(Btu/h)	79.5/(271,250)	104.0/(354,800)
Max. Output To Water (50/30C Flow/Return)	kW/(Btu/h)	82.9/(282,850)	107.8/(367,800)
Burner Setting Pressure - Hot *(Factory Preset)*	mbar/(in w.g)	9.8/(3.9)	13.0/(5.2)
Gas Consumption After 10 mins (CV of Gas - 38.7 MJ/m^3) / (1038 Btu/Ft^3)	l/s / (Ft^3/hr)	2.19/(278)	2.84/(362)
Max. Operating Flow Temp.	^{o}C	82.00	82.00
Max. Head (Open Systems)	m / (ft)	30.50 / (100)	30.50 / (100)
Max. Press. (Sealed System)	Bar	2.70	2.70
Min. Head (Open Systems)	m	3.0	3.0
Inlet Gas Pressure	mbar/(in w.g)	20.0 / (8.0)	20.0 / (8.0)
Gas Orifice Size	mm	3.75	4.75
Recommended Temperature Differential	^{o}C	10 to 15	10 to 15
Required Water Flow Rate	l/s	1.6	2.0
Electrical Supply		230V 50Hz	230V 50Hz
Power Consumption (Max)	W	1200	1200
Cabinet Height	mm	1262	1262
Cabinet Width	mm	1082	1082
Cabinet Depth	mm	354	354
Weight - Full	kg / (lbs)	165/(363)	165/(363)
Weight - Empty	kg / (lbs)	150/(330)	150/(330)
Flow and Return Connection		Rp 2" F	Rp 2" F
Gas Connection		Rp 1.25" F	Rp 1.25" F
Flue Pipe Size (nominal bore)	mm / (in)	100 / (4)	100 / (4)
Air Intake Pipe Size (nominal bore)	mm / (in)	100 / (4)	100 / (4)
Max. Air Intake Length	m	20.0	20.0
Max. Flue Outlet Length	m	39.0	39.0
Max. Total Flue Outlet and Air Intake Length	m	40.0	40.0
Type of Gas		G20 Natural Gas Only	
Flue & Air Intake Pipe Material		Keston Composite Pipe Only	
Optimum Flue Gas CO2 Level	%	8.4	8.4
Destination Countries		GB/IE	GB/IE

2. BOILER LOCATION

All dimensions in mm.

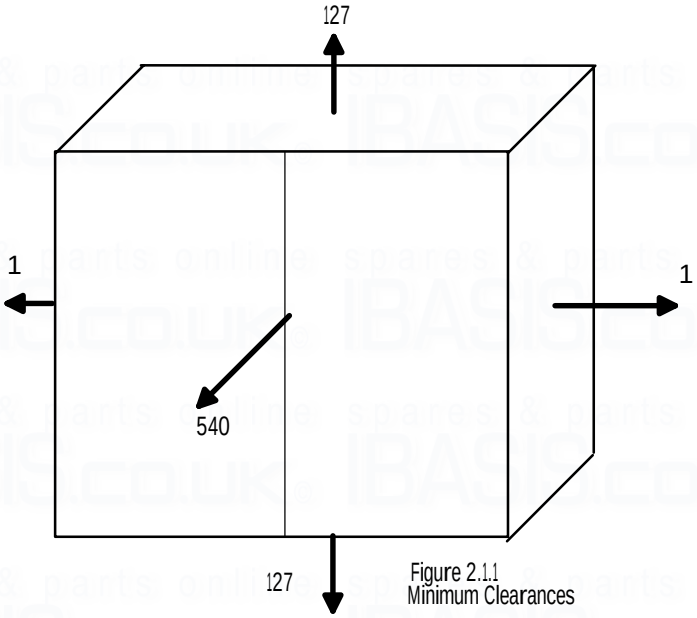

Figure 2.1.1
Minimum Clearances

2.1 DIMENSIONS AND MINIMUM CLEARANCES

The boiler must be installed in minimum clearances shown to allow subsequent servicing, and safe operation.

2.2 SERVICE CONNECTIONS

Gas, water, air and flue pipe, condensation, and electrical connections are as shown. Gas : 1.25 inch BSP female. Flow/Return 2 inch BSP female.

2.3 POSITION

The Keston is not suitable for external installation. The boiler may be installed in any room or internal space, although particular attention is drawn to the requirements of the current IEE Wiring Regulations and, in Scotland, the electrical provisions of the Building Regulations applicable in Scotland, with respect to the installation of the boiler in a room or internal space containing a bath or shower.

Compartment installation is permitted - such compartments must be constructed in accordance with BS 6798.

The wall on which the boiler is mounted must be of suitable load bearing capacity and must be non-combustible.

Important : It is not recommended to install the boiler on a studded wall or similar - it is possible that the vibration from the fan would be amplified and transmitted to other parts of the property.

The Keston can be located virtually anywhere desired provided that all regulations are complied with. Because of the boiler's compact size and venting flexibility, the installation is not limited to a boiler room setting.

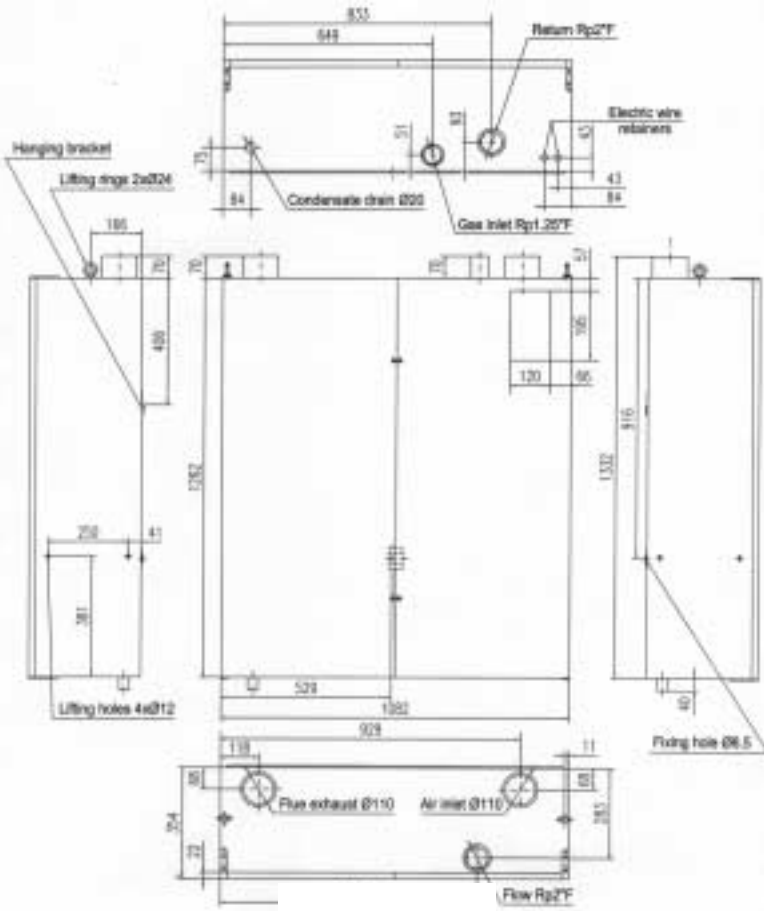

Figure 2.1.2

Before locating the boiler near a living space consider whether the sounds generated by the boiler will be objectionable. The boiler may be located within a cupboard enclosure to reduce noise levels if located within a living space.

2.4 ELECTRICAL

2.4.1 Electrical Connections

The boiler must be connected to 230V ~ 50Hz supply/controls as follows:

Mains Connection (rated at 10A)

Terminal 1	**-**	**LIVE**
Terminal 2	**-**	**NEUTRAL**
Terminal 3	**-**	**EARTH**

On/Off User Control Link (volt free external control)

Terminal 17
Terminal 18

Remote Lockout Signal (230V)

Terminal 19	-	Module 1
Terminal 20	-	Module 2

NB: External monitoring controls must be configured to ignore signal unless present for more than 5 seconds.

Main System Pump (optional) [pump on when boiler enabled]

Terminal 4	-	Live
Terminal 6	-	Neutral
Terminal 7	-	Earth

Wiring external to the boiler must be in accordance with current I.E.E wiring regulations and local regulations.

The method of connection to the mains electricity supply **must** facilitate complete electrical isolation of the boiler complying with the requirements of BS 1363. There must be only one common method of isolation for the boiler and its control system. The appliance must be connected to the 10A supply via a fused double-pole switch having at least 3mm (1/8 inch) contact separation in both poles, serving only the boiler and the system controls.

2.5 GAS SUPPLY

A gas meter should be connected to the service pipe by the local gas supplier or their contractor. An existing meter should be checked preferably by the gas region to ensure that the meter is adequate to deal with the rate of gas supply required. Installation pipes should be fitted in accordance with BS 6891. Gas consumption is given in Section 1.4. The boilers are for use with NATURAL GAS (G20) ONLY.

Minimum/Maximum Natural Gas Pressure:
Natural gas pressure before the gas valve must be maintained at between 17.5 mbar (7 in WG) and 22.5 mbar (9 in WG) while both modules are running.
Gas pressures above or below this level will lead to problems associated with the gas valve's internal pressure regulator.

Supply pipes to the boiler must not be sized less than the boiler inlet connection (1.25 in). Due consideration must be given to the supply pressure to other gas appliances in the premises. Reduction in dynamic gas supply pressure will result in ignition failures. Ensure gas supply pipe work is adequately sized for the length of run from the meter to the boiler.

2.6 WATER SYSTEMS

All piping must be installed in accordance with all applicable local and Water Supply Bylaws for forced hot water heating systems.
Consideration must be given to pipe capabilities and pressure drop through the piping.
Water treatment must be carried out to BS 7593 : Treatment of Water in Hot Water Central Heating Systems.
Pump isolating valves must be positioned as close to the pump as possible.

a The Keston 260 and 340 are suitable for use on open, vented water systems with combined feed and vent of 32mm nominal diameter.

b It is preferable for use on sealed water systems, provided the appropriate components required (see Section 2.7.2 Sealed Systems) are included in the system.

c Any system must be thoroughly flushed clean of grease, dirt and debris, prior to connection with the boiler. A strainer should be installed in the system return line to collect any solder, or other debris, from the installation.

d All water systems must be constructed to comply with requirements of the Local Water Authority.

e Jointing should be either with capillary, threaded or compression fittings. Pipes should have a gradient to ensure air is passed easily to vent points and water flows readily to drain points.

f Draining taps must be located in accessible positions which permit the draining of the boiler and hot water storage vessel. Draining taps should be at least 22 mm in nominal size and be in accordance with BS 2879.

AIR VENT POINTS

g These must be fitted at all high points where air will naturally collect and must be sited to allow complete draining of the system.

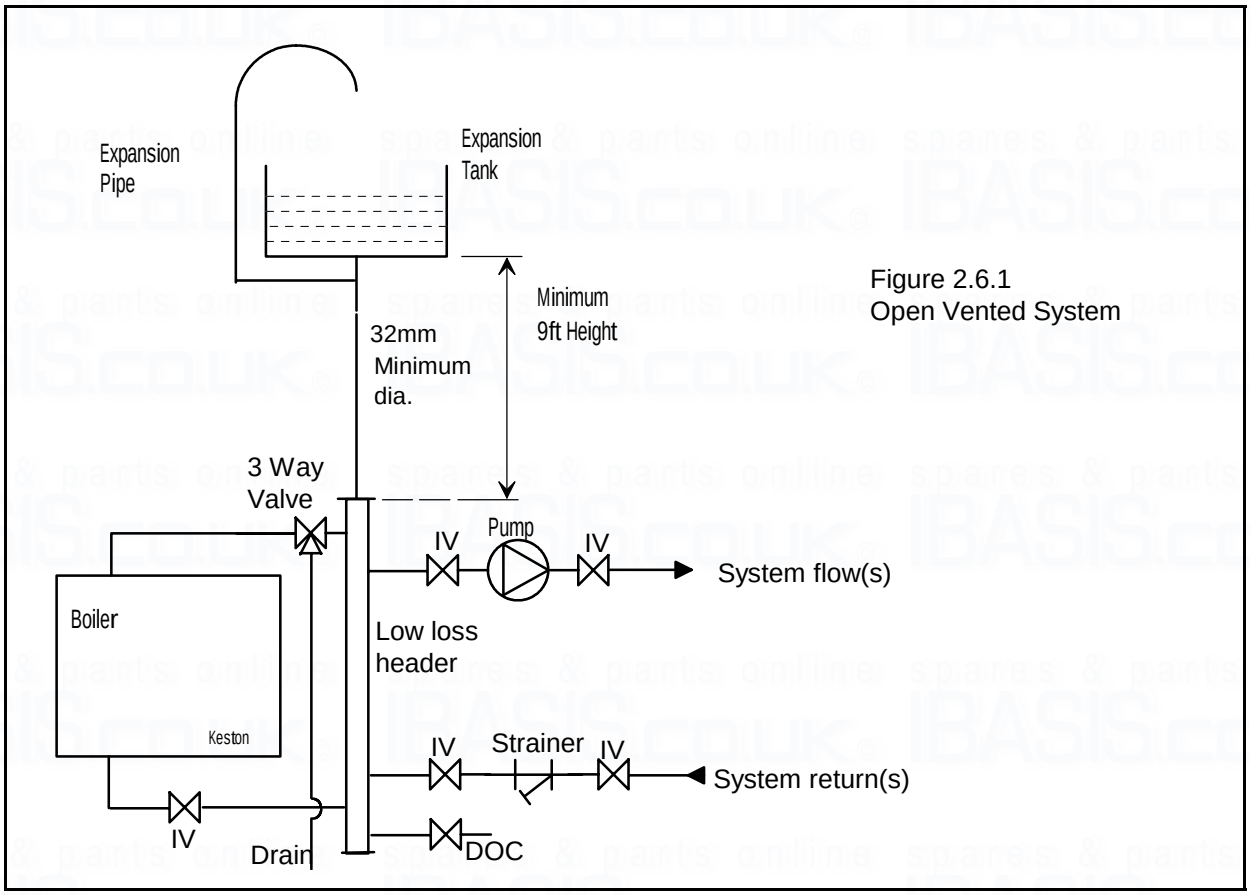

Figure 2.6.1
Open Vented System

2.6.1 Open Vented Systems

A typical system is shown in Figure 2.6.1 which includes a combined feed and vent. Note the valve between the boiler flow and the open vent is a three way blowdown type valve. Note that the minimum static head required is 3m at the top of the system pipework. If the cold feed/vent is not brought to the low loss header as shown, then the pressure loss across the heat exchanger may have to be taken into account when estimating the static pressure. Cold feed/vent size must comply with BS6644.

Although suitable for open vented systems with combined feed and vent arrangements, the Keston is a low water content boiler. As such, any air entrainment within the system water will produce boiler "kettling". It is therefore recommended, if in any doubt, to consider the use of sealed systems where possible.

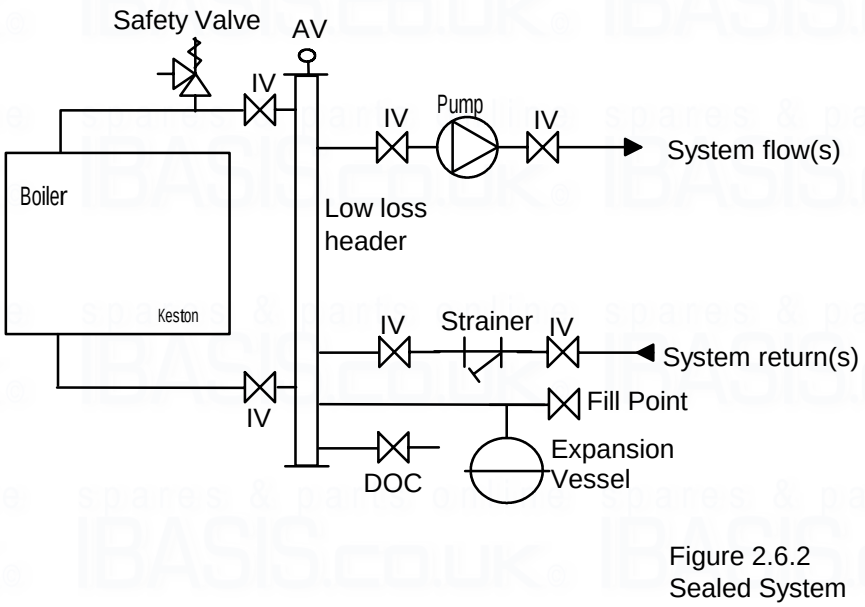

Figure 2.6.2
Sealed System

2.6.2 Sealed Systems

Sealed systems must be designed in accordance with BS 6644 and BS 7074 Pt1. A typical sealed system is shown in Figure 2.6.2. It must include :

(i) A safety valve fitted on the flow, adjacent to the boiler. It must be non adjustable and preset to 3 bar. A drain pipe must be attached, at least as big as the valve connection, and routed to drain in any area not hazardous nor where it may be subject to freezing.

(ii) An expansion vessel complying with BS 4814 and sized on the basis of the total system volume and initial charge pressure. The vessel must be positioned as shown in figure 2.6.2.

(iii) A filling point, in accordance with local water authority requirements.

(iv) A method of system make-up (automatic or manual), in accordance with local water authority requirements.

(v) The installation must be designed to work with flow temperatures of up to 110 °C.

All components of the system including the heat exchanger of any calorifiers used must be suitable for a working pressure of 3 bar and a temperature of 110 °C. Care should be taken in making all connections that the risk of leakage is minimised.

2.6.3 Hot Water System (if applicable)

The hot water storage vessel must be of the indirect type). DIRECT CYLINDERS MUST NOT BE USED. Further guidance is provided in BS 1394.

2.6.4 Balance Headers - Multiple Boiler Installations

Boiler water flows are critical to the operation of the boiler. If flow cannot be maintained through the system pipework to meet the minimums required by the boiler the boiler will “kettle” or even produce steam which can damage the heat exchanger and invalidate the heat exchanger warranty. The implementation of a balance header, as shown in the above schematics, is recommended to ensure adequate water circulation is maintained through the boiler by the integral boiler shunt pumps, irrespective of system conditions.

The size of the balance header is dependant on the number of boilers serving the header. A guide to sizing is given below:

Total Boiler Output	Header Diameter
up to 100kW	3”
up to 200kW	4”
up to 300kW	4.5”
up to 400kW	5”

When assembling a balance header the following design considerations must be observed:

a) Each boiler must have its own flow and return connection to the balance header pipe. Common flow and return connections with other boilers will cause reverse circulation effects to occur.
b) The minimum distance between the system flow and return connections is 600mm
c) A drain off point should be fitted to the base of the header, along with cleaning access, for sludge removal.
d) The top of the header should be vented.

2.6.5 Air Elimination

In the initial charge of water to the boiler system and in all subsequent additions of water to the system some air will be dissolved in the water. As the water is heated the air is driven out of the solution and will collect in high spots in the system. **These air bubbles can interfere with pumping and heat transfer and must be eliminated.**

Installation of air bleed valves at the high spot(s) in the system will allow for air elimination when filling the system and will allow re-venting in a day or so after all air has been driven out of solution.

2.6.6 Strainers

Debris in the heating system can cause noise if it enters the heat exchanger. Fitting of a Y-strainer on the system return(s) will trap any debris left in the system. The boiler guarantee does not cover heat exchanger failure due to debris abrasion within the system.

2.6.7 Pump Selection

The Keston 260 and Keston 340 boilers are supplied complete with integral boiler shunt pumps. However, these pumps are sized purely to provide adequate flow rate through the boiler at the pressure drop caused by the boiler itself. No allowance has be provided in the shunt pump size for system resistance.

A system pump(s) should therefore be selected sized to provide the required system flow rate at the pressure drop created by the system index circuit.

2.7 FLUE SYSTEM

2.7.1 Design

Individual air supply and flue outlet pipes are used. The material used for flue outlet &/or air inlet must be **Keston Composite** pipe of an internal diameter not less than 100mm. Suitable pipe and fittings can be obtained by Keston Boilers Ltd via its appointed distributors.

Both flue outlet terminal and air inlet terminal are supplied and are illustrated in Figure 2.7.1.

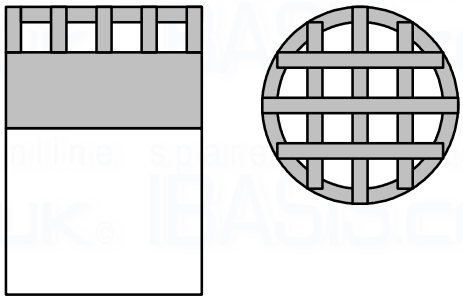

Figure 2.7.1
Terminal Design

Although the flue outlet and air inlet terminals are identical great care must be taken to ensure that the air intake terminal is positioned facing downwards or in such a way as to ensure rain cannot enter the air intake pipework. Boiler damage due to water entry through the air intake pipework is not covered under the appliance warranty.

2.7.2 Minimum & Maximum Lengths

The flue outlet and air inlet pipes must have lengths of at least 1m each.

The maximum lengths of both air inlet pipe and flue outlet pipe, when no bends are used, are as detailed below.

Minimum Flue Length	:	0.5m
Minimum Air Intake Length	:	0.5m
Maximum Air Inlet Length	:	20.0 m
Maximum Flue Outlet Length	:	39.0 m
Maximum Combined Air Inlet and Flue Outlet Length	:	40.0 m

However, each bend used has an equivalent length that must be deducted from the maximum straight length stated above. Knuckle bends must not be used.

A 92.5° sweep elbow is equivalent to 1.0m straight length.

Example:

Air inlet uses two one 92.5° sweep elbows. Hence, maximum length permissible (ie a+b in figure 2.8.2) = 20.0m - 1.0m - 1.0m = 18.0m

Flue outlet uses one 92.5° sweep elbow. Hence, maximum length permissible (ie c+d in figure 7 = 40.0m - 1.0 m - total air inlet length = 39.0m - total air inlet length.

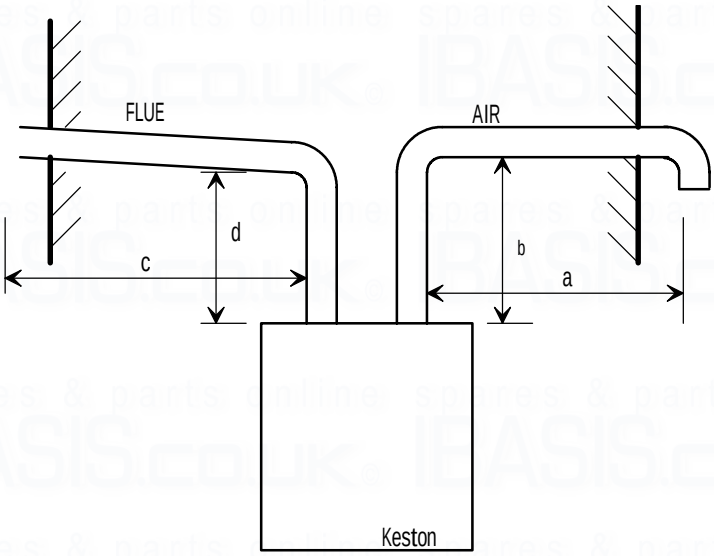

Figure 2.7.2 : Flue & Air Maximum Length Example

2.7.3 Slope

'Horizontal' flue outlet pipework MUST slope at least 2.5 degrees (45 mm per metre run) downwards towards the boiler. Pipework can be vertical. Only swept elbows can be used.
Air inlet pipework can be truly horizontal or vertical, or sloping in a downward direction towards the boiler but in this case rain, etc, must be prevented from entering the pipe. **There must be no troughs in any of the pipework, whether it be air inlet or flue outlet.**

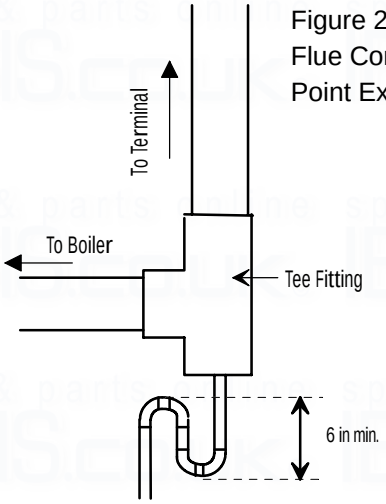

Figure 2.7.3: Flue Condensate Drain Point Example

Due the low temperature of the flue gases further condensate will form within the flue system. Drain points, with suitable traps, must therefore be incorporated within the flue system at the base of vertical flue sections in excess of 4m. These additional condensate drains must be run to discharge as detailed in section 2.10. Such drain points can be formed using standard **Keston Composite** flue fittings. Refer to the example in Figure 2.7.3.

2.7.4 Terminations

Air inlet terminals must be facing downwards and positioned to ensure only fresh air is drawn into the boiler. The air terminal must be located outside of the building.

Drawing of combustion air directly from a ventilated boiler room will invalidate the heat exchanger warranty.

The air inlet terminal must face downwards to prevent entry of rain into the air intake pipework.

The flue outlet terminal is designed to face outwards but can, if desired, be adapted to face in any direction BUT must not be directed in the region of the air inlet. Where the air and flue terminals are located in close proximity the flue terminal should be located above the level of the air inlet terminal.
The two terminals are subject to the requirements of BS 5440 Pt 1 for clearances from features of the building although some can be decreased to the values indicated.
If either the air inlet or the flue outlet terminate at a height of less than 2m (6ft) above ground level the termination must be protected by a suitable guard.
Suitable terminal guards can be obtained from Tower Flue Components Ltd or its distributors.
The Keston Condensing Boiler, as with any condensing boiler, will generate a condensate "plume" from the flue terminal in all weather conditions. Consideration must therefore be given to the effect of this "plume" when selecting a location for the flue terminal.
It is advisable for horizontal flue terminals to place a 45º elbow at the end of the flue to direct the condensate plume up and away from the property.

	Dimensions (mm)	Flue Terminal	Air Inlet
A	Below or beside openable window, air brick, etc.	500	50
B	Below gutters, soil pipes, drain pipes.	75	75
C	Below eaves.	300	50
D	Below balconies or car port roof.	200	50
E	From vertical drain or soil pipes.	75	50
F	From internal or external corner.	600	50
G	Above ground or balcony or roof.	300	100
H	From surface facing a terminal	600	100
I	From terminal facing a terminal.	1,200	1,200
J	From opening in a car port.	1,200	100
K	Vertically from terminal on same wall.	1,500	1,500
L	Horizontally from terminal on same wall.	300	300

Table 2.7.4 Minimum Flue Terminations & Air Inlet Dimensions

2.7.5 Clearances From Wall

Flue outlet and air inlet terminations must be at least 60 mm and 95 mm respectively from the wall face.

2.7.6 Distance Between Flue Outlet & Air Inlet

There is no maximum - the terminations can be on opposite sides of the dwelling if desired.
A minimum clearance of at least 500 mm must be left between the terminations.

2.7.7 General Installations

All parts of the system must be constructed in accordance with BS 5440 Part 1, except where specifically mentioned in these instructions.
All pipe work must be adequately supported.
All joints other than push-on or plastic compression connectors must be made and sealed with solvent cement suitable for Keston Composite pipes.

External wall faces and any internal faces of cavity walls must be made good.

2.8 AIR SUPPLY

The Keston is a room sealed appliance and therefore does not require purpose provided ventilation to the boiler room for combustion air.

2.9 COMPARTMENT INSTALLATION

The casing temperatures of the Keston 260 and Keston 340 are very low. Due to this fact, no compartment ventilation is required for cooling purposes.

2.10 CONDENSATE DRAINAGE

Being a condensing boiler, the Keston is fitted with a condensate trap at the base of the heat exchanger and flue assembly, with facility to connect to a drain point underneath the appliance.

Use only plastic piping and do not reduce below 28mm internal diameter within the dwelling. Condensate should preferably be drained into the sanitary waste system or, alternatively, the rainwater system of the property.

Termination of the pipe must be either at a branch or stack internal to the building, or externally at an open gully. Alternatively, discharge into a purpose made condensate soakaway can be considered. Existing or purpose built drains must use suitable corrosion resistant material as condensate is mildly acidic.

A minimum slope downwards towards the drain of 1 in 20 is essential. Freezing of the termination and pipework must be prevented. Any drainage pipes outside the property must be at least 32 mm *inside* diameter.

2.11 UNDER FLOOR HEATING/WEATHER COMPENSATION

Both underfloor heating and weather compensating control demand reduced system operating temperatures for some of all of the time the system is operating. Traditionally this is achieved by used of mixing valves to reduce flow temperature by blending return water.

The Keston Condensing Boiler provides increased operating efficiencies at low return system temperature. Therefore, in the event the Keston boiler is serving only underfloor heating or only weather compensated circuits at any time the boiler flow temperature should be achieved by limiting the boiler temperature and dispensing with the use of a mixing valve.

The low operating temperatures of this type of system lead to very good operating efficiencies. In fact, under floor heating can produce in excess of 95% operating efficiency from a Keston condensing boiler.

3. INSTALLATION OF THE BOILER

Read Chapter 2 - Boiler Location and decide upon the position of the boiler.
Installation of the boiler is straightforward but consideration must be given to access to allow flue and air pipes to be pushed through walls and ceilings. The order in which the components are installed will depend upon particular site conditions, but in general it will be easiest and most accurate to install the boiler and then build up the flue outlet and air inlet pipes to the terminal - this is the sequence described.

3.1 WALL MOUNTING BRACKET

a Place the bracket on the wall horizontally with the pre-drilled holes at the bottom.
b Drill through the centre hole of the bracket, plug the hole and fix in position.
c Using a spirit level make sure the bracket is completely level and mark the position of the other screw holes.
d Remove the bracket and drill the holes in the positions marked. Plug these holes.
e Screw the bracket to the wall using screws of an appropriate size for the wall type (No. 12 x 2 inch wood screws normally suffice).

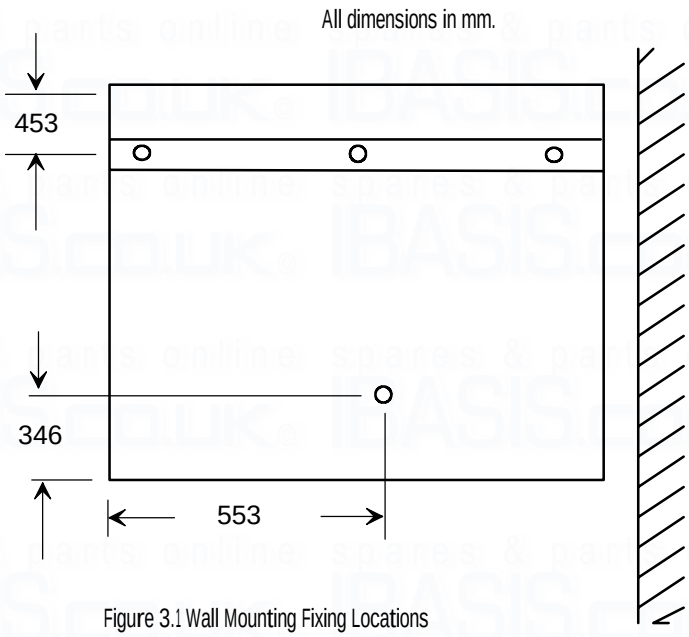

Figure 3.1 Wall Mounting Fixing Locations

3.2 MOUNTING THE BOILER

a Using the detachable side lift handles supplied or via winch, lift and locate the upper rear lip on the boiler to the boiler wall bracket.
b Move the boiler sideways to centralise the boiler on the bracket.

3.3 FLOOR STANDING FRAME - OPTIONAL

If the optional floor standing frame is selected the frame should first be assemble and secured firmly to the plant room floor. Suitable assembly instructions are included with the floor standing frame pack.

Lift the boiler and lower into position onto the frame.

3.4 ASSEMBLY PRACTICE

Remove all plastic debris and burrs when installing air intake piping. Plastic filings caused by cutting Keston Composite plastic pipe must not be allowed to be drawn into the combustion air blower. Prevent dust entering the air intake when cutting on building sites. Blower failure which is determined to be caused by plastic filings or other debris will not be covered by guarantee.

3.5 INSTALLING FLUE AND AIR PIPES

Remember the flue pipe must slope downwards back towards the boiler and this is best achieved using 92.5° bends.

a From the two connections on the boiler, mark the positions of the two holes for the flue and air pipes on the wall(s) or ceiling. To allow access to drill the holes it may be necessary to temporarily remove the boiler. If the boiler stays put then it is imperative that the front doors are closed and the two plastic pipes capped off whilst drilling. Under no circumstances must debris from the wall or cut pipes be allowed to enter the appliance or the plastic pipework.

b Drill the two holes in the wall/ceiling, preferably using a core drill.

c Always thoroughly deburr all pipes and, most important, remove shavings from within the pipe.

d. Assemble the pipework from the boiler connections to the exit from the first wall/ceiling (remount the boiler if removed). When pushing pipe through walls, ensure grit and dust is not allowed to enter the pipe.
ENSURE PIPES ARE FULLY ENGAGED INTO SOCKETS.
Connect the condensate drainage system and fill the condensate trap by pouring water down the boiler flue spigot (See Section 3.6 Condensate Drainage).
Make the final connection of flue and air pipe to the boiler using push on plastic couplings. Ensure that the connectors are set vertically otherwise leakage of condensate may occur which will corrode the casing. Do not use adhesive on the 'push on' end of connecting couplings.

e. Using the same methods drill any further holes (always covering existing pipework), cut and assemble the pipework.

f. From outside, complete the two terminations - See Section 2.7 Flue System and make good all holes.

g. Support any pipes whose route could be displaced either of its own accord or by accident. Any horizontal run over 1m or vertical runs of any length must always be supported. Brackets should be placed at intervals of approximately 1m.

h. Check all connections for security.

3.6 CONDENSATE DRAINAGE

Connect the condensate drainage system to the boiler. It is advisable to use a detachable fitting at connection to the boiler to enable easy removal for servicing.

Fill the condensate trap by pouring water into the boiler flue spigot until water is seen to flow freely from the condensate drainage system. Make the final connection of flue pipe to the boiler.

Details are provided in Chapter 2 - Section 2.10 Condensate Drainage
Connection : 22 mm plastic pipe.

3.7 WATER SYSTEM

Connect the flow and return pipework to the boiler. Details of system requirements are given in Chapter 2 - Section 2.6 Water Systems.
Connections : 2" BSP F.

3.8 GAS SUPPLY

Connect the gas supply to the appliance. Details of gas supply requirements are given in Chapter 2 - Section 2.5 Gas Supply. Supply of adequate gas pressure **(with the boiler running)** is critical to ensure reliable operation of the boiler.
Connections : 1.25 inch BSP F.

3.9 ELECTRICAL SUPPLY

The entry point(s) for the electrical supply cable(s) is in the base of the appliance (see Section 2.2 Service Connections fig. 2.1.2) via two cord grip bushes. Feed the cable(s) through its bush and route inside the cabinet to the connection strip located to the front bottom right of the cabinet.

1. The electrical supply must be as specified in Chapter 2 - Section 2.4 Electrical Supply.
   WARNING : THIS APPLIANCE MUST BE EARTHED.
2. All external controls and wiring must be suitable for mains voltage. Supply wiring should be in PVC insulated cable not less than 1.0mm^2 to BS 6500 Table 16 (material code H05VV-F). Pump wiring from the boiler pump connection should be in 3 core PVC insulated cable not less than 0.5mm^2 to BS6500 Table 16 (material code H05VV-F).
3. The permanent live supply connection may be via a 10 amp fused double pole switch, serving only the boiler. (Refer to Chapter 2 - Section 2.4 Electrical Supply).
4. Securely tighten the terminal screws and route the cable through the re-openable cable clips. Ensure all cables are secured and that the cord grip bush is tightened to securely grip the main cable at entry to the cabinet.
   The supply cable(s) must be connected to the main terminals as follows:-

Terminal 2	**N**	**-**	**Blue wire (Neutral) for 10A permanent supply**
Terminal 1	**L**	**-**	**Brown wire (Live) 10A permanent supply**
Terminal 3	**E**	**-**	**Yellow/Green Wire (Earth)**
Terminal 17 & 18		**-**	**On/Off User controls volt free control link**

The pump cable, if used, must be connected to the pump terminals as follows:-

Terminal 6	N	-	Pump neutral wire (blue)
Terminal 4	L	-	Pump live wire (brown)
Terminal 7	E	-	Pump earth (yellow/green)

NB: The system circulating pump should not have a locked rotor current rating exceeding 2A if powered via Terminal 4 of the boiler main terminal block.

Ensure connection is made such that if the cable slips in its anchorage the current carrying conductors become taut before the earthing conductor.

3.10 EXCHANGING A BOILER

Before removing an existing boiler add Fernox Supafloc , or equivalent cleaning agent, in accordance with the manufacturers instructions. Open all radiator valves and fire the boiler. When the system is fully heated, shut off the gas supply and drain down the central heating system.

Important

The Keston condensing boiler contains components which could be damaged or blocked by grease, dirt or solder etc. It is essential that sludge or scale is removed from an existing system.

The guarantee provided with the Keston does not cover damage caused by system debris or sludge.

Connect the new boiler as instructed in this manual and fit in accordance with Sections 3.1 to 3.8

For sealed systems, fill to a pressure of about 2.7 bar. Check the complete system for water soundness. If leaks need to be rectified using flux or solder the system must be flushed cold again before proceeding.

Reduce the pressure to the Initial System Design Pressure for sealed systems, if applicable. Vent the system.

Gas Supply
The complete gas installation up to the boiler service cock must be checked for soundness. BS 6891.

Electrical Installation
Carry out preliminary electrical safety checks, i.e. Earth continuity, Polarity, Resistance to Earth, Short Circuit using a suitable test meter.

Initial Firing

The gas pressure setting is factory adjusted to within the required range and should not normally need re-adjustment. If the reading is incorrect then check such factors as soundness of the air and flue pipe joints, pressure sensible joints and the gas inlet pressure (20 mbar required). If all joints are sound and the gas inlet pressure is satisfactory set the gas pressure. Full details of this procedure are given in Section 4.6 Checking The Gas Pressure. This will ensure that combustion is good enough to allow combustion fine tuning to take place.

Combustion Fine Tuning
It is advisable on all installations that the combustion quality is checked by measuring the carbon dioxide (CO_2), or oxygen (O_2), level. This procedure is detailed in Section 4.7 Combustion Fine Tuning. Badly tuned combustion will lead to reduce the life of the boiler and invalidate the warranty.

4. COMMISSIONING OF THE BOILER

Important:
This condensing boiler contains components which could be damaged or blocked by grease, dirt, solder etc., from the water system. The following commissioning procedures must be followed precisely.

4.1 INITIAL FLUSHING

All waterways within the Keston are either copper, bronze or high alloy stainless steel. As a result standard water treatment chemicals for conventional central heating boilers are suitable. In any event reference must be made to BS 7593 : Treatment Of Water In Hot Water Central Heating Systems.

a. Disconnect the boiler from the system at the flow and return connections and temporarily link the flow and return pipes on the system.
b. Flush the entire system until clean water is discharged, free from dirt, flux, solder etc. The use of a flushing chemical is recommended, e.g. Fernox Supafloc. Sludge and scale must be removed from an existing system. Boiler failure due to system debris or sludge shall invalidate the guarantee.
c. Connect the system to the boiler and fill in accordance with Section 2.6 - Water Systems. At this stage, for sealed systems, fill to a pressure of about 2.7 bar.
d. Check the complete system for water soundness. If leaks need to be rectified using flux and solder, the system must be flushed cold again before proceeding.
e. Reduce the pressure to the Initial System Design Pressure for sealed systems, if applicable. Vent the system

4.2 GAS SUPPLY

The complete gas installation up to the boiler service cock must be checked for soundness. BS 6891.

4.3 ELECTRICAL INSTALLATION

Carry out preliminary electrical safety checks, i.e. Earth continuity, Polarity, Resistance to Earth, Short Circuit using a suitable test meter.

4.4 INITIAL FIRING

Important
Checking the gas pressure to the pre-mix burners requires a special procedure, outlined below, which must be carried out.

a. Purge the gas supply in accordance with BS 6891 & IM/2.
b. Vent the water system.
Important:
The Keston heat exchanger module consists of a single coil which can trap an air pocket. Great care must be taken to ensure that water flow has been established through the heat exchanger and thus ensuring no air pockets remain in the heat exchanger and pipe work. Firing the boiler while an air pocket exists in the heat exchanger could damage it.
c. Turn both the integral gas service cocks to ON.
d. Turn on the electrical supply, setting any external controls to call for heat.
e. Set the main boiler On/Off switch to “ON” and adjust the set point temperature to a value above actual flow temperature. (adjustment is made by holding in the press button located below the control knob and adjusting the control knob until the required set point temperature is displayed. Releasing the press button will cause the control knob to be ineffective and the display to register actual flow temperature).

f Set the left hand module on/off switch to "ON". The amber light will illuminate on the On/Off switch, the red “lockout” light will illuminate for approximately 2 seconds. The module blower and pump will start and, after about 15 seconds, a spark will light gas at the main burner, provided all air has been purged from the gas supply to the boiler. When the burner is lit and the boiler is operating normally the green (run) lamp, the upper lamp adjacent to the flame symbol, will be illuminated indicating successful ignition (If it does not and the green lamp is extinguished after 10 seconds, air is indicated - turn off and repeat the procedure).
If ignition does not occur, the green (run) lamp, the upper lamp adjacent to the flame symbol, will be extinguished and, at approximately 1 minute intervals, the electronic ignition system will make two further attempts to light the burner.
If the ignition is successful and the boiler is operating normally, the green (run) lamp, the upper lamp adjacent to the flame symbol lamp will remain illuminated.
If after three automatic attempts the boiler still fails to ignite, the green (run) lamp, the upper lamp adjacent to the flame symbol, will be extinguished, the blower will post purge for 120 seconds and the red (lockout) lamp will illuminate.
If, after five manual attempts (to allow for purging of any air in the gas line), the boiler still fails to ignite (indicated by the red (lockout) lamp) refer to Section 5.2 - Fault Finding Flow Chart.

g Turn of the on/off switch for the left hand module and repeat step (f) for the right hand module.

h **Check for gas soundness between the gas service cocks and connection to each burner manifold.**

4.5 HOT FLUSHING

a. Allow the system to heat up, checking for water soundness.

b. Follow instructions provided with the cleaning agent, ie Fernox Supafloc. Turn off the boiler and flush the water system while still hot. Thoroughly flush the system with clear water.

c. Refill the system using a quality water treatment such as Fernox MB1. For sealed systems, fill to the required Initial Design Pressure.

4.6 CHECKING THE GAS PRESSURE

With each module running measure each burner pressure at the module burner pressure test nipple.

The gas setting is factory adjusted to within the required range and should not normally need re-adjustment. If the reading is incorrect then check such factors as soundness of the air and flue pipe joints and the gas inlet pressure (20 mbar required). If all joints are sound and the gas inlet pressure is satisfactory remove the brass dust cap covering the burner pressure adjustment screw on the gas valve (See fig. 4.6). Set the gas pressure to the required value as stated on the databadge by turning the exposed burner pressure adjustment screw (clockwise will increase burner pressure, anti-clockwise will decrease burner pressure). This will ensure that combustion is good enough to allow combustion fine tuning to take place. Replace the brass dust cap to cover the burner pressure adjustment screw.

Fig 4.6 MODULE GAS VALVE

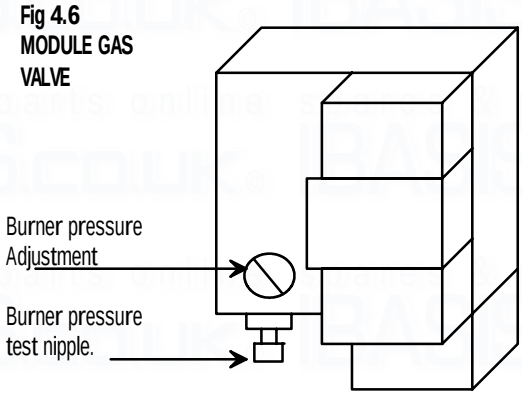

4.7 COMBUSTION FINE TUNING

Although the gas pressure is preset at the factory differing flue arrangements may require fine tuning of the gas pressures to produce the best combustion and ensure long burner life. It is advisable to check proper combustion by measuring gas input and the level of carbon dioxide, or oxygen, in the flue outlet from the boiler. Overfiring or underfiring the burner will reduce the longevity of the appliance.

Carbon dioxide is a colourless, odourless gas produced by all combustion processes. When the Keston condensing boiler is operating properly carbon dioxide (CO_2) levels will be between 8.2 and 8.5% CO_2 for natural gas.

To measure CO_2 levels in the Keston boiler remove the 1/8" plug from the flue outlet pipe inside the boiler (item 101, fig. 5.7.2). Insert the probe of a combustion analysis meter and sample the gases as instructed in the test equipment's instructions.

If the CO_2 levels need raising increase the gas output by turning the brass screw, under the metal cap in the front of the gas valve, clockwise. Reduce CO_2 levels by turning this screw anti-clockwise.

If CO_2 levels do not respond to adjustments the burner is probably running with too much gas pressure. If, for instance, a clockwise adjustment to the brass screw in the gas valve produces a decrease in CO_2 the burner is too fuel-rich and not enough oxygen is present for proper and complete combustion.

4.8 HANDING OVER TO THE USER

It is important to fully explain the following :

a. Procedure to light and turn off the boiler, including isolation of the electrical supply if necessary.

b. The function of the lockout feature must be explained :
If the a red light only is illuminated for more than 10 seconds, this means that the module has failed to light. Turn off the module and wait 20 seconds. Turn ON again and wait.
   i) If lockout recurs immediately then the gas supply should be checked as ON, otherwise consult a Service Engineer.
   ii) If it is not possible to relight, the module must be isolated and a Service Engineer called in to rectify the fault.

c. Advise that a reduction in the water pressure reading on the gauge, for sealed systems, indicates a leak which should be rectified before further use.

d. Advise that the appliance should be serviced by a competent person at least once a year.

e. Advise on frost precautions.

f. Hand over User Instructions.

5. FAULT FINDING

5.1 ELECTRICAL CONTROL SEQUENCE

When the power supply is established to the boiler and the main boiler on/off switch is in the "on" position the main on/off switch will be illuminated. Subsequently when the external controls are calling for heat, power will be fed back to the boiler connection strip at terminal 18. If the integral sequence controller detects the boiler flow temperature is below the required set point, one of the modules will be enabled causing that modules on/off switch, subject to being in the "on" position, to be illuminated. Provided all module temperature thermostats and pressure switches are closed, power will be fed to pins 1 & 2 on the module ignition control box, initiating the following sequence.

(1) The module lockout lamp (red) will be illuminated

(2) The fan will start.

(3) When the fan reaches running speed, the Air Pressure switch, normally open, will close which will start the ignition sequence and extinguish the red lockout lamp.

(4) After a pre-purge period of about 15 seconds, the module gas valve will open to allow gas to mix with the air at the suction side of the fan and the ignition spark will occur at the main burner.

(5) When the burner ignites, the flame is detected by the control box through the combined flame sensor/ignitor and the ignition spark is stopped. The boiler run lamp (green), the upper lamp adjacent to the flame symbol, will be illuminated. The boiler is now in its normal run condition.

(6) The burner will continue to operate until the gas valve interrupts the gas supply. The gas valve will be closed by the control box if power is interrupted to the boiler by any external control or the boiler thermostat. If an interruption to the gas supply causes loss of the flame, the control box will pause for approximately 10 seconds and then attempt to re-ignite the unit. If this attempt fails, i.e. due to continued lack of gas supply, the module will make two further attempts to ignite at intervals of approximately 1 minute and will then go to a lockout state (red lamp illuminated only). Once the gas supply has been resumed the module can be reset by turning the module off and then on again on the boiler control panel.

(7) The module can also be shut down by any of the flow limit, flow overheat and the flue overheat thermostats, gas low pressure switch and by the low water pressure switch.

In such an event the green (run) lamp, the upper lamp adjacent to the flame symbol, will be extinguished and only the red (lockout) lamp will be illuminated.

Dependant on the system loading the integral boiler sequence controller may enable the other module at any time, subject to that modules on/off switch being in the "ON" position. The sequence of operation shall be identical to that described above.

Any failure of the boiler to sequence in the above manner should be investigated using the following trouble shooting flow diagram.

Before attempting any electrical fault finding, always carry out preliminary electrical system checks. On completion of any service/fault finding task which has required the breaking and remaking of electrical connections, the checks, earth continuity, polarity, short circuit, resistance to earth must be repeated.

5.2 FAULT FINDING FLOW CHART

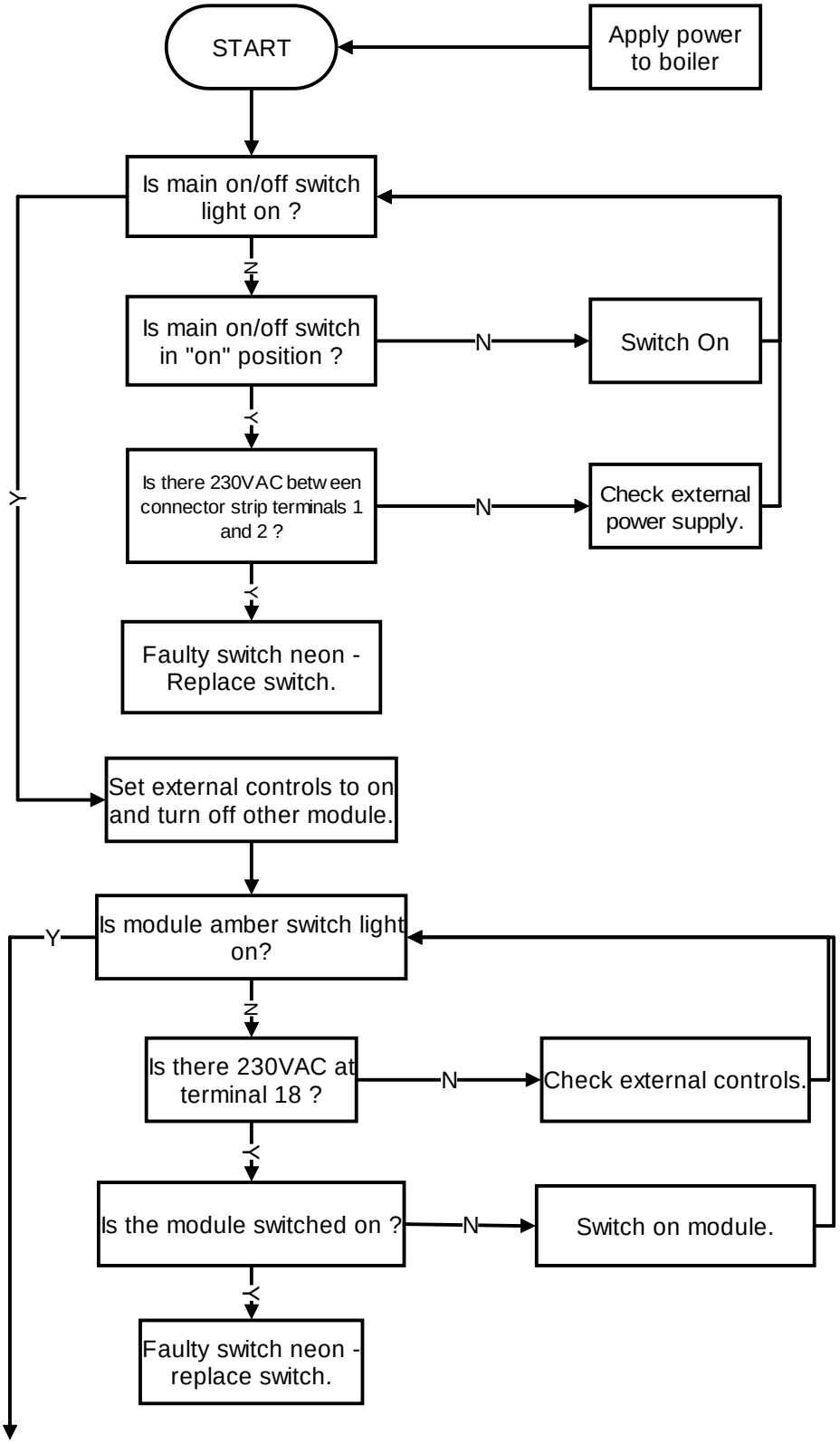

Continued on Sheet 2

Continued from sheet 1.

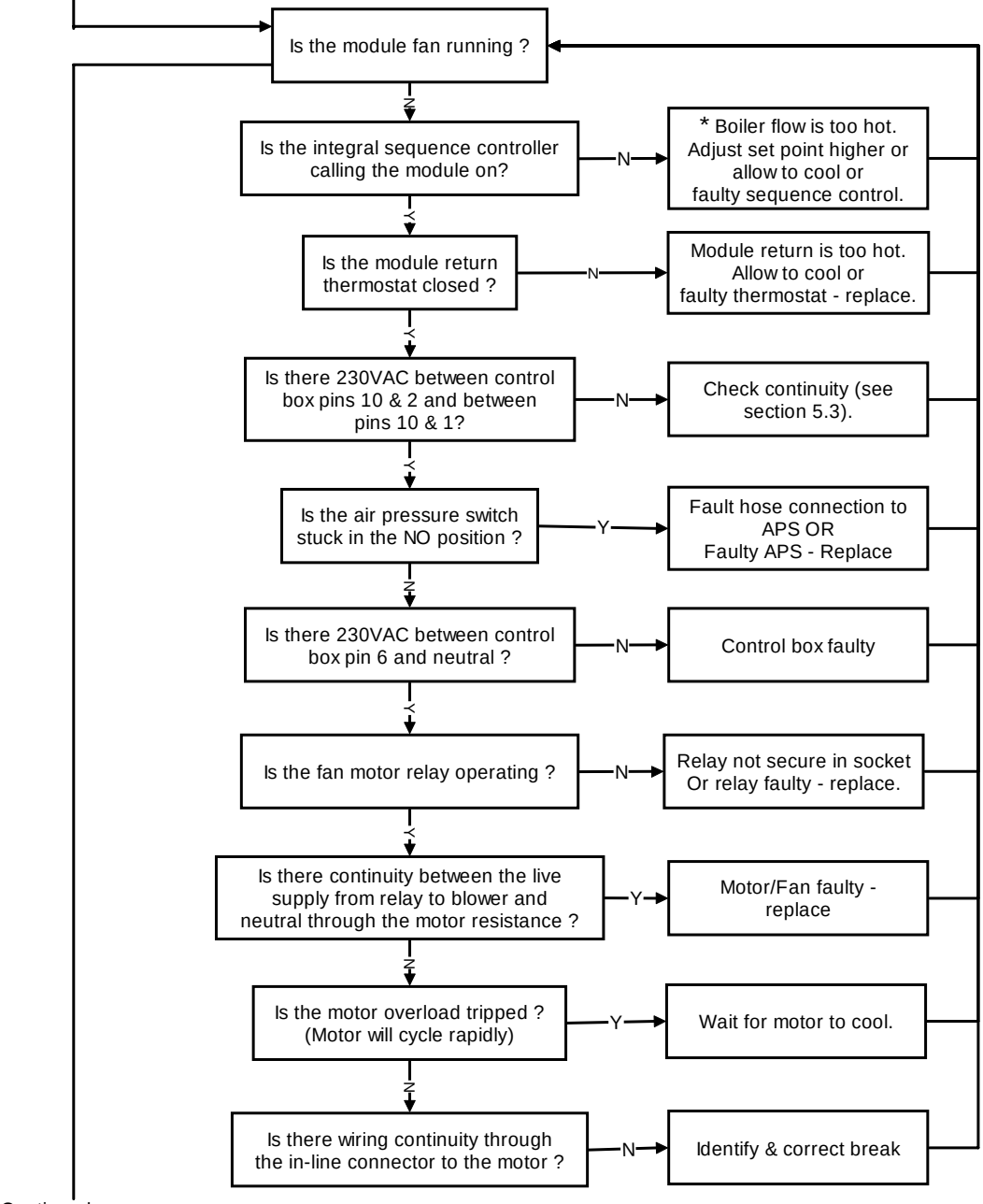

Continued on Sheet 3

* The integral sequence control can be temporarily by-passed for fault diagnosis purposes by moving the module link wire from module terminal 8 to module terminal 7.

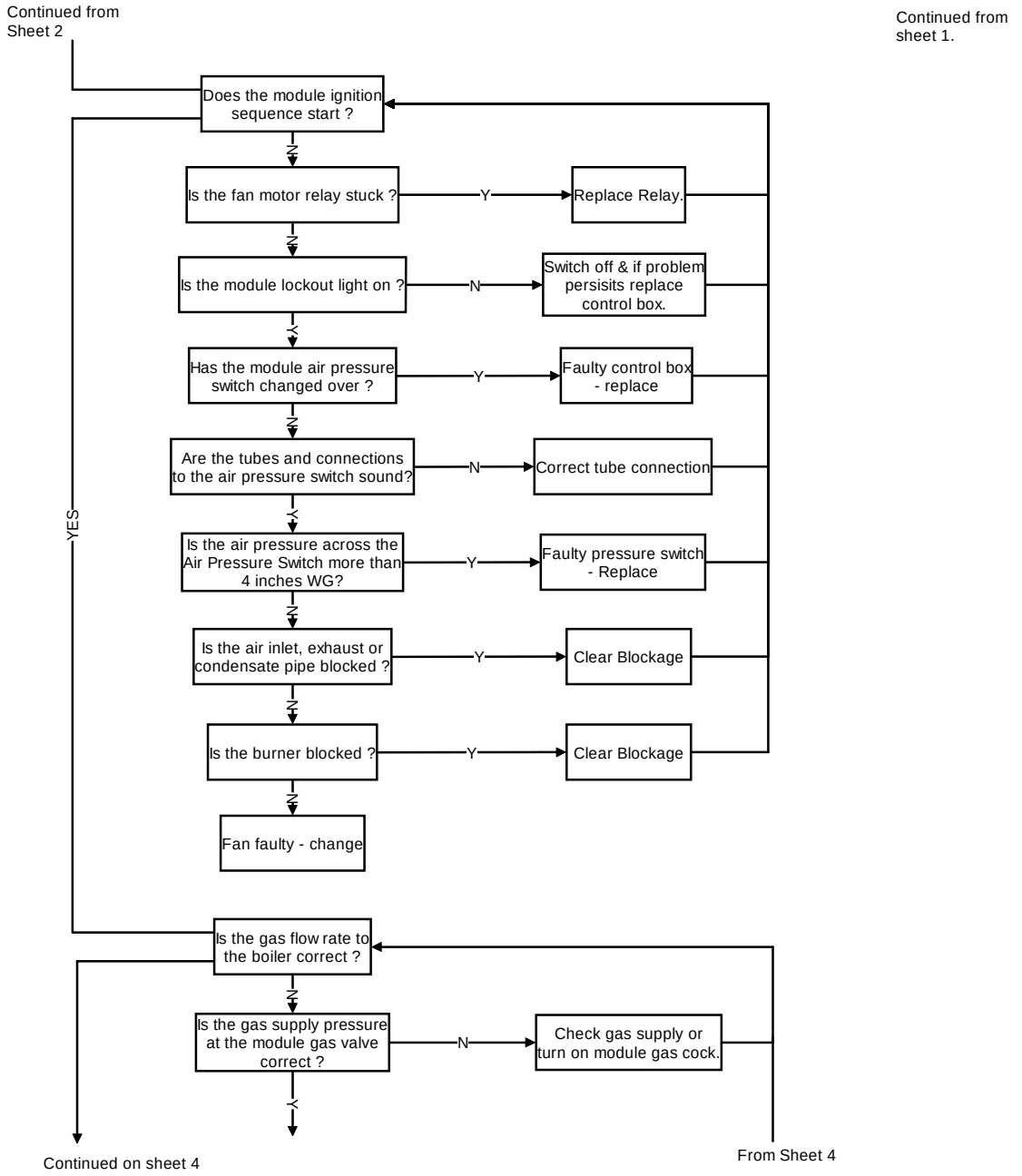
Continued from Sheet 2
Continued from sheet 1.
Does the module ignition sequence start ?
N
Is the fan motor relay stuck ?
Y
Replace Relay.
N
Is the module lockout light on ?
N
Switch off & if problem persisits replace control box.
Y
Has the module air pressure switch changed over ?
Y
Faulty control box - replace
N
Are the tubes and connections to the air pressure switch sound?
N
Correct tube connection
Y
Is the air pressure across the Air Pressure Switch more than 4 inches WG?
Y
Faulty pressure switch - Replace
N
Is the air inlet, exhaust or condensate pipe blocked ?
Y
Clear Blockage
N
Is the burner blocked ?
Y
Clear Blockage
N
Fan faulty - change
YES
Is the gas flow rate to the boiler correct ?
N
Is the gas supply pressure at the module gas valve correct ?
N
Check gas supply or turn on module gas cock.
Y
Continued on sheet 4
From Sheet 4

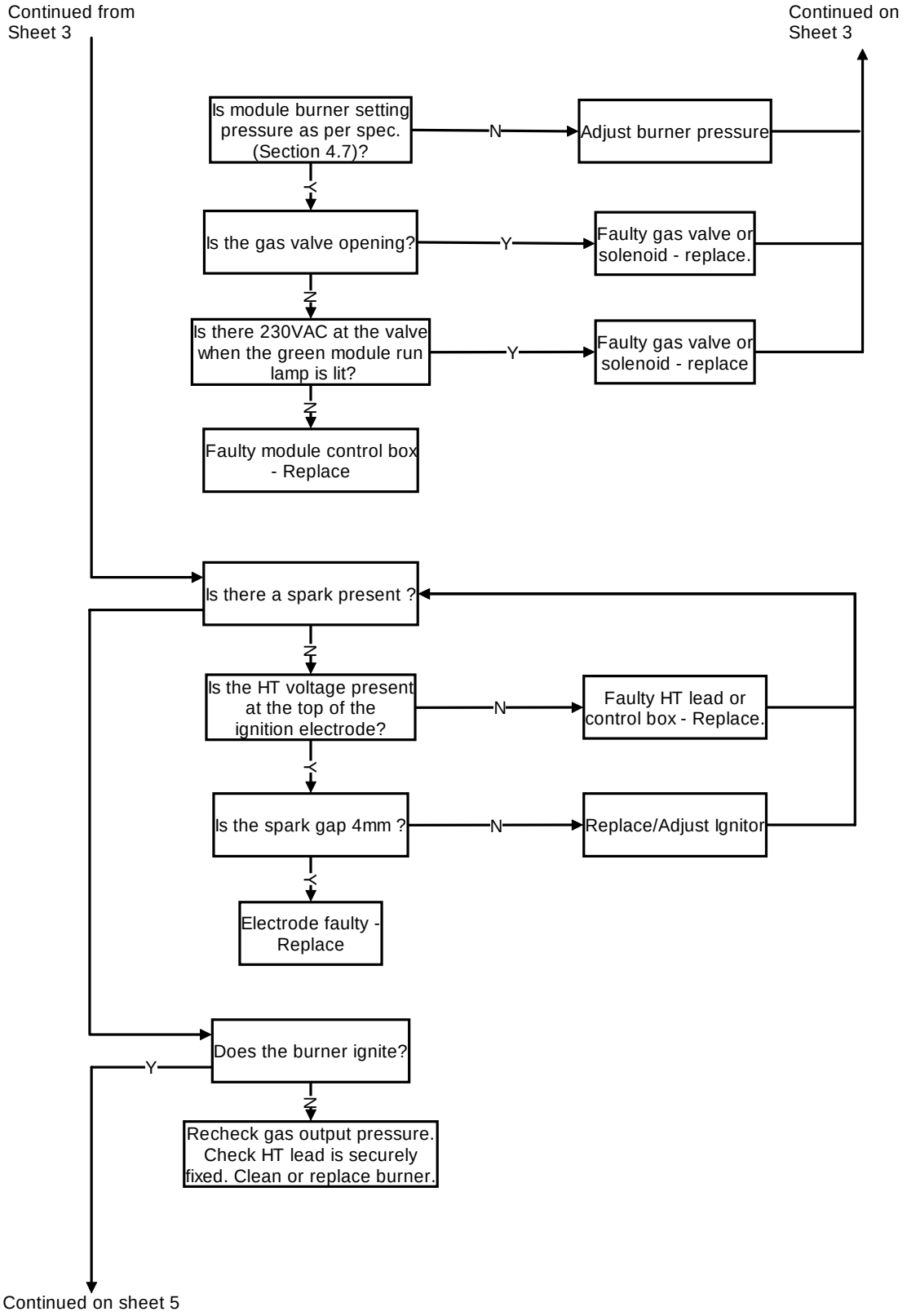
Continued from Sheet 3
Continued on Sheet 3
Is module burner setting pressure as per spec. (Section 4.7)?
N
Adjust burner pressure
Y
Is the gas valve opening?
Y
Faulty gas valve or solenoid - replace.
N
Is there 230VAC at the valve when the green module run lamp is lit?
Y
Faulty gas valve or solenoid - replace
N
Faulty module control box - Replace
Is there a spark present ?
N
Is the HT voltage present at the top of the ignition electrode?
N
Faulty HT lead or control box - Replace.
Y
Is the spark gap 4mm ?
N
Replace/Adjust Ignitor
Y
Electrode faulty - Replace
Does the burner ignite?
Y
N
Recheck gas output pressure. Check HT lead is securely fixed. Clean or replace burner.
Continued on sheet 5

Continued from sheet 4

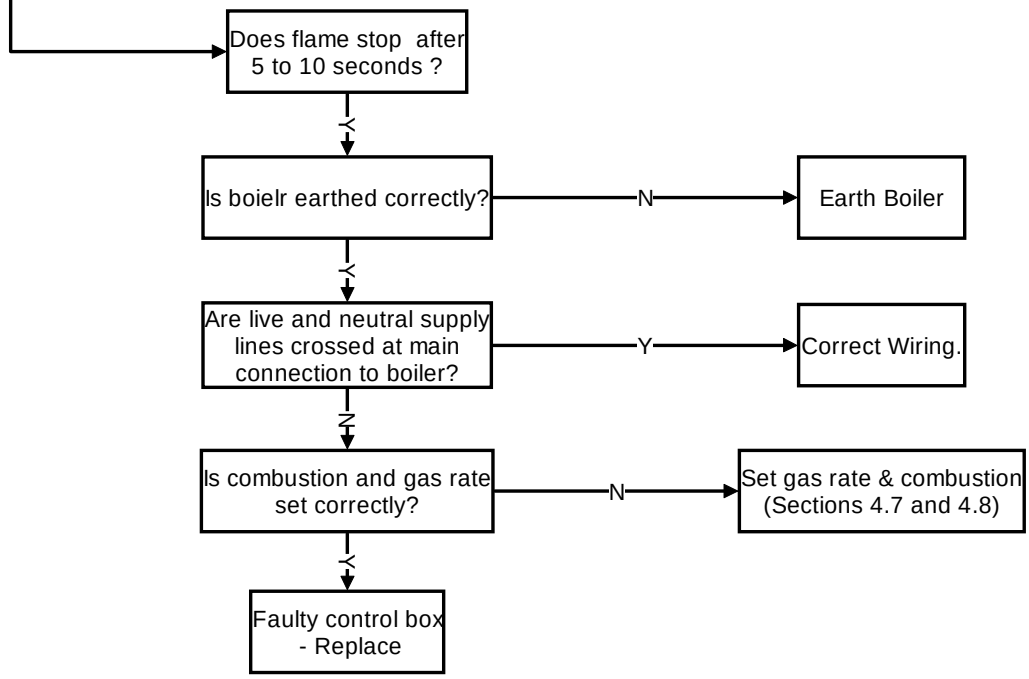

5.3 CONTINUITY CHECKING

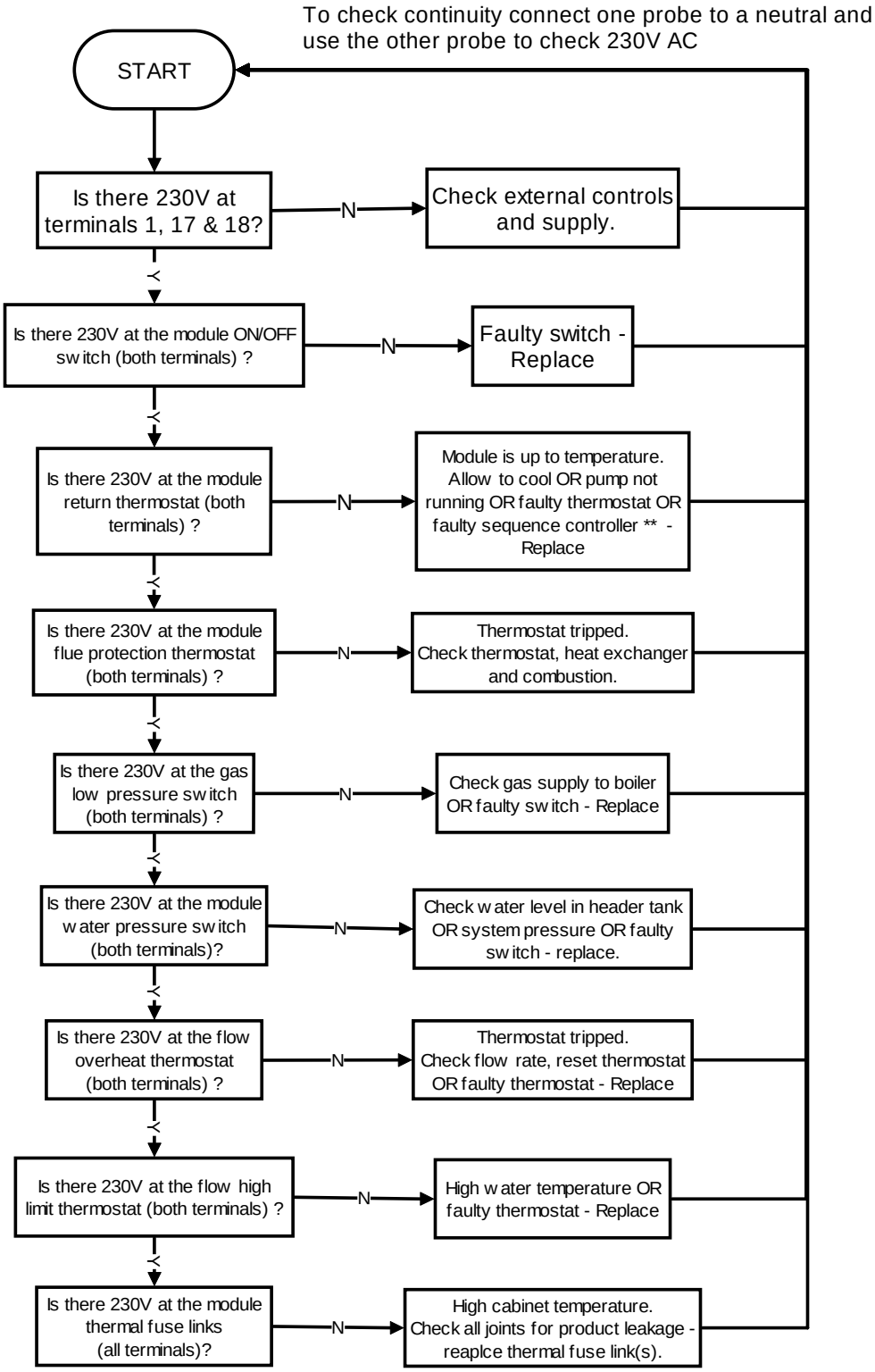

** The sequence controller can be temporarily by-passed by moving the link between terminals 8 and 9 on the module terminal block to terminals 7 and 9.

5.4 MODULE FUNCTIONAL FLOW WIRING DIAGRAM

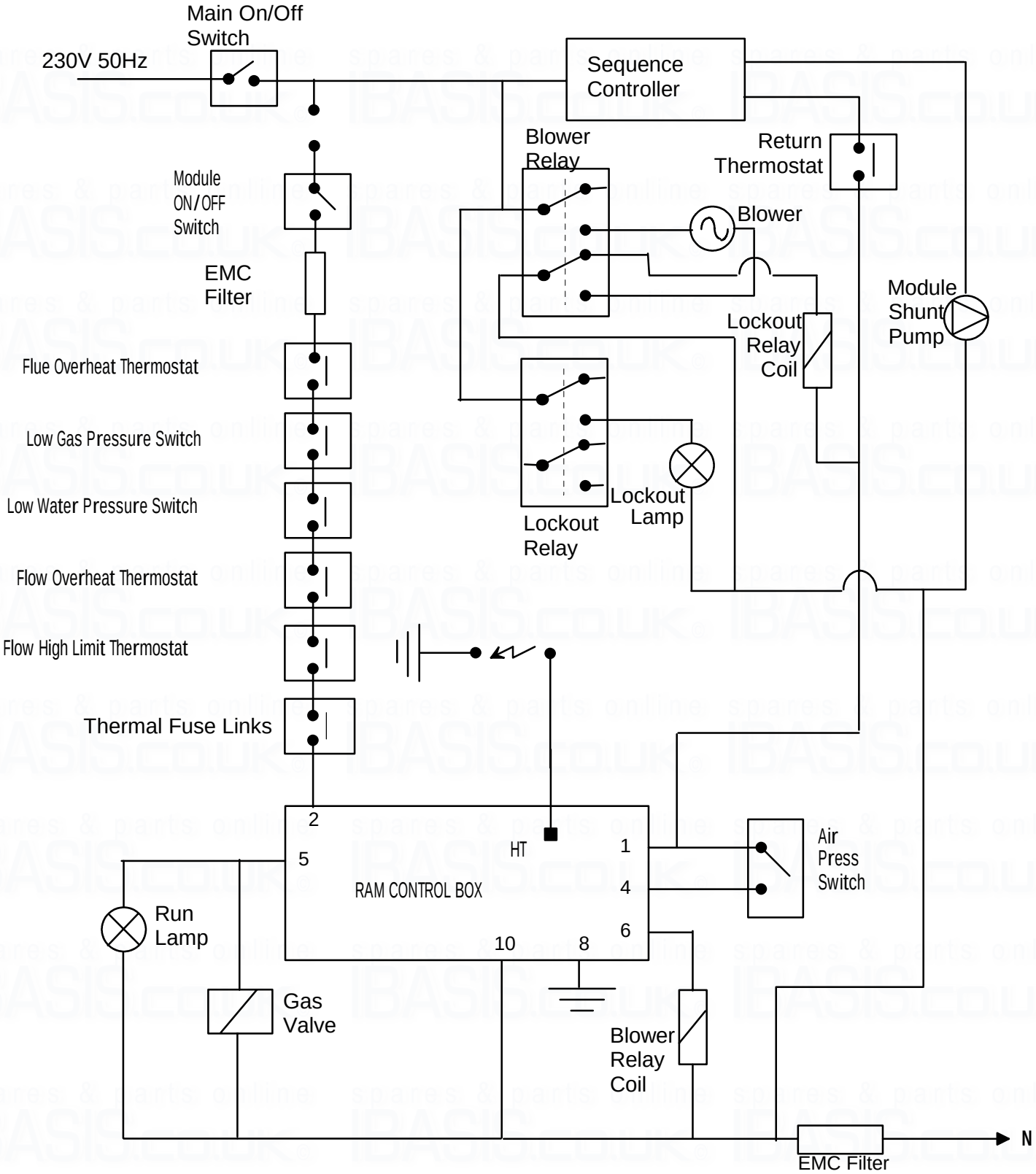

5.5 FULL ELECTRICAL WIRING DIAGRAM

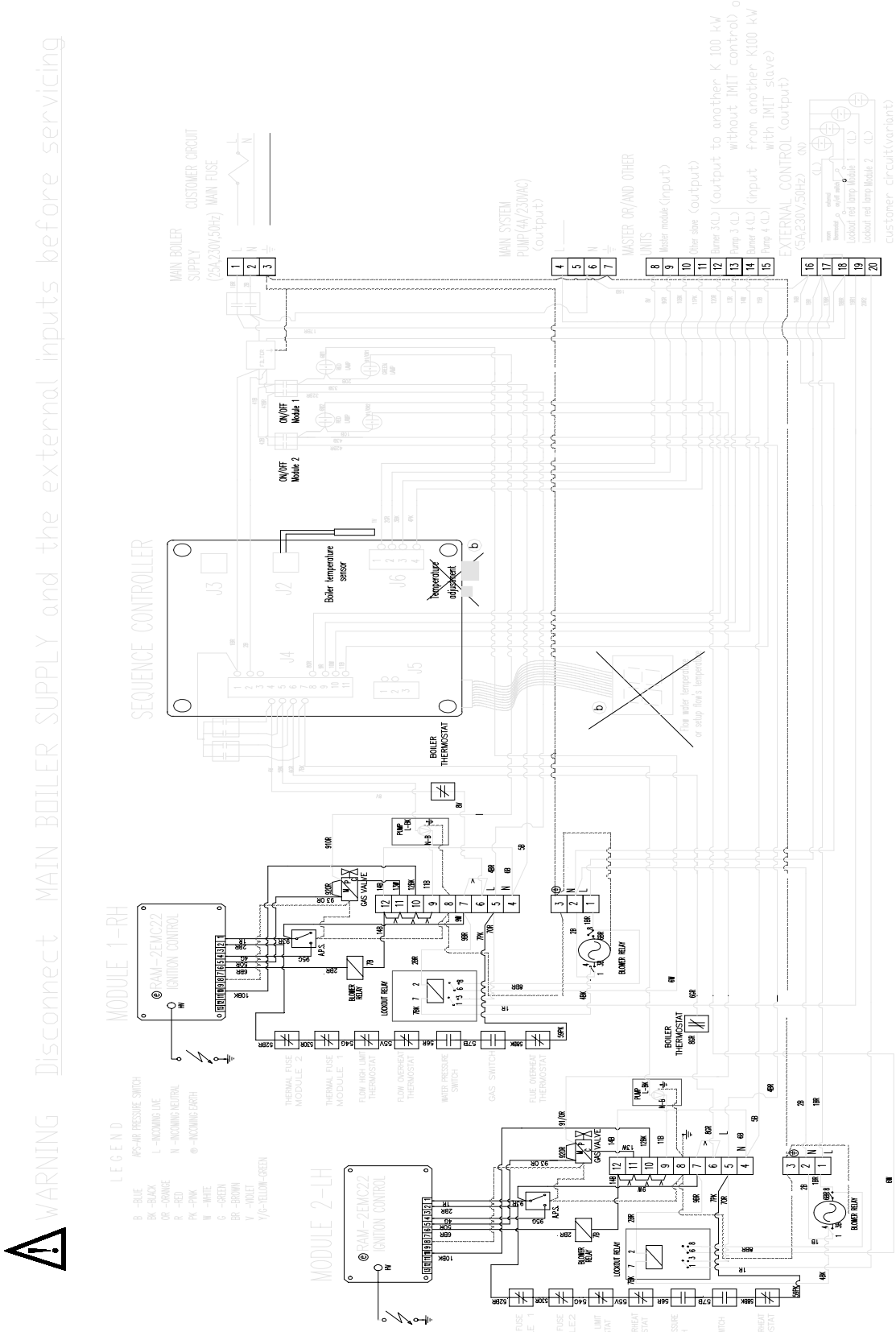

5.6 ILLUSTRATED WIRING DIAGRAM

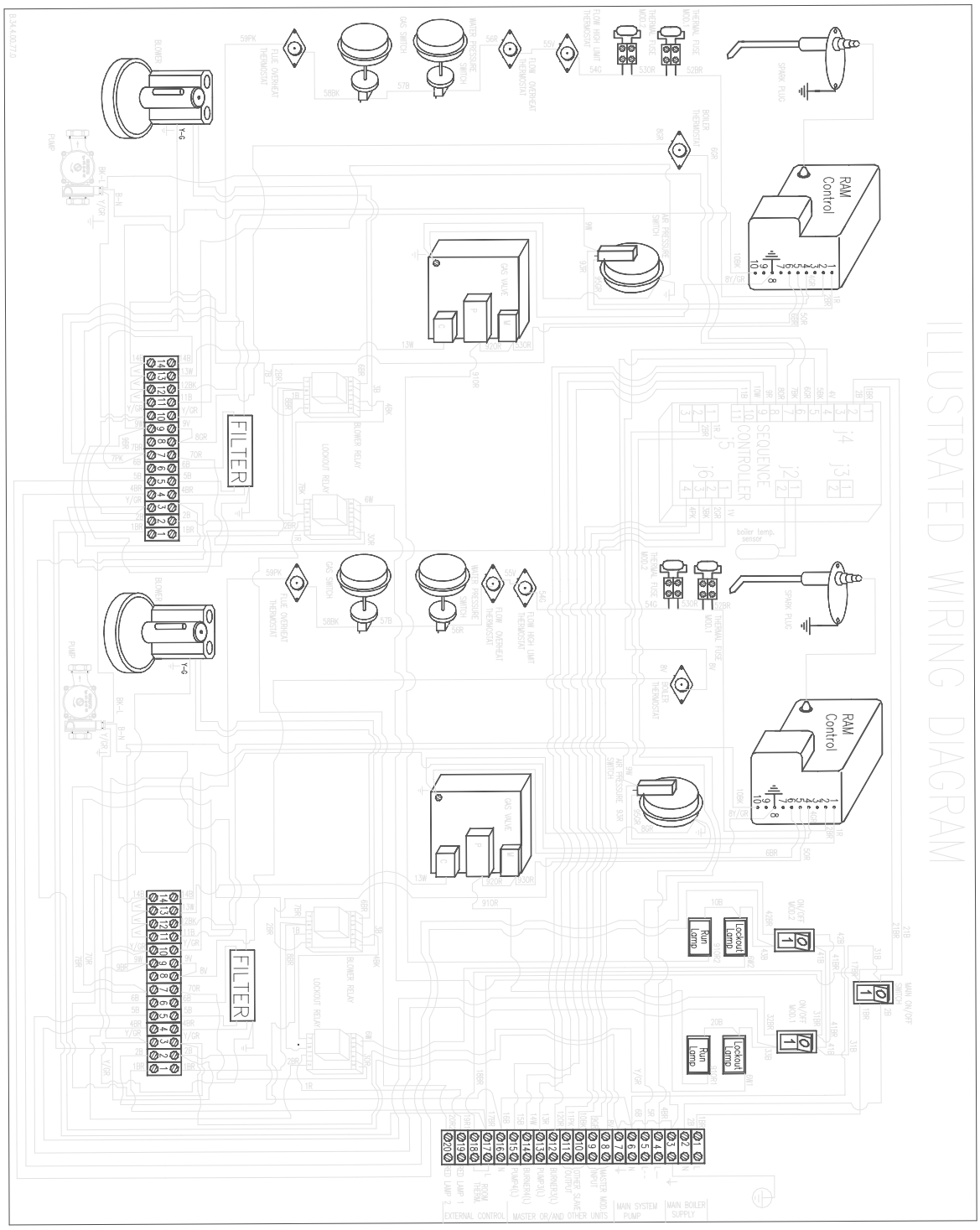

5.7 Exploded Assembly Diagrams

5.7.1 Casing Assembly

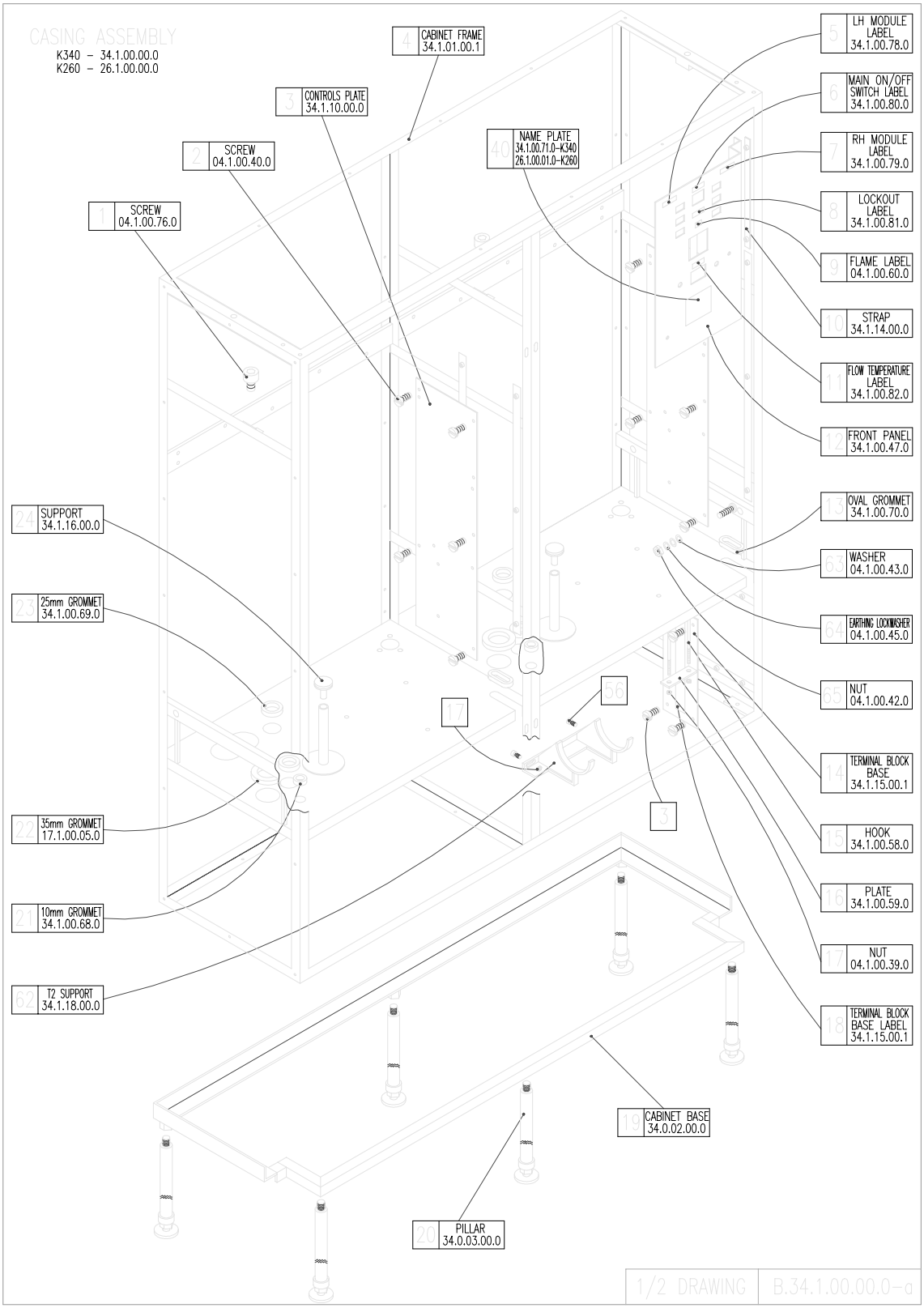

5.7.2 Waterway, Condensate & Flue Assembly

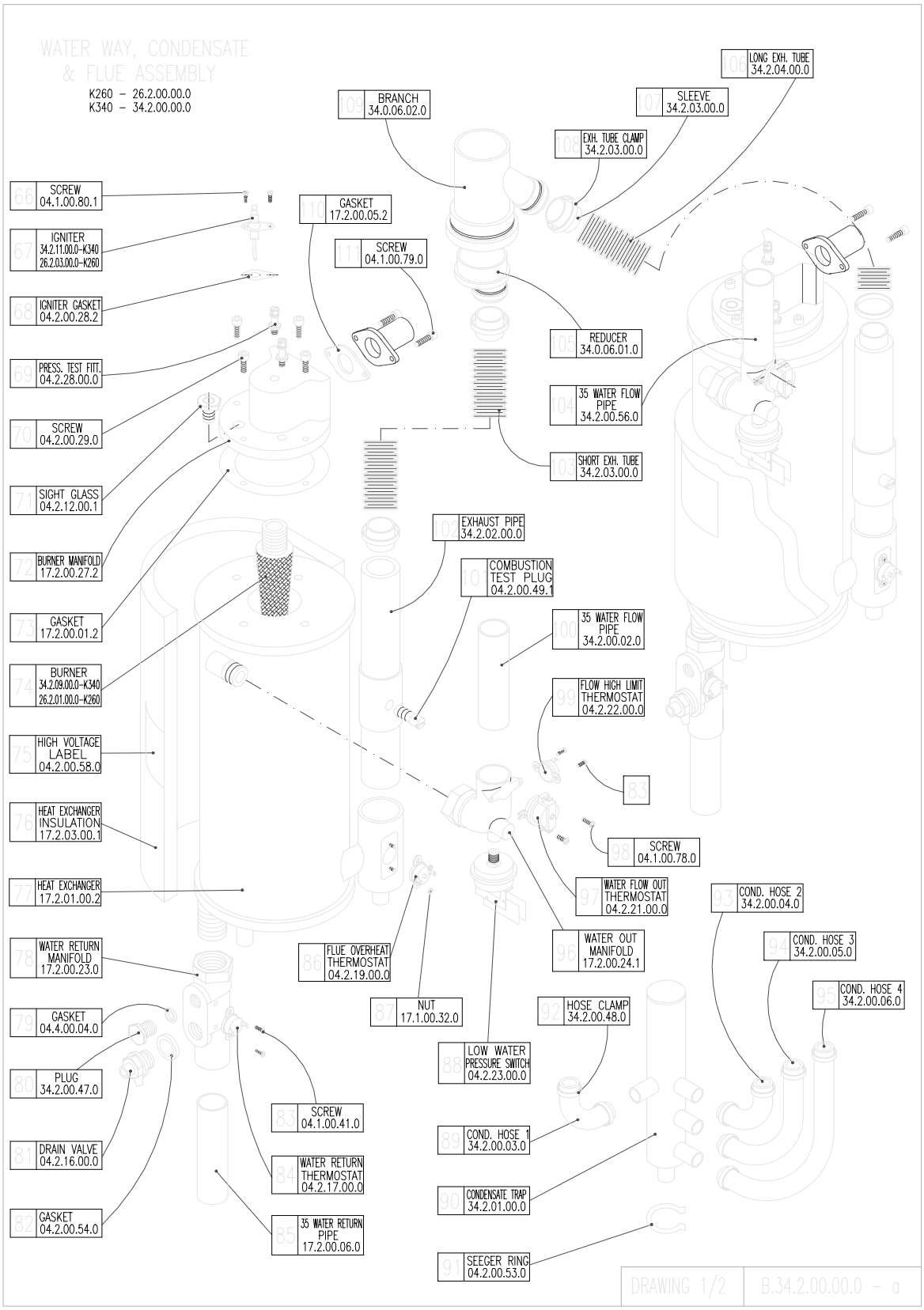

5.7.3 Air - Gas Assembly

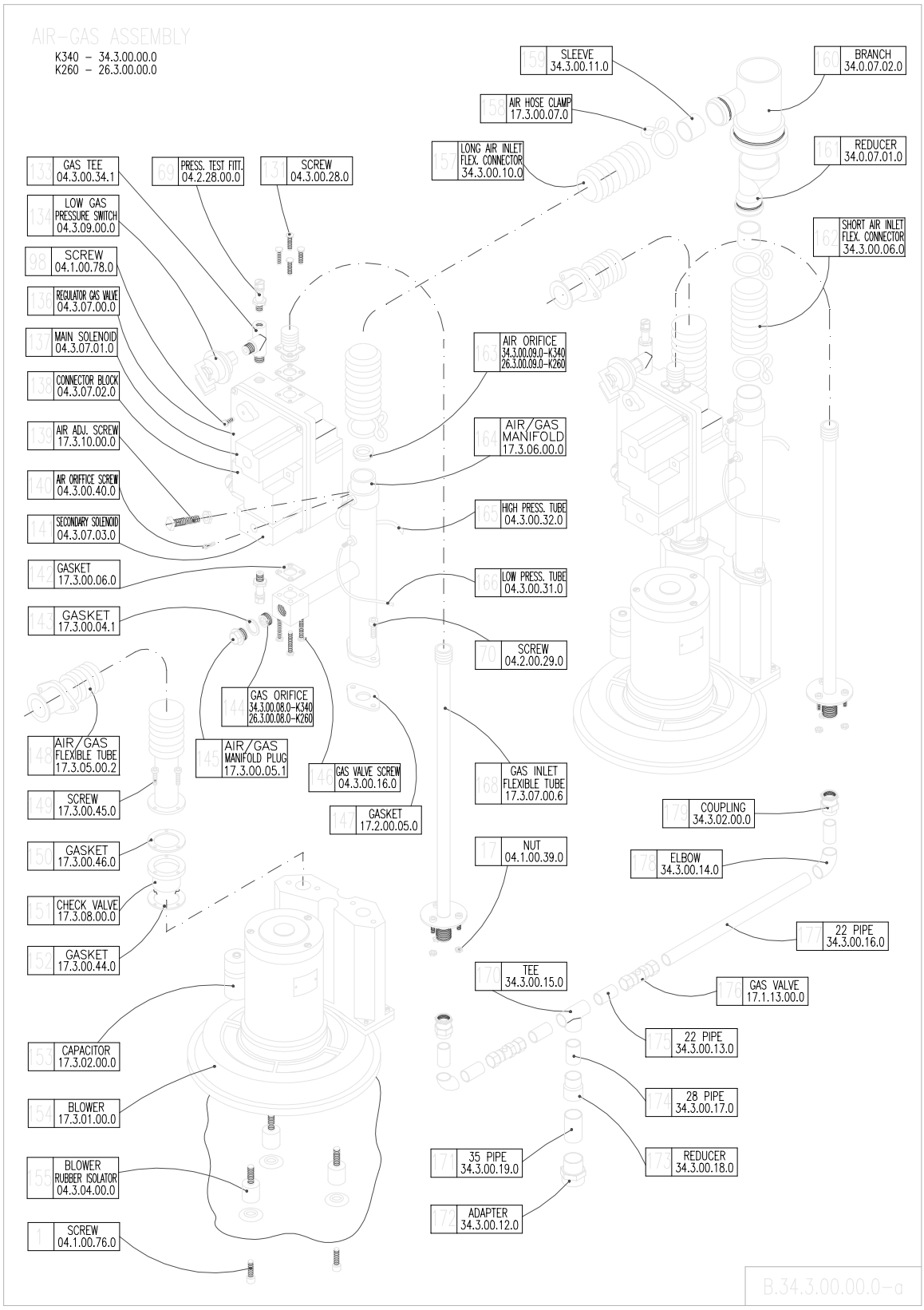

5.7.4 Controls Assembly

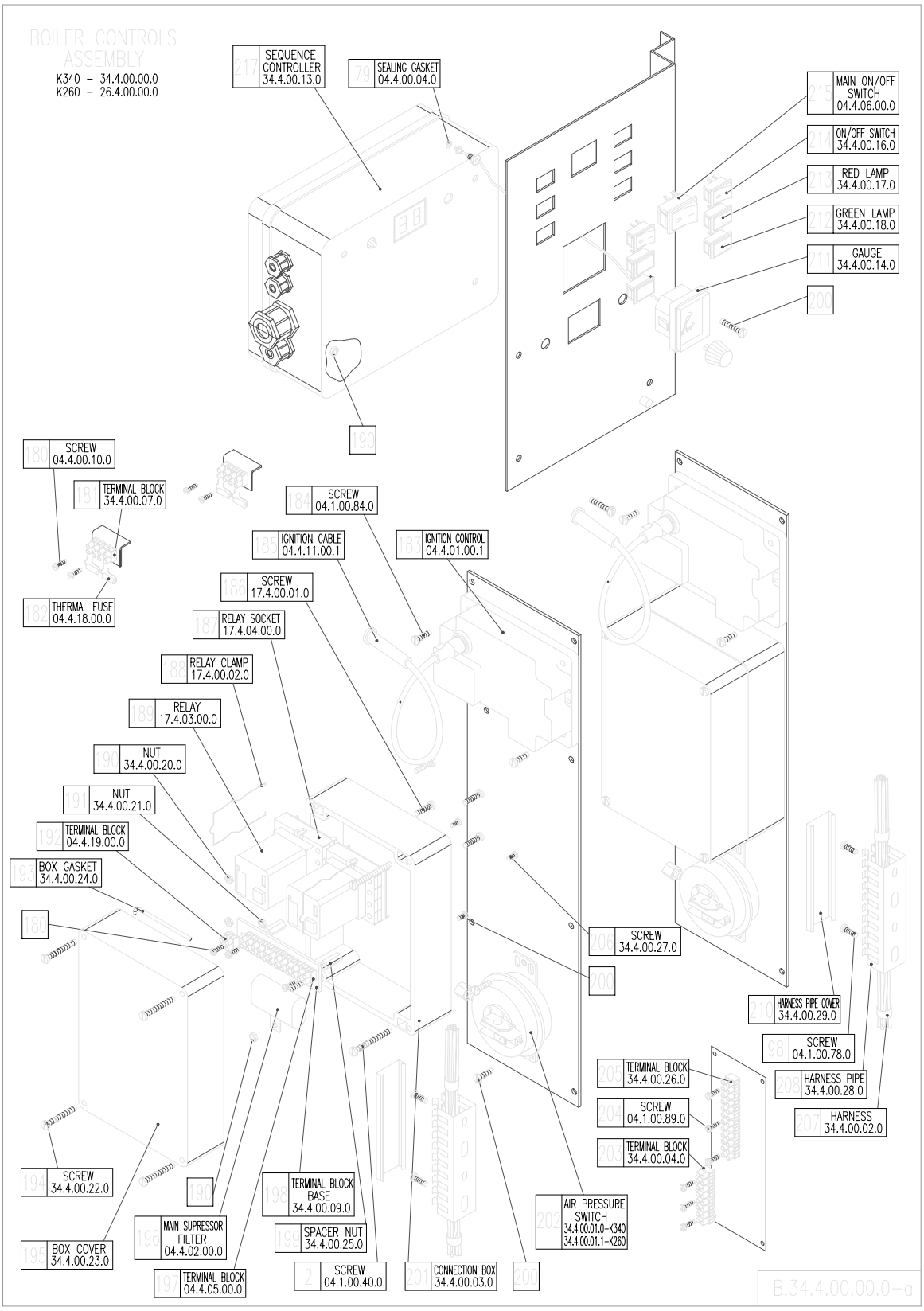

5.7.5 Exploded Diagrams Parts Reference List

Casing Assembly (Fig 5.7.1)

GC Number	Code	Description
-	4	Cabinet Frame
-	40	Name Plate
-	12	Front Panel

Waterway, Condensate & Flue Assembly (Fig. 5.7.2)

GC Number	Code	Description
114 115	77	Heat Exchanger
-	74	Burner
114 118	73	Burner Head Gasket
114 028	71	Sight Glass
375 527	68	Ignitor Gasket
114 120	67	Spark Ignition Electrode
114 029	69	Pressure Test Nipple
-	90	Condensate Trap
375 530	84	Boiler Return Thermostat
375 532	86	Flue Overheat Thermostat
114 043	101	Combustion Test Plug
375 533	97	Flow Overheat Thermostat
375 534	99	Flow High Limit Thermostat
114 045	88	Water Pressure Switch

Air - Gas Assembly (Fig. 5.7.3)

GC Number	Code	Description
114 131	154	Combustion Blower
-	163	Air Orifice
375 536	136	Gas Valve
114 029	69	Pressure Test Nipple
114 073	134	Low Gas Pressure Switch
-	144	Gas Injector

Boiler Controls Assembly (Fig. 5.7.4)

GC Number	Code	Description
-	217	Sequence Controller
E01-074	183	Ignition Control Box
-	202	Air Pressure Switch
-	205	Electrical Terminal Block
-	215	Main On/Off Switch
-	214	Module On/Off Switch
	212	Module Green (Run) Lamp
	213	Module Red (Lockout) Lamp
114 080	211	Pressure Gauge

6. ROUTINE (ANNUAL) SERVICING

To ensure the continued safe and efficient operation of the boiler it is necessary to carry out routine servicing at regular intervals. The frequency of the servicing will depend upon the particular operating conditions, but it is recommended that an annual service should be carried out by a qualified engineer.

It is the law that any service work must be carried out by competent qualified persons.

6.1 Pre-Service Checks

It is recommended that an inspection should be carried out prior to shutting down the unit for servicing. Open the front doors by turning the door catches 90 degrees. The following items should be observed:

a. Smooth starting and running of each modules blower.
b. Smooth lighting of each modules burner.
c. Check for leakage of gas, gas/air or combustion products.
d. Check for condensate leaks.
e. Check the colour and appearance of the flame on each module. A sky blue flame slightly off the burner gauze is normal. The burner itself should appear dark.
f. Check that the temperature differential between the flow and return pipes is less than 15°C. The temperature difference should be between 10°C and 15°C.
g. Check for water soundness.
h. Inspect the flue vent and air intake pipework. Joints must be sound and all pipework well bracketed.
i. Check that there is a steady fall back to the boiler from the flue pipe to allow condensate to run back into the boiler.
j. With the boiler operating at a low return temperature (i.e. less than 50°C) check that the condensate flows freely from the condensate line.

6.1.1 Module Burner & Heat Exchanger Blockage Checks

i) Turn off the boiler & shut off the gas supply to the boiler.
ii) Remove the pressure point screws from points A & B on the heat exchanger for the left hand module. Attach a differential gauge.
iii) Turn on the boiler and wait for the fan to reach full speed. Obviously the burner will not light.
iv) The pressure difference should be less than 10.0 mbar. If not clean the burner.
v) Turn off the electrical supply to the boiler.
vi) Remove the pressure point screw from point C and transfer the tube from point A to C, replacing the screw on point A.
vii) Turn on the electrical supply to the boiler (gas still off), wait for the fan to reach full speed.
viii) The pressure difference should be between 9.5 mbar and 13.5 mbar (lowest value represents new appliance). If not clean heat exchanger.
ix) Disconnect the gauge from point B. Refit the screw.
x) Read pressure of point C.
xi) The maximum pressure should be 3.5 mbar. If the pressure is greater than this check the flue for blockage.
xii) Turn off the electrical supply to the boiler
xiii) Repeat the procedure for the right hand module.
xiv) Remove the pressure gauge tube and refit the screw.
xv) Open the gas service cock.

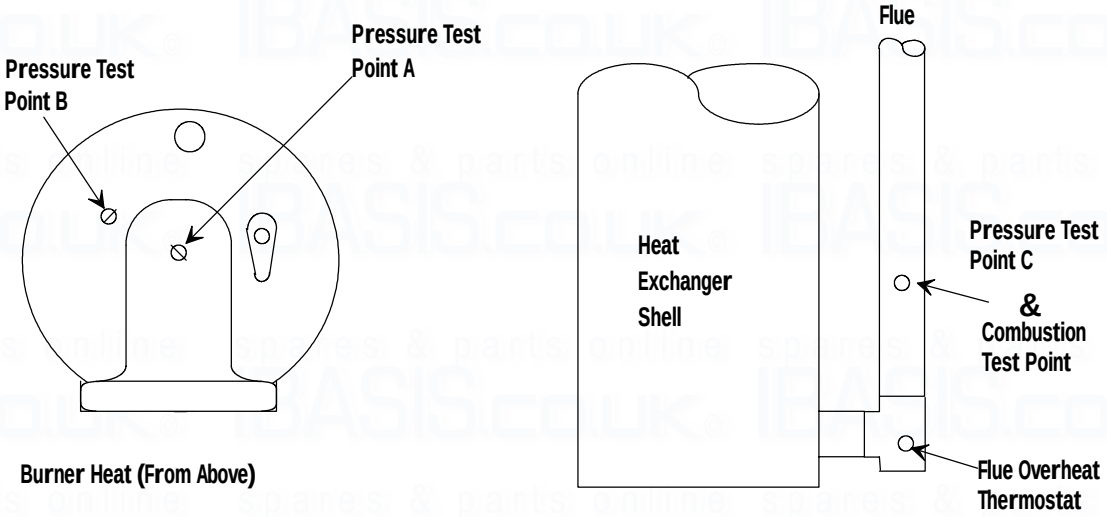

Fig 6.1.1 Module Pressure Test Point Locations

6.2 Recommended Routine Service

The procedure detailed below should be carried out on each boiler module in turn. The integral boiler controller ensures both modules are loaded evenly over a year of operation.

a. Remove the burner head (Section 7.7) and inspect the burner appearance. Black markings or other discolourations on the gauze indicate too much gas or a lack of air. Any breakages or damage to the burner mesh indicate the burner must be replaced.

b. If necessary, either due to discolouration or a high pressure differential between points A & B in the pre-service checks, clean the burner with a mild household detergent and rinse under a hot running tap.

c. If necessary, either from visual inspection or a high pressure differential between points B & C in the pre-service checks, clean the heat exchanger using a suitable stiff plastic bristle brush, vacuum out any large particles and flush the heat exchanger with fresh water until the water flowing from the condensate drain is clear.

d. Remove the condensate trap (Section 7.10) and clean by flushing through with clean running water.

e. Check the electrode mounted on the burner head. If the point is damaged or burnt replace it.
Check that the spark gap measures 4 mm.

f. Replace the burner head, renewing the gasket if necessary, and reconnect the gas/air supply and the ignition lead. Ensure the flanged gas/air supply joint is air tight.

g. Turn on the electrical supply to the boiler and allow the boiler to reach operating temperature levels.

h. Visually inspect the burner through the glass spy hole at the burner head (a small mirror will prove useful).

i. Recheck the burner pressure by following the procedure detailed in Section 4.7

j. Remove the combustion test point plug from the flue pipe. This is situated around 150mm (6ins) from the bottom of the flue elbow at its connection to the heat exchanger.

k. Using an approved combustion tester sample the flue products via the combustion test point. CO_2 levels of between 8.2% and 8.5% should be observed. If such levels are not observed tune the combustion as described in Chapter 4 - Commissioning. Also check the gas flow as detailed in Sections 4.8 and 4.9

l. Replace the combustion test point plug.

m. Check all joints for soundness up to the gas burner.

n. Repeat the procedure for the other module.

7. REPLACEMENT OF PARTS

INDEX

7.0 GENERAL
7.1 PRECAUTIONS
7.2 ACCESS
7.3 PROCEDURES - GENERAL
7.4 ELECTRICAL
- 7.4.1 ON/OFF SWITCH
- 7.4.2 BOILER THERMOSTAT
- 7.4.3 FLOW OVERHEAT, FLOW HIGH LIMIT & FLUE PROTECTION THERMOMSTATS
- 7.4.4 WATER PRESSURE SWITCH
- 7.4.5 IGNITION CONTROL BOX
- 7.4.6 AIR PRESSURE SWITCH
- 7.4.7 COMBUSTION BLOWER
- 7.4.8 GAS CONTROL VALVE
- 7.4.9 GAS LOW PRESSURE SWITCH

7.5 GAS ORIFICE
7.6 SPARK IGNITION/FLAME DETECTION ELECTRODE
7.7 BURNER HEAD & BURNER
7.8 HEAT EXCHANGER
7.9 AIR FILTER
7.10 CONDENSATE TRAP
7.11 PRESSURE GAUGE
7.12 SIGHT GLASS
7.13 HT IGNITION LEAD
7.14 AIR ORIFICE

7.0 GENERAL

The following must always be carried out by a competent/qualified person.

7.1 PRECAUTIONS

i) Always switch off the mains electricity supply

ii) Gain access to the appliance (Section 7.2) and turn off the gas supply at the appliance service cock.

WARNING : Parts of the boiler internal wiring will remain live even after turning the boiler ON/OFF switch to the OFF position. Shut off the power supply at the isolating switch before working on the appliance.

7.2 ACCESS

i) Open the front doors by turning the locating catches 90 degrees to release.

7.3 REPLACEMENT PROCEDURES

i) Always replace in the reverse order unless otherwise stated.

ii) Electrical connections must be remade in accordance with the Wiring Diagram (Section 5.5).

iii) Test the soundness of any gas carrying or water carrying joint broken during the service procedures.

7.4 ELECTRICAL COMPONENTS

7.4.1 Master and Module On/Off Switches (Fig. 5.7.4 items 214 & 215)

i) Isolate the appliance (Section 7.1)

i) Gain access (Section 7.2)

iii) Remove the push on connectors from the switch taking note of the correct positions.

iv) Press in the catches and push the switch forwards through the control panel.

v) Reassemble (Section 7.3)

v) Check for correct operation of the switch.

7.4.2 Module Boiler Return Thermostats (Fig. 5.7.2 item 84)

i) Isolate the appliance (Section 7.1)

ii) Gain access (Section 7.2)

iii) Remove the push on connectors from the thermostat taking note of the correct positions.

iv) Unscrew the two retaining screws and remove the thermostat.

v) Reassemble (Section 7.3)

NB: When fitting the new thermostat it is an advantage to smear a thin film of heat sink compound between the thermostat and mounting surface. This, combined with fitting the new thermostat tightly to the mounting surface, ensures a good contact.

7.4.3 Module Flow Overheat (Fig. 5.7.2 item 97) , Flow High Limit (Fig. 5.7.2 item 99) & Flue Protection Thermostats (Fig. 5.7.2 item 86)

i) Isolate the appliance (Section 7.1)

ii) Gain access (Section 7.2)

iii) Remove the push on connectors from the thermostat taking note of the correct positions.

iv) Unscrew the two retaining screws and remove the thermostat.

v) Reassemble (Section 7.3)

NB: When fitting the new thermostat it is an advantage to smear a thin film of heat sink compound between the thermostat and plate. This, combined with fitting the new thermostat tightly to the plate, ensures a good contact.

7.4.4 Module Water Pressure Switch (Fig. 5.7.2 item 88)

i) Isolate the appliance (Section 7.1)

ii) Shut off the water supply to the appliance.

iii) Gain access (Section 7.2)

iv) Drain the system to below the level of the appliance using the drain off tap at the base of each heat exchanger.
v) Remove the push on connectors from the water pressure switch taking note of the correct positions.
vi) Unscrew the pressure switch.
vii) Reassemble (Section 7.3).
viii) Refill the system (See Section 4 - Commissioning).

7.4.5 Module Ignition Control Box (Fig. 5.7.4 item 183)

i) Isolate the appliance (Section 7.1)
ii) Gain access (Section 7.2)
iii) Remove the HT ignition lead.
iv) Pull off the multi-pin connector away from the box.
v) Unscrew the two screws securing the control box to the casing and remove the box.
vi) Reassemble (Section 7.3)

7.4.6 Module Air Pressure Switch (Fig. 5.7.4 item 202)

i) Isolate the appliance (Section 7.1)
ii) Gain access (Section 7.2)
iii) Remove the push on connectors from the air pressure switch taking note of the correct positions.
iv) Disconnect the union to one plastic tube connection and pull off the second plastic tube from the air pressure switch.
v) Unscrew the two screws mounting the air pressure switch body to the boiler casing.
vi) Reassemble (Section 7.3)
NB: Ensure the yellow/green earth connection tag is securely fixed behind the lower mounting screw.

7.4.7 Module Combustion Blower (Fig. 5.7.3 item 154)

NB: This unit is heavy and must therefore be handled carefully when replacing.
i) Isolate the appliance (Section 7.1)
ii) Gain access (Section 7.2)
iii) Disconnect the wires connecting the blower in the blower motor connection box.
vi) Remove the allen screws fixing the air intake pipe flange and the gas/air mixture pipe flange to the blower.
v) Unscrew the three bolts fixing anti-vibration mounts to the combustion blower through the base of the blower shelf.
vi) Reassemble (Section 7.3)
NB: When reassembling inspect any gaskets for damage and replace if necessary.
vii) Reset the gas rate (See Section 4 - Commissioning)

7.4.8 Module Gas Control Valve (Fig. 5.7.3 item 136)

i) Isolate the appliance (Section 7.1)
ii) Gain access (Section 7.2)
iii) Remove the cover concealing the electrical connections on the front of the gas valve.
iv) Remove the push on connectors exposed taking note of the correct positions.
v) Remove the push on connectors to the gas low pressure switch taking note of the correct positions.
vi) Remove the earth connection to the side of the gas valve.
vii) Remove the plastic air tube to the base of the gas valve.
viii) Remove the four allen screws securing the gas inlet flanged connections to the gas control valve.
ix) Undo the four bolts fixing the base of the gas control valve to the gas outlet block.
x) Remove the gas valve.
xi) Unscrew the gas low pressure switch at its connection to the gas control valve body.

xii) Reassemble (Section 7.3)
xiii) Reset the gas rate (See Section 4 - Commissioning)

7.4.9 Module Gas Low Pressure Switch (Fig. 5.7.3 item 134)

i) Isolate the appliance (Section 7.1)
ii) Gain access (Section 7.2)
iii) Remove the push on connectors to the gas low pressure switch taking note of the correct positions.
iv) Unscrew the gas low pressure switch from the brass holder.
v) Reassemble (Section 7.3)

7.5 MODULE GAS ORIFICE (Fig 5.7.3 item 144)

i) Isolate the appliance (Section 7.1)
ii) Gain access (Section 7.2)
iii) Unscrew and remove the brass plug from the gas outlet block.
iv) Remove the rubber seal from the injector housing.
v) Insert a flat blade screwdriver into the exposed hole and unscrew the gas injector.
vi) Check the injector is the correct size for the boiler size.
vii) Reassemble (Section 7.3)
NB: Ensure that the injector is screwed fully home
viii) Reset the gas pressure and combustion (See Section 4 - Commissioning)

7.6 MODULE SPARK IGNITION/FLAME DETECTION ELECTRODE (Fig. 5.7.2 item 67)

i) Isolate the appliance (Section 7.1)
ii) Gain access (Section 7.2)
iii) Remove the pull off HT lead to the spark ignition electrode.
iv) Remove the burner head (Section 7.7 steps iv) to vi)).
v) Undo the screws to the spark ignition electrode flange located on the burner head and withdraw the spark ignition electrode.
vi) Reassemble (Section 7.3)
NB: When reassembling inspect the gasket for damage and replace if necessary.
With the new spark ignition electrode in place it is essential to ensure the gap between the tip of the electrode and the burner surface is 4mm. Distances above or below 4mm will affect ignition performance. If necessary gently bend the electrode taking care not to damage the ceramic insulator.

7.7 MODULE BURNER HEAD & BURNER (Fig. 5.7.2 items 72 & 74)

i) Isolate the appliance (Section 7.1)
ii) Gain access (Section 7.2)
iii) Remove the pull off HT lead to the spark ignition/flame detection electrode head.
iv) Remove the two allen screws fixing the flange gas/air mixture pipe connection to the burner head.
v) Remove the five allen screws fixing the burner head to the top of the heat exchanger.
vi) Withdraw the burner & burner head from the top of the heat exchanger.
vii) Unscrew the burner from the burner head taking care not to damage the burner mesh. (grip the burner on the collet only).
viii) Reassemble (Section 7.3)
NB: When reassembling inspect any gaskets for damage and replace if necessary.
Set the spark gap as detailed in Section 7.6
ix) Reset the gas rate (see Section 4 - Commissioning)

7.8 MODULE HEAT EXCHANGER (Fig. 5.7.2 item 77)

i) Isolate the appliance (Section 7.1)
ii) Gain access (Section 7.2)
iii) Shut of the water supply to the appliance.
iv) Remove the burner head (Section 7.7)
v) Drain the system to below the level of the appliance using the drain off tap at the base of the heat exchanger.
vi) Remove the boiler thermostat (Section 7.4.2)
vii) Remove the push on connectors to the water pressure switch, flow overheat thermostat, flow high limit thermostat and flue protection thermostat taking note of the correct positions.
viii) Remove the condensate trap (Section 7.10)
ix) Remove the pressure gauge phial located next to the drain off tap.
x) Disconnect the flow to the heat exchanger at the union on the heat exchanger flow manifold.
xi) Undo the nut and olive of the isolating valve fitted directly on the heat exchanger return pipe.
xii) Remove the nut fixing the strap retaining the base of the heat exchanger and pull out the strap by unhooking it from its fixing behind the heat exchanger.
xiii) Remove the allen screw securing the top of the heat exchanger to its mounting bracket.
xiv) Remove the heat exchanger assembly by pulling forward at the top and lifting up and out of the appliance.
xv) Cut the olive from the heat exchanger return pipe and remove the compression nut.
xx) Reassemble (Section 7.3)
xxi) Recommission (Section 4 - Commissioning)

7.9 CONDENSATE TRAP (Fig. 5.7.2 item 90)

i) Isolate the appliance (Section 7.1)
ii) Gain access (Section 7.2)
iii) Disconnect the condensate line from the base of the heat exchanger.
iv) Disconnect the condensate line from the base of the flue assembly.
v) Disconnect the condense lines from the projection of the condensate trap from the base of the cabinet.
vi) Withdraw the condensate trap.
vii) Mop up any spilled condensate.
viii) Reassemble (Section 7.3)

NB: When re-fitting the condensate trap pour water onto the condensate hose from the base of the heat exchanger until nearly full. Then reconnect the condensate hose to the base of the heat exchanger.

7.11 PRESSURE GAUGE (Fig. 5.7.4 item 211)

i) Isolate the appliance (Section 7.1)
ii) Gain access (Section 7.2)
iii) Shut off the pressure measurement point at the return drain valve located at the base of the heat exchanger.
iv) Remove the phial from its mounting at the return pipe entry to the base of the heat exchanger.
v) Press in the catches and push the pressure gauge forward through the control panel.
vi) Reassemble (Section 7.3)
vii) Refill the system (See Section 4 - Commissioning)

7.12 MODULE SIGHT GLASS (Fig. 5.7.2 item 71)

i) Isolate the appliance (Section 7.1)
ii) Gain access (Section 7.2)
iii) Unscrew the sight glass fitting from the burner head.
iv) Reassemble (Section 7.3)

7.13 MODULE HT IGNITION LEAD (Fig 5.7.4 item 185)

i) Isolate the appliance (Section 7.1)
ii) Gain access (Section 7.2)
iii) Remove the lead from the electrode and the ignition control box.
iv) Reassemble (Section 7.3)

7.14 MODULE AIR ORIFICE (Fig. 5.7.3 item 163)

i) Isolate the appliance (Section 7.1)
ii) Gain access (Section 7.2)
iii) Disconnect the flexible air intake hose from the air/gas manifold (Fig 5.7.3 item 164)
iv) Unscrew the air orifice grub screw (Fig 5.7.3 item 140) to release the air orifice.
v) Lift the air orifice from its seat in the air inlet manifold.
vi) Reassemble (Section 7.3)

NB: When replacing the air orifice ensure that the new orifice is seated with the chamfer facing upwards.

8. SHORT SPARE PARTS LIST

Item	GC No	Part Denomination	Item	GC No	Part Denomination
74	-	Burner	73	114 118	Burner Manifold Gasket

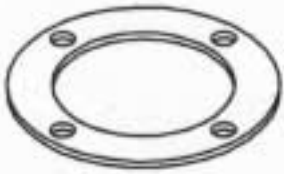

68	-	Ignitor/Sensor Probe	375 527	Ignitor Gasket	67 -

110	-	Flexible Hose Gasket	84	375 530	Boiler Thermostat

86	375 532	Flue Thermostat	97	375 533	Flow Overheat Thermostat

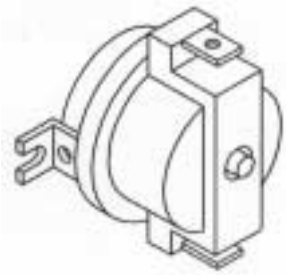

Item	GC No	Part Denomination
99	375 534	Flow High Limit Stat

Item	GC No	Part Denomination
142	375 535	Gas Valve Outlet Gasket
136	375 536	Gas Valve

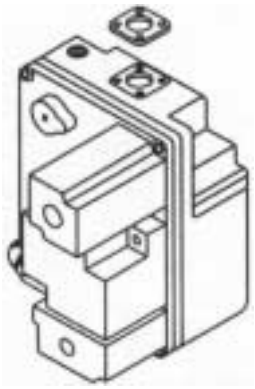

Item	GC No	Part Denomination
147	114 122	Flexible Hose Gasket

Item	GC No	Part Denomination
183	E01-074	Ignition Control Box

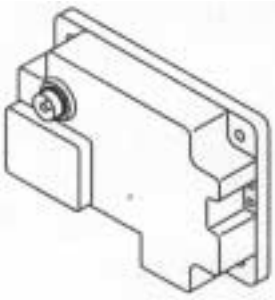

Item	GC No	Part Denomination
202	- -	Air Pressure Switch

Item	GC No	Part Denomination
185	E01-075	HT Ignition Cable

SHORT SPARE PARTS LIST FOR THE KESTON CONDENSING BOILER RANGE

Item	GC No	Part Denomination
74	-	Burner
	-	
73	114 118	Burner Manifold Gasket
68	375 527	Ignitor Gasket
67	-	Ignitor/Sensor Probe
	-	
147	114 122	Flexible Hose Gasket
84	375 530	Boiler Thermostat
86	375 532	Flue Thermostat
97	375 533	Flow Overheat Thermostat
99	375 534	Flow High Limit Thermostat
142	114 139	Gas Valve Gasket
136	375 536	Gas Multifunctional Control Valve
183	E01-074	Ignition Control Box
202	-	Air Pressure Switch
	-	
185	E01-075	HT Ignition Cable

KESTON CONDENSING BOILERS
IMPORTANT
KESTON 260 & 340
INSTALLATION KEY POINTS

- *Read Installation Manual Carefully*
- *Ensure that there is at least 9 feet head of water pressure at the top of the boiler.*
- *Ensure that the boiler(s) is connected to the system via a low loss balance header.*
- *DO NOT remove the dust caps from the air and exhaust pipes until ready to connect.*
- *Ensure that ALL dust particles, filings , plastic chips etc. are removed from the inlet pipe.*
- *If the installation is a replacement the system must be flushed clean. System should be drained hot, then refilled, then drained again until the water is clean.*
- *Ensure that there is a proper electrical supply ie 230V fused at 13A for the permanent live.*
- *Ensure that the external controls are configured to form a link between terminals 17 & 18 to enable boiler.*
- *Take great care with pipe connections to ensure that no damage is done to the internal pipework.*
- *Ensure that the 22mm condensate pipe is not exposed to freezing conditions.*
- *Make sure that the exhaust pipe terminates away from windows or vents and is out of reach.*
- *Make sure that the air inlet and exhaust pipe outlets are at least 500mm apart.*
- *Check tightness of all connections in the boiler before firing.*
- *Ensure that the terminals supplied are fitted to both the exhaust and air inlet pipes.*
- *The system must be free from air before firing.*
- *Gravity circuits are not allowed.*