KESTON

Qudos 28s

Fan Powered High Efficiency Modulating Domestic Condensing Gas System Boiler

User, Installation and Servicing Instructions

CE/PI No : 87BR36
Qudos 28s - GC No : 41-930-17
Qudos 28sP - GC No : 41-930-18

ISSUE: 3/2010

KESTON Boilers

CE

These instructions must be left either with the user or next to the site gas meter.

34 West Common Road
Hayes, Bromley, Kent BR2 7BX
Tel. +44 (0)20 8462 0262 Fax. +44 (0)20 8462 4459
email : info@keston.co.uk web : www.keston.co.uk

COMPLIANT WITH BUILDING REGULATION PART L1 & L2
SEDBUK A RATED

benchmark

CONTENTS

NB : These instructions are an integral part of the appliance. This document must be handed over to the user on completion of the installation to ensure compliance with the Gas Safety (Installation & Use) Regulations.

Section	Description
0	HANDLING INSTRUCTIONS
0.1	List of contents
0.2	Recommended handling procedure
1	USER INSTRUCTIONS
1.1	Introduction
1.2	Maintenance
1.3	Boiler Setup and Operation
1.4	Safety Information
2	GENERAL INSTRUCTION
2.1	Description
2.2	Boiler Schematic
2.3	Related Documents
2.4	Physical Data
2.5	Optional Accessories
2.6	Performance Data
3	BOILER LOCATION
3.1	Dimensions & Minimum Clearances
3.2	Service Connections
3.3	Position
3.4	Electrical
3.5	Boiler Size Selection
3.6	Gas Supply
3.7	Water Systems
3.8	Flue System
3.9	Air Supply
3.10	Compartment Installation
3.11	Condensate Drainage
4	INSTALLATION OF THE BOILER
4.1	Wall Mounting Bracket
4.2	Mounting The Boiler
4.3	Assembly Practice
4.4	Installing Flue And Air Pipes
4.5	Condensate Drainage
4.6	Water System
4.7	Gas Supply
4.8	Electrical Supply
4.9	Exchanging A Boiler
5	COMMISSIONING OF THE BOILER
5.1	Initial Flushing
5.2	Gas Supply
5.3	Electrical Installation
5.4	LP Gas
5.5	Initial Firing

5.6 Hot Flushing
5.7 Combustion Testing
5.8 Checking the Gas Pressure
5.9 Timing The Gas Meter
5.10 Handing Over To The User

6 FAULT FINDING
6.1 Electrical Control Sequence
6.2 Normal Operation
6.3 Fault Modes
6.4 Functional Flow Wiring Diagram
6.5 Electrical Wiring Diagram
6.6 Illustrated Wiring Diagram
6.7 Exploded Assembly Diagrams

7 SERVICING
7.1 Pre Service Checks
7.2 Recommended Routine Service

8 REPLACEMENT OF PARTS
8.0 General
8.1 Precautions
8.2 Access
8.3 Replacement Procedure
8.4 Electrical Components
8.5 Spark Ignition/Flame Detection Electrode
8.6 Burner
8.7 Heat Exchanger
8.8 Condensate Trap
8.9 Pump
8.10 Expansion Vessel

9 SPARE PARTS LISTINGS

10 GAS BOILER COMMISSIONING CHECKLIST

0. HANDLING INSTRUCTIONS

0.1 LIST OF CONTENTS

The Keston Qudos 28s and Qudos 28sP are supplied almost totally pre-assembled. The units use standard 50 mm muPVC (BS5255 and/or BSEN1566-1 and BSEN1329) pipe for the flue and air intake systems. The boiler is packed in a single box without additional flue kit. All additional components are packed inside the boiler cabinet itself. The following is a list of components and their location in the boiler cabinet

Equipment List

Item	Quantity	Location
Wall Bracket Rawl Plugs	6	Inside accessories bag
Wall Bracket Wall Fixing Screws	6	Inside accessories bag
Wall Mounting Bracket	1	Secured to inside right hand side of boiler case
Wall Mounting Bracket Nuts	1	Inside accessories bag.
Wall Mounting Bracket Washers	1+1	Inside accessories bag
Wall Bracket Bolt Insulation	1	Inside accessories bag
50 mm muPVC Air/Flue Terminals	2	Inside accessories bag
Air Inlet Spigot (50 mm)	1	Inside accessories bag
Flue Outlet Spigot (50 mm)	1	Inside accessories bag
Air Inlet Spigot Gasket	1	Inside accessories bag
Air Inlet Spigot + Flue Outlet Spigot M6 Screws	4+2	Inside accessories bag
Cabinet Cable Entry Clamps	2	Inside accessories bag
Gas Isolating Cock	1	Inside accessories bag
Condensate Trap	1	Inside accessories bag
Condensate Trap fixing screws	2	Inside accessories bag
Condensate Trap fixing washers	2	Inside accessories bag
Condensate Trap Gasket	1	Inside accessories bag
Outside Temperature Sensor	1	Inside accessories bag
50 mm muPVC Pipe	2	Inside boiler case
50 mm muPVC Elbow	2	Inside boiler case

Document List

Item	Quantity	Location
Registration of Purchase	1	In A4 envelope
Installation Template	1	In document bag

Remove the cabinet shell by removing the two retaining screws in the top of the cabinet and the two retaining screws in the bottom of the cabinet.

0.2 RECOMMENDED HANDLING PROCEDURE

NB : The following lift operation exceeds the recommended weight for a one-man lift as specified in the Manual Handling Operations 1992 Regulations.

For the carriage of carton it is recommended at least two people perform any lift. Clear the carriage route of the carton from point of delivery to point of installation. Take care to avoid trip hazards, slippery or wet surfaces and when climbing steps and stairs. Always use assistance if required. If a sack truck is used it is recommended the carton is strapped to the truck.

For the unpacking of the appliance from the carton, it is recommended at least two people perform any lift. It is recommended to cut the base end of carton and open the carton flaps. Ensure the protective packing over the boiler tappings at the base of the boiler is kept in place, then tilt the boiler forwards from its back onto its base and remove carton by sliding up over the boiler. When lifting this appliance the back should be kept straight at all times. Avoid

twisting at the waist - reposition the feet instead. Avoid upper body bending when holding the appliance and keep the boiler as close to the body as possible.

Before hanging the appliance on the wall it is best to store the appliance laid on its back with the casing on. When ready to hang the boiler on the wall remove the casing and place to one side. At this stage it is assumed that the wall bracket is correctly positioned and secured on the wall face.

a) Have the wall bracket nut and washers to hand so that they can be accessed whilst holding the boiler in position on its mounting bracket.
b) The boiler has a dry weight of 43 kg (95 lbs) and will therefore require at least two people to lift without the use of lifting aids - ensure co-ordinated movements during lift. Always use assistance if required.
c) Lift the boiler by gripping at the four corners of the boiler back plate. When lifting this appliance the back should be kept straight at all times. Avoid twisting at the waist - reposition the feet instead. Avoid upper body bending when holding the appliance and keep the boiler as close to the body as possible.
d) Lift the boiler and locate onto the stud and the two pegs of the wall mounting bracket.
e) Place the wall mounting bracket washers over the bracket stud protruding through the back plate of the boiler.
f) Secure the boiler onto the wall bracket by fixing the wall mounting bracket nut onto the wall bracket stud. This must be tightened well.

Safety footwear and gloves are recommended PPE when lifting this appliance - to protect against sharp edges and ensure good grip.

The Qudos 28s and Qudos 28sP boilers can be fitted in compartments with very small clearances required around the appliance (refer to Section 3.1). Due consideration should therefore be given to access within the compartment for lifting and positioning.

1. USER INSTRUCTIONS

1.1 INTRODUCTION

Thank you for choosing this Keston Qudos 28s for your household heating. The boiler is designed to be very straightforward to operate and has no user serviceable parts inside the cabinet. The following instructions are to provide you with information on the operation and maintenance of your Qudos 28s and what to do in the unlikely event of a fault.

These user instructions should be read carefully to ensure safe and economical use of your Qudos 28s or Qudos 28sP. The Qudos 28s model is for use with natural gas only, the Qudos 28sP model is for use with LPG only.

1.2 MAINTENANCE

Servicing

To ensure continual safe and efficient operation and to maintain product warranties it is a requirement that the appliance is checked and serviced at least once per year. It is the law that any servicing must be carried out by a competent person. **Removal of the appliance cabinet by anyone other than a competent person will automatically invalidate the appliance warranty.**

Clearances

If fixtures are to be positioned close to the boiler, the following minimum clearances must be observed: Top 150mm, Left 5mm, Right 5mm, Base 200mm, Front 10mm. Extended clearance is required to the front for servicing (300mm).

Cleaning

Normal case cleaning only requires dusting with a dry cloth. To remove more stubborn marks wipe with a damp cloth and finish with a dry cloth.

1.3 BOILER SETUP & OPERATION

Check that the gas supply from the gas meter is turned on. Switch on the electrical supply to the boiler. The display will now run through a self check procedure. Set any controls to call for heat.

To light the boiler

The Qudos 28s features two temperature controls to allow different settings depending on the source of the demand, i.e. heating or hot water. Identify which setting is demanded. Using the "▼" on the left of the display, select the setpoint you wish to adjust, generally the one indicated by a radiator symbol with a "1" to the left. Set the required temperature using the "+" or "-" buttons associated with the heating zones or hot water temperature. After the selection of the desired temperatures press ENTER and then preset "RESET" to return to the normal display.
If the actual temperature is less than the desired temperature the boiler will fire and, after a few seconds, a "flame" will appear on the display to show that the boiler is alight.
NB: Where the demand is via 0-10VDC or Opentherm the boiler setpoint is set using the external controller in use.

Normal Operation

During normal operation the digital display will show the current boiler temperature and will show relevant operational symbols to confirm what action the boiler is taking. If the "radiator", or "⊥" symbol is shown on the display the boiler is receiving a demand for that function.

Fault Modes

In the event that the boiler detects a situation which it considers to be a fault the display will change to show a flashing fault code starting with an “E” and then a two digit number. The table below explains these codes and the action you should take.

Display	Description of fault
E02	Ignition lockout - the boiler has attempted to light five times and not succeeded - check the gas supply is on.
E04	Flame failure whilst running - the boiler is having difficulty maintaining the flame. Consult your Service Engineer and check for flue, gas supply or condensate drainage obstruction
E12	Flow overheat - the boiler has exceeded it maximum water temperature. Check that any by-pass is open and the controls are operating correctly
E26 or E67	The system water pressure is too low. Check the system has water in and, for sealed systems, top up the system water pressure to restore a pressure of between 1 and 2 bar. (Consult your installer for instruction how to top up water pressure - repeated need for restoration of water pressure indicates a system leak which should be investigated)
E25	The boiler temperature is rising too fast - ask your Service Engineer to check for system blockage or pump failure.
E52	The flue temperature is too high. Consult your Service Engineer - SERVICE RESET REQUIRED
E62	Water pressure too high - check that the system water pressure top-up valve has not been left open or consult your installer to check the expansion vessel.
E70	The cabinet has overheated - consult your Service Engineer before operating the boiler further - SERVICE RESET REQUIRED

The above is an abbreviated list of possible error codes. If the code is not in the list above consult a GAS SAFE REGISTER registered engineer. A full list of codes can be found in Chapter 6 of this manual. If a code appears and you feel the original cause has been rectified and it has not been designated as requiring a “Service Reset”, press the “Reset” button to resume boiler operation. Otherwise, or if the code persists consult a GAS SAFE REGISTER registered engineer.

Raise up the system pressure until error E67 or E26 disappears from display (the boiler will enter in standby mode or will start to fire up if a heat demand exists). To check the system pressure press the “▼” button repeatedly until the display shows the water pressure, indicated by the word “bar” to the right of the number. To return to main screen press the RESET button.

Precautions

Care must be taken at all times to ensure that no blockage or obstruction is present in the condensate drainage line. In addition, the air intake and flue exhaust terminals must be free from obstruction at all times.

Care should be taken not to damage the condensate trap protruding from the base of the boiler. Any sign of leakage of this part should be reported to a GAS SAFE REGISTER registered engineer immediately. If the part becomes broken the boiler should be turned off and a GAS SAFE REGISTER registered engineer contacted to make a repair.

Any indication of leakage from the boiler cabinet should be investigates by a GAS SAFE REGISTER engineer.

Frost Protection

The Qudos 28s has an integral frost protection function. However, care should also be taken that any exposed pipework is adequately insulated to prevent freezing.

1.4 SAFETY INFORMATION

IF YOU SUSPECT A GAS LEAK TURN OFF THE APPLIANCE IMMEDIATELY, TURN OFF THE GAS TAP TO THE APPLIANCE (LOCATED UNDERNEATH) AND CONTACT YOUR GAS SUPPLIER WITHOUT DELAY.

Benchmark Initiative

As part of the industry wide "Benchmark" initiative Qudos 28 boiler manual includes **Gas Boiler Commissioning Checklist (Chapter 10)**. This form should be completed by your installer at the end of the installation and commissioning process. The details of the Checklist will be required in the event of any warranty work being required. There is also **Service Interval Record (Chapter 10)** to be completed after each annual service visit.

These forms (Chapter 10) should be kept in a safe place for the life of the boiler.

The boiler should be installed and serviced only by GAS SAFE REGISTER registered operatives. All GAS SAFE REGISTER registered Installers carry a GAS SAFE REGISTER ID card and have a registration number. **Both should be recorded in your boiler manual (Chapter 10: GAS BOILER COMMISSIONING CHECKLIST).** You can check your installer by calling GAS SAFE REGISTER direct on 0800 408 5500.

IMPORTANT

This appliance is not intended for use by persons (including children) with reduced physical, sensory or mental capabilities, or lack of experience and knowledge, unless they have been given supervision or instruction concerning use of the appliance by a person responsible for their safety.

Children should be supervised to ensure that they do not play with the appliance.

2. GENERAL INSTRUCTION

2.1 DESCRIPTION

The KESTON Qudos 28s and Qudos 28sP boilers utilize the latest in condensing technology to produce a high efficiency boiler with SEDBUK A rated efficiency plus advance controls to maximize operational efficiency.

The Qudos 28s is unique in concept and design. It comprises a high efficiency stainless steel heat exchanger coupled with a low emissions burner to deliver ultra high efficiency condensing mode operation within a compact wall hung cabinet. The unit automatically adjusts gas and air rate according to demand to give a heating input in the range of 7.8kW to 29.4kW (GCV). The integral pump assembly, in the Qudos 28s, is automatically speed controlled to best match water flow rate to heat output & further increase appliance efficiency.

The Qudos 28s has been developed to embrace the concept of advanced controls to ensure the ultra high performance burner and heat exchanger system is run to optimum performance levels whilst provided or exceeding the comfort levels demanded. As a result the boilers feature a host of additional connections for:

- an optional outside sensor to enable the boilers inbuilt weather compensation option which delivers enhanced user comfort levels with peak operating efficiency due to the lower flow temperatures involved.
- an optional “Opentherm” connection point for the Keston Room Control module which provides further advanced user control for room temperature compensation and optimum start.
- optional 0-10VDC input where temperature control is provided by external 3rd party intelligent controls
- optional connection of a DHW thermistor to enable modulated reheat of DHW and optional legionella prevention function

Further, the Qudos 28s is developed with the concept that the gas boiler in the modern home is often supplemented by alternative or renewable energy sources. As a result the Qudos 28s features:

- optional connection of a solar thermal system, pump, panel and DHW sensor, for direct control of solar thermal system from the boiler. Other additional energy source systems, such as Ground Source Heat Pump, will be accommodated soon.

The boilers have the added advantage of very high efficiency, and small diameter muPVC plastic flue which can be extended up to 20 metres horizontally or vertically. The boilers also feature an optional remove fascia panel so the boiler can be controlled from within the house where the boiler is located outside the house or in the loft.

The Keston Qudos 28s uses a variable speed combustion blower to deliver a premix of gas and air to a downward firing burner in a high efficiency, single pass heat exchanger. The flue system is room sealed and fan powered. The ignition is direct spark and fully automatic. The boiler housing is **not** waterproof and should be installed in a position where it will always be dry. Combustion air is drawn from the cabinet which is connected to outside atmosphere via a small diameter plastic intake pipe. The cabinet therefore remains under negative pressure at all times the boiler is operating.

These boilers are designed for use as part of a sealed water central heating system with fully pumped circulation. The pump, an 8l expansion vessel and associated safety devices are all fitted within the Qudos 28s boiler. However, consideration should be given to additional expansion vessels on larger systems where 8 litres may be inadequate.

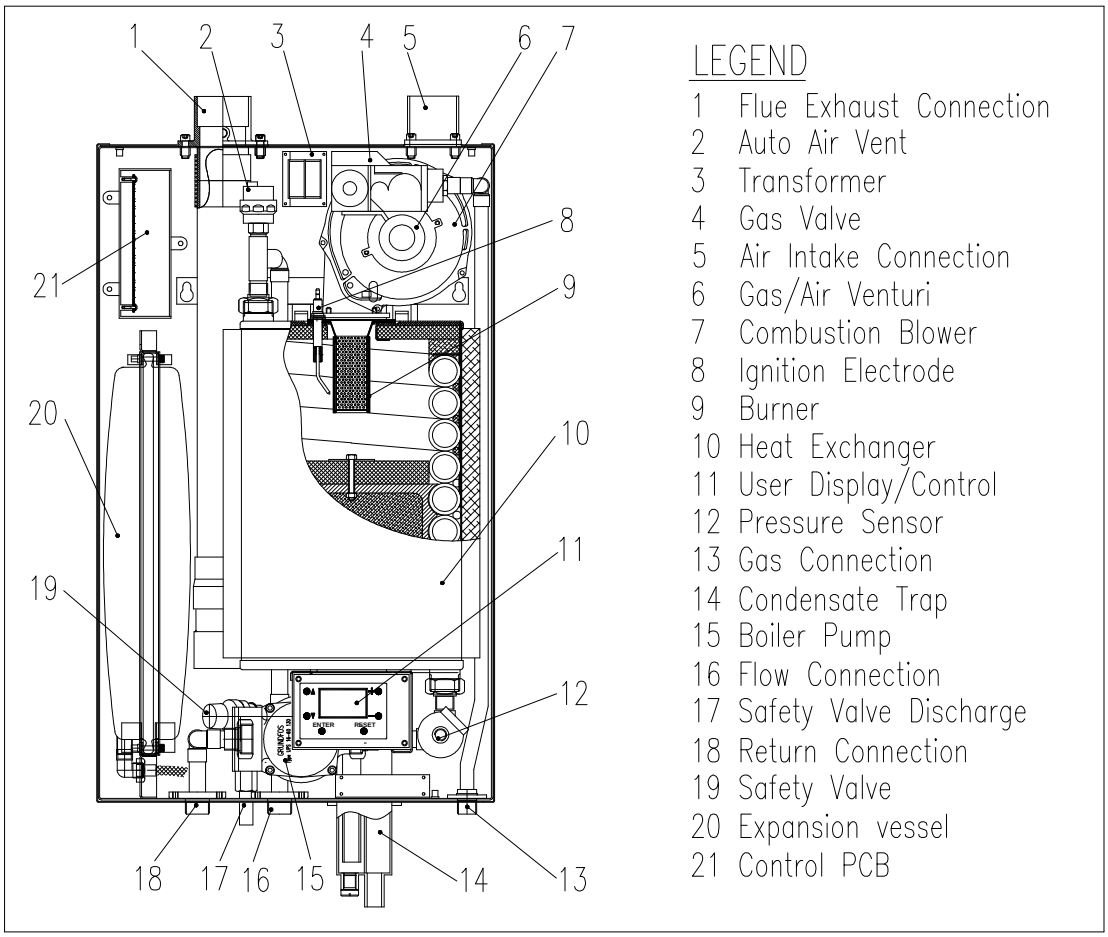

The boiler heat exchanger is made from highly corrosion resistant stainless steel in corrugated pipe form which provides massive surface area within a compact dimension. The hot combustion gases from the down firing burner pass around the stainless steel pipes imparting heat into the system water. On the Qudos 28s integral variable speed pump within the appliance cabinet ensures the heat exchanger receives correct water flow when firing. The Qudos 28s is not a high water content boiler and does not contain the metal mass, or water volume, of a cast iron or steel boiler. This boiler is of low mass and low water content and therefore responds faster when there is a call for heat. The Qudos 28 features full user diagnostics, integral frost protection function, automatic pump and fan exercise in periods of inactivity, anti cycle control and dry fire protection.

2.2 BOILER SCHEMATIC

Air is drawn into the boiler through a 50 mm muPVC (BS5255 and/or BSEN1566-1 and BSEN1329) plastic pipe or, alternatively, via a 75mm Keston composite plastic pipe. Gas is mixed with combustion air at the inlet to the fan. The gas flow is automatically regulated by the gas valve according to the air flow generated by the fan. The gas and air are thoroughly mixed in the blower and fed into the burner located at the top end of the heat exchanger module. The gas and air mixture is ignited by a direct spark ignition control system and burns with a blue flame just off the surface of the burner. As the hot products of combustion pass downwards, they are cooled by exchanging heat with the circulating water which enters the heat exchanger at the bottom of the heat exchanger. The optimum heat input is detected by monitoring flow and return temperatures and is adjusted by controlling the speed of the fan. The optimum pump speed is also detected and automatically selected by the boiler.

When the return water temperature is below 55°C, part of the water vapour in the combustion products will condense inside the heat exchanger, thus increasing the boiler efficiency further by releasing the latent heat of condensation. This condensate falls to the

bottom of the heat exchanger where it is separated from the flue gases and exits from the boiler through the condensate drain. Any condensate formed in the flue runs back down the flueway and is drained at the base of the flue connection to the heat exchanger or drain points within the flue.

The condensate is very slightly acidic (about the same acidity as vinegar) and should be piped in a plastic pipe. It is not harmful to the waste disposal system and may be disposed of as normal waste water.

The flue gases are piped in a 50 mm muPVC (BS5255 and/or and BSEN1329) plastic or, alternatively, 75mm Keston composite plastic pipe to outside. The temperature of the flue gases are usually around 5°C to 10°C above the temperature of the return water. The flue pipe should be terminated outside the building from where they cannot re-enter the building or any other adjacent building. It should also be terminated such that flue products cannot be drawn into the boiler air intake terminal.

The heating level may be controlled by room thermostats, programmer time clocks and compatible energy management systems. An optional Keston room controller can be connected which will provide enhanced controls such as room compensation to further increase efficiency and comfort levels. However, this is only recommended for heating only applications. Once the controls are set the boiler operates automatically. Further, a Keston outside sensor can be connected to the boiler which will automatically invoke weather compensated heating which further boosts user comfort and boiler efficiency.

In the event of the boiler overheating the safety devices will cause a safety shutdown. A safety discharge valve and discharge pipe is fitted to the boiler.

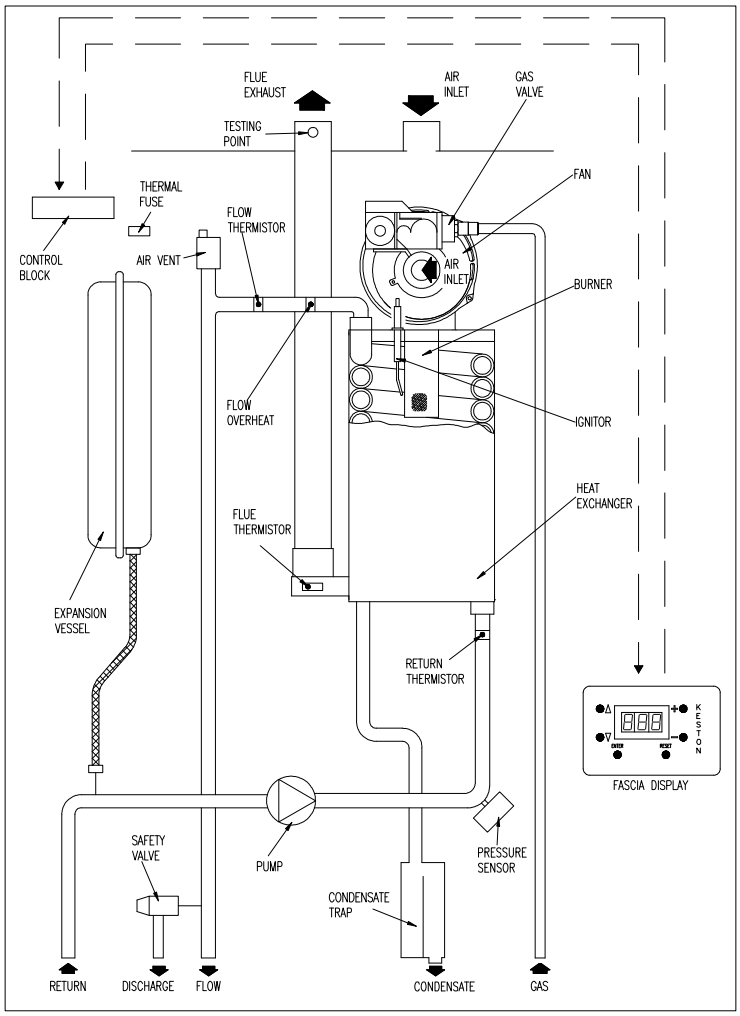

The Qudos 28s features an integral frost protection function which will operate the pump, regardless of the external controls, should the boiler temperature fall below 10°C. In the event the boiler temperature falls below 5°C the boiler will also fire. This is to avoid damage to the boiler through freezing of boiler water. The boiler will turn off when the flow temperature exceeds 15°C.

The Qudos 28s features an integral pump exercise function which will run the pump, without

firing the boiler, for 10 seconds in the event the boiler is on standby for in excess of 24 hours without firing. This is to help prevent seizing of the pump due to long periods of inactivity.

2.3 RELATED DOCUMENTS

The Keston Qudos 28s and Qudos 28sP Condensing Boilers must be installed in accordance with the current issue of the *Gas Safety (Installation and Use) Regulations 1996*, current *IEE Wiring Regulations*, *Building Regulations*, *Building Standards (Scotland) Consolidation*, and the *Bye Laws of the local Water Undertaking*. It is the law that ALL gas appliances are installed by a competent person in accordance with the above regulations.

In addition, due account must be taken to the following Codes Of Practice:

BS 6891	:	*Gas Supplies*
BS 6798	:	*Installation Central Heating Boilers*
BS 5449	:	*Installation Pumped Central Heating*
BS 5546	:	*Installation Domestic Hot Water*
BS 5440.1	:	*Flues*
BS 5440.2	:	*Air Supply*
BS 5482.1	:	*Domestic Propane and Butane Burning Installations*
BS 7074.1	:	*Expansion Vessels*
BS 7593	:	*Treatment of Water in Hot Water Central Heating Systems*
BS 7671	:	*Requirements for Electrical Installations. IEE Wiring Regulations 16th Edition.*

For Timber Framed Buildings, British Gas Publications DM2. Also *British Gas Publications 'Guidance Notes For The Installation Of Domestic Gas Condensing Boilers'* and *'Specification For Domestic Wet Central Heating Systems'.*

In IE, the installation must be carried out by a competent person and installed in accordance with the current edition of IS813 “Domestic Gas Installations”, the current Building Regulation and reference should be made to the current ETC1 rules for electrical installations.

No alterations should be made to the boiler without written permission from Keston Boilers Ltd. Any unauthorised modification will invalidate the warranty and may affect the safe and efficient operation of the boiler.

2.4 PHYSICAL DATA - Qudos 28s & Qudos 28sP

Cabinet Height	mm	700
Cabinet Width	mm	435
Cabinet Depth	mm	280
Top Clearance	mm	150
Side Clearance	mm	5
Base Clearance	mm	200
Front Clearance (for servicing)	mm	300
Weight - Full	kg / (lbs)	47/(104)
Weight - Empty	kg / (lbs)	43/(95)
Flow and Return Connection		G3/4
Gas Connection		G1/2
Condensate Connection overflow		22mm plastic
Safety Valve Connection discharge		15mm copper
IP Rating		IP20 (IPX0)
Flue and Air Intake Material	50mm muPVC (BS5255 and/or BSEN1566-1 and BSEN1329)	
Flue Pipe Size (nominal bore)	mm / (in)	50 / (2)
Air Intake Pipe Size (nominal bore)	mm / (in)	50 / (2)
Max. Air Intake Length	m	39
Max. Flue Outlet Length	m	20
Max. Total Flue Outlet and Air Intake Length	m	40
Flue and Air Intake Material	75mm Keston Composite	
Flue Pipe Size (nominal bore)	mm / (in)	75 / (3)
Air Intake Pipe Size (nominal bore)	mm / (in)	75 / (3)
Max. Air Intake Length	m	117
Max. Flue Outlet Length	m	60
Max. Total Flue Outlet and Air Intake Length	m	120

2.5 OPTIONAL ACCESSORIES

A range of accessories are available from Keston Boilers Ltd to compliment an installation. Terminal wall sealing collars are available to make good the external all face whilst working from the inside of the building using 50mm muPVC (BS5255 and/or BSEN1566-1 and BSEN1329) pipe. Stand-off frames are available to leave a 50mm gap behind the boiler to allow routing of pipes behind the boiler.

Description	Part Number
Flue Terminal Wall Sealing Collar (50mm)	C.08.0.00.07.0
Air Terminal Wall Sealing Collar (50mm)	C.08.0.00.07.0
50/75mm Flue Adapter	C.17.2.00.60.0
Flue Outlet Terminal (75mm)	C.17.2.26.00.0
Air Inlet Terminal (75mm)	C.17.2.26.00.0
Stand Off Back Plate	Q.10S.0.01.00.0
Keston Chronotherm Room Controller	C.17.4.21.00.0
DHW Tank Sensor	Q.10S.0.04.00.0
Solar Sensors Kit (Panel sensor and 2 x DHW Tank Sensors)	Q.10S.0.05.00.0

2.6 PERFORMANCE DATA - Qudos 28s & Qudos 28sP

		Qudos 28s Nat. Gas (G20)	Qudos 28sP LPG (G31)
Min. Input (Gross CV)	kW/(Btu/h)	7.8/(26,600)	7.6/(26,000)
Max. Input (Gross CV)	kW/(Btu/h)	29.4/(100,300)	28.8/(98,300)
Max. Output To Water			
(80/60°C Flow/Return)	kW/(Btu/h)	26.4(90,500)	26.4/(90,500)
(50/30°C Flow/Return)	kW/(Btu/h)	28.4/(96,900)	28.4/(96,900)
Min. Output To Water			
(80/60°C Flow/Return)	kW/(Btu/h)	7.0/(24,900)	7.0/(24,900)
(50/30°C Flow/Return)	kW/(Btu/h)	7.8/(26,600)	7.6/(26,000)
Max. Burner Press.-Hot *(Factory Preset)*	mbar/(in w.g)	0/(0)	0/(0)
Max. Gas Cons. After 10 mins (DHW)	l/s / (Ft^3/hr)	0.76/(96.6)	0.35/(45.0)
Max. Operating Flow Temp.	°C	82	82
Max. Press. (Sealed System)	bar	2.50	2.50
Inlet Gas Pressure	mbar/(in w.g)	20.0 / (8.0)	37.0/(14.8)
Recommended Temp Diff.	°C	8 to 20	8 to 20
Electrical Supply		230V 50Hz	230V 50Hz
Power Consumption (Max)	W	150	150
Power Consumption (Standby)	W	7	7
Type of Gas		G20 Natural Gas	G31 LPG
Optimum Flue Gas CO_2 Level (at max CH rate, case on)		9.1	10.5
Expected CO/CO2 Ratio (at max CH rate, case on)		0.0007	0.001
Destination Countries		GB/IE	GB/IE
SEDBUK Efficiency		91.0	93.0
NOx Class		5	5
Safety Valve	bar / (lbf/sq in)	3 / (43.5)	3 / (43.5)
Expansion Vessel Capacity	litre	8	8
SEDBUK Rating		**A (91.1%)**	**A (92.9%)**
[NB: For larger systems an additional expansion vessel may be required]			
Expansion Vessel Charge Pressure	bar / (lbf/sq in)	1.0 / (14.5)	
Heating System Minimum Pressure	bar / (lbf/sq in)	0.6 / (8.7)	

Seasonal Efficiency (SEDBUK) = 91.1 (Qudos 28s) & 92.9 (Qudos 28sP)
This value is used in the UK Government's Standard Assessment Procedure (SAP) for energy rating of dwellings. The test data from which it has been calculated have been certified by Advantica Technologies Ltd

Keston Boilers Ltd declare that there are no substances harmful to health within the appliance or used during the production of the appliance.

The Qudos 28s is intended for domestic and commercial EMC environments and on a governed G20 meter supply.

The Qudos 28sP is intended for domestic and commercial EMC environments and on a governed G31 supply.

This boiler meets the requirements of SI 3083 The Boiler (Efficiency) Regulations and is therefore deemed to meet the requirements of Directive 92/42/EEC. The CE mark on the appliance shows compliance with Directives 90/396/EEC, 73/23/EEC and 89/336/EEC.

IMPORTANT
This product contains ceramic fibre boards, which although not regarded as a risk, contain ceramic fibre which may cause temporary irritation to eyes, skin and respiratory tract. The fibres are held in place by inorganic binders. Therefore as long as the boards are not

disturbed they will not be released. Since the boards are non-serviceable parts there should be no risk. Under no circumstances should the user interfere with any sealed parts. To ensure that the release of fibres from these RCF articles is kept to a minimum, during installation and servicing we recommend that you use a HEPA filtered vacuum to remove any dust accumulated in and around the appliance before and after working on the appliance. When replacing these articles we recommend that the replaced items are not broken up, but are sealed within heavy duty polythene bags, and clearly labelled as RCF waste. RCF waste is classed as a stable, non-reactive hazardous waste and may be disposed at a landfill licensed to accept such waste. Protective clothing is not required when handling these articles, but we recommend you follow the normal hygiene rules of not smoking, eating or drinking in the work area and always wash your hands before eating or drinking.

Benchmark Initiative

As part of the industry wide "Benchmark" initiative Qudos 28S boiler manual includes **Gas Boiler Commissioning Checklist (Chapter 10)**. This form should be completed by your installer at the end of the installation and commissioning process. The details of the Checklist will be required in the event of any warranty work being required. There is also **Service Interval Record (Chapter 10)** to be completed after each annual service visit.

These forms (Chapter 10) should be kept in a safe place for the life of the boiler.

The boiler should be installed and serviced only by GAS SAFE REGISTER registered operatives. All GAS SAFE REGISTER registered Installers carry a GAS SAFE REGISTER ID card and have a registration number. **Both should be recorded in your boiler manual (Chapter 10: GAS BOILER COMMISSIONING CHECKLIST).** You can check your installer by calling GAS SAFE REGISTER direct on 0800 408 5500.

IN THE EVENT OF A GAS LEAK

Turn off the gas isolation valve to the property immediately. Extinguish all naked flames or other sources of ignition. Do not operate electrical switches on or off. Open all doors and windows to ventilate the area.

3. BOILER LOCATION

All dimensions in mm.

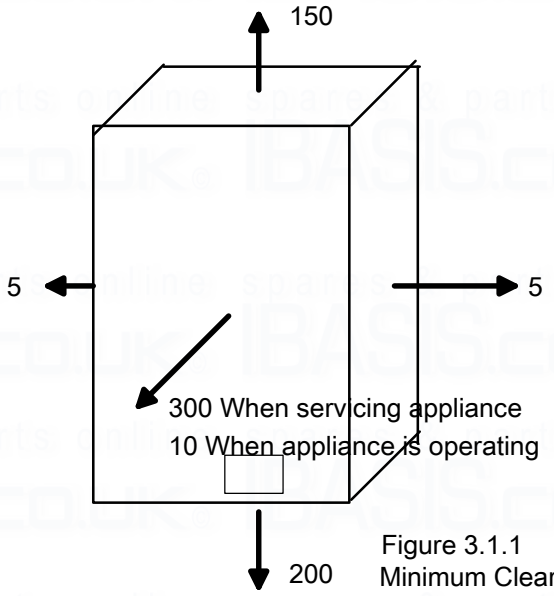

Figure 3.1.1
Minimum Clearances

3.1 DIMENSIONS AND MINIMUM CLEARANCES

The boiler must be installed in minimum clearances shown to allow subsequent servicing, and safe operation. However, larger clearances may be required during installation.

3.2 SERVICE CONNECTIONS

Gas, water, air and flue pipe, condensation, and electrical connections are as shown in the diagram below. Gas : 15mm compression. Flow/Return 0.75 inch BSP male, Gas 0.5 inch BSP male, PRV 15mm copper pipe and Condensate 21.3mm plastic pipe .

An optional stand-off frame (part number Q.28S.0.01.00.0) is also available which mounts behind the boiler to leave a 50mm deep space behind the boiler. This is to permit pipe routing behind the boiler if required. See Section 2.5 - Optional Accessories.

Figure 3.1.2
Dimensions

All dimensions

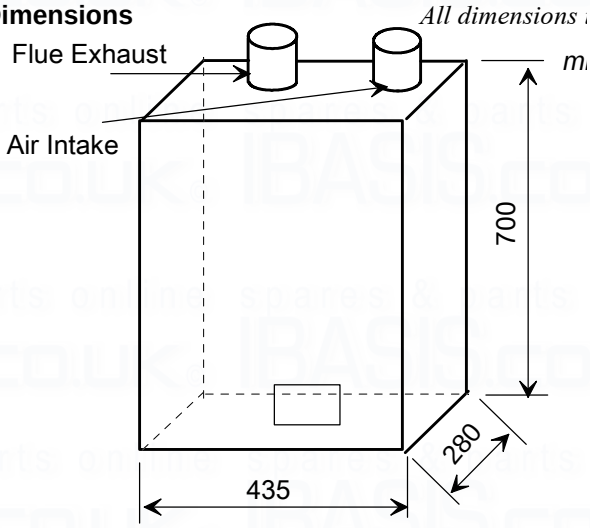

3.3 POSITION

The Qudos 28s and Qudos 28sP are not suitable for external installation. The boiler may be installed in any room or internal space, although particular attention is drawn to the requirements of the current IEE Wiring Regulations and, in Scotland, the electrical provisions of the Building Regulations applicable in Scotland, with respect to the installation of the boiler in a room or internal space containing a bath or shower.

Where a room-sealed appliance is installed in a room containing a bath or shower, any electrical switch or appliance control, utilising mains electricity, should be so situated that it cannot be touched by a person using the bath or shower. The Qudos 28S and Qudos 28SP are classified as IP20 (IPX0) and are therefore suitable for installation in Zone 3 areas, unless subject to hose down.

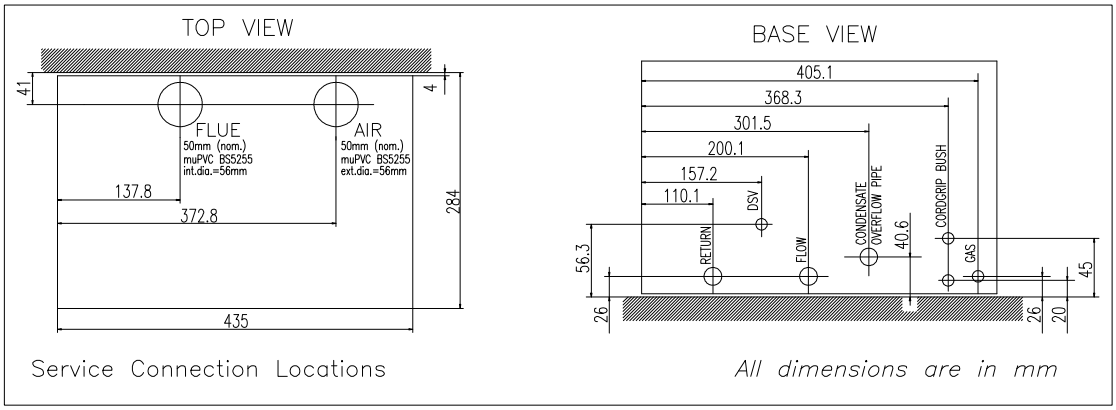

Compartment installation is permitted - such compartments must be constructed in accordance with BS 6798.
The wall on which the boiler is mounted must be of suitable load bearing capacity and must be non-combustible.
The Keston Qudos 28s can be located virtually anywhere desired provided that all regulations are complied with. Because of the boiler's compact size and venting flexibility, the installation is not limited to a boiler room setting. Before locating the boiler near a living space consider whether the sounds generated by the boiler will be objectionable. The boiler may be located within a cupboard enclosure to reduce noise levels if located within a living space. LPG boilers must not be installed in a cellar.

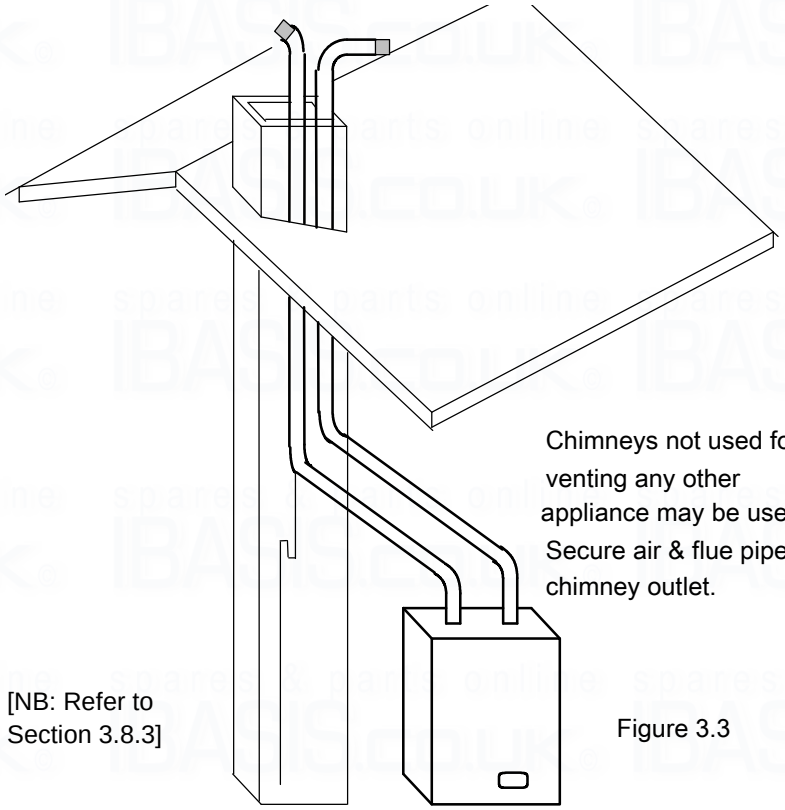

[NB: Refer to Section 3.8.3]

Figure 3.3

3.4 ELECTRICAL

3.4.1 Electrical Connections

The boiler must be connected to a permanent 230V ~ 50Hz supply, fused at 3A. **The boiler can be wired to a single switched live 230VAC signal input. However, the boiler has TWO thermostats, and will therefore accept up to TWO switched live 230VAC signal inputs, such as heating and hot water or radiators and underfloor heating zones. Alternatively, a Keston Room Controller can be connected directly, via two core low voltage cable, to the terminals marked "OT". The Keston Room Controller will then provide fully room compensated control to ensure the boiler output is matched to the rooms requirements at optimum boiler efficiency. This is only recommended for heating only applications. The boiler can also be driven by an external 0-10VDC input.**
Wiring external to the boiler must be in accordance with current I.E.E wiring regulations and local regulations.
The method of connection to the mains electricity supply **must** facilitate complete electrical isolation of the boiler, preferably by the use of a fused, unswitched three pin plug and a shuttered socket-outlet, both complying with the requirements of

BS 1363. There must be only one common method of isolation for the boiler and its control system.
The appliance must be connected to the 3A supply via a fused double-pole switch having at least 3 mm (1/8 inch) contact separation in both poles, serving only the boiler and the system controls.
The connection point to the mains supply should be readily accessible and adjacent to the boiler, except for rooms containing a bath or a shower. Refer to section 3.3 Position.

3.4.2 External Wiring & Controls

1. The boiler is designed so that **all** control wiring is external to the boiler.
2. Heating control signal inputs must be 230VAC "switched live" type unless using a Keston Room Controller (see below) or 0-10VDC input.

3.4.2.1 Enhanced Control Options

The Qudos 28s can be wired into a conventional heating installation using only permanent and switched live connections.

However, the Qudos 28s features a wide range of OPTIONAL control features normally associated with commercial boilers installations at additional cost. These are provided as standard in the Qudos 28s and require low costs sensors to be added to activate them. The features provided are detailed below. Refer to Chapter 4.8 for further wiring detail.

Room Compensation (Opentherm)
A Keston Room Controller may be used to provide room compensated control to ensure the boiler output is matched to the rooms requirements at optimum boiler efficiency. This is only recommended for heating only applications

Weather Compensation (Ext Sensor)
A Keston outside temperature sensor may be connected as an option. The boiler will automatically detect this connection and will operate on a "weather compensation" basis when receiving a heating demand signal from the SL terminal or from a Keston Room Controller. Screened cable (80% density) must be used to connect the outside temperature sensor.

Solar Control
Where a solar thermal system is in use, with a twin coil cylinder such as the Keston qSpa Twin, the Qudos 28s will control operation of the solar pump in conjunction with the boiler. The boiler requires connection to the solar tank sensor, solar panel sensor and solar pump

Modulating DHW Reheat
The Qudos 28s can provide direct modulation to maximise the re-heat performance of the DHW cylinder. A DHW cylinder sensor can be connected directly to the Qudos 28. A DHW demand input can also be provided to control DHW reheat activity, perhaps in conjunction with Solar Thermal. With this facility connected an automatic anti-legionnella facility can also be provided.

Analog Demand (0-10VDC)
Where external control panels are used, in boiler room applications, a 0-10VDC input can be connected to the boiler, in place of the SL1 switched live demand. The 0-10VDC signal will drive the first setpoint at 1VDC = 10C setpoint (NB: <0.5VDC is off, >8.0 VDC is 80C)

External Lockout Signal
Where remote monitoring and/or alarms are installed the boiler offers a volt-free lockout signal output. The boiler will provide a closed circuit across the two output points when the boiler is in lockout.

Remote Fascia Panel

For installations where the boiler is located outside of the living area, such as the loft or an out-house, a remote fascia control can be fitted within the living area. This will allow full functionality normally access via the boiler fascia panel.

3.5 BOILER SIZE SELECTION

The Qudos 28s will automatically adjust heat output and pump speed to match the system requirements at any given time. Efficiency and combustion levels are maintained at optimum levels throughout the possible output range. The Qudos 28s is therefore suitable for all systems with a total heat load within the maximum range of the boiler.

3.6 GAS SUPPLY

A gas meter should be connected to the service pipe by the local gas region or their contractor. An existing meter should be checked preferably by the gas region to ensure that the meter is adequate to deal with the rate of gas supply required. Installation pipes should be fitted in accordance with BS 6891.

Minimum/Maximum Gas Pressure:

Natural gas pressure before the gas valve must be maintained at between 18 mbar (7.2 in WG) and 22 mbar (8.8 in) while the boiler is running.

LPG pressure must be maintained between 31.5 mbar (12.4 in w.g) and 37.6 mbar (14.8 in w.g) while the boiler is running.

Gas pressures above or below these levels will lead to problems associated with the gas valve's internal pressure regulator.

Supply pipes to the boiler must not be sized less than the boiler inlet connection (15 mm). Due consideration must be given to the supply pressure to other gas appliances in the premises. Reduction in dynamic gas supply pressure will result in intermittent ignition failures. Ensure gas supply pipe work is adequately sized for the length of run from the meter to the boiler at a supply rate of 28.4kW (i.e. a natural gas supply should be considered to be a minimum of 22mm diameter, reducing to 15mm at the boiler. If gas runs greater than 12m, including the allowance for bends, are involved the pipe size should be increased further).

3.7 WATER SYSTEMS

All piping must be installed in accordance with all applicable local and Water Supply Bylaws for forced hot water heating systems.

Consideration must be given to pipe capabilities and pressure drop through the piping when selecting pipe sizes. The primary pipe connections to the boiler must be sized according to the system load, not dictated by the boiler connection sizes.

Water treatment must be carried out to BS 7593 : Treatment of Water in Hot Water Central Heating Systems.

In IE the requirements given in the current edition of IS813 and the current Building Regulations must be followed.

a The Keston Qudos 28s is designed for installation on sealed water systems only. With fully pumped water circulation. The pump, an 8l expansion vessel and associated safety devices are fitted within the boiler.

b Any system must be thoroughly flushed clean of grease, dirt and debris, prior to connection with the boiler. A trap may be installed in the flow line to collect any solder, or other debris, from the installation.

c All water systems must be constructed to comply with requirements of the Local Water Authority.

d Always use a system complying with the requirements of BS 5449 and BS 6798.

e System design must ensure an open circuit is always available to ensure circulation when the pump overrun function is operating after boiler shutdown.

f Isolation valves must be fitted on the flow and the return to enable isolation when maintaining the boiler.

g Copper tubing to BS 2871 Part 1 or barrier plastic pipe suitable to 110 °C, such as Unipipe, is recommended.

h Jointing should be either with capillary, threaded or compression fittings. Pipes should have a gradient to ensure air is passed easily to vent points and water flows readily to drain points.

i Draining taps must be located in accessible positions which permit the draining of the boiler. Draining taps should be at least 22 mm in nominal size and be in accordance with BS 2879.

AIR VENT POINTS

j These must be fitted at all high points where air will naturally collect and must be sited to allow complete draining of the system.

Table 3.7 Additional Expansion Vessel Selection

Safety Valve Setting	3.0 bar
Vessel charge & initial system pressure.	1.0 bar
Total Water Content of system in excess of 125 litres	**Vessel Volume**
25 litres	2.7
50 litres	5.4
75 litres	8.2
100 litres	10.9
125 litres	13.6

k. The boiler is supplied with an integral expansion vessel of 8l capacity. This is suitable for systems of up to 125 litres system volume. Table 3.7 Expansion Vessel Selection provides guidance for the correct additional expansion vessel size to use for systems with a water content larger than 125 litres. Any additional

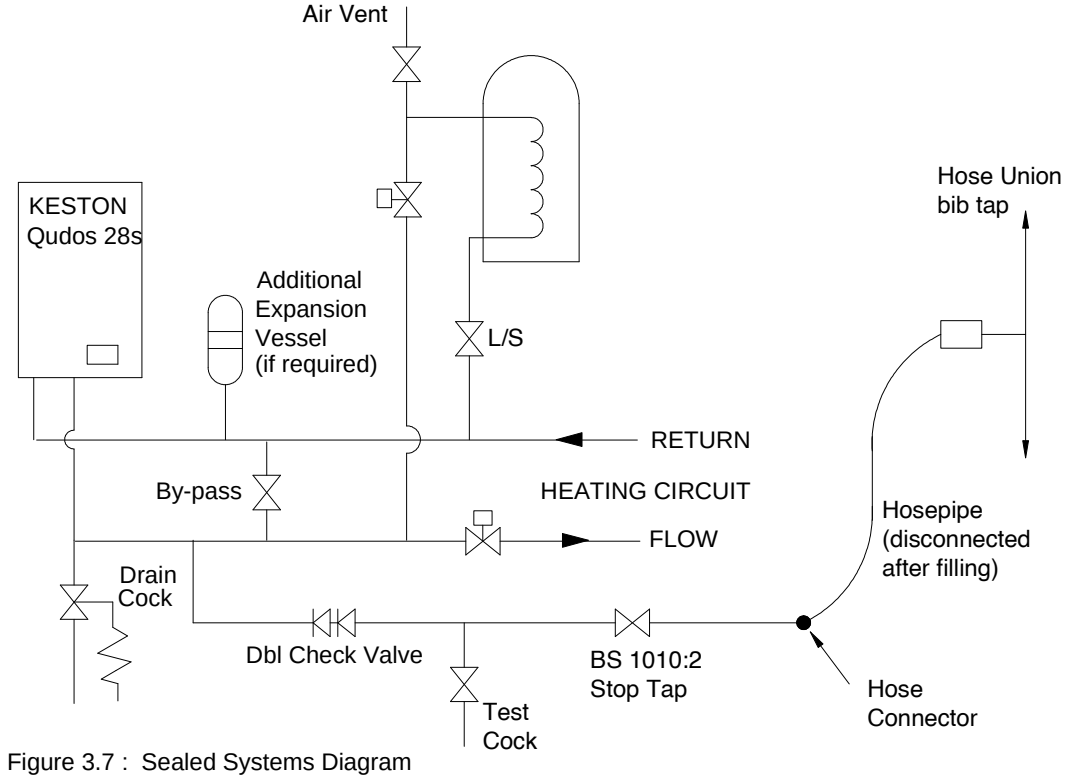

Figure 3.7 : Sealed Systems Diagram

vessel must be fitted on the boiler primary return.

l A filling point must be fitted, in accordance with local water authority requirements.

m The installation must be designed to work with flow temperatures of up to 110 °C. All components of the system must be suitable for a working pressure of 3 bar and a temperature of 110 °C. Care should be taken in making all connections that the risk of leakage is minimised.

n The pipe from the safety discharge valve must not discharge above an entrance, window or any type of public access area. The boiler safety discharge valve pipe must be extended using not less than 15mm pipe to discharge, in a visible position, outside the building, facing downwards, preferably over a drain. The pipe must have a continuous fall and be routed to a position so that any discharge of water, possibly boiling, or steam cannot create any danger to persons, damage to property or external electrical components or wiring. To ease future servicing it is advisable to use a compression type fitting to extend the safety discharge valve pipe.

3.7.1 Boiler By-pass Piping

Boiler water flows are critical to the operation of the boiler. If flow cannot be maintained through the system piping to meet the minimums required by the boiler, insufficient water flows through the boiler will cause the boiler to "kettle" or even produce steam which can damage the heat exchanger and will invalidate the heat exchanger warranty. In addition, an open circuit is required after boiler shutdown to permit circulation during the boilers 2 minute pump overrun sequence.

It is advisable to incorporate a boiler by-pass in the system, especially if thermostatic radiator valves are used. The flow/return differential should be 10ºC to 20ºC. **To comply with the Building Regulations Part L1 the bypass must of the automatic type.**

3.7.2 Air Elimination

In the initial charge of water to the boiler system and in all subsequent additions of water to the system some air will be dissolved in the water. As the water is heated the air is driven out of the solution and will collect in high spots in the system. **These air bubbles can interfere with pumping and heat transfer and must be eliminated.**

Installation of air bleed valves at the high spot(s) in the system will allow for air elimination when filling the system and will allow re-venting in a day or so after all air has been driven out of solution.

3.7.3 System Pump Selection (if required)

The Qudos 28s features an integral circulating pump which has sufficient excess head to drive most domestic systems. The available head is shown in the graph below. If the system index circuit resistance is in excess of the available head from the integral pump an additional system pump will be required.

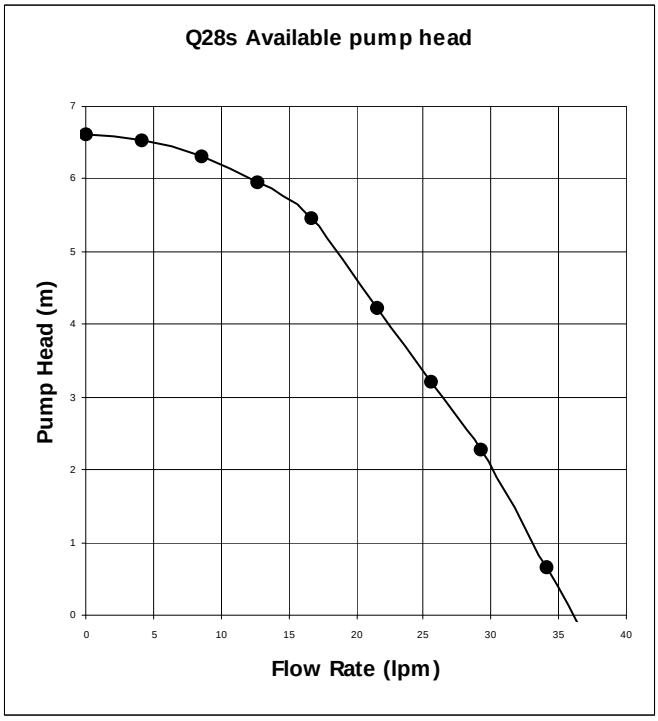

The schematic below illustrates a recommended approach to using an additional system pump. The additional system pump should be sized to overcome the index circuit resistance only as the boilers integral pump will overcome boiler resistance.

If an additional pump is required the selected pump must comply with BS 1394. Provision must be made in the system design for control of the additional pump. A connection point is available within the boiler to signal operation of the additional pump. However, this will need to drive the additional pump via a suitable relay.

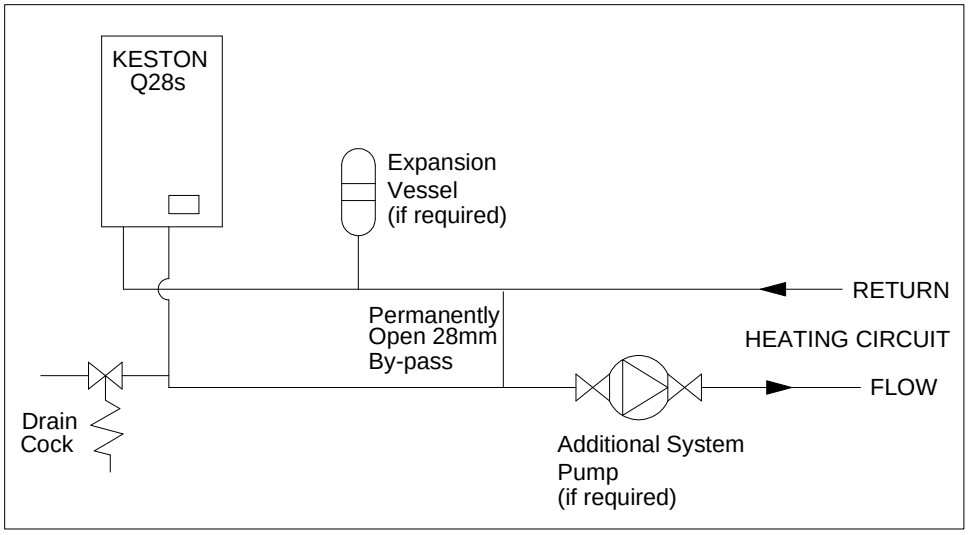

3.7.4 Hot Water System (if applicable)

The hot water storage vessel must be of the indirect type (certain direct cylinders can be used provided they are suitably adapted by fitting an immersion calorifier). DIRECT CYLINDERS MUST NOT BE USED. Further guidance is provided in BS 1394. It is advisable to fit a locksheild valve on the cylinder return to enable balancing of the flow rate through the cylinder.

The Keston Spa range of stainless steel unvented cylinders are an ideal option for use with the Keston range. The Keston qSpa range combine exceptional recovery times with durable, long life stainless steel construction and all associated controls. Contact Keston Boilers Ltd for information

The Qudos 28s also has advance control options built in which enable modulated reheat of DHW and anti-legionella function. Refer to Chapter 4 for more detail.

3.7.5 Filling The System

The system should be filled using a G24 approved filling loop. The system pressure should be set to between 1.0 and 2.0 bar. To display the system water pressure press the "▼" button repeatedly until the water pressure is displayed (indicated by the word "bar" to the right of the pressure reading). Fill the system and monitor the pressure displayed. When the pressure is set, press the "RESET" button until the normal display is resumed.

3.8 FLUE SYSTEM

NB: When installing a replacement boiler a new flue system must be used. Do not re-use the existing boiler flue installation.

3.8.1 Design

Individual air supply and flue outlet pipes are used. The material used for flue outlet &/or air inlet must be **muPVC** to BS 5255 and/or BSEN1566-1 and BSEN1329 of an internal diameter of 51 mm. (i.e. nominal 50 mm diameter muPVC solvent weld waste pipe)

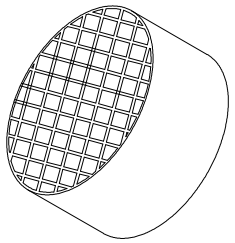

Flue Outlet/Air Inlet Terminals

Figure 3.8.1 : Terminals

Alternatively, where flue or air intake lengths of up to 60m are require, Keston Composite 75mm flue and

air pipe can be used (contact your Keston stockist for details). Keston Composite 75mm pipe MUST be painted where exposed to UV light.

Both 50mm flue outlet terminal and 50mm air inlet terminal are supplied and are illustrated in Figure 3.8.1. Both terminals are identical. If 75mm terminals are required these can be obtained from your Keston Boilers stockist. Request part numbers C.17.2.26.00.0 (terminals) and C.17.2.00.60.0 (50 to 75 adapters).

3.8.2 Maximum Lengths

The maximum lengths of both air inlet pipe and flue outlet pipe, when no bends are used, are as detailed below.

However, each bend used has an equivalent length that must be deducted from the maximum straight length stated above. Knuckle bends must not be used.

A 92.5° sweep elbow is equivalent to 1.0m straight length. A 45° bend is equivalent to 0.5m straight length.

	50mm	**75mm**
Maximum Air Inlet Length :	39.0m	117.0m
Maximum Flue Outlet Length:	20.0m	60m
Maximum Total Flue and Air Intake Length :	40.0m	120.0m

Example (assuming 50mm muPVC flue and air pipework)

Air inlet uses two one 92.5° sweep elbows. Hence, maximum length permissible (i.e. a+b in figure 3.8.2) = 39.0m - 1.0m - 1.0m = 37.0m

Flue outlet uses one 92.5° sweep elbow. Hence, maximum length permissible (i.e. c+d in figure 3.8.2 = 20.0m - 1.0 m = 19.0m

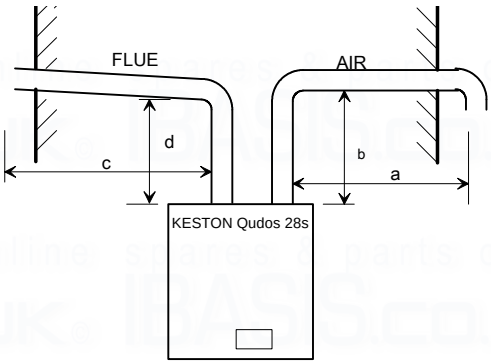

Figure 3.8.2 : Flue & Air Maximum Length Example

3.8.3 Slope

'Horizontal' flue outlet pipework MUST slope at least 2 degrees (35 mm per metre run) downwards towards the boiler. Pipework can be vertical. Only swept elbows can be used.

Air inlet pipework can be truly horizontal or vertical, or sloping in a downward direction towards the boiler but in this case rain, etc., must be prevented from entering the pipe. **There must be no troughs in any of the pipework, whether it be air inlet or flue outlet.**

Due the low temperature of the flue gases further condensate will form within the flue system. Drain points, with suitable traps, must therefore be incorporated within the flue system at the base of vertical flue sections in excess of 6m, for 50mm muPVC pipe flue systems. These additional condensate drains must be run to discharge as detailed in section 3.11. Such drain points can be formed using standard muPVC fittings. Refer to the example in Figure 3.8.3.

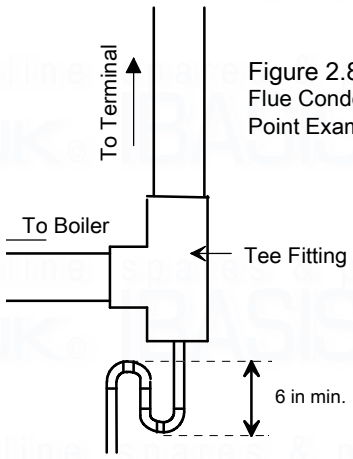

Figure 2.8.3 : Flue Condensate Drain Point Example

3.8.4 Terminations

Air inlet terminals must be facing horizontally or downwards to prevent entry of rain into the terminal and positioned to ensure only fresh air is drawn into the boiler. The air terminal must be located outside of the building.

Flue and air terminals must be positioned so that flue products are not drawn into the air inlet. Site specific wind conditions should be considered to achieve this.

Drawing of combustion air directly from a ventilated boiler room invalidates the heat exchanger warranty.

The flue outlet terminal is designed to face outwards but can, if desired, be adapted to face in any direction BUT must not be directed in the region of the air inlet. The flue terminal and air inlet terminal can be located on different, but not opposing wall faces.

The two terminals are subject to the requirements of BS 5440 Pt 1 for clearances from features of the building although some can be decreased to the values indicated.

The Keston Qudos 28s and Qudos 28sP, as with any condensing boiler, will generate a condensate "plume" from the flue terminal in all weather conditions. Consideration must therefore be given to the effect of this "plume" when selecting a location for the flue terminal. It is the responsibility of the installer to ensure the selected terminal location does not cause nuisance.

Dimensions (mm)	Flue Terminal	Air Inlet
A Below, above or beside openable window, air brick, etc.	300	50
B Below gutters, soil pipes, drain pipes.	75	75
C Below eaves.	200	50
D Below balconies or car port roof (lowest point).	200	50
E From vertical drain or soil pipes.	75	50
F From internal or external corner or to a boundary alongside the terminal. *	200	50
G Above ground or balcony or roof.	200	100
H From surface or boundary facing a terminal. *	600	100
I From terminal facing a terminal.	1,200	1,200
J From opening in a car port.(not recommended)	1,200	100
K Vertically from terminal on same wall.	1,500	1,500
L Horizontally from terminal on same wall.	300	300

*The dimensions given in the table above may need to be increased to avoid wall staining and nuisance depending on site conditions.

It is advisable for horizontal flue terminals to place a 45° elbow at the end of the flue to direct the condensate plume up and away from the property. If the air intake is within 500mm of the flue outlet the air must not terminate at a level above that of the flue

If either the air inlet or flue outlet terminate at a height of less than 2.1m above ground level, the terminal must be protected by a suitable guard. The K4 terminal guard (with plastic coating), manufactured by Tower Flue Components Ltd is suitable for this purpose.

3.8.5 Clearances From Wall

Flue outlet and air inlet terminations must be at least 40 mm from the wall face.

3.8.6 Distance Between Flue Outlet & Air Inlet

There is no maximum - the terminations must not be on opposite sides of the dwelling but can be in areas of unequal pressure..

A minimum clearance of at least 200 mm must be left between the terminations.

3.8.7 General Installations

All parts of the system must be constructed in accordance with BS 5440 Part 1, except where specifically mentioned in these instructions.
All pipe work must be adequately supported.
All joints other than approved push-on or plastic compression connectors must be made and sealed with solvent cement suitable for muPVC pipes and conforming to BS 6209: 1982.
External wall faces and any internal faces of cavity walls must be made good. Rubber collars are available for flue and air terminals to finish the external wall face around the terminals (Part No C.08.0.00.07.0)

3.9 AIR SUPPLY

The KESTON Qudos 28s and Qudos 28sP are room sealed appliances and therefore do not require purpose provided ventilation to the boiler room for combustion air.

3.10 COMPARTMENT INSTALLATION

Due to the low casing temperatures generated by the boiler, no compartment ventilation is required. However, the cupboard or compartment must not be used for storage.

3.11 CONDENSATE DRAINAGE

Being a condensing boiler, the Qudos 28S and Qudos 28SP are fitted with a condensate trap at the base of the heat exchanger and flue assembly, with facility to connect to a drain point underneath the appliance.

The condensate trap is packed loose with the appliance and MUST be fitted BEFORE firing the appliance.

Use only plastic piping and do not reduce below 15 mm internal diameter within the dwelling. Condensate should preferably be drained into the sanitary waste system or, alternatively, the rainwater system of the property in most cases. Ensure in all cases that the disposal of the condensate is in accordance with any local regulations in force.

Termination of the pipe must be either at a branch or stack internal to the house, or externally at an open gully. Alternatively, discharge into a purpose made condensate soakaway can be considered. Existing or purpose built drains must use suitable corrosion resistant material as condensate is mildly acidic.

The connection to the condensate drain of the boiler, and the condensate drain pipework itself, should be properly sealed to ensure there is no possibility of leakage into the dwelling.

A minimum slope downwards towards the drain of 1 in 20 is essential. Freezing of the termination and pipework must be prevented. Any drainage pipes outside the property must be at least 32 mm *inside* diameter.

4. INSTALLATION OF THE BOILER

Read Chapter 3 - Boiler Location and decide upon the position of the boiler.

Installation of the boiler is straightforward but consideration must be given to access to allow flue and air pipes to be pushed through walls and ceilings. The order in which the components are installed will depend upon particular site conditions, but in general it will be easiest and most accurate to install the boiler and then build up the flue outlet and air inlet pipes to the terminal - this is the sequence described.

4.1 WALL MOUNTING BRACKET

a Place the bracket on the wall horizontally with the pre-drilled holes at the bottom and position as dictated by the template supplied within the boiler packaging.

b Drill through the centre hole of the bracket, plug the hole and fix in position.

c Using a spirit level make sure the bracket is completely level and mark the position of the other screw holes.

d Remove the bracket and drill the holes in the positions marked. Plug these holes.

e Screw the bracket to the wall using screws of an appropriate size for the wall type (No. 12 x 2 inch wood screws normally suffice).

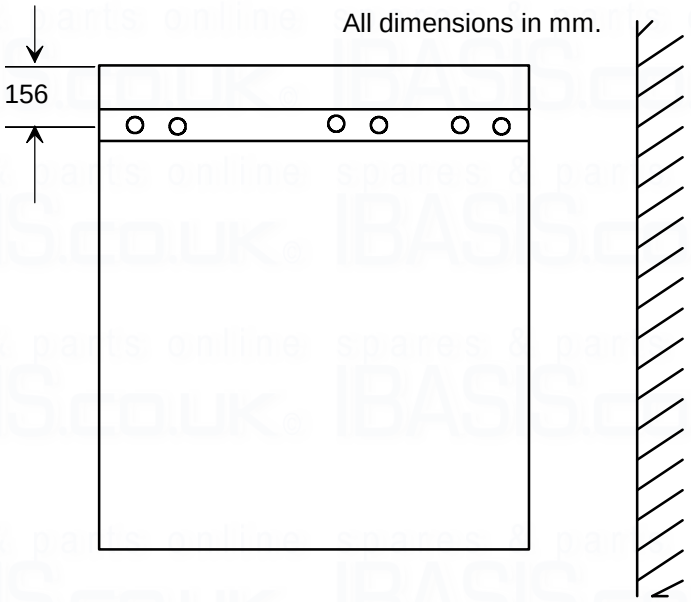

Figure 4.1 Wall Mounting Fixing Locations

4.2 MOUNTING THE BOILER (after system cleaning and testing)

a Lift and locate the boiler onto the stud and the two locating pegs protruding from the wall bracket. (lift the boiler via the back frame only)

b Lower the boiler for hanging on the two pegs.

c Fix the boiler on the bracket stud using the nut and the washers supplied.

d Make the gas, flow, return, condensate and PRV connections to the system. Check all joints for tightness

DO NOT FIRE THE BOILER UNTIL THE CONDENSATE TRAP IS SECURED IN POSITION.

4.3 ASSEMBLY PRACTICE

Remove all plastic debris and burrs when installing air intake piping. Plastic filings caused by cutting muPVC pipe must not be allowed to be drawn into the combustion air blower. Prevent dust entering the air intake when cutting on building sites. Blower failure which is determined to be caused by plastic filings or other debris will not be covered by guarantee.

4.4 INSTALLING FLUE AND AIR PIPES

IMPORTANT - When installing the boiler on an existing system a new flue and air intake system MUST also be installed. You must NOT re-use existing flue or air pipework components.

NB: When installing the boiler, consider:

Flue Spigot Assembly

The flue spigot (50mm muPVC) is inside the accessory bag.

Put the flue spigot assembled with the test plug on the cabinet frame and secure it by fastening the two M6 screws. Couple the spigot to the internal flue pipe using the flexible couple and fastening clips. Ensure the clips are properly secured and no leakage can occur.
Remember the flue pipe must slope downwards back towards the boiler and this is best achieved using 92.5° bends.

a Using the template supplied within the boiler packaging mark the positions of the two holes for the flue and air pipes on the wall(s) or ceiling.
b Drill the two holes in the wall/ceiling, preferably using a core drill.
c Measure, cut and check the air and flue pipes to pass to the exit from the wall(s) or ceiling.

Always thoroughly deburr all pipes and, most important, remove shavings from within the pipe.

d Mount the boiler on the wall bracket and fix the air spigot (packed loose with the boiler and with appropriate gasket) to the boiler air inlet connection tightly to ensure there is no leakage. Assemble, using adhesive, the pipework from the boiler connections to the exit from the first wall/ceiling (remount the boiler if removed). When pushing pipe through walls, ensure grit and dust is not allowed to enter the pipe.
Ensure pipes are fully engaged into sockets and solvent welded with no leaks.
e Using the same methods drill any further holes (always covering existing pipework), cut and assemble the pipework.
f From outside, complete the two terminations - See Section 3.8 Flue System and make good all holes. (wall sealing collars are available to make good hole areas on the wall face (part number C.08.0.00.07.0)
g Support any pipes whose route could be displaced either of its own accord or by accident. Any horizontal run over 1m or vertical runs of any length must always be supported. Brackets should be placed at intervals of approximately 1m.
h Check all connections for security and re-seal any joints using solvent cement where soundness may be in doubt.

Note: It is equally important to seal the air inlet with solvent cement as the flue outlet pipe joints.

4.5 CONDENSATE DRAINAGE

NB: When installing the boiler, consider:
Condensate Trap Assembly
The condensate trap is fitted loose inside the cabinet.
i) Fit the condensate trap through the hole in the base of the boiler frame.
ii) Remove the cap fitted to the condensate drain spigot at the base of the heat exchanger.
iii) Securely connect the condensate trap inlet to the heat exchanger drain spigot. Be carefully to the correct position of sealing O-ring.
Iv) Secure the trap to the boiler frame using the fixing bolts supplied.

Connect the condensate drainage system to the boiler. It is advisable to use a detachable fitting at connection to the boiler to enable easy removal for servicing.
Fill the condensate trap by pouring water into the boiler flue until water is seen to flow freely from the condensate drainage system. Make the final connection of flue pipe to the boiler.

Details are provided in Chapter 3 - Section 3.11 Condensate Drainage
Connection : 22 mm plastic pipe.

4.6 WATER SYSTEM

Connect the flow and return HEATING CIRCUIT system pipework to the boiler. Details of system requirements are given in Chapter 3 - Section 3.7 Water Systems.

Connections : 0.75 inch BSPM

For optimum performance after installation, this boiler and its associated central heating system must be flushed in accordance with the guidelines given in BS7592:1992, "Treatment of water in domestic hot water central heating systems".
This must involve the use of a proprietary cleaner, such as Fernox Superfloc, or BetzDearborn's Sentinel X300 or X400. Full instructions are supplied with the products, but for immediate information, please contact Fernox on 01799 550811 or BetzDearborn on 0151 420 9563.
For long term protection against corrosion and scale, after flushing, it is recommended that an inhibitor such a Fernox MB1 or BetzDearborn's Sentinel X100 is dosed in accordance with the guidelines given in BS7593:1992.

4.7 GAS SUPPLY

Connect the gas supply to the appliance. Details of gas supply requirements are given in Chapter 3 - Section 3.6 Gas Supply. Supply of adequate gas pressure **(with the boiler running)** is critical to ensure reliable operation of the boiler.

Connections : 0.5 inch BSPM

4.8 ELECTRICAL SUPPLY

The entry point(s) for the electrical supply cable(s) is in the base of the appliance (see Section 3.2 Service Connections fig. 3.1.2) via a cord grip bush. Feed the cable through the bush and route inside the cabinet to the connection strip located to the front bottom right area of the cabinet.

1. The electrical supply must be as specified in Chapter 3 - Section 3.4 Electrical Supply.
   WARNING : THIS APPLIANCE MUST BE EARTHED.
2. All external controls and wiring must be suitable for mains voltage. Supply wiring should be in PVC insulated cable not less than 0.75mm^2 (8.0mm dia) to BS 6500 Table 16 (material code H05VV-F).
3. The permanent live supply connection may be via a 3 amp fused double pole switch, serving only the boiler. (Refer to Chapter 3 - Section 3.4 Electrical Supply). Any 230VAC system controls for the boiler must also be supplied via this isolator.
4. Basic Wiring Installation
   Securely tighten the terminal screws and route the cable(s) through the re-openable cable clips. Ensure all cables are secured and that the cord grip bush is tightened to securely grip the main cable at entry to the cabinet. Remove the factory fitted link wire between the room thermostat terminals on the boiler.
   The supply cable(s) must be connected to the main terminals as follows:-

Main Supply L	- Brown wire (Live) 3A permanent supply
Main Supply N	- Blue wire (Neutral) for 3A permanent
Main Supply E	- Yellow/Green Wire (Earth)
CH Demand SL1	- 230V Switched Live - i.e. Room Thermostat

   Ensure connection is made such that if the cable slips in its anchorage the current carrying conductors become taut before the earthing conductor.

5 Advanced Features Wiring
   The Qudos 28s features comprehensive and advance functionality as standard. Whilst these advances functions are not mandatory, they will provide enhanced boiler operation performance and efficiency. Detailed below are suggested wiring methods to activate various functions.

5.1 Twin Thermostat Operation with Weather Compensation

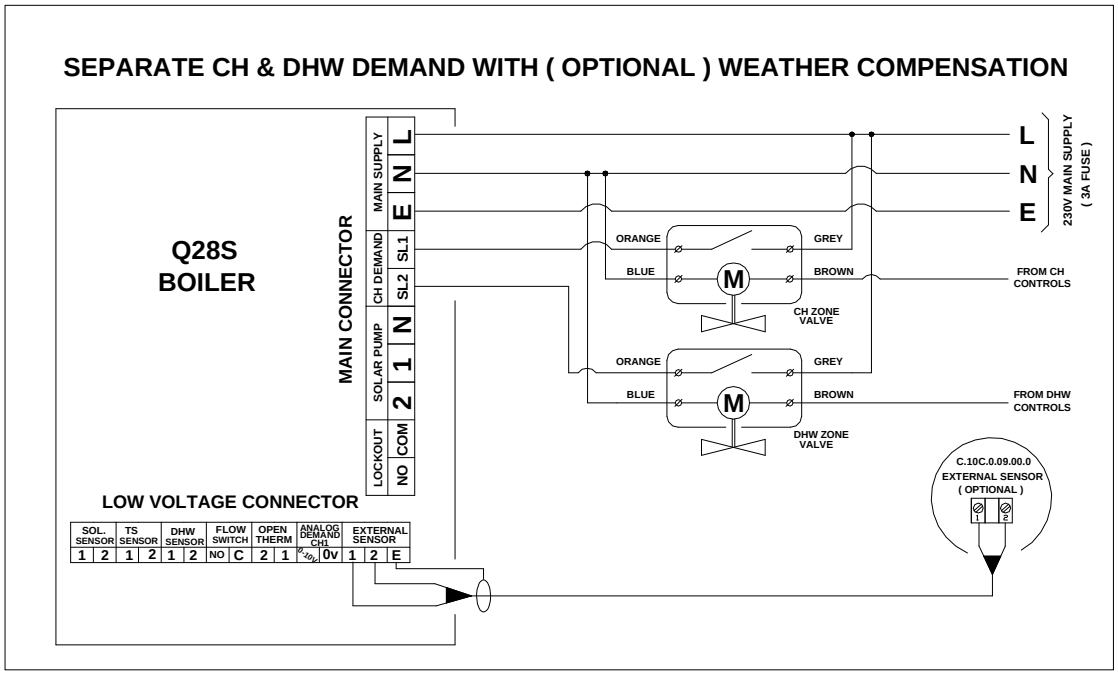

5.2 Modulation of DHW generation

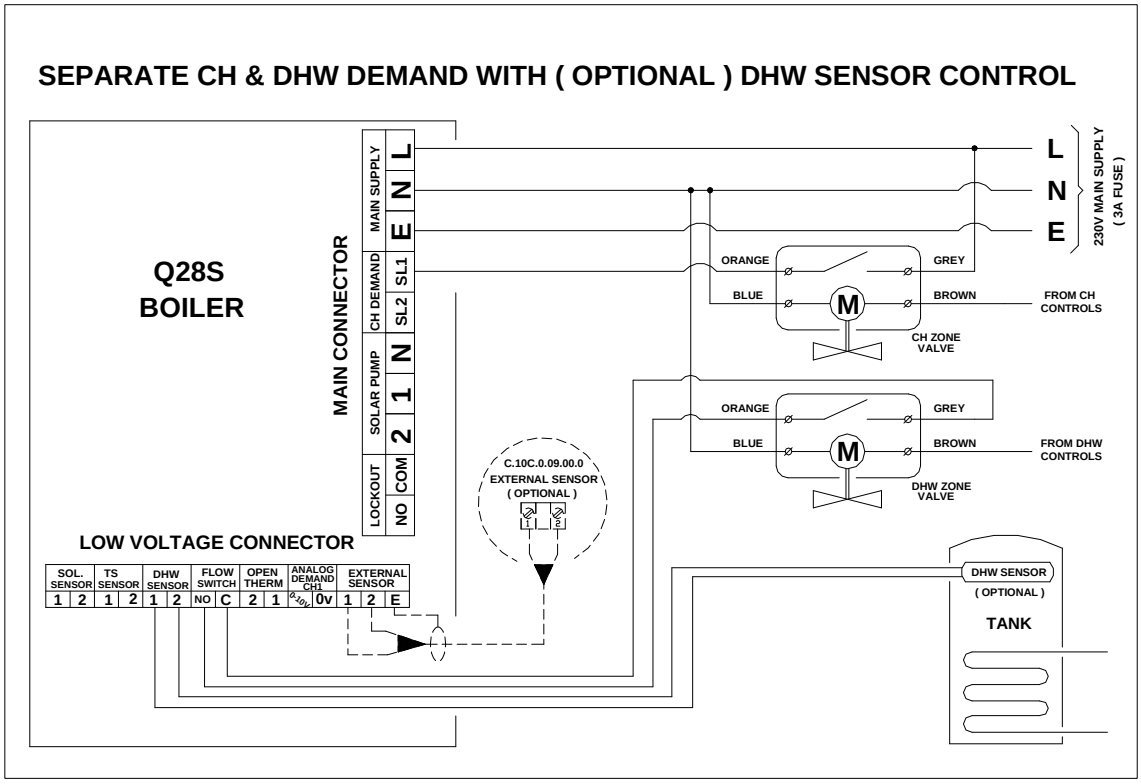

5.3 Solar Control

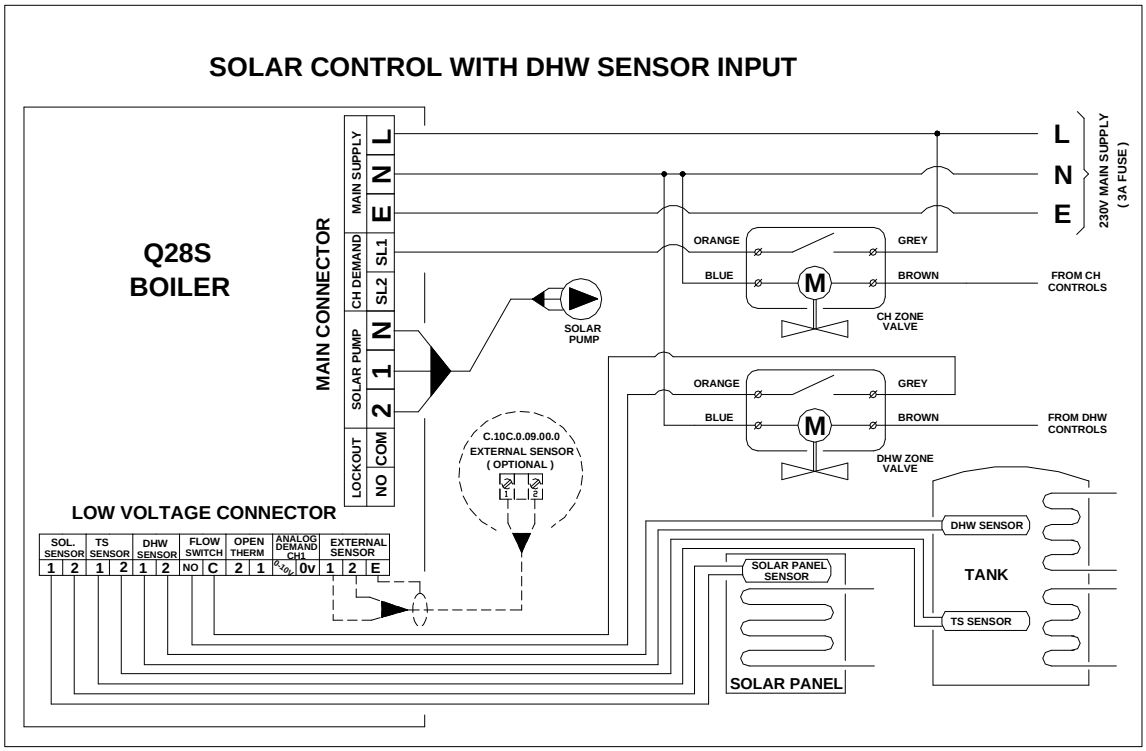

4.9 EXCHANGING A BOILER

Before removing an existing boiler add Fernox Supafloc, or equivalent cleaning agent, in accordance with the manufacturers instructions. Open all radiator valves and fire the boiler. When the system is fully heated, shut off the gas supply and drain down the central heating system.

Important

The Qudos 28s and Qudos 28sP condensing boilers contain components which could be damaged or blocked by grease, dirt or solder etc. It is essential that sludge or scale is removed from an existing system before fitting the boiler.

The guarantee provided with the Keston Qudos 28s and Qudos 28sP does not cover damage caused by system debris or sludge.

Connect the new boiler as instructed in this manual and fit in accordance with Sections 4.1 to 4.8

Fill to a pressure of about 2.5 bar. Check the complete system for water soundness. If leaks need to be rectified using flux or solder the system must be flushed cold again before proceeding.

Reduce the pressure to the Initial System Design Pressure. Vent the system.

Gas Supply

The complete gas installation up to the boiler gas control valve must be checked for soundness. BS 6891.

Electrical Installation

Carry out preliminary electrical safety checks, i.e. Earth continuity, Polarity, Resistance to Earth, Short Circuit and earth loop impedance using a suitable test meter.

Initial Firing

The gas pressure setting is factory adjusted to within the required range and does not need readjustment. If the reading is incorrect then check such factors as tightness of the air and flue pipe joints, pressure sensible joints and the gas inlet pressure (minimum 18 mbar required for Natural Gas and 31 mbar required for LP gas). If all joints are sound and the gas inlet pressure is satisfactory set the gas pressure check the gas input. Full details of this procedure are given in Section 5.9 Timing The Gas Meter.

Combustion Testing

It is advisable on all installations that the combustion quality is checked by measuring the carbon dioxide (CO_2), or oxygen (O_2), level. This procedure is detailed in Section 5.7 Combustion Testing. Badly tuned combustion will lead to reduce the life of the boiler and invalidate the warranty.

5. COMMISSIONING OF THE BOILER

Important:

This condensing boiler contains components which could be damaged or blocked by grease, dirt, solder etc., from the water system. The following commissioning procedures must be followed precisely.

It is essential that combustion is checked at high and low rate , as per Section 5.7, using a calibrated flue gas analyser set for the relevant gas type.

5.1 INITIAL FLUSHING

All waterways within the Keston Qudos 28s and Qudos 28sP are either copper or high alloy stainless steel. As a result water treatment chemicals for central heating boilers such as Fernox MB1, Sentinel X100 or equivalent, are suitable. In any event reference must be made to BS 7593 : Treatment Of Water In Hot Water Central Heating Systems.

a. Disconnect the boiler from the system at the flow and return connections and temporarily link the flow and return pipes on the system.

b. Flush the entire system until clean water is discharged, free from dirt, flux, solder etc. The use of a flushing chemical is recommended, e.g. Fernox Supafloc, or equivalent.
Sludge and scale must be removed from an existing system. Boiler failure due to system debris or sludge shall invalidate the guarantee.

c. Connect the system to the boiler and fill in accordance with Section 3.7 - Water Systems. At this stage fill to a pressure of about 2.5 bar.

d. Check the complete system for water soundness. If leaks need to be rectified using flux and solder, the system must be flushed cold again before proceeding.

e. Reduce the pressure to the Initial System Design Pressure. Vent the system

5.2 GAS SUPPLY

The complete gas installation up to the boiler service cock must be checked for tightness BS 6891.

5.3 ELECTRICAL INSTALLATION

Carry out preliminary electrical safety checks, i.e. Earth continuity, Polarity, Resistance to Earth, Short Circuit using a suitable test meter.

5.4 LP GAS

The Keston Qudos 28s and Qudos 28sP are supplied preset for the gas designated on the boiler packing. LPG installations must use Qudos 28sP model only.

5.5 INITIAL FIRING

Important

Checking the gas pressure to the pre-mix burner requires a special procedure, outlined below, which must be carried out.

a. Purge the gas supply in accordance with BS 6891.

b. Vent the water system.
Important:
The heat exchanger consists of corrugated tubes which can trap an air pocket. Great care must be taken to ensure that water flow has been established through the heat exchanger and thus ensuring no air pockets remain in the heat exchanger and pipe work. Firing the boiler while an air pocket exists in the heat exchanger could damage it.

c. Turn the gas service cock to ON.

d. Turn on the electrical supply, setting any external controls to call for heat. The radiator symbol should illuminate in the top left of the display along with a “1” to the left of the radiator symbol or a “2” to the right.

e. Select the CH temperature using the “▼” of the control panel, set the CH temperature to 80C. Press the “ENTER” button to store this setting and press the

"RESET" button so that the display reverts to show the actual flow temperature of the boiler.

Once a heating demand is received the fan will start and the boiler will enter the pre-purge phase. During this phase the boiler pump will also start to run. The pump and fan symbols should illuminate on the top line of the indicating they are both running. After 5 seconds the boiler will start to spark, indicated by a flashing flame symbol on the top row of the display, and will energise the gas valve. When ignition is achieved the flame symbol on the top row will stop flashing and remain steady.

If an air lock or other blockage is present the unit may go to overheat or water pressure lockout. This will be indicated by the display flashing error code "E12" or "E67". If this occurs clear the blockage and/or purge the air from the system, and press the "Reset" button to restart the ignition sequence.

If ignition does not occur, the boiler, at approximately 20 second intervals, will make four further attempts to light the burner.

If after five automatic attempts the boiler still fails to ignite, the display will show the code "E 02" indicating no ignition.

If, after five manual attempts (to allow for purging of any air in the gas line), the boiler still fails to ignite refer to Section 6.3 - Fault Modes.

f. Check for gas tightness between the gas service cock and connection to the burner manifold.

g. Check for soundness of the connection between the heat exchanger base and the condensate trap.

5.6 HOT FLUSHING

a. Allow the system to heat up, checking for water soundness.

b. Follow instructions provided with the cleaning agent, i.e. Fernox Supafloc, or equivalent. Turn off the boiler and flush the water system while still hot. Thoroughly flush the system with clear water.

c. Refill the system using a quality water treatment such as Fernox MB1 or Sentinel X100. For sealed systems, fill to the required Initial Design Pressure.

5.7 COMBUSTION TESTING - MANDATORY CHECK

Although the gas pressure is preset at the factory it is required to assure proper combustion by measuring gas input and the level of carbon dioxide, or oxygen and carbon monoxide, in the flue outlet from the boiler. Over firing or under firing the burner will reduce the longevity of the appliance and may result in excessive carbon monoxide levels

Carbon dioxide and carbon monoxide are colourless, odourless gases produced by all combustion processes. When the Keston condensing boiler is operating properly, carbon dioxide (CO_2) levels will be between 8.4 & 8.8% (low rate) and 8.9 & 9.3% (high rate) and carbon oxide (CO) levels will be between 5 to 20 ppm (low rate) and 50 to 150 ppm (high rate) for natural gas. For LP gas, carbon dioxide (CO_2) levels will be between 9.5 & 9.9% (low rate) and 10.3 & 10.7% (high rate) and the carbon monoxide will be between 5 & 20 ppm (low rate) and 50 & 150 ppm.

In any event, the CO_2 level at low rate must ALWAYS be less than CO_2 levels at high rate.

To measure CO_2 levels in the Keston boiler remove the 1/8" plug from the flue outlet pipe spigot (Figure 6.7.4 item 17). Insert the probe of a calibrated combustion analysis meter and sample the gases as instructed in the test equipment's instructions.

When firing the boiler for the first time since installation, the CO level at high rate may be between 100-220 ppm and between 50-80 ppm at low rate. This is due to compounds used during manufacture curing within the combustion chamber. On boilers which have been fired for more than one hour since installation, the CO levels should not exceed 150 ppm at high rate and 50 ppm at low rate. If CO levels above these values are experienced, the combustion chamber and flue system should be investigated.

The Qudos 28s is factory set for combustion and should need no adjustment. However, in the event adjustment is required.

Check combustion errors are not a result of incorrectly installed flue and/or air system, terminal location or damage or debris on the burner. If all these factors are found to be in order precede as follows:

1) Set any controls to call for heat.

2) Press the "▼" button repeatedly until the display shows "SEr", then press "ENTER". Press the "▼" until the display shows "100%". Press "ENTER" and the boiler will be locked on at Maximum rate. If no further buttons are pressed for 10 minutes the boiler will automatically revert to normal operation.

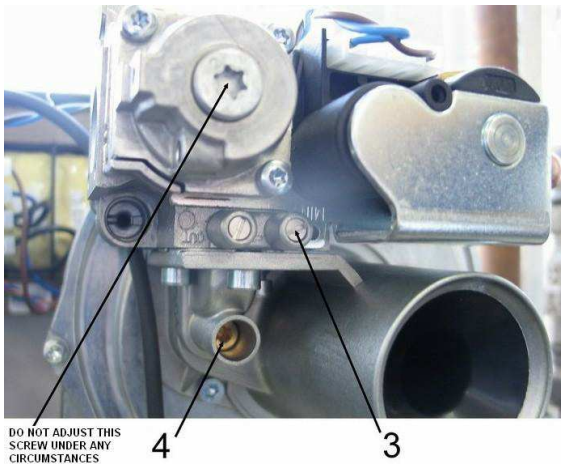

3) Measure the CO_2 reading in the flue gases and adjust, if necessary, the adjustment screw (pos 4) to produce a CO_2 reading of 8.9% to 9.3% with a corresponding CO level of 50 to 150 ppm for natural gas and 10.3 to 10.7% with a corresponding CO level of 50 to 150 ppm for LPG. NORMAL ADJUSTMENT, IF REQUIRED, SHOULD NEED NO MORE THAN HALF OF ONE ROTATION OF THE ADJUSTMENT SCREW (pos. 4).

4) Press the "RESET" button once and then press the "ENTER" button. Use the "▲" button until the display shows "32%" ("30%" for LPG). Press the "ENTER" button and the boiler will be locked on at Minimum rate. If no further buttons are pressed for 10 minutes the boiler will automatically revert to normal operation.

5) Measure the CO_2 reading in the flue gases. The CO_2 reading must be 8.4% to 8.8% with a corresponding CO level of 5 to 20 ppm for natural gas and 9.5% to 9.9% with a corresponding CO level of 5 to 20 ppm for LPG. THE CO2 LEVEL AT LOW RATE MUST ALWAYS BE LESS THAN THE CO2 LEVEL AT HIGH RATE..

6) Press the "RESET" button once and then use the "▼" button until the display shows "100%". Press the "ENTER" button and the boiler will be locked on at Maximum rate. Check the setting is within the range established in step 3. If not, r e p e a t the process again from step 3.

If following the above procedure, combustion levels described above at both high and low rate could not be obtained, please turn off the appliance and isolate the gas to the appliance. Telephone KESTON BOILERS technical support (phone no. 0208 462 0262)

8) Press the "RESET" button twice to return to the normal operation mode and display.

5.8 CHECKING THE GAS PRESSURE

With the boiler running measure the burner pressure at the burner pressure test nipple. (pos. 4).

NB: It is advisable to carry out this test with the thermostat set to maximum and the system water cold to ensure the boiler is running at maximum rate.

The gas setting is factory adjusted to within the required range and should not need adjustment. If the reading is incorrect then check such factors as tightness of the air and flue pipe joints and the gas inlet pressure (pos. 3) (minimum 18 mbar required for natural gas, minimum 31 mbar required for LP gas).

If all joints are sound and the gas inlet pressure is satisfactory check the gas input by timing the gas meter as detail in Section 5.9 Timing The Gas Meter. If the gas input cannot be measured then it's compulsory to measure the combustion quality as detail in Section 5.7 Combustion Testing.

5.9 TIMING THE GAS METER

After the boiler has been started, and with no other appliances using gas, time the gas meter to be certain that the unit is running at the proper gas input. Determine the cubic feet of gas passing through the meter and determine the input in Btu per hour. Input must be within plus or minus 5% of the rated input.

Time, in seconds, the time taken to pass 2 cubic feet of gas through the meter (i.e. one revolution of a 2 cu ft dial) or 0.1 cubic metres if the meter is of the new metric digital type.

Model	Time for 2 cu ft	Time for 0.1 cu m
Qudos 28s (natural gas)	71 to 78 seconds	125 to 138 seconds
Qudos 28sP (LPG)	152 to 168 seconds	272 to 300 seconds

If the meter timing is found to be incorrect when the boiler is firing at maximum rate contact Keston Boilers Ltd for further guidance.

5.10 HANDING OVER TO THE USER

It is important to fully explain the following:

a. Procedure to light and turn off the boiler, including isolation of the electrical supply if necessary.

b. The function of the lockout feature must be explained :
If the display shows “E 02” this means that the boiler has failed to light. Press the “Reset” button and wait
   i) If lockout recurs immediately then the gas supply should be checked as ON, otherwise consult a Service Engineer.
   ii) If it is not possible to relight, the boiler must be isolated and a Service Engineer called in to rectify the fault.

c. Advise that a reduction in the water pressure reading on the system pressure gauge, for sealed systems, indicates a leak which should be rectified before further use.

d. Advise that the appliance must be serviced by a competent person at least once a year.

Complete all sections of the **Chapter 10 Gas Boiler Commissioning Checklist** that are relevant to the appliance installation. The details will be required in the event of any warranty work.

e. Advise on the frost protection and pump/fan exercise feature.

f. Advise the user that a plume of water vapour (steam) from the flue terminal is normal and that there is no need for concern.

6. FAULT FINDING

6.1 ELECTRICAL CONTROL SEQUENCE

When the external control(s) are calling for heat, power will be fed to the boiler connection strip at terminal SL1 (Switched Live) and N (Neutral) and the radiator symbol with a “1” will appear in the top left of the display. If the user control setting of the CH temperature is to a temperature above the actual boiler flow temperature and provided all safety sensors are confirmed as OK the control PCB will initiate the following sequence.

(1) The fan and pump will start (indicated by a pump and a fan symbol on the top row of the display).

(2) When the fan reaches running speed, the control PCB will start the ignition sequence.

(3) After a pre-purge period of about 5 seconds, the gas valve will open to allow gas to mix with the air at the suction side of the fan and the ignition spark will occur at the main burner (indicated by a flashing flame symbol on the top row of the display).

(4) When the burner ignites, the flame is detected by the control PCB through the combined flame sensor/ignitor and the ignition spark is stopped. The flame symbol on the top row the display stops flashing and becomes constantly illuminated. The boiler is now in its normal run condition.

(5) The boiler will automatically and continuously adjust its power output and pump speed to best match the demands of the system at any time.

(6) The burner will continue to operate until the gas valve interrupts the gas supply. The gas valve will be closed by the control PCB if power is interrupted to the boiler by any external control or the boiler exceeds the requested temperature. If an interruption to the gas supply causes loss of the flame, the control box will pause for approximately 10 seconds and then attempt to re-ignite the unit. If this attempt fails, i.e. due to continued lack of gas supply, the boiler will make four further attempts to ignite at intervals of approximately 10 seconds and will then go to a lockout state (the display shows “E02”). Once the gas supply has been resumed the boiler can be reset by pressing the “Reset” button.

(7) The boiler can also be shut down by the cabinet temperature sensor, water pressure sensor or flue overheat sensor.

Any failure of the boiler to sequence in the above manner should be investigated using the following trouble shooting table.

Before attempting any electrical fault finding, always carry out preliminary electrical system checks. On completion of any service/fault finding task which has required the breaking and remaking of electrical connections, the checks, earth continuity, polarity, short circuit, resistance to earth must be repeated.

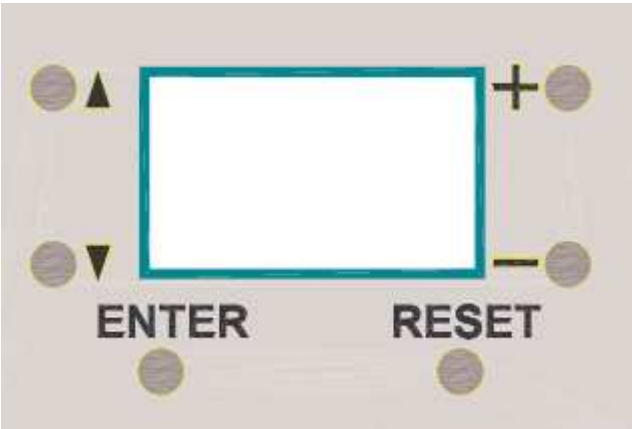

QUICK REFERENCE

6.2 NORMAL OPERATION

The Qudos 28s and Qudos 28sP boilers feature a user display which shows actual flow temperature. However, the display can also be used to show other information about the operation of the boiler. Press the "▼" button repeatedly until the display shows "SHP" and then press the "ENTER" button, you will enter the installer information mode. Press the up arrow to the left of the display once to show the first reading, flame current. Press the up arrow again to move on to the next reading. The table below shows the values associated with consecutive up arrow button press:

INSTALLER INFORMATION MODE (SHP)

Info No.	Meaning
1	The flame current (in micro amps) detected from the burner (should be <1 when off and >2.5 when burner on. Low flame current readings suggest poor combustion and may lead to flame lockouts. Check gas supply, air supply and combustion setting.)
2	Actual CH flow temperature (maximum 84C) - display indicates a radiator symbol and a "1"
3	Actual CH return temperature (maximum 72C) - display indicates a radiator symbol and a "2". (NB Flow temperatures more than 20C above return temperature may lead to overheat and noise problems. Check the pump performance and the system for blockages)
4	Actual DHW temperature - display indicates a tap symbol (NB Only relevant if the DHW sensor option is connected)
5	Actual Flue Temperature - display indicates the flame and fan symbols (NB: Flue temperatures above 75C may cause reduced boiler output. Flue temperatures above 80C will cause boiler lockout)
6	System water pressure, in bar. (Maximum 2.7 bar, minimum 0.4 bar. The boiler will shut down if the water pressure drops below 0.4 bar)
7	Outside temperature - display indicates a small graph on the bottom row. (NB: Only relevant if an outside temperature sensor is detected)
8	DHW flow rate - not relevant for this model
9	Current fan speed (rpm) - display indicates a fan symbol.
10	Active setpoint - the temperature that the boiler is attempting to reach and maintain as determined by the user setting and/or the outside temperature sensor/advanced controls.
11	The current boiler configuration - not used for general diagnostics
12	The hours that the boiler has been connected to a power supply since manufacture of the PCB - P:nn is thousands of hours plus nnn is single hours (i.e. 1345 hours would display as P:01 and 234.
13	The hours/days that the burner has been operated since manufacture of the PCB - B:nn is thousands of hours plus nnn is single hours (i.e. 1345 hours would display as B:01 and 234.

You can return to the normal display mode at any time by pressing the "Reset" button.

During normal operation the radiator symbol will indicate the mode of operation. If the radiator symbol is not present then there is no demand on either SL1 or SL2. Other methods of placing a demand on the boiler is via an Opentherm control, such as the Keston Room Controller, or a 0-10VDC input. Either alternative input is indicated by the inverted "T" symbol on the bottom row of the display.

6.3 FAULT MODES

If a situation is detected which the boiler considers may cause damage to the appliance the boiler will enter a lockout mode and stop functioning. After clearing the problem the user must also press the "Reset" button once to resume boiler operation in most circumstances. However, certain faults, as designated "Service Reset Required" in the table below, will not reset from the fascia button. These require the Service Reset button on the main PCB (see Fig 6.5) to be pressed. IN BOTH TYPES OF LOCKOUT, TURNING THE POWER ON THEN OFF WILL NOT CLEAR A LOCKOUT SITUATION

ERROR CODES

Display	Description of fault
E01	Flame sequence lockout - possible board or electrical supply fault.
E02	Ignition failure. Boiler made five unsuccessful attempts to ignite. Check gas supply, ignitor condition and spark gap. Check flue and air system and condensate drainage for obstruction. Check gas valve setting and operation
E03	Spark gap too small OR Gas valve faulty - check connections to gas valve and operation of gas valve solenoids
E04	Flame lost 5 times in a single demand period - check combustion setting high and low, and ignitor condition
E12	Flow overheat - check water circulation is not blocked, check pump operation and flow thermistor condition.
E20	Fan unable to reach ignition rate -check fan and impeller restriction
E24	Return exceed flow temperature by 10C - check direction of water circulation and operation of flow and return thermistors
E25	Flow temperature increased too quickly - check water circulation and pump operation
E26	Water pressure sensor is open circuit/disconnected
E28	Fan fault - check connector to fan operation of fan
E31	Flow thermistor closed circuit - check the connections and wires to the flow thermistor are intact not short circuited
E32	Return thermistor closed circuit - check the connections and wires to the return thermistor are intact not short circuited
E33	DHW thermistor closed circuit - check the connections and wires to the DHW thermistor are intact not short circuited, if present
E35	Flue thermistor closed circuit - check the connections and wires to the flue thermistor are intact not short circuited
E36	Flow thermistor open circuit/not connected - check the connections and wires to the flow thermistor are intact and connected
E37	Return thermistor open circuit/not connected - check the connections and wires to the return thermistor are intact and connected
E38	DHW thermistor open circuit/not connected - check the connections and wires to the DHW thermistor are intact and connected, if present
E40	Flue thermistor open circuit/not connected - check the connections and wires to the flue thermistor are intact and connected - SERVICE RESET REQUIRED
E52	Flue overheat - check combustion and heat exchanger. Reset required on main PCB - SERVICE RESET REQUIRED
E62	Water pressure is > 2,7 bar - check operation of expansion vessel or filling loop is left open
E67	Water pressure is < 0.4bar
E70	Cabinet overheat - thermal fuse will need replacing. Check hot gasket joints and combustion for cause of overheat. Reset required on main PCB - SERVICE RESET REQUIRED
E73	Code plug error - check loom and connections to main pcb.
E74	Supply voltage < 190V - check mains supply condition
E75	Supply voltage > 270V - check mains supply condition
E76	Solar panel sensor closed circuit - if present.
E77	Solar panel sensor open circuit - if present
E95	Solar tank sensor closed circuit - if present
E96	Solar tank sensor open circuit - if present

ERROR HISTORY

The Qudos 28s has an internal memory function that stores the last six errors encountered along with the sensor readings at that time and the time elapsed between each error occurring. This is very useful for diagnosing the cause of an error lockout, particularly when the error is intermittent.

Press the "▼" button repeatedly until the display shows "SHE" and then press the "ENTER" button, you will enter the Error History mode. Press the "▲" button to show the error number to investigate (Er1 is the most recent and Er6 is the oldest). Having selected the error press "ENTER". Press the "▲" to scroll through the readings stored at the time of the lockout occurring. The table below shows the values associated with consecutive "▲" button press:

No.	Meaning
Enn	The error code recorded for the lockout
2	Actual CH flow temperature (maximum 84C) - display indicates a radiator symbol and a "1"
3	Actual CH return temperature (maximum 72C) - display indicates a radiator symbol and a "2". (NB Flow temperatures more than 20C above return temperature may lead to overheat and noise problems. Check the pump performance and the system for blockages)
4	Actual DHW temperature - display indicates a tap symbol (NB Only relevant if the DHW sensor option is connected)
5	Actual Flue Temperature - display indicates the flame and fan symbols (NB: Flue temperatures above 75C may cause reduced boiler output. Flue temperatures above 80C will cause boiler lockout)
6	System water pressure, in bar. (Maximum 2.7 bar, minimum 0.4 bar. The boiler will shut down if the water pressure drops below 0.4 bar)
7	Outside temperature - display indicates a small graph on the bottom row. (NB: Only relevant if an outside temperature sensor is detected)
8	Position in sequence: 0 - Initialise; 1 - Standby; 4 - Purge; 6 - Safety; 7 - Run; 8 - Postpurge; 9- Inter-Purge; 12 - Lockout
9	Time in hours since last error occurred

6.4 FUNCTIONAL FLOW WIRING DIAGRAM

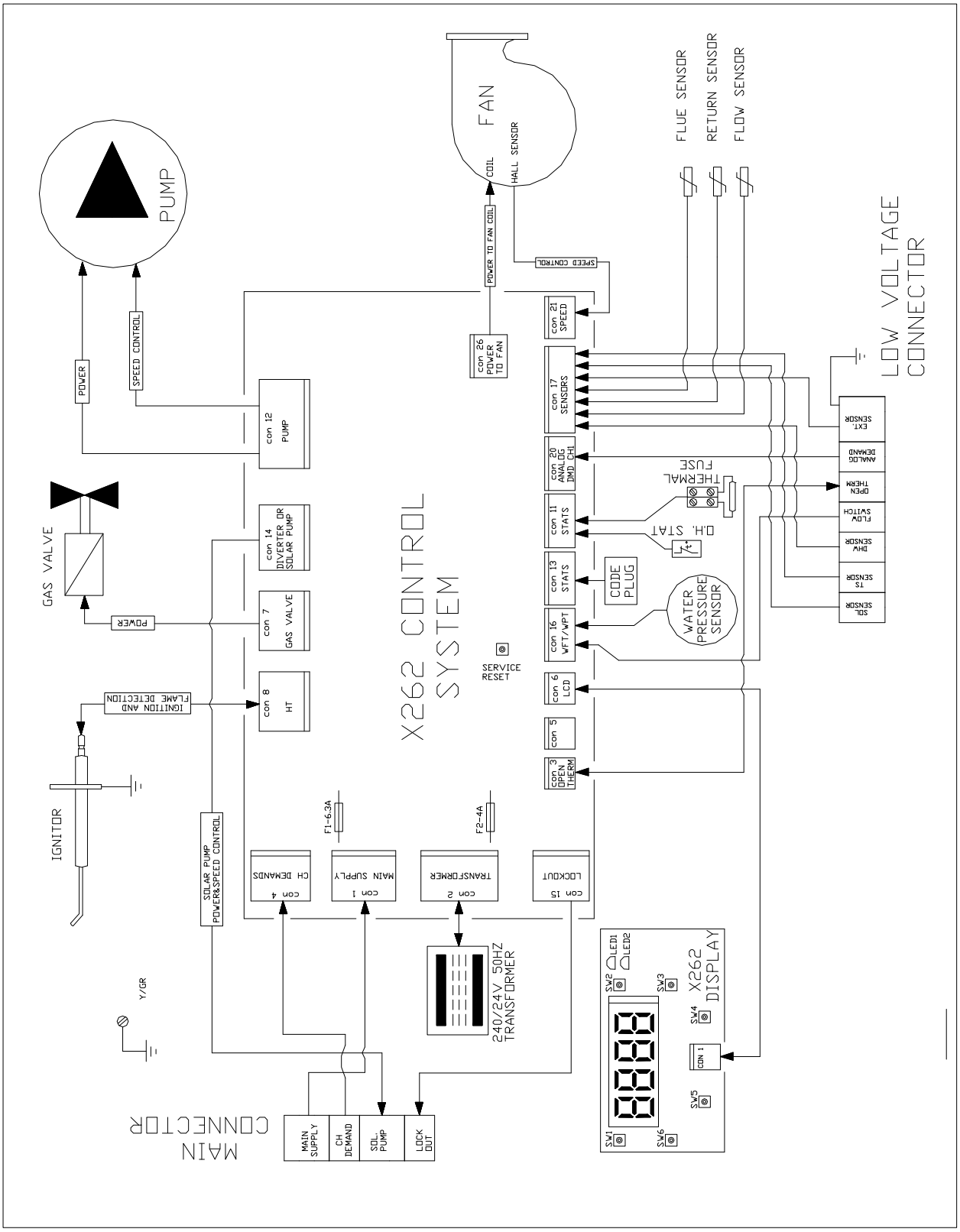

6.5 ELECTRICAL WIRING DIAGRAM

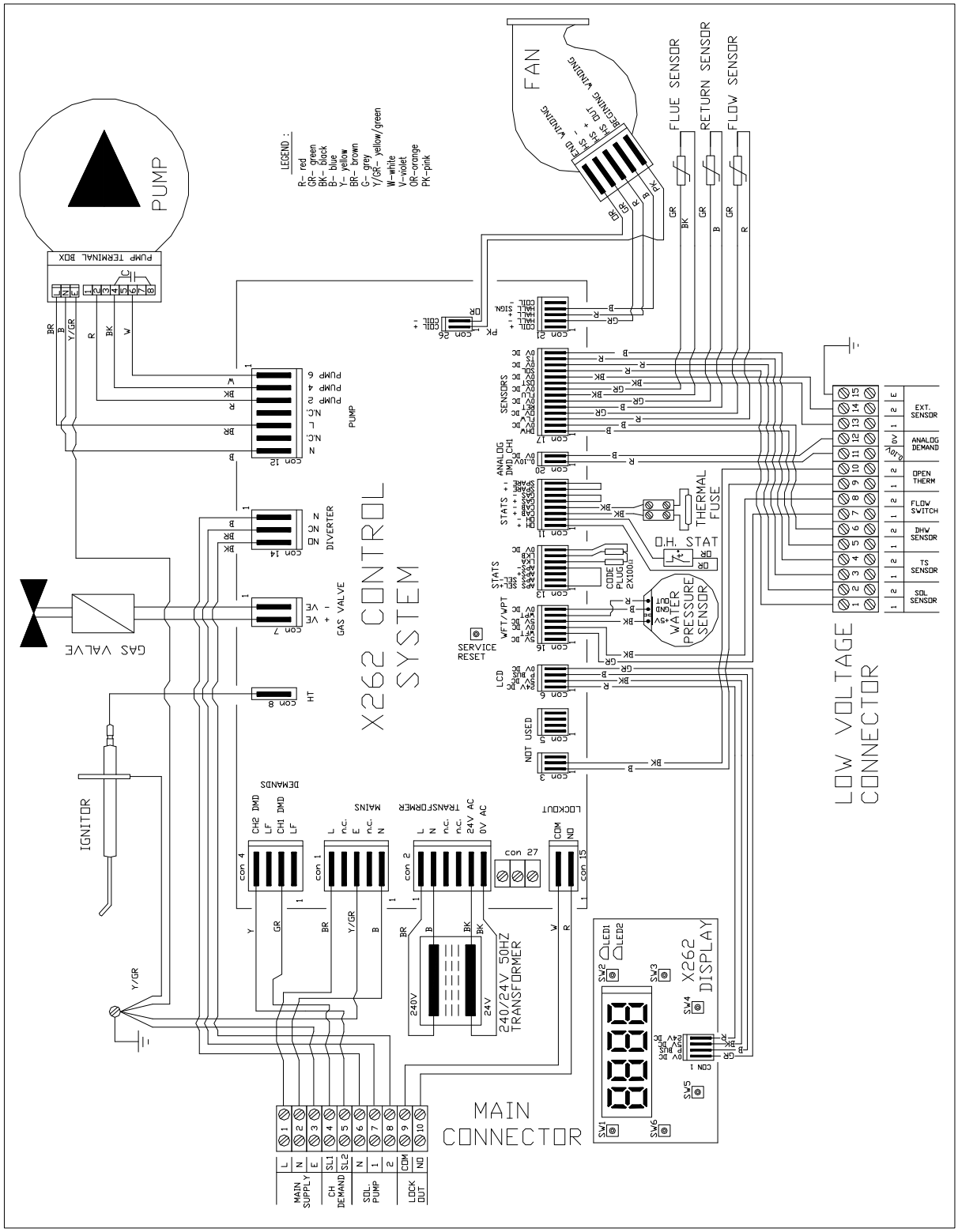

6.6 ILLUSTRATED WIRING DIAGRAM

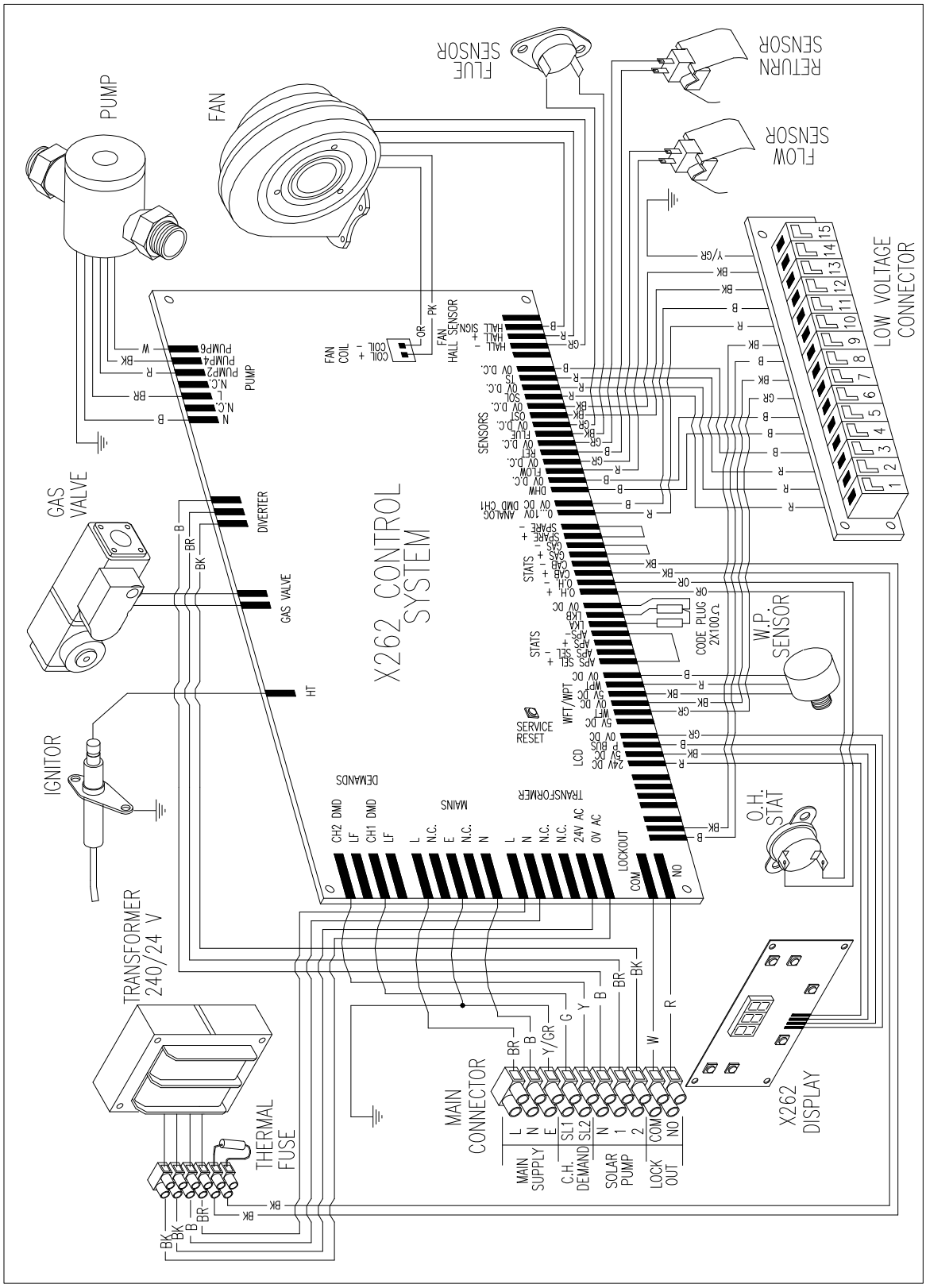

6.7 Exploded Assembly Diagrams

6.7.1 Boiler Controls Assembly

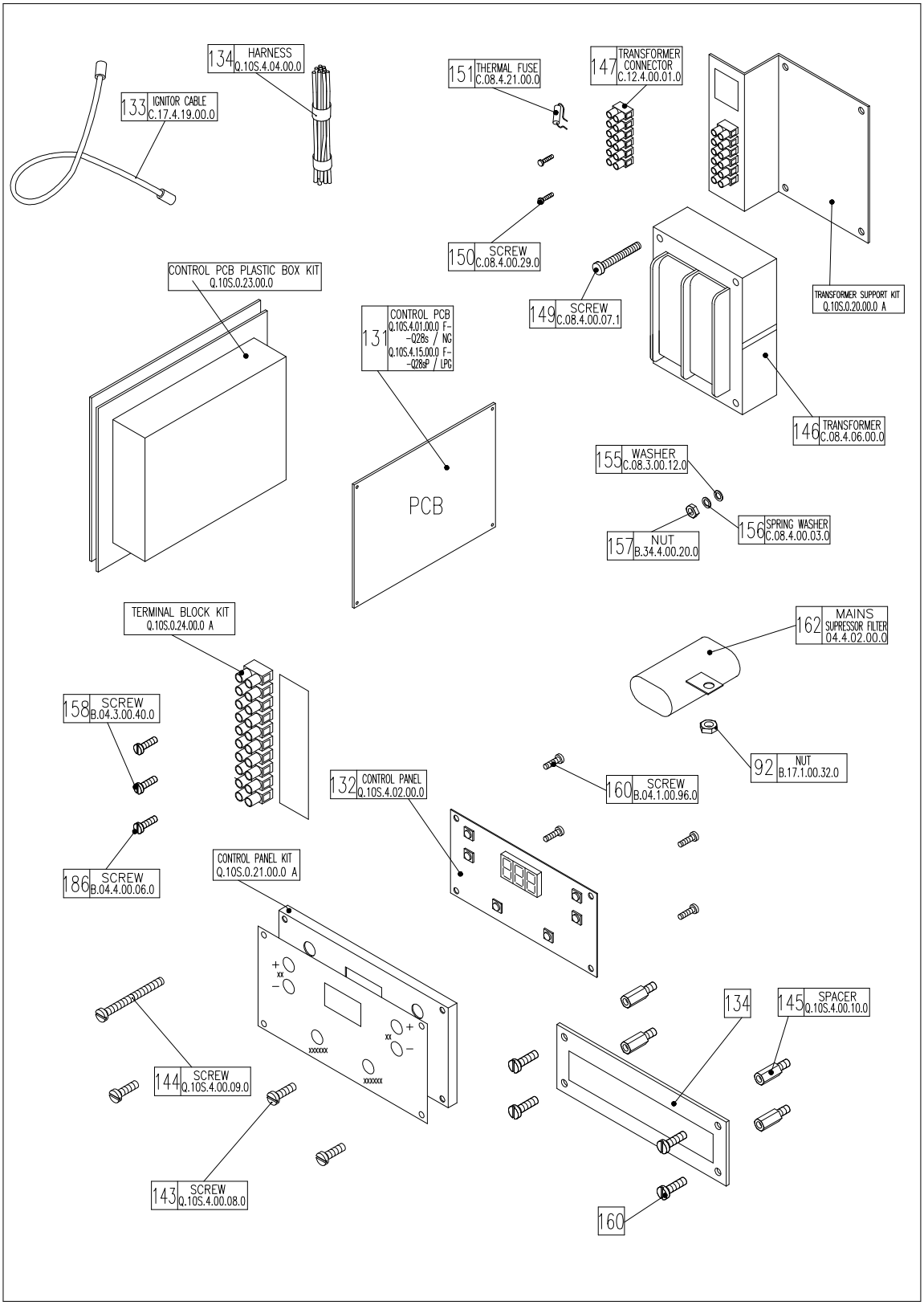

6.7.2 Waterway, Condensate & Flue Assembly

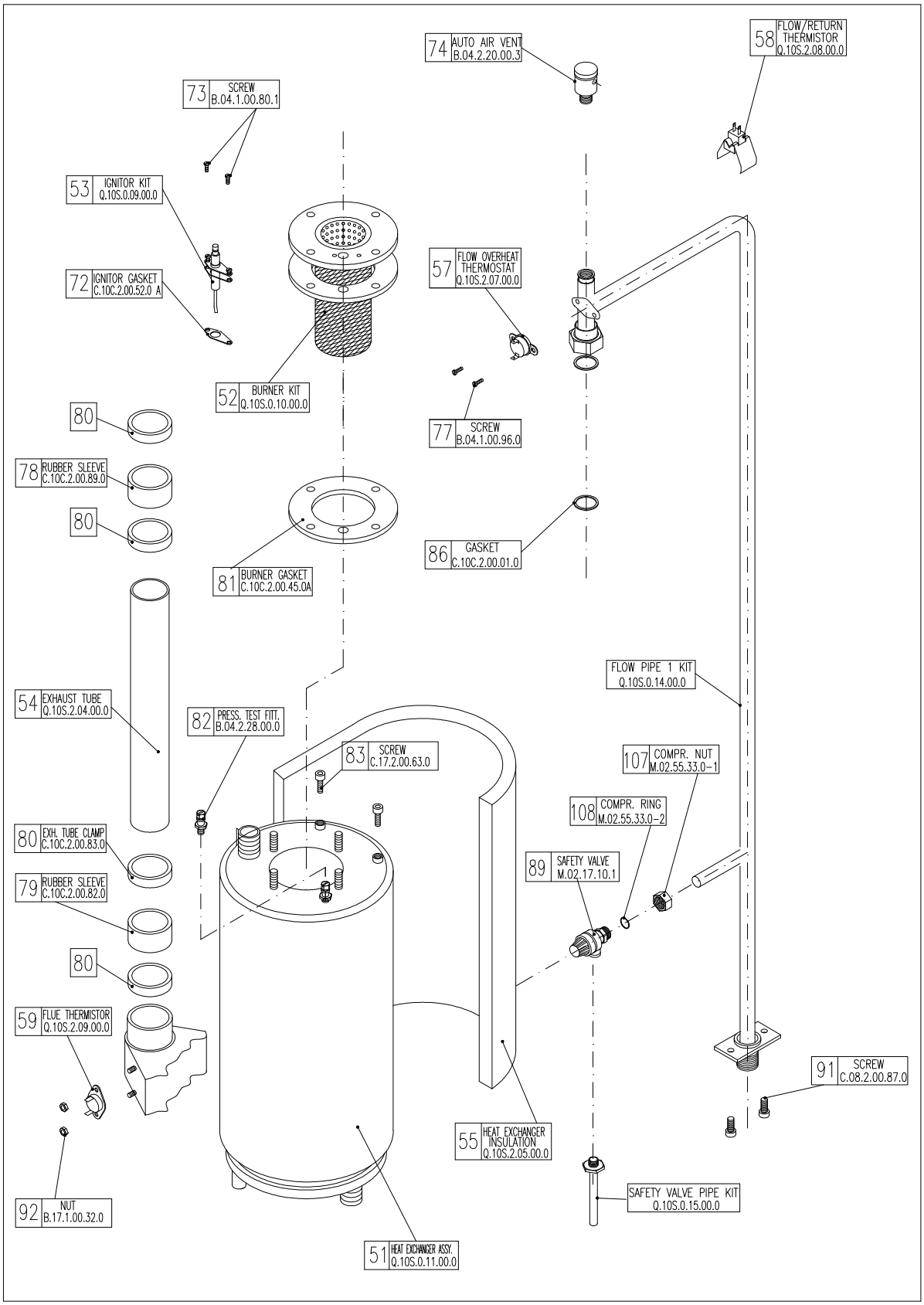

,

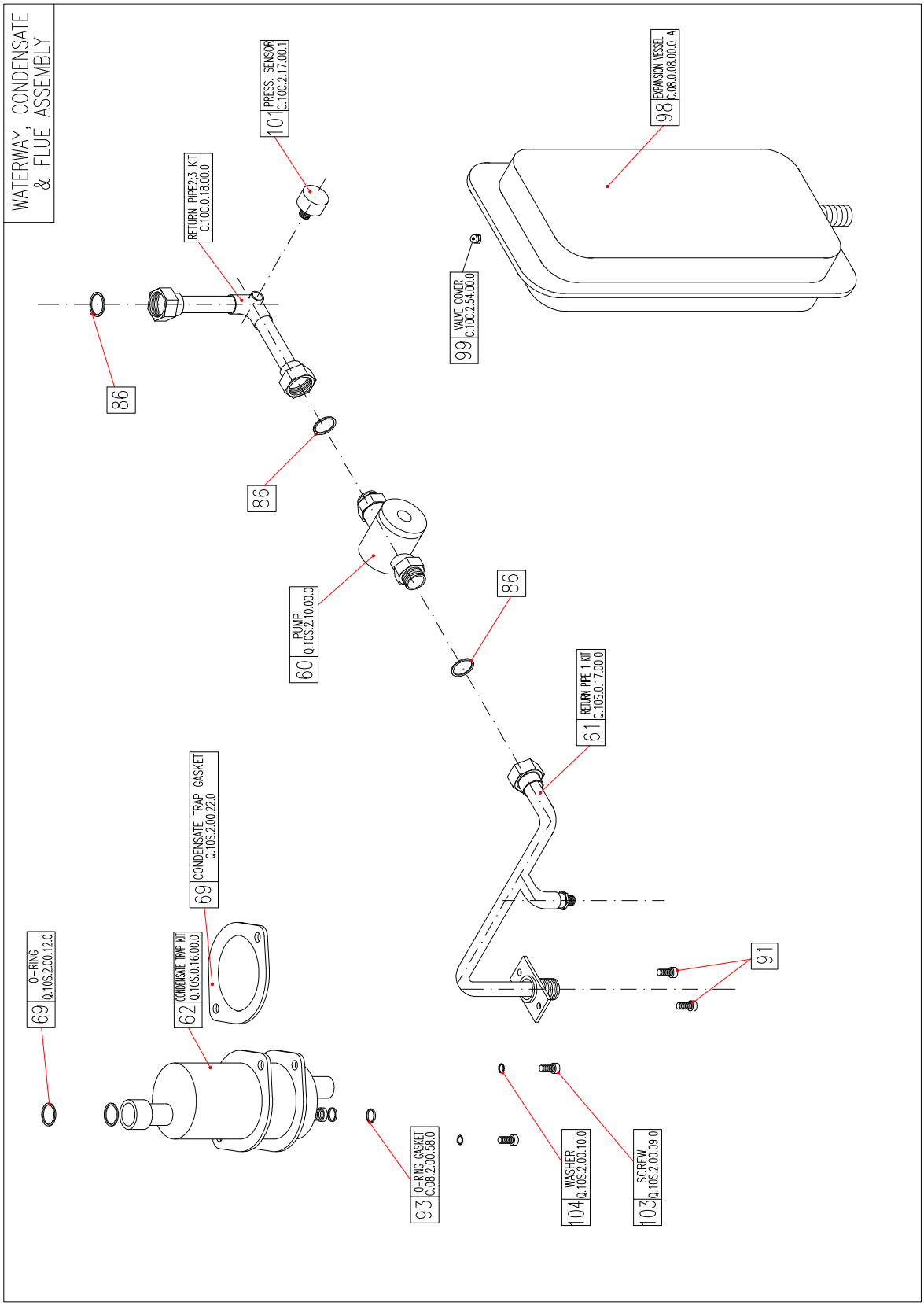
WATERWAY, CONDENSATE & FLUE ASSEMBLY
101 PRESS. SENSOR C.10C.2.17.00.1
RETURN PIPE2-3 KIT C.10C.0.18.00.0
98 EXPANSION VESSEL C.08.0.08.00.0 A
99 VALVE COVER C.10C.2.54.00.0
86
86
60 PUMP Q.10S.2.10.00.0
86
61 RETURN PIPE 1 KIT Q.10S.0.17.00.0
69 CONDENSATE TRAP GASKETT Q.10S.2.00.22.0
69 O-RING Q.10S.2.00.12.0
62 CONDENSATE TRAP KIT Q.10S.0.16.00.0
91
93 O-RING GASKET C.08.2.00.58.0
104 WASHER Q.10S.2.00.10.0
103 SCREW Q.10S.2.00.09.0

6.7.3 Air - Gas Assembly

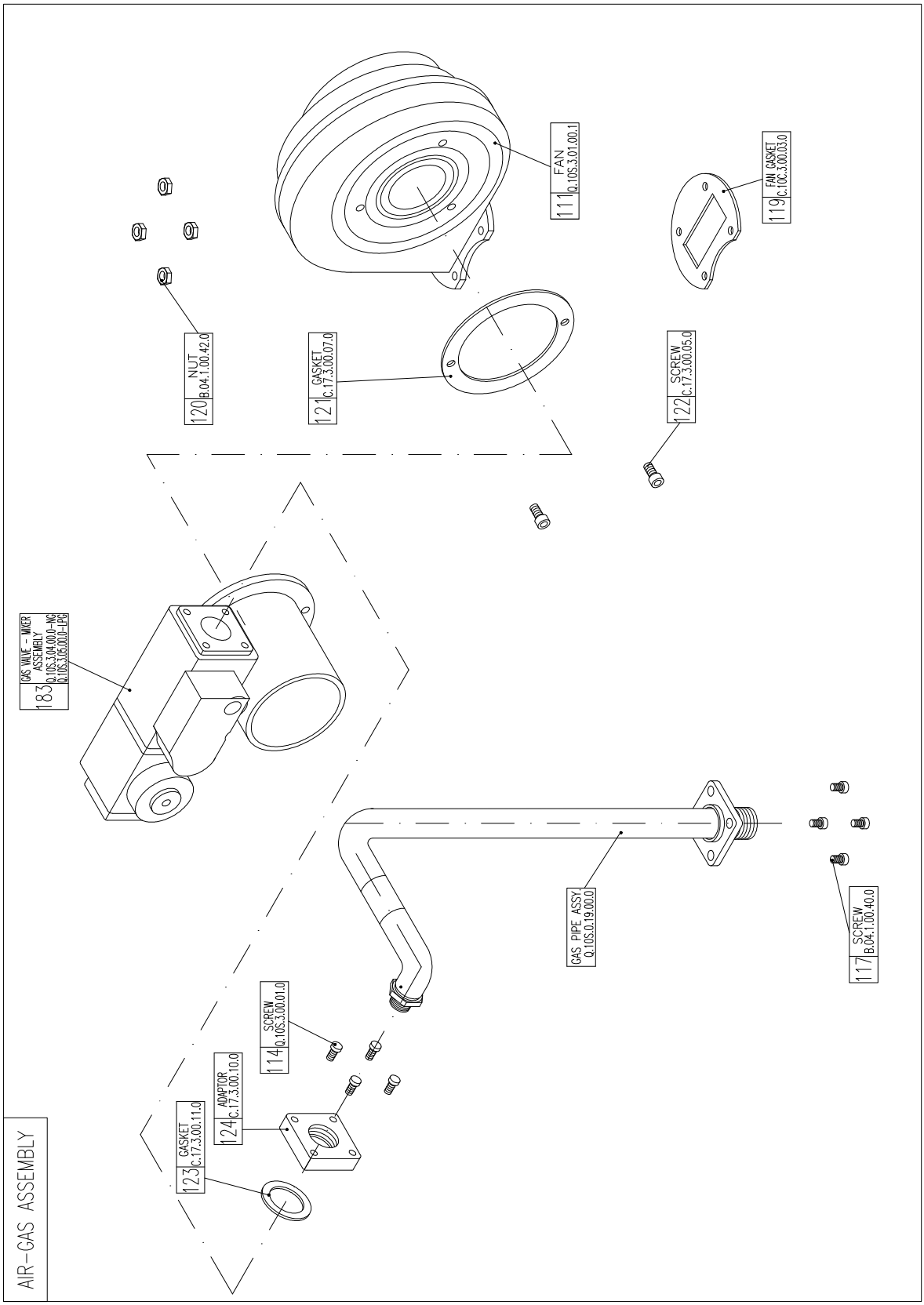

6.7.4 Casing Assembly

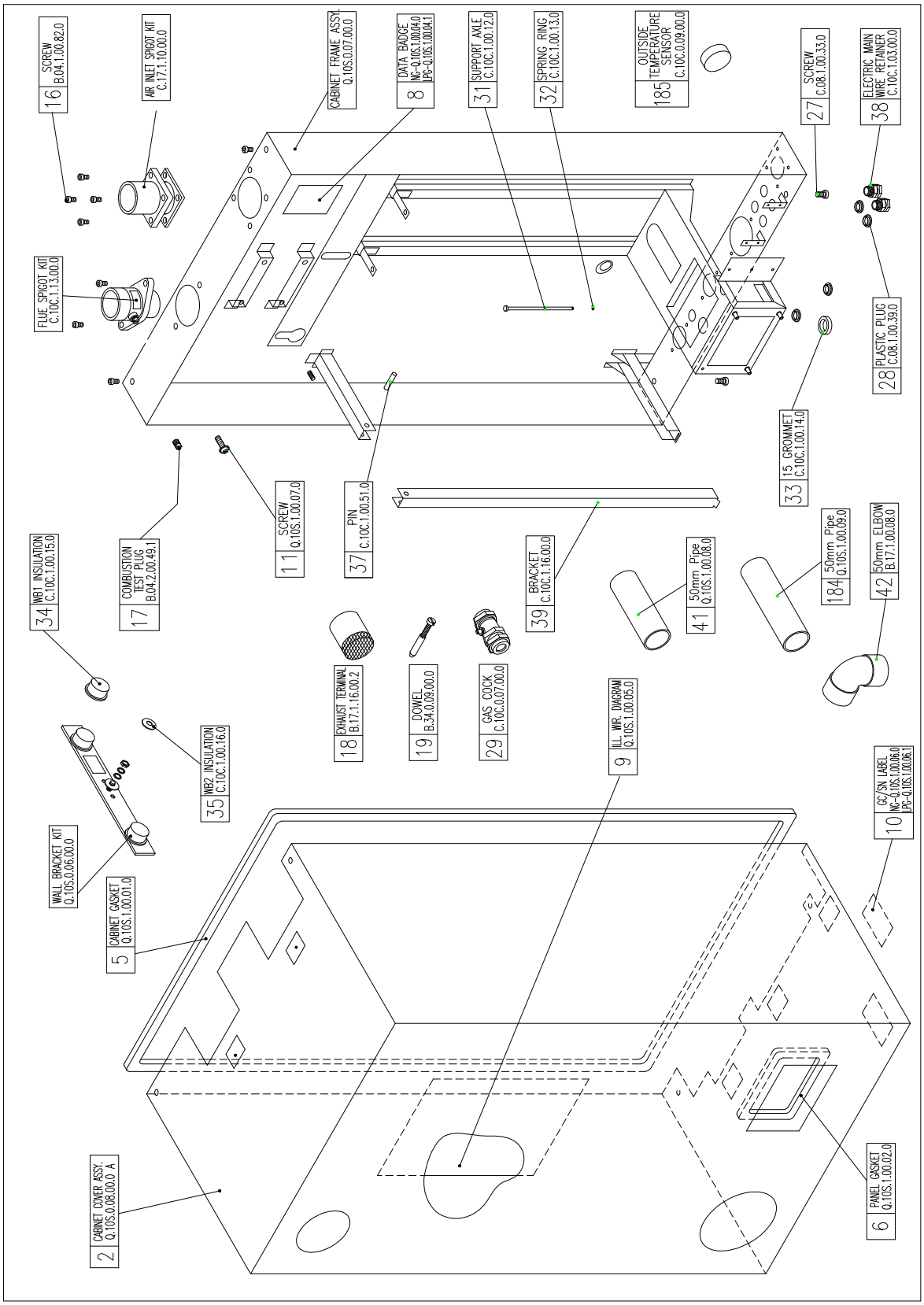

6.7.5 Exploded Diagrams Parts Reference List

Boiler Controls Assembly (Fig. 6.7.1)

GC Number	Code	Description
	131	Q28s Main Control PCB (Q.10S.4.01.00.0 F)
	131	Q28sP Main Control PCB (Q.10S.4.15.00.0 F)
	132	Control Panel (Q.10S.4.02.00.0)
E72-401	151	Thermal Fuse (C.08.4.21.00.0)
	133	Ignitor Cable (Q.10S.4.03.00.0)

Waterway, Condensate & Flue Assembly (Fig. 6.7.2)

GC Number	Code	Description
	51	Heat Exchanger Assy (Q.10S.0.11.00.0)
	98	Expansion Vessel (C.08.0.08.00.0 A)
	52	Burner Kit (Q.10S.0.10.00.0)
	81	Burner Head Gasket (C.10C.2.00.45.0 A)
	72	Ignitor Gasket (C.10C.2.00.52.0 A)
	53	Ignitor Kit (Q.10S.0.09.00.0)
	62	Condensate Trap Kit (Q.10S.0.16.00.0)
	58	Flow/Return Thermistor (Q.10S.2.08.00.0)
	59	Flue Sensor (Q.10S.2.09.00.0)
	101	Pressure Sensor (C.10C.2.17.00.1)
	57	Flow Thermostat (Q.10S.2.07.00.0)
	60	Pump (Q.10S.2.10.00.0)

Air - Gas Assembly (Fig. 6.7.3)

GC Number	Code	Description
	111	Combustion Blower (Q.10S.3.01.00.1)
	183	Q28s Gas Valve - Mixer Air Gas Assembly (Q.10S.3.04.00.0)
	183	Q28sP Gas Valve - Mixer Air Gas Assembly (Q.10S.3.05.00.0)

Casing Assembly (Fig. 6.7.4)

GC Number	Code	Description
	2	Cabinet Cover Assy (Q.10S.0.08.00.0 A)
	8	Databadge - NG (Q.10S.1.00.04.0)
	8	Databadge - LPG (Q.10S.1.00.04.1)
E73-355	17	Combustion Test Plug (B.04.2.00.49.1)

7. ROUTINE (ANNUAL) SERVICING

To ensure the continued safe and efficient operation of the boiler it is necessary to carry out routine servicing at regular intervals. Servicing must be carried out at least once per year. The frequency of the servicing will depend upon the particular operating conditions.

It is the law that any service work must be carried out by competent qualified persons.

NB: When servicing ensure that the gas and electrical supplies to the boiler are isolated before any work starts.

Hazardous materials are not used in the construction of the Qudos 28s and Qudos 28sP. However, due care should be taken when handling boiler components.
All joints should be checked for tightness after servicing and before firing the appliance.

After servicing complete the **Gas Boiler Commissioning Checklist - Service Interval Record (Chapter 10)**. **These forms (Chapter 10) should be kept in a safe place for the life of the boiler.**

7.1 Pre-Service Checks

It is recommended that an inspection should be carried out prior to shutting down the unit for servicing. Remove the front cover by removing the screws retaining the top and bottom. The following items should be observed:

a. Smooth starting and running of the blower.
b. Smooth lighting of the burner.
c. Check for leakage of gas, gas/air or combustion products.
d. Check all flexible joints and hoses for condition and soundness - replace if necessary
e. Check for condensate leaks.
f. Check for water soundness.
g. Inspect the flue vent and air intake pipework. Joints must be sound and all pipework well bracketed.
h. Check that there is a steady fall back to the boiler from the flue pipe to allow condensate to run back into the boiler.
i. With the boiler operating at a low return temperature (i.e. less than 50°C) check that the condensate flows freely from the condensate line.

7.2 Recommended Routine Service

a. Remove the outer case by first removing the securing screws at the top and bottom of the appliance.
b. Remove the burner head (Section 8.6) and inspect the burner appearance. Black markings or other discoloration's on the gauze indicate too much gas or a lack of air possibly due to a blocked air inlet. Any breakage or damage to the burner mesh indicate the burner must be replaced.
c. If necessary clean the burner with a mild household detergent and rinse under a hot running tap.
d. If necessary, from visual inspection, clean the heat exchanger using a suitable stiff plastic bristle brush, vacuum out any large particles and flush the heat exchanger with fresh water until the water flowing from the condensate drain is clear.
e. Remove the condensate trap (Section 8.8) and clean by flushing through with clean running water.
f. Check the electrode assembly mounted on the heat exchanger. If the point is damaged or burnt replace it.
Check that the spark gap measures 4 mm.

g. Replace the burner head, inspecting the gasket for damage and replacing if necessary, and reconnect the gas/air supply. Ensure the flanged gas/air supply joint is air tight.

h. Turn on the electrical supply to the boiler and allow the boiler to reach operating temperature levels.

i. Remove the combustion test point plug from the flue pipe. This is situated on the flue spigot out of the cabinet.

j. **Carry the full procedure detailed in section 5.7 COMBUSTION TESTING - MANDATORY**

k. Replace the combustion test point plug.

l. Recheck the burner pressure by following the procedure detailed in Section 4.7.

m. Check all joints for tightness up to the gas burner.

n. Complete the **Gas Boiler Commissioning Checklist - Service Interval Record (Chapter 10)**.

8. REPLACEMENT OF PARTS

CONTENTS

8.0 GENERAL
8.1 PRECAUTIONS
8.2 ACCESS
8.3 REPLACEMENT PROCEDURE
8.4 ELECTRICAL COMPONENTS
8.4.1 CONTROL PANEL
8.4.2 BOILER FLOW & RETURN THERMISTORS
8.4.3 CABINET TEMPERATURE SENSOR
8.4.4 FLUE THERMISTOR
8.4.5 PRESSURE SENSOR
8.4.6 MAIN CONTROL PCB
8.4.7 COMBUSTION BLOWER
8.4.8 GAS CONTROL VALVE
8.4.9 FLOW THERMOSTAT
8.5 SPARK IGNITION/FLAME DETECTION ELECTRODE
8.6 BURNER
8.7 HEAT EXCHANGER
8.8 CONDENSATE TRAP
8.9 PUMP
8.10 EXPANSION VESSEL

8.0 GENERAL

The following must always be carried out by a competent/qualified person.

8.1 PRECAUTIONS

i) Always switch off the mains electricity supply and disconnect the plug at the isolating switch and socket. (If a switch only is used then remove the fuse.)

ii) Gain access to the appliance (Section 8.2) and turn off the gas supply at the appliance service cock.

WARNING : Parts of the boiler internal wiring will remain live even after setting the User Controls to Standby. Shut off the power supply at the isolating switch before working on the appliance.

8.2 ACCESS

i) Remove the cabinet by removing the screws to the top and bottom of the cabinet.

8.3 REPLACEMENT PROCEDURE

i) Always replace in the reverse order unless otherwise stated.

ii) Electrical connections must be remade in accordance with the Electrical Wiring Diagram (Section 6.5).

iii) Test the tightness of any gas carrying or water carrying joint broken during the service procedures.

8.4 ELECTRICAL COMPONENTS

8.4.1 Control Panel (Fig. 6.7.1 item 132)

i) Isolate the appliance (Section 8.1)

ii) Gain access (Section 8.2)

iii) Remove the user control cover by removing the four retaining screws (Fig 6.7.1, item 143 and item 144).

iv) Disconnect the Control Panel by unplugging the cable connector.

v) Remove the Control Panel by removing the four retaining screws (Fig 6.7.1, item 160).
vi) Reassemble (Section 8.3)
vii) Check for correct operation of the Control Panel.

8.4.2 Boiler Flow and Return Thermistors (Fig. 6.7.2 - 1/2 & 2/2 item 58)

i) Isolate the appliance (Section 8.1)
ii) Gain access (Section 8.2)
iii) Remove the push on connectors from the thermistor taking note of the correct positions.
iv) Unclip the thermistor from the pipe.
v) Reassemble (Section 8.3)

NB: When fitting the new thermistor it is an advantage to smear a thin film of heat sink compound between the thermistor and pipe. This, combined with fitting the new thermistor tightly to the pipe, ensures a good contact.

8.4.3 Cabinet Temperature Sensor (Fig 6.7.1 item 151)

i) Isolate the appliance (Section 8.1)
ii) Gain access (Section 8.2)
iii) Remove the cabinet temperature sensor from the connector block by slackening the retaining screws.
iv) Reassemble (Section 8.3)

8.4.4 Flue Thermistor (Fig. 6.7.2 - 1/2 item 59)

i) Isolate the appliance (Section 8.1)
ii) Gain access (Section 8.2)
iii) Remove the push on connectors from the thermistor taking note of the correct positions.
iv) Unscrew the retaining nuts, and remove the thermistor.
v) Reassemble (Section 8.3)

NB: When fitting the new thermistor it is an advantage to smear a thin film of heat sink compound between the thermistor and plate. This, combined with fitting the new thermistor tightly to the plate, ensures a good contact.

8.4.5 Pressure Sensor (Fig. 6.7.2 - 2/2 item 101)

i) Isolate the appliance (Section 8.1)
ii) Shut off the water supply to the appliance.
iii) Gain access (Section 8.2)
iv) Drain the system to below the level of the appliance.
v) Remove the push on connector from the pressure sensor.
vi) Unscrew the pressure sensor.
vii) Reassemble (Section 8.3).

NB: Use a little jointing compound or PTFE tape on the thread.

viii) Refill the system (See Section 5 - Commissioning).

NB: When reassembling inspect the ‘o’ring (Fig 6.7.2 - 2/2, item 100) for damage and replace if necessary.

8.4.6 Main Control PCB (Fig. 6.7.1 item 131)

i) Isolate the appliance (Section 8.1)
ii) Gain access (Section 8.2)
iii) Pull off the multi-pin connectors and HT lead away from the board.
iv) Remove the plastic box cover by pulling it from support.
v) Remove the control PCB by pulling it from the four support plastic pins.
vi) Reassemble (Section 8.3)

8.4.7 Combustion Blower (Fig. 6.7.3 item 111)

i) Isolate the appliance (Section 8.1)
ii) Gain access (Section 8.2)
iii) Disconnect the connector block from the combustion blower.
iv) Unscrew the bolts (Fig 6.7.3 item 114) securing the gas inlet pipe to the gas control valve.
v) Remove the four nuts securing the combustion blower (fig. 6.7.3 item 120) outlet flange to the burner and remove the combustion blower.
vi) Reassemble (Section 8.3)

NB: When reassembling inspect any gaskets for damage and replace if necessary.

8.4.8 Gas Control Valve /Venturi Assembly (Fig. 6.7.3 item 183)

i) Isolate the appliance (Section 8.1)
ii) Gain access (Section 8.2)
iii) Remove the push on connector block to the gas valve.
iv) Unscrew the bolts (Fig 6.7.3 item 114) securing the gas inlet pipe to the gas control valve.
v) Unscrew the bolts securing the gas valve (Fig 6.7.3 item 122) to the inlet port of the combustion blower.
vi) Remove the gas valve/venturi assembly as a complete unit.
vii) Unscrewing the union fitting from the gas valve.
viii) Reassemble (Section 8.3)
ix) Check the gas rate and combustion (See Section 5 - Commissioning)

NB: Always change the gas valve/venturi assembly together. This assembly is factory preset but must be checked using the procedure set out in Section 5.7 (Combustion testing).

8.4.9 Flow Thermostat (Fig. 6.7.2 - 1/2 item 57)

i) Isolate the appliance (Section 8.1)
ii) Gain access (Section 8.2)
iii) Remove the push on connector from the sensor taking note of the correct position.
iv) Unscrew the bolts securing the stat (Fig 6.7.2 - 1/2 item 77)
v) Reassemble (Section 8.3)

NB: When fitting the new thermostat it is an advantage to smear a thin film of heat sink compound between the thermistor and pipe. This, combined with fitting the new thermistor tightly to the pipe, ensures a good contact.

8.5 SPARK IGNITION/FLAME DETECTION ELECTRODE (Fig. 6.7.2 - 1/2 item 53)

i) Isolate the appliance (Section 8.1)
ii) Gain access (Section 8.2)
iii) Remove the pull off HT lead to the spark ignition electrode.
iv) Undo the screws to the spark ignition electrode flange located on the heat exchanger top panel (Fig 6.7.2 - 1/2 item 73) and withdraw the spark ignition electrode.
v) Reassemble (Section 8.3)

NB: When reassembling inspect the gasket for damage and replace if necessary. With the new spark ignition electrode in place it is essential to ensure the gap between the tip of the electrode and the burner surface is 4 mm. Distances above or below 4 mm will affect ignition performance. If necessary gently bend the electrode taking care not to damage the ceramic insulator.

8.6 BURNER (Fig. 6.7.2 - 1/2 items 52)

i) Isolate the appliance (Section 8.1)
ii) Gain access (Section 8.2)
iii) Remove the combustion blower (Section 8.4.7)

iv) Remove the 4 nuts fixing the burner to the top of the heat exchanger (Fig 6.7.3, item 120).
v) Remove the spark ignition/flame detection electrode (Section 8.5)
vi) Withdraw the burner from the top of the heat exchanger.
vii) Reassemble (Section 8.3)
NB: When reassembling inspect any gaskets for damage and replace if necessary.

8.7 HEAT EXCHANGER (Fig. 6.7.2 - 1/2 item 51)

i) Isolate the appliance (Section 8.1)
ii) Gain access (Section 8.2)
iii) Shut off the water supply to the appliance.
iv) Remove the burner (Section 8.6)
v) Drain the system to below the level of the appliance.
vi) Remove the flue thermistor (Section 8.4.4)
vii) Remove the spark ignition/flame detection electrode (Section 8.5)
viii) Remove the flue connection by slackening the retaining strap and pulling the flue off the heat exchanger spigot.
ix) Remove the condensate trap (Section 8.8)
x) Disconnect the flow and return pipe union nuts (Fig 6.7.2 - 1/2 & Fig. 6.7.2 - 2/2 item 85) from the heat exchanger.
xi) Remove the two screws (Fig. 6.7.2 - 1/2 item 83) fixing the heat exchanger to the top.
xii) Remove the heat exchanger
xiii) Reassemble (Section 8.3)
xiv) Recommission (Section 5 - Commissioning)

8.8 CONDENSATE TRAP (Fig. 6.7.2 - 2/2 item 62)

i) Isolate the appliance (Section 8.1)
ii) Gain access (Section 8.2)
Remove the two screws and washers (Fig. 6.7.2 - 2/2 item 103 and 104) fixing the condensate trap to the base of the cabinet.
iii) Disconnect the condense line from the projection of the condensate trap from the base of the cabinet.
iv) Withdraw the condensate trap.
v) Mop up any spilled condensate.
vi) Reassemble (Section 8.3)
NB: When reassembling inspect the o-ring (Fig 6.7.2 - 2/2, item 69) for damage and replace if necessary. When re-fitting the condensate trap pour water until nearly full. Then reconnect the condensate trap to the base of the heat exchanger.

8.9 PUMP (Fig. 6.7.2 - 2/2 item 60)

i) Isolate the appliance (Section 8.1)
ii) Gain Access (section 8.2)
iii) Isolate the waterways to the boiler using the system isolation valves.
iv) Drain the system to below the level of the appliance.
v) Undo the screw (Fig. 6.7.1 item 144) to the panel support (Fig. 6.7.4 - item 4) and rotate it on the right.
vi) Disconnect the pump electrical cable from the connections box of the pump head taking note of the correct position.
vii) Remove the four allen bolts securing the pump head to the hydroblock back body.
viii) Remove the pump head.
ix) Reassemble (Section 8.3)

8.10 EXPANSION VESSEL (Fig. 6.7.2 - 2/2 item 98)

i) Isolate the appliance (Section 8.1)
ii) Gain Access (section 8.2)
iii) Isolate the waterways to the pump using the system isolation valves.
iv) Drain the system to below the level of the appliance.

v) Disconnect the flexible hose (Fig. 6.7.2 - 2/2 item 95) from the expansion vessel.
vi) Undo the pin (Fig. 6.7.4 - item 37) and the EV bracket (Fig. 6.7.4 - item 39) from the cabinet frame.
vii) Remove the expansion vessel**.**
viii) Reassemble (Section 8.3)
NB: When reassembling inspect the gasket for damage and replace if necessary.

9. SHORT SPARE PARTS LIST

Item	GC No	Part Denomination	Item	GC No	Part Denomination
52		Burner Kit	81		Burner Gasket

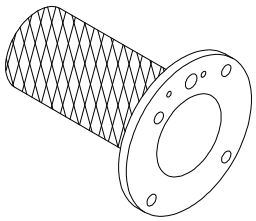

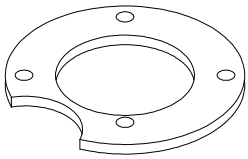

72		Ignitor Gasket	53		Ignitor Kit

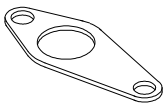

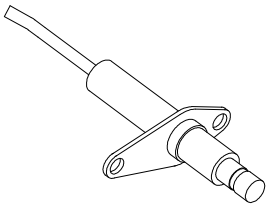

58		Flow/Return Thermistors	59		Flue Thermistor

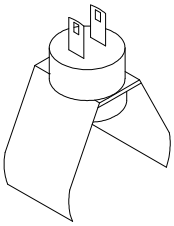

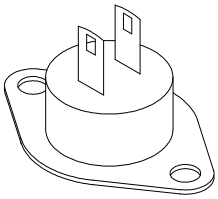

57		Flow Overheat Thermostat	101		Pressure Sensor

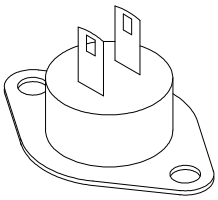

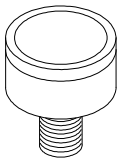

183 Q28s Gas Valve - Mixer Assem.
Q28sP Gas Valve - Mixer Assem.

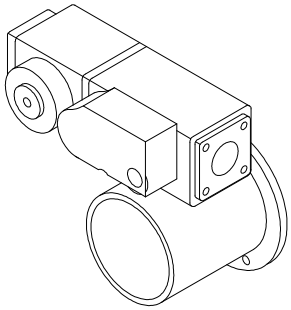

119 Fan

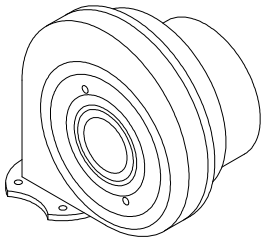

132 Control Panel

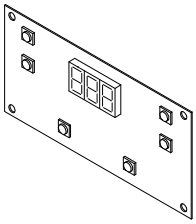

131 Q28s Control PCB
Q28sP Con. PCB

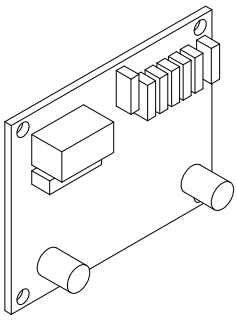

60 Pump

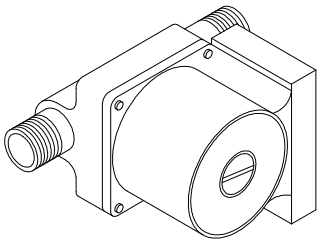

98 Expansion Vessel

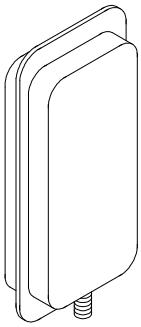

SHORT SPARE PARTS LIST FOR THE KESTON CONDENSING BOILER RANGE

Item	GC No	Part Denomination
52		Burner Kit
81		Burner Gasket
53		Ignitor Kit
72		Ignitor Gasket
58		Flow/Return Thermistor
59		Flue Thermistor
57		Flow Thermostat
101		Pressure Sensor
111		Fan
183		Gas Valve - Mixer Air-Gas Assembly (NG-Q28s)
183		Gas Valve - Mixer Air-Gas Assembly (LPG-Q28sP)
132		Control Panel
131		Control PCB (NG-Q28s)
131		Control PCB (LPG-Q28sP)
60		Pump
98		Expansion Vessel

10. GAS BOILER COMMISSIONING CHECKLIST

BENCHMARK No. | | | | | | | |

benchmark™

GAS BOILER COMMISSIONING CHECKLIST

BOILER SERIAL No. _____ ***NOTIFICATION No.*** _____

CONTROLS ***To comply with the Building Regulation, each section must have a tick in one or other of the boxes***

TIME & TEMPERATURE CONTROL TO HEATING	ROOM T/STAT & PROGRAMMER/TIMER	☐	PROGRAMMABLE ROOMSTAT	☐
TIME & TEMPERATURE CONTROL TO HOT WATER	CYLINDER T/STAT & PROGRAMMER/TIMER	☐	COMBI BOILER	☐
HEATING ZONE VALVES	FITTED	☐	NOT REQUIRED	☐
HOT WATER ZONE VALVES	FITTED	☐	NOT REQUIRED	☐
THERMOSTATIC RADIATOR VALVES	FITTED	☐		
AUTOMATIC BYPASS TO SYSTEM	FITTED	☐	NOT REQUIRED	☐

FOR ALL BOILERS CONFIRM THE FOLLOWING

THE SYSTEM HAS BEEN FLUSHED IN ACCORDANCE WITH THE BOILER MANUFACTURER'S INSTRUCTIONS ?	☐
THE SYSTEM CLEANER USED	
THE INHIBITOR USED	

FOR THE CENTRAL HEATING MODE, MEASURE & RECORD

GAS RATE	☐	m^3/hr	☐	ft^3/hr
BURNER OPERATING PRESSURE (IF APPLICABLE)	☐	N/A	☐	mbar
CENTRAL HEATING FLOW TEMPERATURE			☐	^{0}C
CENTRAL HEATING RETURN TEMPERATURE			☐	^{0}C

FOR COMBINATION BOILERS ONLY

HAS A WATER SCALE REDUCER BEEN FITTED ?	YES	☐	NO	☐
WHAT TYPE OF SCALE REDUCER HAS BEEN FITTED ?				

FOR THE DOMESTIC HOT WATER MODE, MEASURE & RECORD

GAS RATE	☐	m^3/hr	☐	ft^3/hr
MAXIMUM BURNER OPERATING PRESSURE (IF APPLICABLE)	☐	N/A	☐	mbar
COLD WATER INLET TEMPERATURE			☐	^{0}C
HOT WATER OUTLET TEMPERATURE			☐	^{0}C
WATER FLOW RATE			☐	lts/min

FOR CONDENSING BOILERS ONLY CONFIRM THE FOLLOWING

THE CONDENSATE DRAIN HAS BEEN INSTALLED IN ACCORDANCE WITH THE MANUFACTURER'S INSTRUCTIONS ?	YES ☐

FOR ALL INSTALLATIONS CONFIRM THE FOLLOWING

THE HEATING AND HOT WATER SYSTEM COMPLIES WITH CURRENT BUIDING REGULATIONS					☐
THE APPLIANCE AND ASSOCIATED EQUIPMENT HAS BEEN INSTALLED AND COMISSIONED IN ACCORDANCE WITH THE MANUFACTURER'S INSTRUCTIONS					☐
IF REQUIRED BY THE MANUFACTURER, HAVE YOU RECORDE A CO/CO_2 RATIO READING?	N/A	☐	YES	☐	CO/CO_2 RATIO
THE OPERATION OF THE APPLIANCE AND SYSTEM CONTROLS HAVE BEEN DEMONSTRATED TO THE CUSTOMER					☐
THE MANUFACTURER'S LITERATURE HAS BEEN LEFT WITH THE CUSTOMER					☐

SERVICE INTERVAL RECORD

It is recommended that your heating system is serviced regularly
and that you complete the appropriate Service Interval Record Below

Service Provider. Before completing the appropriate Service Interval Record below, please ensure you have carried out the service as described in the boiler manufacturer's instructions. Always use the manufacturer's specified spare part when replacing all controls

SERVICE 1 DATE
ENGINEER NAME
COMPANY NAME
TEL No.
GAS SAFE REGISTER ID CARD SERIAL No.
COMMENTS

SIGNATURE

SERVICE 2 DATE
ENGINEER NAME
COMPANY NAME
TEL No.
GAS SAFE REGISTER ID CARD SERIAL No.
COMMENTS

SIGNATURE

SERVICE 3 DATE
ENGINEER NAME
COMPANY NAME
TEL No.
GAS SAFE REGISTER ID CARD SERIAL No.
COMMENTS

SIGNATURE

SERVICE 4 DATE
ENGINEER NAME
COMPANY NAME
TEL No.
GAS SAFE REGISTER ID CARD SERIAL No.
COMMENTS

SIGNATURE

SERVICE 5 DATE
ENGINEER NAME
COMPANY NAME
TEL No.
GAS SAFE REGISTER ID CARD SERIAL No.
COMMENTS

SIGNATURE

SERVICE 6 DATE
ENGINEER NAME
COMPANY NAME
TEL No.
GAS SAFE REGISTER ID CARD SERIAL No.
COMMENTS

SIGNATURE

SERVICE 7 DATE
ENGINEER NAME
COMPANY NAME
TEL No.
GAS SAFE REGISTER ID CARD SERIAL No.
COMMENTS

SIGNATURE

SERVICE 8 DATE
ENGINEER NAME
COMPANY NAME
TEL No.
GAS SAFE REGISTER ID CARD SERIAL No.
COMMENTS

SIGNATURE

SERVICE 9 DATE
ENGINEER NAME
COMPANY NAME
TEL No.
GAS SAFE REGISTER ID CARD SERIAL No.
COMMENTS

SIGNATURE

SERVICE 10 DATE
ENGINEER NAME
COMPANY NAME
TEL No.
GAS SAFE REGISTER ID CARD SERIAL No.
COMMENTS

SIGNATURE

KESTON CONDENSING BOILERS
IMPORTANT
Qudos 28s and Qudos 28sP
INSTALLATION KEY POINTS

- ☑ *Read Installation Manual Carefully*
- ☑ *Ensure that ALL dust particles, filings , plastic chips etc. are removed from the inlet pipe.*
- ☑ *If the installation is a replacement the system must be flushed clean. System should be drained hot, then refilled, then drained again until the water is clean.*
- ☑ *Ensure that there is a proper electrical supply i.e. 230V fused at 3A for the permanent live.*
- ☑ *Take great care with pipe connections to ensure that no damage is done to the internal pipework.*
- ☑ *Ensure that the 22mm condensate pipe is not exposed to freezing conditions.*
- ☑ *Make sure that the exhaust pipe terminates away from windows or vents and is out of reach.*
- ☑ *Make sure that the air inlet and exhaust pipe outlets are at least 200mm apart.*
- ☑ *Check tightness of all connections in the boiler before firing.*
- ☑ *Ensure that the terminals supplied are fitted to both the exhaust and air inlet pipes.*
- ☑ *The system must be free from air before firing.*
- ☑ *If TRV's are installed on radiators ensure that a bypass is installed to maintain required flow.*
- ☑ *Complete the **Gas Boiler Commissioning Checklist - Service Interval Record (Chapter 10)**.*
- ☑ *Complete the combustion testing (Section 5.7) using a calibrated flue gas analyser.*