Keston

Heat 45 & 55

Installation and Servicing Instructions

FAN POWERED HIGH EFFICIENCY
MODULATING DOMESTIC CONDENSING
GAS COMBINATION BOILER

CE/PI No. 86-CN-69
Heat 45 - GC No. 41-930-40
Heat 55 - GC No. 41-930-41

CE

These instructions must be left either with the user or next to the site gas meter.

Keston Heating
PO Box 103, National Avenue, Kingston Upon Hull, HU5 4JN
Tel. +44 (0) 1482 443005 Fax. +44 (0) 1482 467133
email : info@keston.co.uk web : www.keston.co.uk

COMPLIANT WITH BUILDING REGULATION PART L1 & L2

SEDBUK A RATED

benchmark

spares & parts online IBASIS.CO.UK

Table 1 Performance Data (Natural Gas)

Keston Heat Model			45	55
Boiler Output (non-condensing) Mean 70°C	Max	kW	42.6	52.1
		Btu/hr	145400	177800
	Min	kW	12	12
		Btu/hr	40900	40900
Boiler Output (condensing) Mean 40°C	Max	kW	45	55
		Btu/hr	153500	187700
	Min	kW	12.7	12.7
		Btu/hr	43300	43300
Boiler Input Max Rate	Nett	kW	43.2	52.7
		Btu/hr	147400	179800
	Gross	kW	47.9	58.5
		Btu/hr	163400	199600
Boiler Input Min Rate	Nett	kW	12.2	12.2
		Btu/hr	41600	41600
	Gross	kW	13.5	13.5
		Btu/hr	46100	46100
Gas Rate	Max Rate	m^3/hr	4.56	5.57
		ft^3/hr	161.2	196.9
Flue Gas Flow Rate	Max Rate	m^3/hr	66.4	81.0
		ft^3/hr	2343	2861
CO_2 (±0.5%)	Max Rate	%	9.3	9.5
	Min Rate	%	8.4	8.4
NO_x	Weighted	mg/kWh	38.6	38.3
		ppm DAF	21.9	21.7
Efficiency	Seasonal	%	96.0	96.7
	*SEDBUK 2009	%	89.2	89.6

Table 2 General Data

Keston Heat Model		45	55
Gas Supply		2H – G20 – 20mbar / 3P - G31 - 37mbar	
Gas Supply Connection		G 3/4	
Flow Connection		G1 1/4	
Return Connection		G1 1/4	
Max Pressure (sealed sys)	Bar (psi)	4.0 (58)	
Maximum Static Head	m	40.7	
Electricity Supply		230V - 50Hz	
Fuse Rating	A	4.0	
Power Consumption	W	202	262
IP Rating		IP20	
Nominal flue dia - Concent.		Twin 50mm	
Condensate Drain		25	
Water Content	L	3.0	
Dry Weight	Kg	49	

** The value is used in the UK Government's Standard Assessment Procedure (SAP) for energy ratings of dwellings. The test data from which it has been calculated have been certified by a notified body.*

Note.

Natural gas consumption is calculated using a calorific value of 37.8MJ/m^3 (1038Btu/ft^3) gross or 34 MJ/m^3 (910 Btu/ft^3) nett at 15°C and 1013.25 mbar.

a. *For l/s divide the gross heat input (kW) by the gross C.V. of the gas (MJ/m^3)*

b. *For ft/h^3 divide the gross heat input (Btu/h) by the gross C.V. of the gas (Btu/ft^3).*

c. *For m^3/h multiply l/s by 3.6.*

HEALTH & SAFETY DOCUMENT NO. 635

The electricity at work regulations, 1989. The manufacturer's notes must NOT be taken, in any way, as overriding statutory obligations.

IMPORTANT. These appliances are CE certified for safety and performance. It is, therefore, important that no external control devices, e.g. flue dampers, economisers etc., are directly connected to these appliances unless covered by these Installation and Servicing Instructions or as otherwise recommended by **Keston** in writing. If in doubt please enquire.

Any direct connection of a control device not approved by **Keston** could invalidate the certification and the normal appliance warranty. It could also infringe the Gas Safety Regulations and the above regulations.

Keston Heat

45 & 55

Natural Gas
Destination Countries: GB, IE, RO

Boiler size	G.C. Appliance No. (Benchmark No.)	PI No.
45	41-930-40	86-CN-69
55	41-930-41	86-CN-69

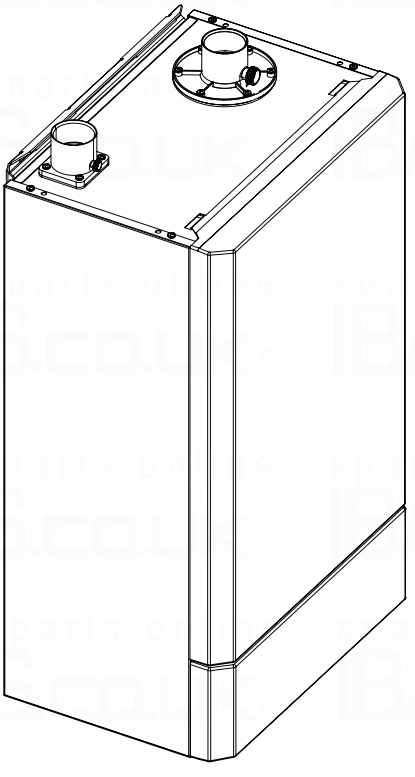

CONTENTS

Boiler Assembly - Exploded view. 9
Boiler Clearances. 7
Commissioning and Testing....38
Electrical Connections. 23
Electrical Supply. 6
Fault Finding. 49
Flue Installation. 5
Gas Safety Regulations 4
Gas Supply. 5
Introduction....4
Initial Lighting. 39
Installer Connections. 24
Installation....9-40
Mounting Boiler. 12
Option Kits. 4
Performance Data. 2
Servicing. 41-48
Short List of Parts. 59
Ventilation. 12
Water Circulation. 5
Water Connections. 22
Water System Requirements. 8
Water Treatment. 6
Wiring Diagrams. 25

Key to symbols

IE =	Ireland,
GB =	United Kingdom (Countries of destination)
RO =	Romania
PMS =	Maximum operating pressure of water
C53 =	A room sealed boiler which is connected via its separate ducts to two terminals that may terminate in zones of different pressure.
C13 =	A room sealed boiler which is connected via its ducts to a horizontally installed terminals that terminate within a common pressure zone
I2H =	An appliance designed for use on 2nd Family gases.

NOTE TO THE INSTALLER: LEAVE THESE INSTRUCTIONS ADJACENT TO THE GAS METER.

INTRODUCTION

The Keston Heat boilers are fully automatically controlled, wall mounted, fanned, super efficient condensing appliances.

The Keston Heat condensing boilers can be installed either on the wall or into a prefabricated floor mounted frame.

Through a sophisticated control system combined with premix burner arrangement the boilers are capable of high seasonal efficiencies of >96% and low emissions.

These boilers are certified to meet the requirements of the EC Gas Appliance Directive, Boiler Efficiency Directive, EMC and Low Voltage Directive.

Note. *These boilers cannot be used on systems that include gravity circulation.*

The boiler are suitable for connection to fully pumped, open vented or sealed water systems. Adequate arrangements for completely draining the system by provision of drain cocks MUST be provided in the installation pipework.

Boiler is suppled with internal pump

OPTIONAL EXTRA KITS

- Air Terminal Finishing Kit
- Programmable Room Thermostat Kit
- Modulating Sequencer Kit
- Tank Sensor Kit
- Safety Interlock Kit
- Flue Sleeve Kit
- Room Sensor Kit

SAFETY

Current Gas Safety (Installation and Use) Regulations or rules in force

The appliance is suitable only for installation in GB and IE and should be installed in accordance with the rules in force.

In GB, the installation must be carried out by a Gas Safe Registered Engineer or in IE by a competent person. It must be carried out in accordance with the relevant requirements of the:

- Gas Safety (Installation and Use) Regulations
- The appropriate Building Regulations either The Building Regulations, The Building Regulations (Scotland), Building Regulations (Northern Ireland).
- The Water Fittings Regulations or Water byelaws in Scotland.
- The Current I.E.T. Wiring Regulations.

Where no specific instructions are given, reference should be made to the relevant British Standard Code of Practice.

In IE, the installation must be carried out by a Competent Person and installed in accordance with the current edition of I.S.813 “Domestic Gas Installations” or I.S. 820 “Non-Domestic Gas Installations” as appropriate, the current Building Regulations and reference should be made to the current ETCI rules for electrical installation.

The Keston Heat boilers have been tested and certified to;

EN 483, EN 677, BSEN 60335-2-102, BSEN 55014-1 and BSEN 55014-2 for use with Natural Gas.

Detailed recommendations are contained in the following Codes of Practice:

BS. 6891	Installation of low pressure gas pipework of up to 28mm (R1) in domestic premises (2nd family gas).
BS. 5440	Inst. and maintenance of flues and ventilation for gas appliances of rated input not exceeding 70kW net (1st, 2nd and 3rd family gases).
Part 1	Specification for installation of flues.
Part 2	Specification for installation and maintenance of ventilation for gas appliances.
BS. 6798	Installation and maintenance of gas fired hot water boilers of rated input not exceeding 70kW net.
BS. 6880	Low temperature hot water heating systems of output greater than 45kW.
Part 1	Fundamental and design considerations.
Part 2	Selection of equipment.
Part 3	Installation, commissioning and maintenance.
BSEN.12828:2003	Heating Systems in buildings: Design for water based systems.
BSEN.12831:2003	Heating Systems in buildings: Method for calculation of the design heat load.
BSEN.13831	Specification for: Expansion vessels using an internal diaphragm, for sealed hot water heating systems.
BSEN.14336:2004	Heating Systems in buildings: Installation and commissioning of water based heating systems.

Where reference is made throughout these instructions I.S.813:2002 “Domestic Gas Installations” reference should also be made to I.S.820:2000 “Non-Domestic Gas Installations” as applicable.

SAFE HANDLING

This boiler may require 2 or more operatives to move it to its installation site, remove it from its packaging base and during movement into its installation location. Manoeuvring the boiler may include the use of a sack truck and involve lifting, pushing and pulling.

Caution should be exercised during these operations.

Operatives should be knowledgeable in handling techniques when performing these tasks and the following precautions should be considered:

- Grip the boiler at the base.
- Be physically capable.
- Use personal protective equipment as appropriate, e.g. gloves, safety footwear.

During all manoeuvres and handling actions, every attempt should be made to ensure the following unless unavoidable and/or the weight is light.

- Keep back straight.
- Avoid twisting at the waist.
- Avoid upper body/top heavy bending.
- Always grip with the palm of the hand.
- Use designated hand holds.
- Keep load as close to the body as possible.
- Always use assistance if required.

SAFE HANDLING OF SUBSTANCES

No asbestos, mercury or CFCs are included in any part of the boiler or its manufacture.

LOCATION OF BOILER

The boiler must be installed on a flat and vertical wall, capable of adequately supporting the weight of the boiler and any ancillary equipment.

The boiler must not be fitted outside.

GAS SUPPLY

The local gas supplier should be consulted, at the installation planning stage, in order to establish the availability of an adequate supply of gas. An existing service pipe must NOT be used without prior consultation with the local gas supplier.

A gas meter can only be connected by the local gas supplier or by a Gas Safe Registered Engineer or in IE by a competent person.

An existing meter should be checked, preferably by the gas supplier, to ensure that the meter is adequate to deal with the rate of gas supply required. A minimum working gas pressure of 17.5mbar MUST be available at the boiler inlet for Natural gas

Do not use pipes of smaller size than the boiler inlet gas connection.

The complete installation MUST be tested for gas soundness and purged in accordance with the appropriate standards listed on page 4.

FLUE INSTALLATION

Individual air supply and flue outlet pipes are used. The material used for the flue outlet and the air intake systems, must be muPVC to BS 5255. In addition the flue outlet and air intake pipework must be marked BSEN 1566-1 and the fittings must be marked BSEN 1329. Marley muPVC Solvent Weld Waste System (50mm) and Polypipe System 2000 muPVC Solvent Weld Waste System (50mm) are recommended. **DO NOT USE ABS PIPE OR FITTINGS**.

IMPORTANT

It is the responsibility of the installer to ensure, in practice, that products of combustion discharging from the terminal cannot re-enter the building or any other adjacent building through ventilators, windows, doors, other sources of natural air infiltration, or forced ventilation / air conditioning.

If this should occur the appliance MUST be turned OFF, labelled as 'unsafe' and corrective action taken.

Where the lowest part of the terminal is fitted less than 2m (80") above a balcony, above ground or above a flat roof to which people have access then the terminal MUST be protected by a purpose designed guard. The minimum spacing between the balcony and the terminal should be 75mm, in order to allow a terminal guard to be fitted.

Terminal guards are available from boiler suppliers

Ensure that the guard is fitted centrally.

The air inlet/products outlet duct and the terminal of the boiler MUST NOT be closer than 25mm (1") to combustible material. Detailed recommendations on the protection of combustible material are given in BS. 5440-1: 2008. In IE refer to I.S.813:2002.

The flue must be installed in accordance with Building Regulations and the recommendations of BS. 5440-1:2008 for inputs up to 70kW nett.

WATER CIRCULATION SYSTEM

The boiler must NOT be used for direct hot water supply. The hot water storage cylinder MUST be of the indirect type.

Single feed, indirect cylinders are not recommended and MUST NOT be used on sealed systems.

The appliances are NOT suitable for gravity central heating nor are they suitable for the provision of gravity domestic hot water.

The hot water cylinder and ancillary pipework, not forming part of the useful heating surface, should be lagged to prevent heat loss and any possible freezing - particularly where pipes run through roof spaces and ventilated underfloor spaces.

The boiler must be vented.

Draining taps MUST be located in accessible positions, which permit the draining of the whole system - including the boiler and hot water storage vessel. They should be at least 1/2" BSP nominal size and be in accordance with BS. 2879.

The central heating system should be in accordance with the relevant standards listed on page 4.

The Keston boilers feature an integral circulating pump which has sufficient excess head to drive most domestic systems. The available head is indicated in the chart below. If the system resistance, at the desired flow rate, is in excess of the available head from the integral pump an additional system pump will be required.

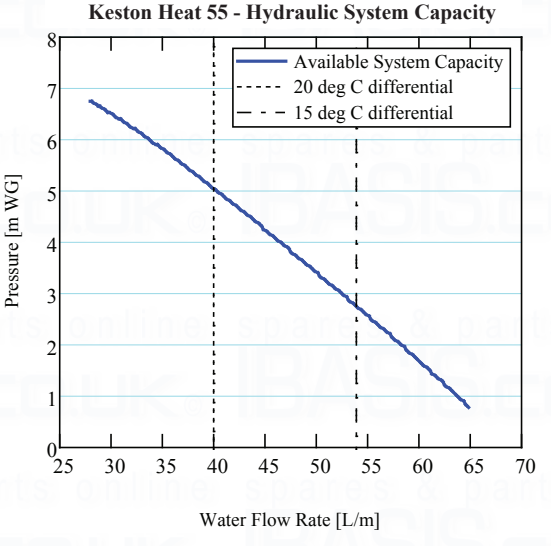

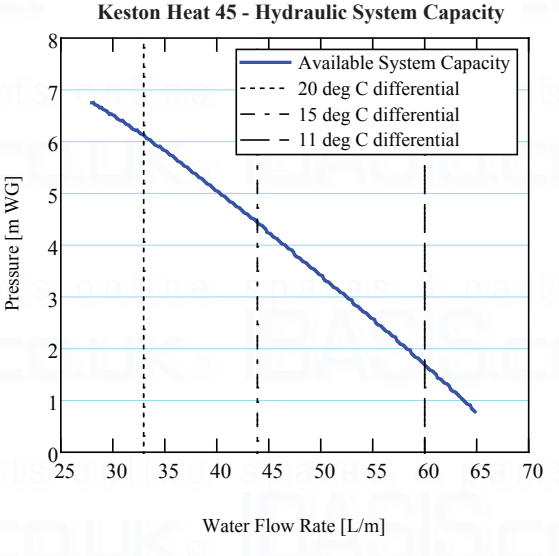

continued . . . . . .

The schematic below illustrates a recommended approach to using an additional system pump. The additional system pump should be sized to overcome the index circuit resistance only as the boilers integral pump will overcome boiler resistance.

If an additional pump is required the selected pump must comply with BS 1394.

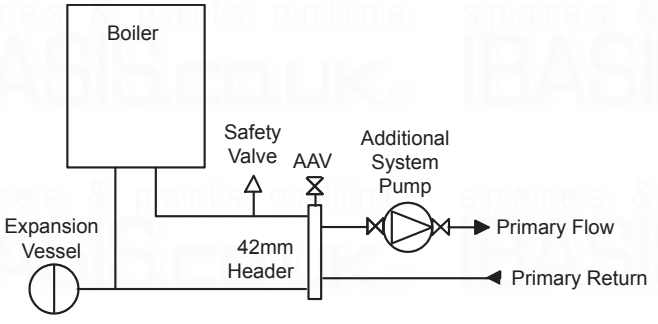

Installation of air bleed valves at the high spot(s) in the system will allow for air elimination when filling the system and will allow re-venting in a day or so after all air has been driven out of solution.

Note.

- *With the boiler firing at minimum rate, the temperature differential should not be greater than 35°C. Lower flow rates generating higher temperature differentials will lead to lock out of the boiler.*

In installations where all radiators have been provided with thermostatic radiator valves, it is essential that water circulation through the boiler is guaranteed. This can be best achieved by means of a differential pressure valve, which is installed in a bypass between the flow and return pipes. The bypass should be fitted at least 6m from the boiler, and should use a minimum size of 28mm pipe. The bypass should be capable of allowing a minimum flow rate to achieve a temperature differential of no greater than 35°C at minimum rate.

WATER TREATMENT

These boilers incorporate an ALUMINIUM heat exchanger.

IMPORTANT. The application of any other treatment to this product may render the guarantee of **Keston** INVALID.

Keston recommend Water Treatment in accordance with Guidance Notes on Water Treatment in Central Heating Systems.

Keston recommend the use of Fernox Copal or MB1 or GE Betz Sentinel X100 inhibitors and associated water treatment products, which must be used in accordance with the manufacturers' instructions.

For further information contact:

Fernox Cookson Electronics,
Forsyth Road, Sheerwater, Woking, Surrey, GU21 5RZ
Tel: +44 (0) 870 601 500
or
Sentinel Performance Solutions, The Heath Business and Technical Park, Runcorn, Cheshire, WA7 4QX
Tel: 0800 389 4670
www.sentinel-solutions.net

Notes.

1. *It is most important that the correct concentration of the water treatment products is maintained in accordance with the manufacturers' instructions.*
2. *If the boiler is installed in an existing system any unsuitable additives MUST be removed by thorough cleansing. BS7593:1992 details the steps necessary to clean a domestic heating system.*
3. *In hard water areas, treatment to prevent limescale may be necessary - however the use of artificially softened water is NOT permitted.*
4. *Under no circumstances should the boiler be fired before the system has been thoroughly flushed.*

ELECTRICAL SUPPLY

Wiring external to the appliance MUST be in accordance with the current I.E.T. (BS7671) Wiring Regulations and any local regulations which apply. For Ireland reference should be made to the current ETCI rules for electrical installations

The point of connection to the mains should be readily accessible and adjacent to the boiler.

CONDENSATE DRAIN

Refer to Frames 24, 25 & 60

A condensate drain is provided on the boiler. This drain must be connected to a drainage point on site. All pipework and fittings in the condensate drainage system MUST be made of plastic - *no other materials may be used.*

IMPORTANT.

Installation must be in accordance with BS 6798.

The drain outlet on the boiler is sized for standard 21.5mm (3/4") overflow pipe. It is a universal fitting to allow use of different brands of pipework.

Note that all external runs must be insulated.

1 BOILER CLEARANCES AND CONNECTIONS

The following minimum clearances must be maintained for operation and servicing.

Front of boiler - 450mm

Sides of boiler - 25mm

Above boiler - 350mm

Below boiler - 300mm

Clearance between multiple boiler installations - 25mm

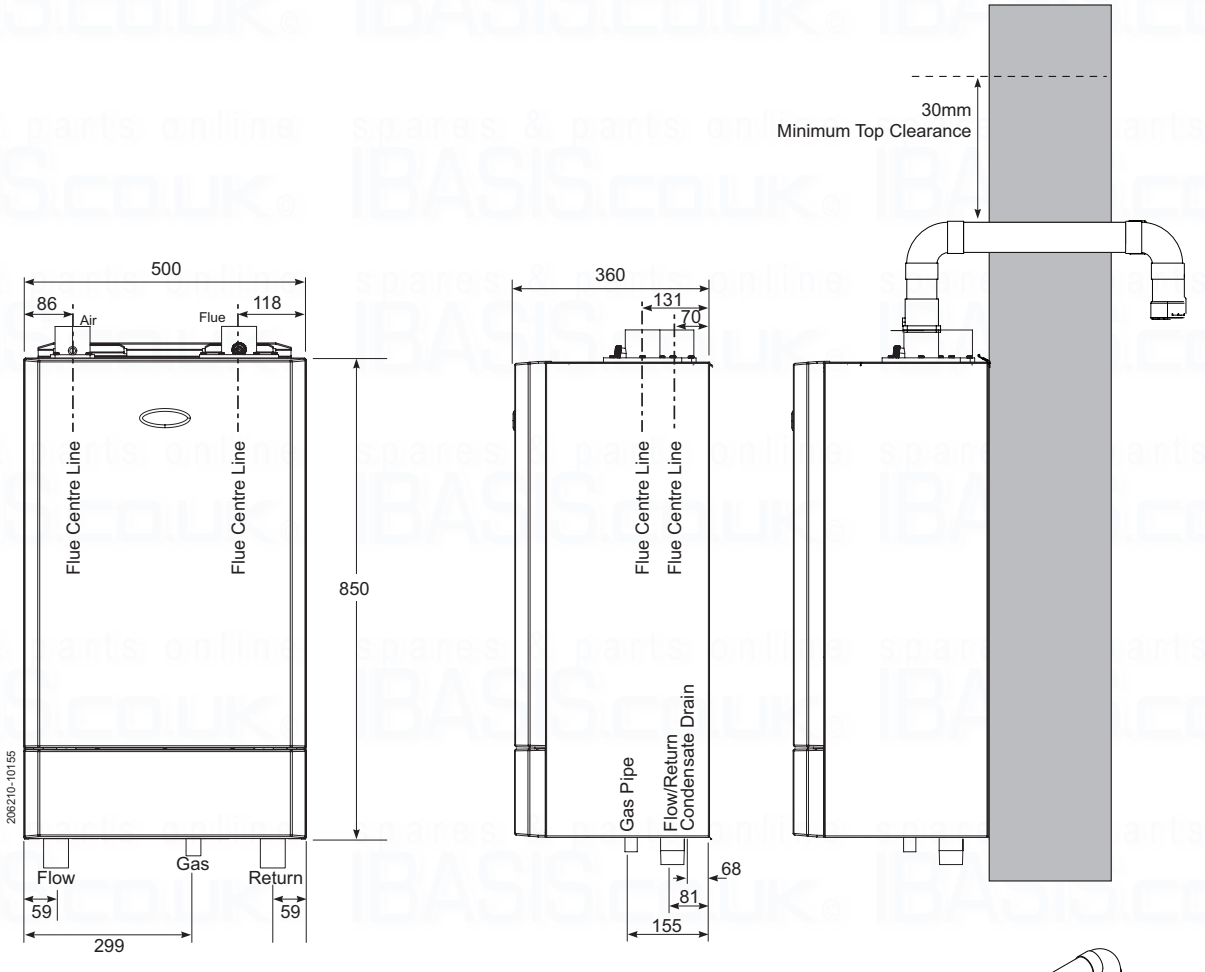

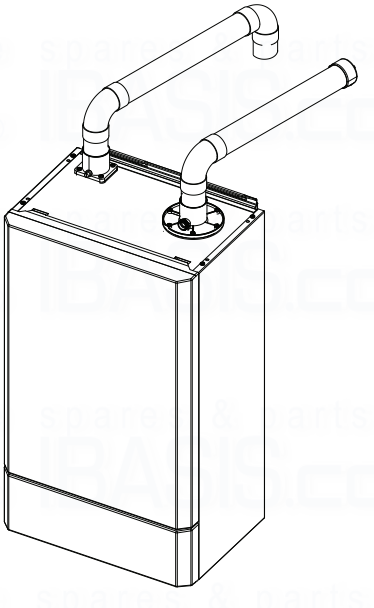

Front clearance
The minimum front clearance when built in to a cupboard is 5mm from the cupboard door but 450mm overall clearance is still required, with the cupboard door open, to allow for servicing.

2 OPEN VENTED SYSTEM REQUIREMENTS

Detail reference should be made to the appropriate standards listed on page 4.

The information and guidance given below is not intended to override any requirements of the above publications or the requirements of the local authority, gas or water undertakings.

The vertical distance between any additional pump and feed/expansion cistern MUST comply with the pump manufacturer's minimum requirements, to avoid cavitation. Should these conditions not apply either lower the pump position or raise the cistern above the minimum requirement specified by **Keston**. The isolation valves should be fitted as close to the pump as possible.

The boiler is fitted with an automatic air vent, located in the left top side of the interior. This air vent must never be shut off, as this could result in dry firing of the boiler and subsequent damage to the heat exchanger.

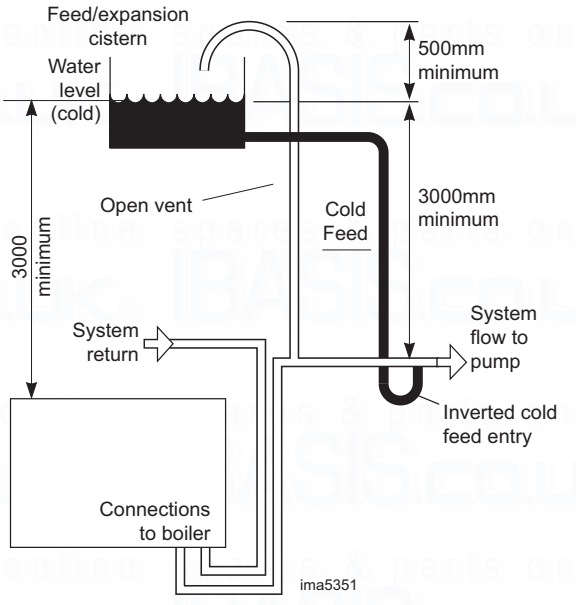

3 SEALED SYSTEM REQUIREMENTS

Note. *The method of filling, refilling, topping up or flushing sealed primary hot water circuit from the mains for a non-domestic property is shown below.*

1. General

a. Detail reference should be made to the appropriate standards listed on page 4. The information and guidance given below is not intended to override any requirements of these publications or the requirements of the local authority, gas or water undertakings.

b. The installation should be capable of working with flow temperatures of up to 90°C and a temperature differential of up to 20°C.

c. All components of the system, including the heat exchanger of the indirect cylinder, must be suitable for a working pressure of 4 bar (60 lbf/in^2) and temperature of 110°C. Care should be taken in making all connections so that the risk of leakage is minimised.

d. The boiler is fitted with an automatic air vent, located in the left top side of the interior. This air vent must never be shut off, as this could result in dry firing of the boiler and subsequent damage to the heat exchanger.

2. Safety Valve (supplied with boiler)

A spring loaded safety valve complying with the relevant requirements of BS. 6759 Pt. 1 must be fitted in the flow pipe as close to the boiler as possible and with no intervening valve or restriction. The valve should have the following features:

a. A non-adjustable preset lift pressure not exceeding 4 bar (60 lbf/in^2).

The supplied Pressure Relief Valve is for boiler protection only in the event that the flow and return isolators have been turned off. If converting to a sealed system a separately sized PRV suitably sized will need to be fitted in addition on the heating circuit.

b. A manual testing device.

c. Provision for connection of a discharge pipe. The valve or discharge pipe should be positioned so that the discharge of water or steam is visible, but will not cause hazard to user or plant.

3. Pressure Gauge

A pressure gauge covering at least the range 0-4bar must be fitted to the system. The gauge should be easily seen from the filling point and should preferably be connected at the same point as the expansion vessel.

4. Expansion Vessel

Expansion vessels used must comply with BS. EN 13831. Connection to the system must not incorporate an isolating valve.

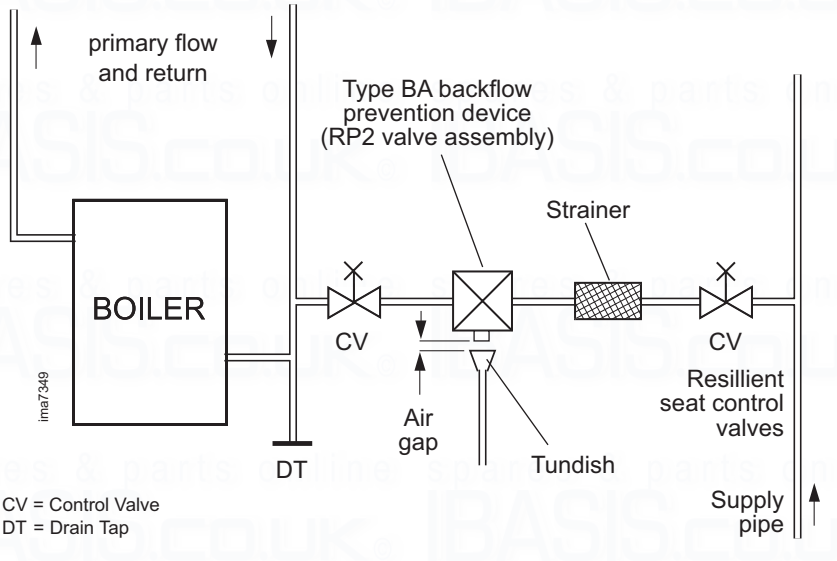

4 BOILER ASSEMBLY - Exploded View

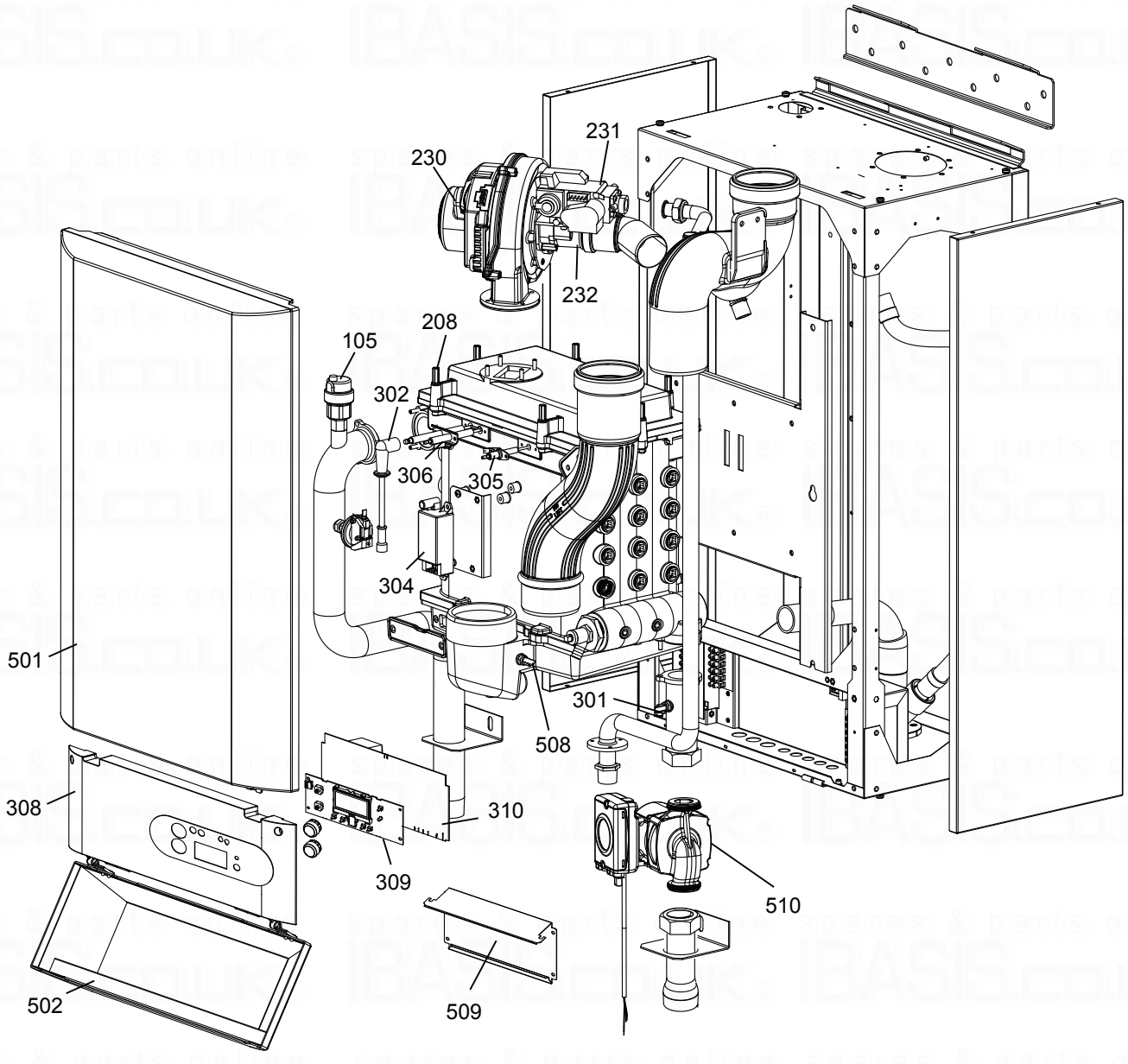

KEY					
105	Auto Air Vent	304	Ignitor Unit	502	Door Assembly Keston Heat Kit
208	Burner Fixings Kit	305	Electrode Detection Kit	508	Flue Stat
230	Fan	306	Ignition Electrode Kit	509	Bulk Head Acccess plate
231	Gas Valve Kit	308	Fascia Plastic	510	Pump
232	Venturi Kit	309	HMI Board		
301	Dry Fire Thermistor Kit	310	Primary PCB		
302	Lead Ignition Kit	501	Jacket Assembly Keston Heat Kit		

5 PACKAGING REMOVAL

- The boiler should be laying on its back with the straps removed.
- Carefully read the installation instructions before proceeding.
- Remove the accessory Box.
- Remove the outer packing sleeve.
- Remove the protective cardboard wall mounting template from the front of the boiler.
- Remove the packing piece from the top of the boiler.
- Check the contents against the list in Frame 6 'Unpacking'. Note: some items are contained within the top packing piece.
- The boiler may now be stood on its base, with the cardboard bottom packing piece still in place to protect the connections. Due care should be taken when standing up the boilers, with respect to their weights, see Table 2 on page 2.

6 UNPACKING

The boiler is supplied fully assembled in one pack. When unpacking the boiler check the contents against the list shown. Do not dispose of the packaging until all contents are accounted for, as some parts are held within the cardboard packing pieces.

Pack Contents

A Fully assembled boiler
B Installation & Servicing/User Instructions
C Log Book
D Wall mounting template
E Condensate Trap
F M10 x 70 Hex Head Coach Screws - 6 off
G M10 Wall Plug - 6 off

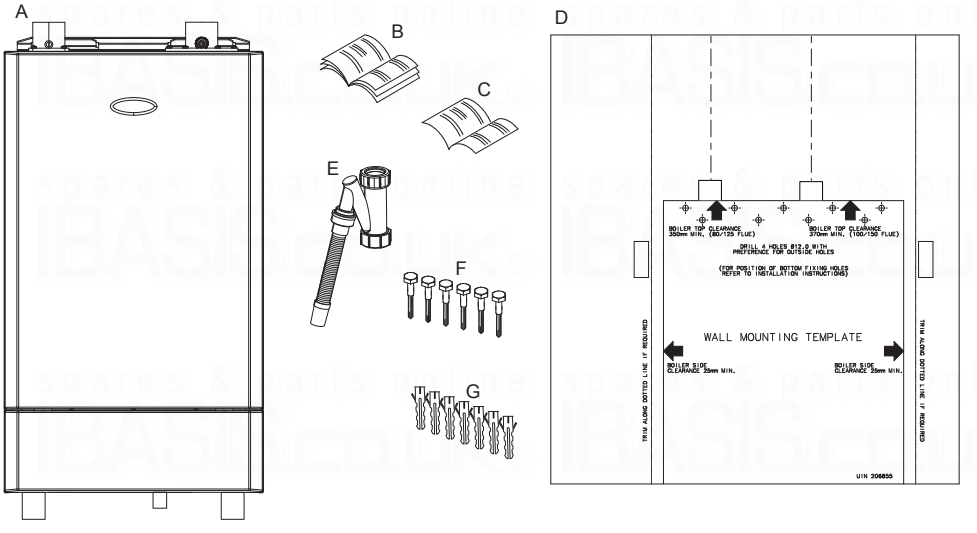

Accessory Box

A Gas cock
B Ball Valve - 2 off
C M1 Tee 3/4
D Pressure Relief Valve
E M1 Tee 1/2
F Drain Nipple 3/4
G Drain Nipple 1/2
H Wall Mounting Plate
J Terminals - 2 off
K Flue Sleeve
L Wall Plate & Screws
M Wall Seal
N Weather Compensation
P Screws - 4 off
Q Wall Plugs - 4 off

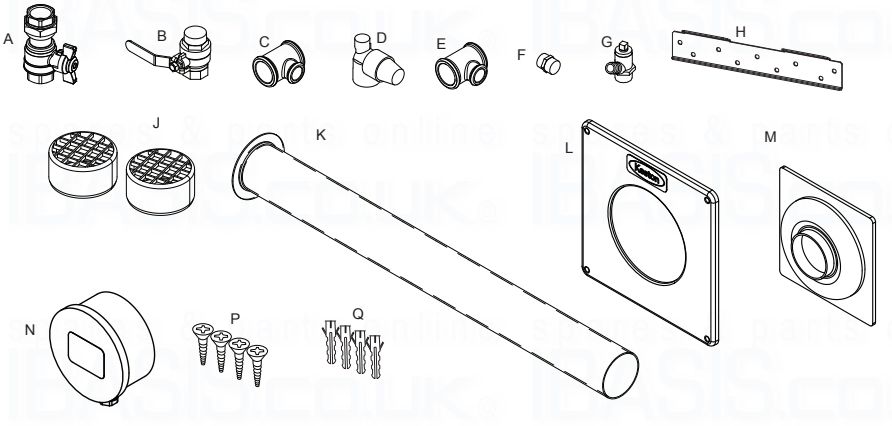

7 WALL MOUNTING TEMPLATE

Note. *The template shows the positions for the top fixing holes. Care must be taken to ensure the correct holes are drilled.*

1. Tape template into the selected position.
2. Ensure squareness by hanging a plumbline.
3. Mark on to the wall:
   a. The top 4 wall mounting plate screw positions.
   b. The 2 boiler lower fixing positions using diagram below
   c. The position of the flue duct. Mark the centre of the hole as well as the circumference.
4. Remove the template from the wall.

Note: Horizontal flue runs must be inclined at 3.5° to the horizontal to allow condensate to drain back to the boiler.

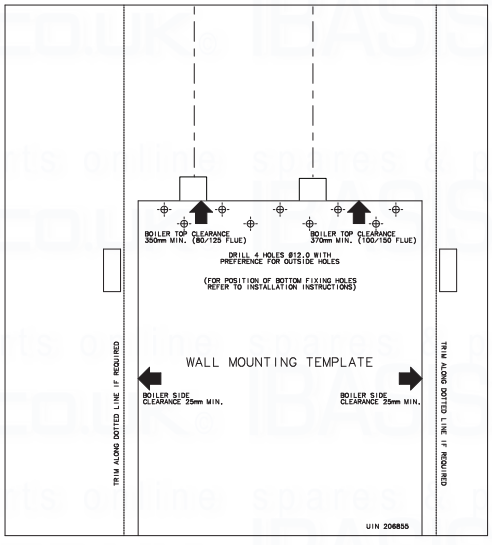

BOILER LOWER FIXING POSITIONS

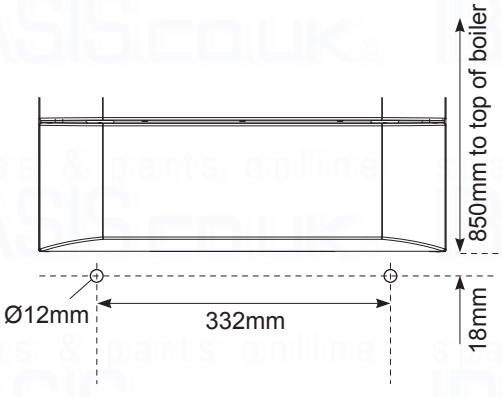

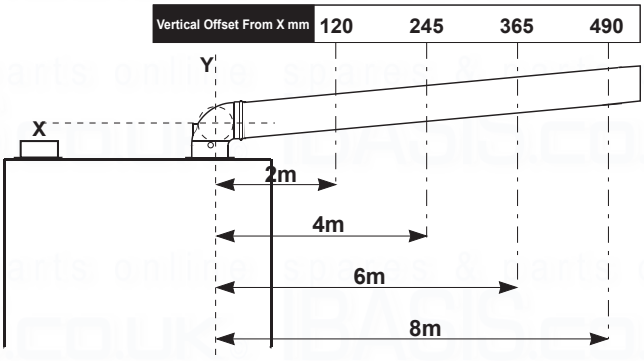

Distance from flue centre line (Y) to outside wall surface. For lengths greater than 8m, increase offset (X) by 60mm for every additional 1m.
Does not apply to air intake.

8 PREPARING THE WALL

IMPORTANT. Ensure that, during the cutting operation, masonry falling outside of the building does not cause damage or personal injury.

1. Drill 4 boiler top fixing holes with a 12mm (1/2") masonry drill and insert the plastic plugs provided, for the wall mounting plate.
2. Drill the 2 boiler lower fixing holes with a 12mm (1/2") masonry drill, insert the plastic plugs provided .
3. Fix the wall bracket, supplied in accessory box, into place with 4 M10x70 hex head coach screws provided.

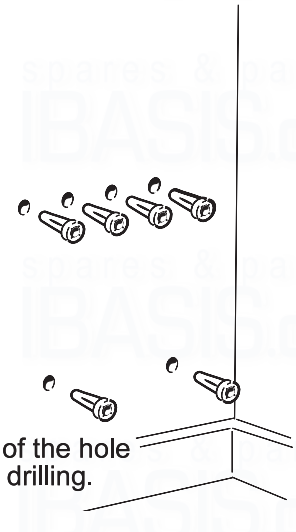

Note. Check all of the hole positions before drilling.

9 MOUNTING THE BOILER

- Due care should be taken when lifting the boilers, with respect to their weights, see Table 2 on Page 2. Also refer to Safe Handling on Page 4.

1. Lift the boiler onto the wall mounting plate as shown. Note: It is not necessary to hold the boiler at an angle to engage the wall mounting plate.
2. Using the remaining coach screws, secure the bottom of the boiler to the wall through the attached brackets.

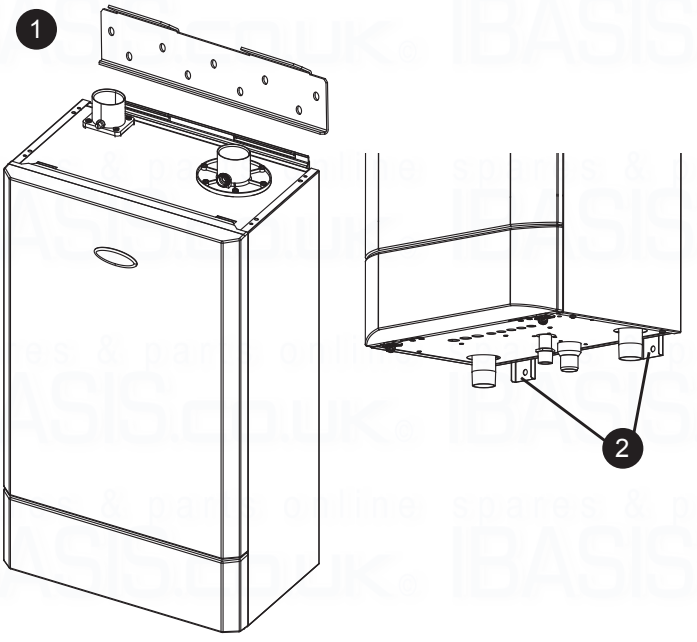

10 VENTILATION

Room Sealed Installations

A minimum of 2cm² free area per kW of net heat input at both high and low level is required for boiler rooms. For enclosures refer to BS6644.

Keston ventilation requirements when installed in a compartment up to 70kW (BS5440)				
	To a room or internal space		To outside Air	
Model	**45**	**55**	**45**	**55**
Min Free Area (cm²)	432	527	216	263

Keston Heat 45/55 (multiple boiler applications)

Detail reference should be made to BS. 6644 for inputs between 70kW and 1.8MW (net). In IE refer to the current edition of I.S.820. The following notes are for general guidance only:

If ventilation is to be provided by means of permanent high and low vents communicating direct with outside air, then reference can be made to the sizes below. For other ventilation options refer to BS. 6644. In IE refer to the current edition of I.S.820.

11 FLUE SYSTEM

Note. When installing a replacement boiler a new flue system must be used. Do not re-use the existing boiler flue installation.

Design

Individual air supply and flue outlet pipes are used as standard.

The material used for flue outlet &/or air inlet must be muPVC (PVC-C) to BS 5255 and/or BSEN 1566-1 and BSEN 1329 of an internal diameter of 51mm. (i.e. nominal 50mm diameter muPVC solvent weld waste pipe).

Marley muPVC (PVC-C) Solvent Weld Waste System (50mm) and Polypipe System 2000 muPVC (PVC-C) solvent weld waste (50mm) are the only systems approved for this application.

The following pipes and fittings are approved:

Polypipe System 2000 muPVC solvent Weld Waste System (50mm)

Poly Pipe Code	
MU 301	*4m length muPVC wastepipe 5/225*
MU 313	*50mm x 45 deg muPVC obtuse bend*
MU 314	*50mm x 92.5 deg muPVC swept bend*
MU 310	*50mm muPVC straigh coupling*
MU 316	*50mm x 92.5 deg muPVC swept pipe*

Marley muPVC solvent Weld Waste System (50mm)

Marley Code	
KP 304	*50mm x 4m double spigot pipe*
KP32	*50mm x 45 deg bend*
KSC3	*50mm straight coupling*
KB3	*50mm x 88.5 deg bend*
KT3	*50mm swept tee*

Both the 50mm flue outlet terminal and the 50mm air inlet terminal are supplied with the flue pack and are illustrated in Fig. 1 and must be used in ALL installations. (Both terminals are identical).

Fig.1

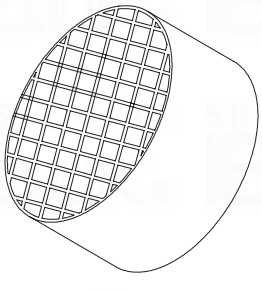

FLUE OUTLET

12 FLUE SYSTEM.... CONT'D

TERMINATION OF THE FLUE AND AIR

The flue and air pipes may terminate independently through any external walls within the same dwelling except on opposing walls, within the maximum lengths shown in Fig 3 & 4.

The air pipe must have an elbow and 150mm length of pipe directed downwards with a termination grill fitted.

The air pipe can be situated at the side or beneath the flue pipe to a minimum dimension of 140mm (see diagram below). It must not be sited above the flue pipe.

The flue and air pipes must extend by at least 40mm from the wall surface.

Condensing boiler emit a visible plume of water vapour from the flue terminal, this is normal. It is the responsibility of the installer to judiciously select a terminal location that does not cause a nuisance.

If either the flue or air terminal is below a height of 2m from ground level a terminal guard must be fitted.

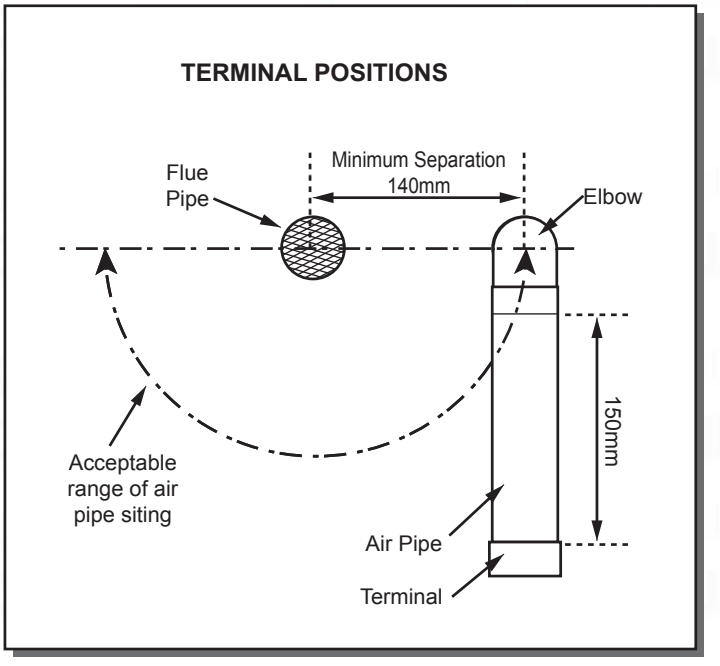

MAXIMUM LENGTHS

Due to the resistance presented by extended flue length a slight reduction in maximum boiler output will occur where combined flue and air lengths in excess of 16.0m (50mm muPVC) are used. In such cases the boiler output will be reduced by 0.8% per additional metre.
The maximum lengths of both air inlet pipe and flue outlet pipe, when no bends are used, are as detailed in figs 3 & 4.
However, each bend used has an equivalent length that must be deducted from the maximum straight length stated in figs 3 & 4. Knuckle bends must not be fitted.
A 92.5º swept elbow is equivalent to 1.0m straight length. A 45º bend is equivalent to 0.5m straight length.
It is possible to have variable flue and air lengths as described within the shaded area of Figs 3 & 4.

Fig. 3

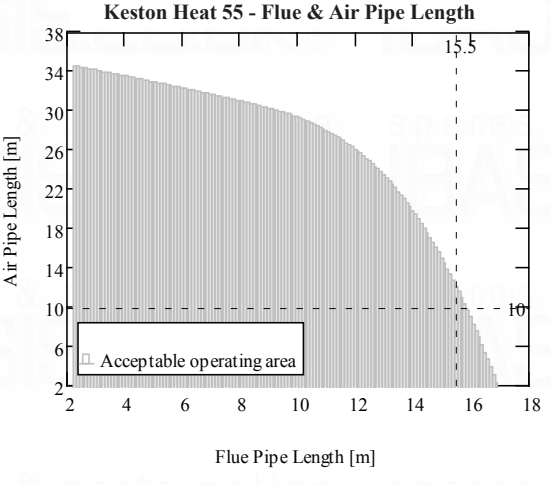

Fig. 4

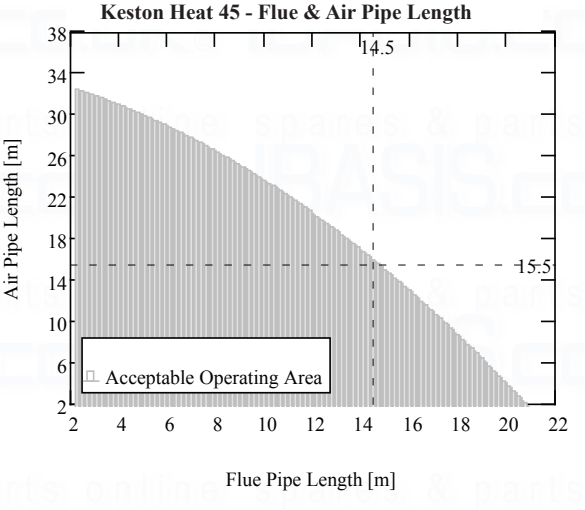

SLOPE

'Horizontal' flue outlet pipework MUST slope at least 3.5 degrees (60mm per metre run) downwards towards the boiler. Pipework can be vertical. Only swept elbows can be used.

Air inlet pipework can be truly horizontal or vertical, or sloping in a downward direction towards the boiler but in each case rain, etc., **must** be prevented from entering the pipe. **There must be no troughs in any of the pipework, whether it be air inlet or flue outlet.**

13 FLUE TERMINATION POSITION

Twin Flue Positions	Flue Minimum Spacing		Air Minimum Spacing	
A. Below an opening (1)	300 mm	12"	50 mm	2"
B. Above an opening (1)	300 mm	12"	50 mm	2"
C. Horizontally to an opening (1)	300 mm	12"	50 mm	2"
D. Below gutters, soil pipes or drain pipes	75 mm	3"	75 mm	3"
E. Below eves	200 mm	8"	50 mm	2"
F. Below balcony or car port roof	200 mm	8"	50 mm	2"
G. From a vertical drain pipe or soil pipe	150 mm	6"	50 mm	2"
H. From an internal or external corner or to a boundary alongside the terminal	300 mm	12"	50 mm	2"
I. Above ground, roof or balcony level	300 mm	12"	100 mm	4"
J. From a surface or a boundary facing the terminal	600 mm	24"	100 mm	4"
K. From a terminal facing the terminal	1200 mm	48"	1200 mm	48"
L. From an opening in the car port into the building	1200 mm	48"	100 mm	4"
M. Vertically from a terminal on the same wall	1500 mm	60"	1500 mm	60"
N. Horizontally from a terminal on the same wall	300 mm	12"	300 mm	12"

(1) An opening here means an openable element, such as a openable window, or a fixed opening such as an air vent. However, in addition, the outlet should not be nearer than 150mm (fanned draught) to an opening into the building fabric formed for the purpose of accommodating a built in element, such as a window frame.

The dimensions given in the table above may need to be increased to avoid wall staining and nuisance depending on site conditions.

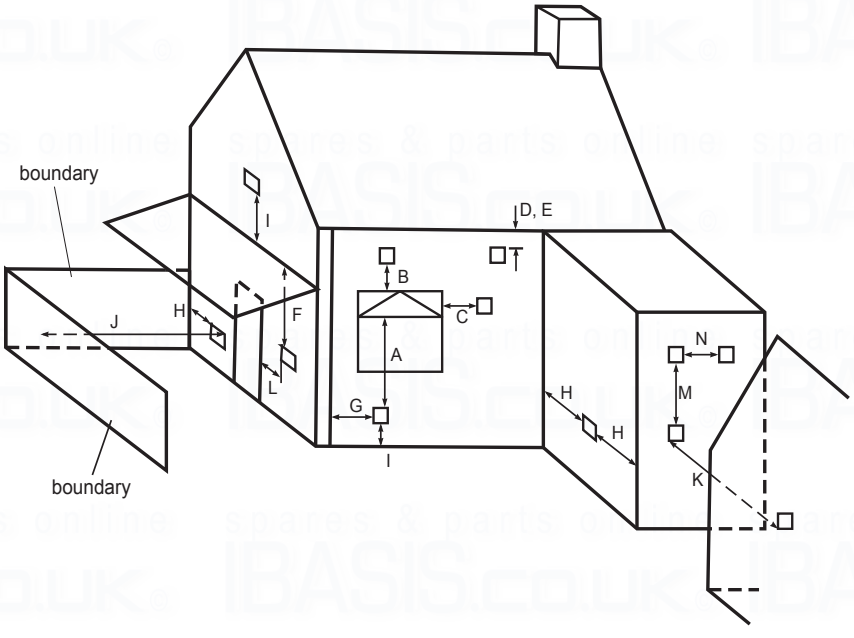

GENERAL INSTALLATIONS

All parts of the system must be constructed in accordance with BS 5440 Part 1, except where specifically mentioned in these instructions.

All pipe work must be adequately supported.

Marley muPVC (PVC-C) Solvent Weld Waste System (50mm) and Polypipe System 2000 muPVC (PVC-C) solvent weld waste (50mm) are the only systems approved for this application.

Consideration must be given to Gas Safe Register bulletin TB008 regarding flues in voids and inspection hatches.

The boiler casing must always be correctly fitted to the boiler when leaving the appliance operational.

External wall faces and any internal faces of cavity walls must be good.

Rubber collars are available for flue and air terminals to finish the external wall face around the terminals (Part No C.08.00.07.0).

AIR SUPPLY

The Keston Heat is a room-sealed appliance and therefore does not require purpose provided ventilation to the boiler room for combustion air.

14 ASSEMBLY PRACTICE

Remove all plastic debris and burrs when installing air intake piping. Plastic filings caused by cutting muPVC pipe must not be allowed to be drawn into the combustion air blower. Prevent dust entering the air intake when cutting on building sites. Blower failure which is determined to be caused by plastic filings or other debris will not be covered by guarantee.

INSTALLING FLUE AND AIR PIPES

Important - When installing the boiler on an existing system a new flue and air intake system MUST also be installed. You **MUST NOT** re-use existing flue or air pipework components.

- Remove the flue adaptor and air spigot from the flue pack supplied with the boiler.
- Remove boiler front panel - Frame 55
- Remove air intake blanking plate by unscrewing 4 x M5 screws and put to one side, leaving sponge gasket in place.
- Fix air spigot to boiler using the 4 M5 screws, see diag. below. Ensure sponge gasket is in place and not damaged.
- Insert the flue adaptor into the flue manifold on the top of the boiler and secure using the 6 M5 screws provided
- Measure, cut and check the air and flue pipes to pass to the exit from the wall(s) or ceiling.
- Always thoroughly deburr all pipes and most important, remove shavings from within the pipe.
- Assemble, using solvent weld cement, the pipework from the boiler connections to the exit from the first wall/ceiling, (remount the boiler if removed). Care must be taken when applying solvent weld to ensure it does not come into contact with the sample plug. When pushing pipe through walls, ensure grit and dust is not allowed to enter the pipe.

  Ensure pipes are fully engaged into sockets and solvent welded with no leaks.

- Using the same methods drill any further holes (always covering existing pipework), cut and assemble the pipework.
- From outside, complete the two terminations - See Frame 11 Flue System and make good all holes. (Wall sealing collars are available to make good hole areas on the wall face (part number C.08.0.00.07.0).
- **Support any pipes whose route could be displaced either of its own accord or by accident. Any horizontal run over 1m or vertical runs of any length must always be supported. Brackets should be placed at intervals of approximately 1m. Brackets should be loose enough on the pipe to allow thermal expansion and contraction movement.**
- **Flue pipework through walls MUST be sleeved to allow thermal expansion and contraction movement.**
- Check all connections for security and re-seal any joints using solvent cement where soundness may be in doubt.
- Check Sample plug for free movement and seating.

Note. It is equally important to seal the air inlet with solvent cement as the flue outlet pipe joints.

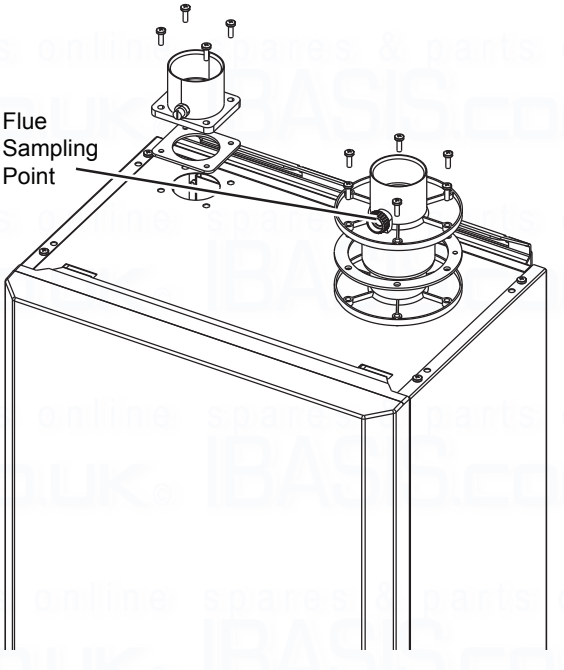

15 FITTING THE FLUE SLEEVING

1. Cut hole in wall.
2. Measure wall Thickness
3. Cut sleeve length to match wall thickness & remove burrs.
4. Grout sleeve into wall with flange on external face.
5. Slide flue pipe into sleeve, checking it is free to slide.
6. Slide Flexible wall seal over flue pipe and push centre ring up to sleeve flange when cold.
7. Locate wall plate over flexible wall seal and clamp in place using the raw plug pack.
8. Affix flue terminal
9. During boiler test check that the flue end is free to expand and contract with flexible wall seal.

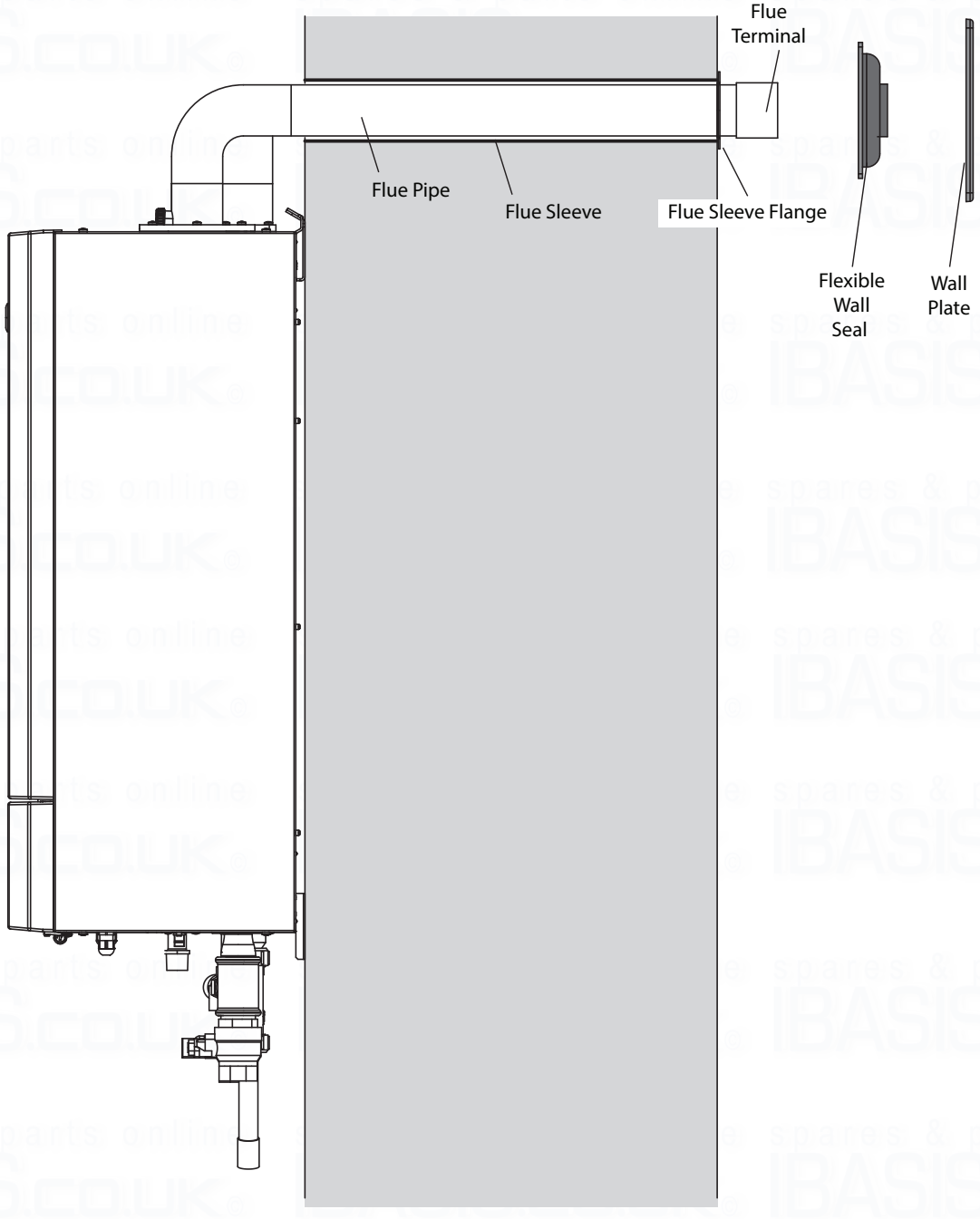

FLUE OUTLET

16 FLUE INSTALLATION EXAMPLE KESTON HEAT 55

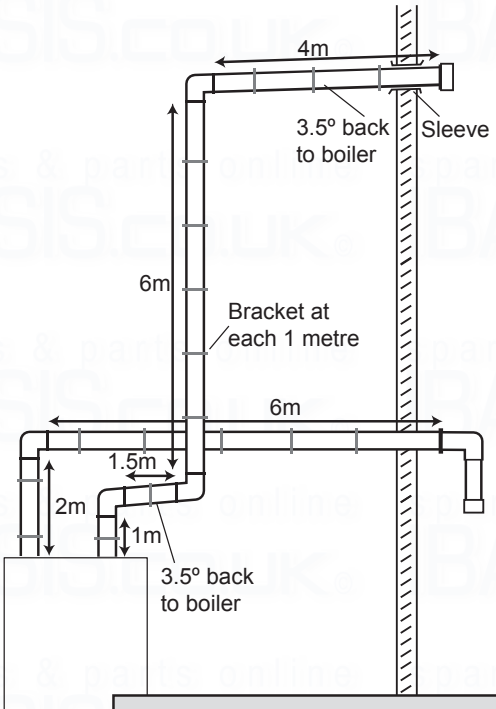

Calculations

Air	Flue
Elbows 2 x 1m = 2m	Elbows 3 x 1m = 3m
Straights 6+2 = 8m	Straights 4+6+1.5+1 = 12.5m
Total = 10m	Total = 15.5m

Overall Flue / Air = 25.5m

Fig. 3

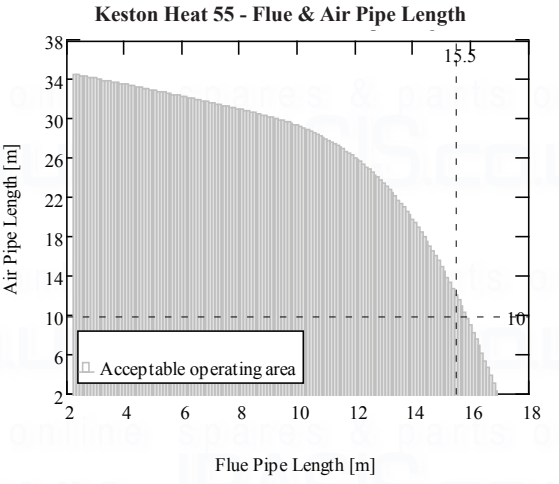

17 FLUE INSTALLATION EXAMPLE KESTON HEAT 45

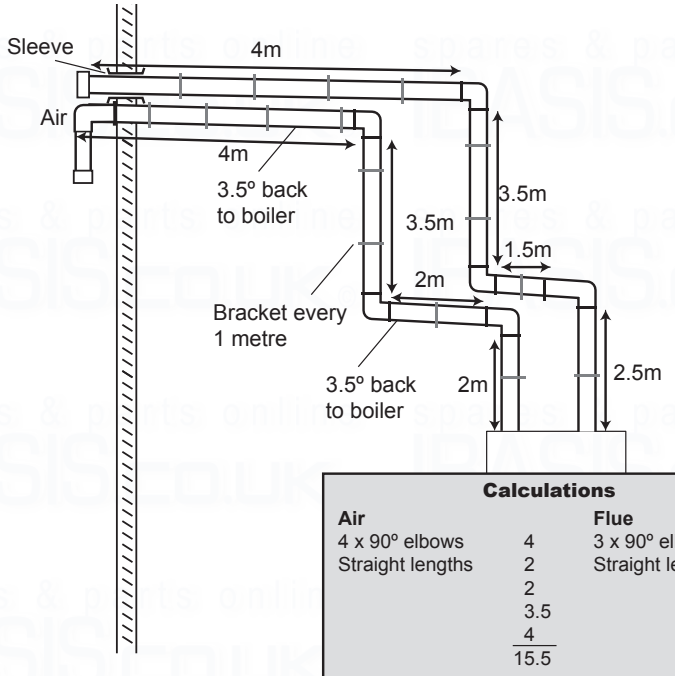

Calculations

Air		Flue	
4 x 90º elbows	4	3 x 90º elbows	3
Straight lengths	2	Straight lengths	2.5
	2		1.5
	3.5		3.5
	4		4
	15.5		14.5

Overall Flue / Air = 30m

Fig. 4

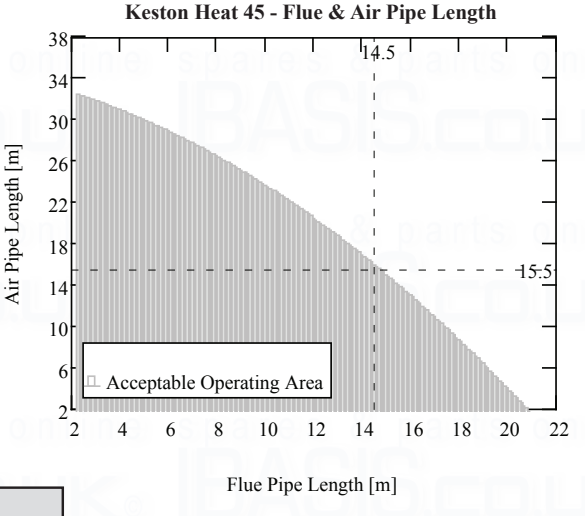

23 SEQUENCER CONTROL OF MULTIPLE BOILERS

In installations where the heat load is greater than the boiler capacity an ideal solution is to use multiple boiler arrangements.

The ideal way to control a multiple boiler installation is with our modulating sequencer

See below a typical installation with our modulating sequencer kit. This device is capable of controlling up to 5 boilers. Additional kits are required for greater than this.

Legend

1. Non-return valve
2. Safety valve
3. Service valve
4. Mixing header
5. System pump
6. Modulating Sequencer kit complete with outdoor sensor and flow sensor
7. Flue gas terminal
8. Drain cock
9. Room Sensor

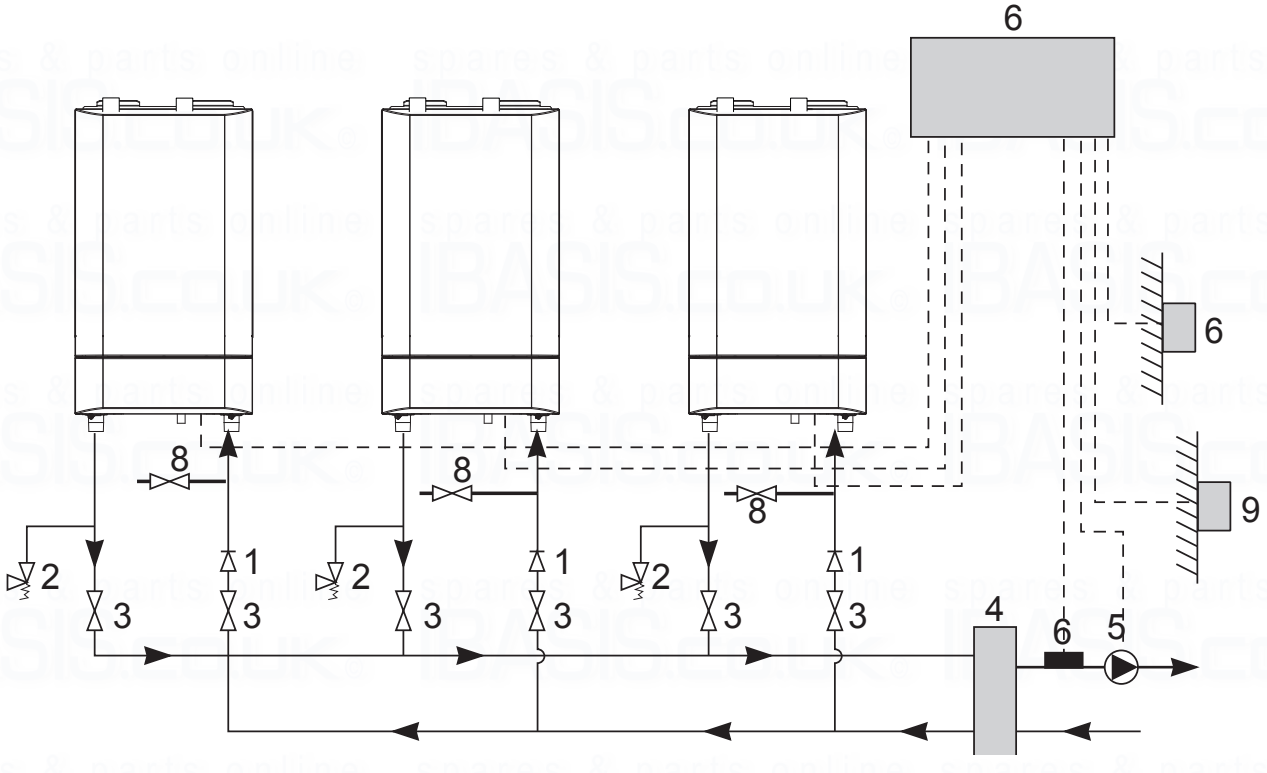

24 CONDENSATE DRAIN

This appliance is fitted with a siphonic 75mm condensate trap system that requires filling before operating the appliance for the 1st time or after maintenance.

All condensate pipework should conform to the following:

a. Where a new or replacement boiler is being installed, access to an internal 'gravity discharge' termination should be one of the main factors considered in determining boiler location.
b. Plastic with push fit or solvent connections.
c. Internal plastic pipe work a minimum of 19mm ID (typically 22mm OD)
d. External plastic pipe must be a minimum of 30mm ID (typically 32 OD) before it passes through the sleeved wall.
e. All horizontal pipe runs, must fall a minimum of 45mm per metre away from the Boiler.
f. External & unheated pipe work should be kept to a minimum and insulated with Class "O" waterproof pipe insulation.
g. All installations must be carried out in accordance to the relevant connection methods as shown in the "Condensate installation diagrams" & BS6798:2009
h. Pipe work must be installed so that it does not allow spillage into the dwelling in the event of a blockage (through freezing)
i. All internal burrs should be removed from the pipe work and any fittings.

In order to minimise the risk of freezing during prolonged very cold spells, one of the following methods of terminating condensate drainage pipe should be adopted.

Internal Drain Connections
Wherever possible, the condensate drainage pipe should be routed to drain by gravity to a suitable internal foul water discharge point such as an internal soil and vent stack or kitchen or bathroom waste pipe etc. See Figs 1 and 2.

Condensate Pump
Where gravity discharge to an internal termination is not physically possible or where very long internal pipe runs would be required to reach a suitable discharge point, a condensate pump of a specification recommended by the boiler or pump manufacturer should be used terminating into a suitable internal foul water discharge point such as an internal soil and vent stack or internal kitchen or bathroom waste pipe etc. (fig 3).

External Drain Connections
The use of an externally run condensate drainage pipe should only be considered after exhausting all internal termination options as described previously. An external system must terminate at a suitable foul water discharge point or purpose designed soak away. If an external system is chosen then the following measures must be adopted:

The external pipe run should be kept to a minimum using the most direct and "most vertical" route possible to the discharge point, with no horizontal sections in which condensate might collect.

- For connections to an external soil/vent stack see Fig 4. Insulation measures as described should be used.
- When a rainwater downpipe is used, an air break must be installed between the condensate drainage pipe and the downpipe to avoid reverse flow of rainwater into the boiler should the downpipe become flooded or frozen, see Fig 5.
- Where the condensate drain pipe terminates over an open foul drain or gully, the pipe should terminate below the grating level, but above water level, to minimise "wind chill" at the open end. The use of a drain cover (as used to prevent blockage by leaves) may offer further prevention from wind chill. See Fig 6.
- Where the condensate drain pipe terminates in a purpose designed soak away (see BS 6798) any above ground condensate drain pipe sections should be run and insulated as described above. See Fig 7

Unheated Internal Areas
Internal condensate drain pipes run in unheated areas, e.g. lofts basements and garages, should be treated as external pipe.

Ensure the customer is aware of the effects created by a frozen condensate and is shown where this information can be found in the user manual.

Figure 1 - Connection of Condensate Drainage Pipe to Internal Soil & Vent Stack

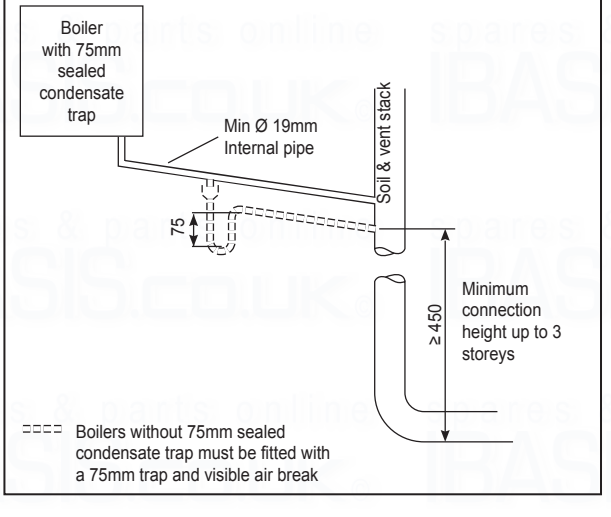

Figure 2 - Connection of a Condensate Drainage Pipe Downstream of a Sink, Basin, Bath or Shower Water Trap to Internal Soil Vent Stack

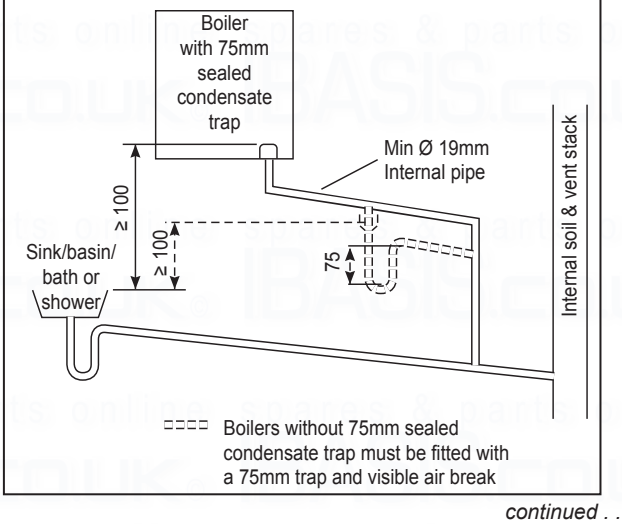

continued . . . . .

25 CONDENSATE DRAIN - CONT'D.....

Figure 3 - Connection of a Condensate Pump Typical Method (see manufacturers detailed instructions)

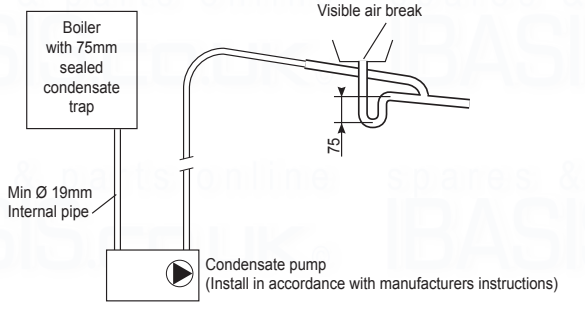

Figure 4 - Connection of condensate Drainage Pipe to External Soil & Vent Stack

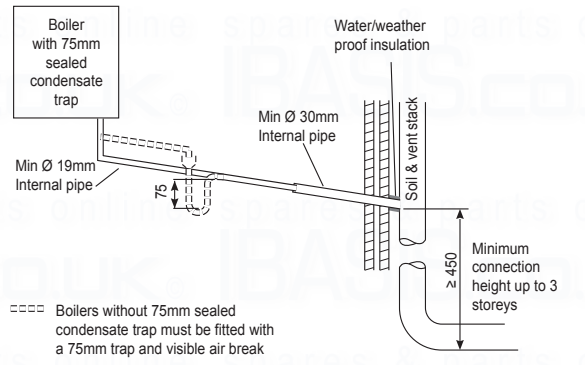

Figure 5 - Connection of a Condensate Drainage Pipe to an External Rainwater Downpipe (only combined foul/rainwater drain)

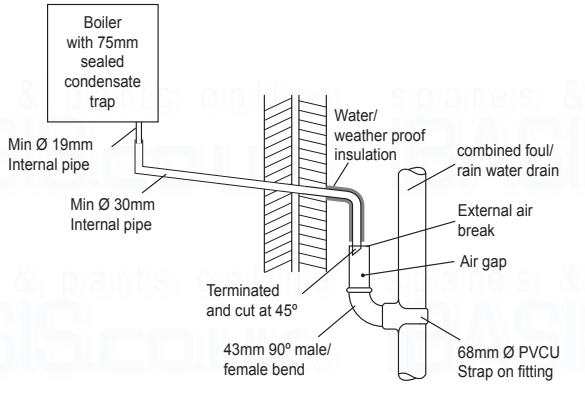

Figure 6 - Connection of Condensate Drainage Pipe Upstream of a Sink, Basin, Bath or Shower Waste Trap to External Drain, Gulley or Ranwater Hopper

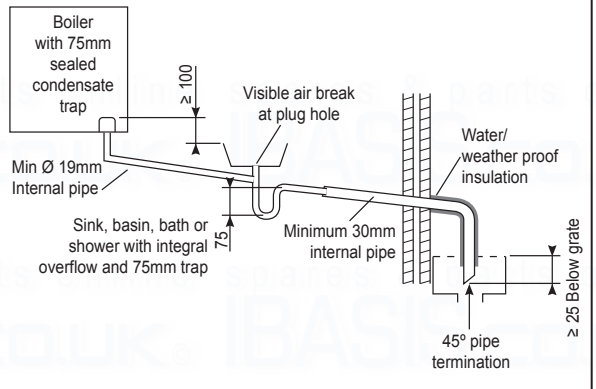

Figure 7 - Connection of a Condensate Drainage Pipe to an External Purpose Made Soak Away.

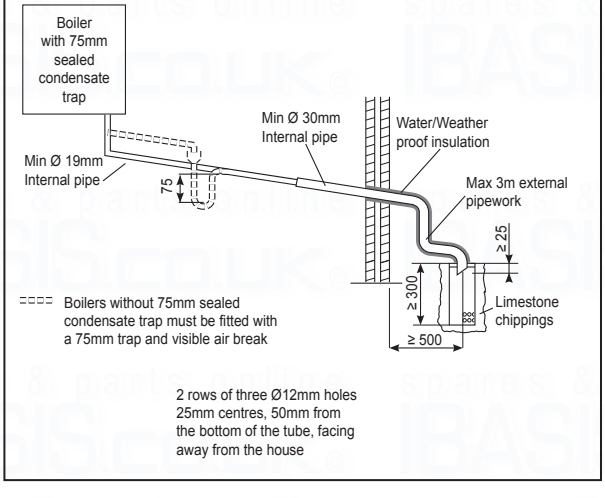

26 BOILER WATER CONNECTIONS

The boiler flow and return pipes are terminated with 1 $^1/_4$" BSP male connections located at the bottom of the appliance.

Note. *This appliance is NOT suitable for use with a direct hot water cylinder.*

Plastic plugs fitted into the open ends of the flow and return pipes must be removed before connecting the system pipework.

Upon installation a tee connection, isolation valve and safety relief valve/drain point must be fitted to the boiler flow/return connection respectively. (See image opposite). This hardware is provided within the boiler carton. This allows isolation for the water connections in the event of servicing the water circulation pump fitted within the boiler casing.

IMPORTANT: Correct fitment of the safety pressure relief valve **must** be made to protect the boiler in the event of inadvertent operation when isolated.

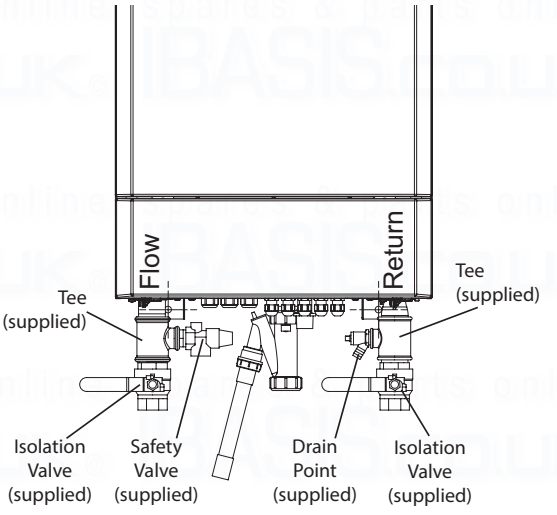

27 FROST PROTECTION

The Keston Heat boiler has built into its control system the facility to protect the boiler only against freezing.

If the boiler flow temperature T_1, falls below 5°C the pump and burner run until the temperature exceeds 19°C.

Central heating systems fitted wholly inside the building do not normally require frost protections as the building acts as a 'storage heater' and can normally be left at least 24 hours without frost damage. However, if parts of the pipework run outside the building or if the boiler will be left off for more than a day or so, then a frost thermostat should be wired into the system, see Frame 47.

28 GAS CONNECTION

Refer to Frame 1 for details of the position of the gas connection.

A MINIMUM working gas pressure of 17.5 mbar (7" w.g.) must be available at the boiler inlet for natural gas with the boiler firing. Refer to Frame 58 for details of the pressure test point position.

Extend a gas supply pipe NOT LESS THAN 22mm O.D. to the boiler and connect using the gas cock provided.

IMPORTANT. The gas service cock contains a non-metallic seal so must not be overheated when making capillary connections.

In order to determine the actual working gas pressure at the boiler inlet the figure from the table below must be added to the measured pressure (refer to Frame 56).

Keston Heat Gas Line Pressure Drop (Natural Gas)	
Boiler Model	**mbar**
45/55	1.6

Note. *It should be noted that this pressure drop is present within the internal boiler pipe work and is irrespective of the fact that manifold headers are used. This pressure drop will be experienced on each individual boiler regardless of single or multiple installation.*

29 ELECTRICAL CONNECTIONS

Warning. This appliance MUST be efficiently earthed.

A mains supply of 230V 50Hz is required. The supply wiring MUST be suitable for mains voltage. Wiring should be 3 core PVC insulated cable NOT LESS than 0.75mm^2 (24 x 0.2 mm) and to BS. 6500, Table 16. The fuse rating should be 4A.

Wiring external to the boiler MUST be in accordance with the current I.E.E. (BS7671) Wiring Regulations and any local regulations. For Ireland reference should be made to the current ETCI rules for electrical installations.

Connection should be made in a way that allows complete isolation of the electrical supply - such as a double pole switch, having a 3mm (1/8") contact separation in both poles, or a plug and unswitched socket serving only the boiler and system controls. The means of isolation must be accessible to the user after installation.

When making mains electrical connections to the boiler it is important that the wires are prepared in such a way that the earth conductor is longer than the current carrying conductors, such that if the cord anchorage should slip the current carrying conductors become taut before the earthing conductor.

4 self adhesive cable clips are provided to aid routing of the wiring across the bottom panel of the boiler.

30 FITTING THE WEATHER COMPENSATION KIT - SUPPLIED IN ACCESSORY BOX

This kit provides the facility to apply outside air temperature control to the boiler water flow temperature which provides energy savings. The outside sensor provided measures outside air temperature and sends a signal to the boiler, which adjusts the maximum boiler flow temperature in response. If outside air temperature is greater than the system design temperature, the boiler flow temperature is reduced providing running cost savings. The boiler will operate in the condensing mode more frequently increasing savings.

Once the sensor is fitted it is automatically detected.

The sensor operation may be configured by adjustment of the boiler operating parameters, if necessary.

Kit Contents

A. Outside Air Sensor

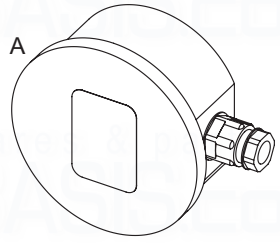

3G10011

31 EXTERNAL WIRING

External wiring MUST be in accordance with the current I.E.T. (BS7671) Wiring Regulations. For Ireland reference should be made to the current ETCI rules for electrical installations.

The wiring diagrams illustrated in Frames 45-48 cover the systems most likely to be used with this appliance.

For wiring external controls to the boiler, reference should be made to the systems wiring diagram supplied by the relevant manufacturer in conjunction with the connection diagram shown in Frames 32 and 43-48.

Difficulty in wiring should not arise, providing the following directions are observed:

1. The appliance must be wired with a permanent live supply. External controls should NOT be wired in series with this mains input. Controlling the mains input in this way will prevent the pump over-run sequence and may cause damage to the heat exchanger.
2. 230V AC output is provided optionally for a diverter valve, programmer and thermostats. Care must be taken to ensure that the earth conductor is longer than the current carrying conductors for reasons given in Frame 29.
3. Input terminals are available for connecting a variety of system controls for heating demand, and optionally for DHW demand.

   Heating demand can be controlled by:
   - 230V programmer and/or room thermostat
   - programmable room thermostat kit
   - Modulating sequencer kit
   - a bms
   - outside temperature sensor

   DHW demand can be controlled by:
   - 230V programmer and/or cylinder thermostat
   - tank sensor kit

   The electrical supply and their inputs onto the boiler can be seen in Frames 32 and 43-48.
4. An optional outside temperature sensor may be fitted for outside weather compensation. See Frame 32 for connection details.

32 INSTALLER CONNECTIONS

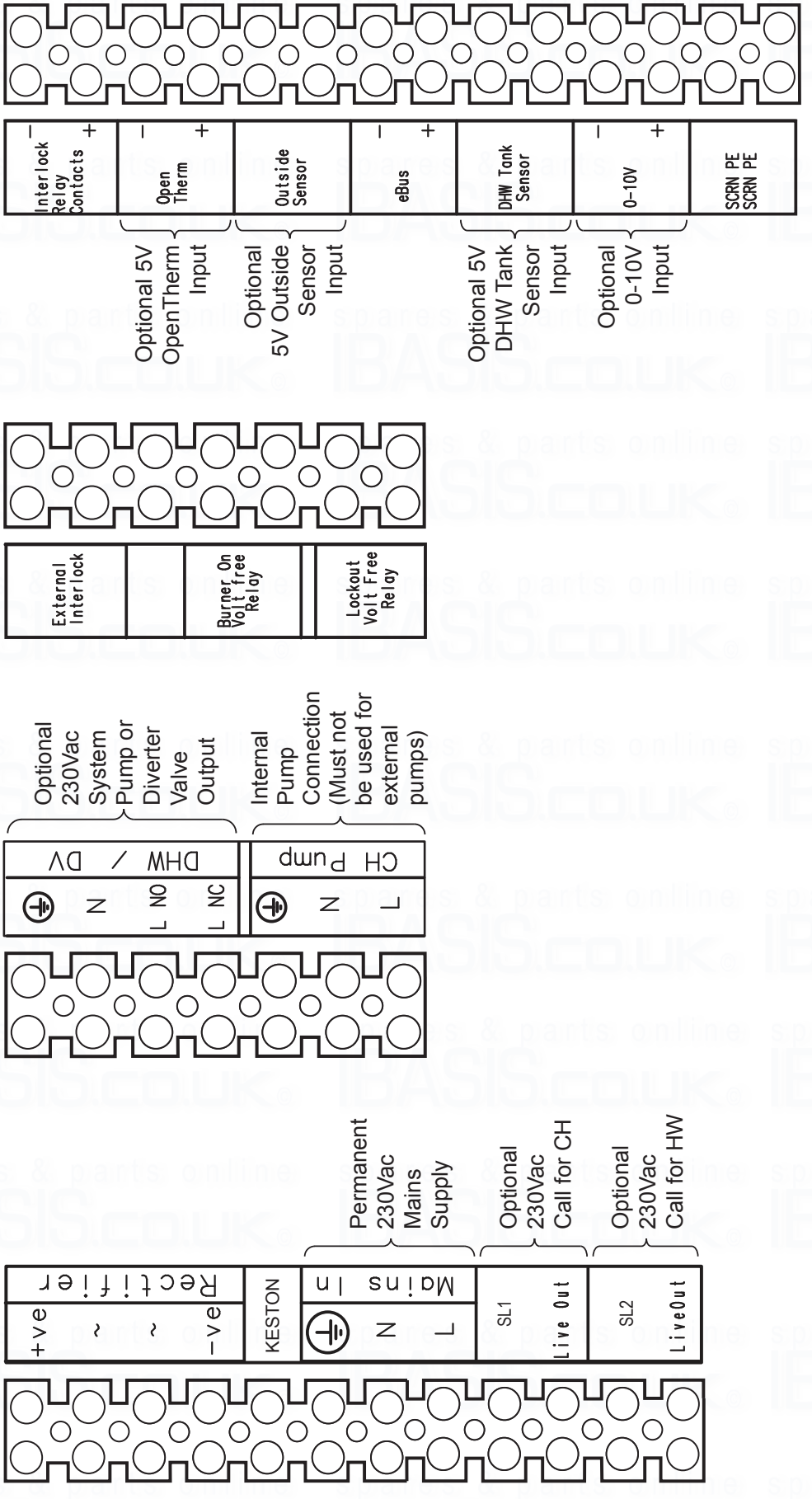

1. The Lockout Volt Free Relay contacts will close 4 minutes after a Fault occurs.
2. The Burner On Volt Free Relay contacts will close when the Burner is on.
3. Only Keston Outside Sensor and DHW Tank Sensor kits should be connected to the boiler.
4. The External Interlock and Interlock Relay Contacts connections are only used in conjunction with the External Interlock Kit.
5. The Rectifier connections must not be used (only used in the existing internal boiler wiring).
6. The eBus connections are not for use.

33 INTERNAL WIRING

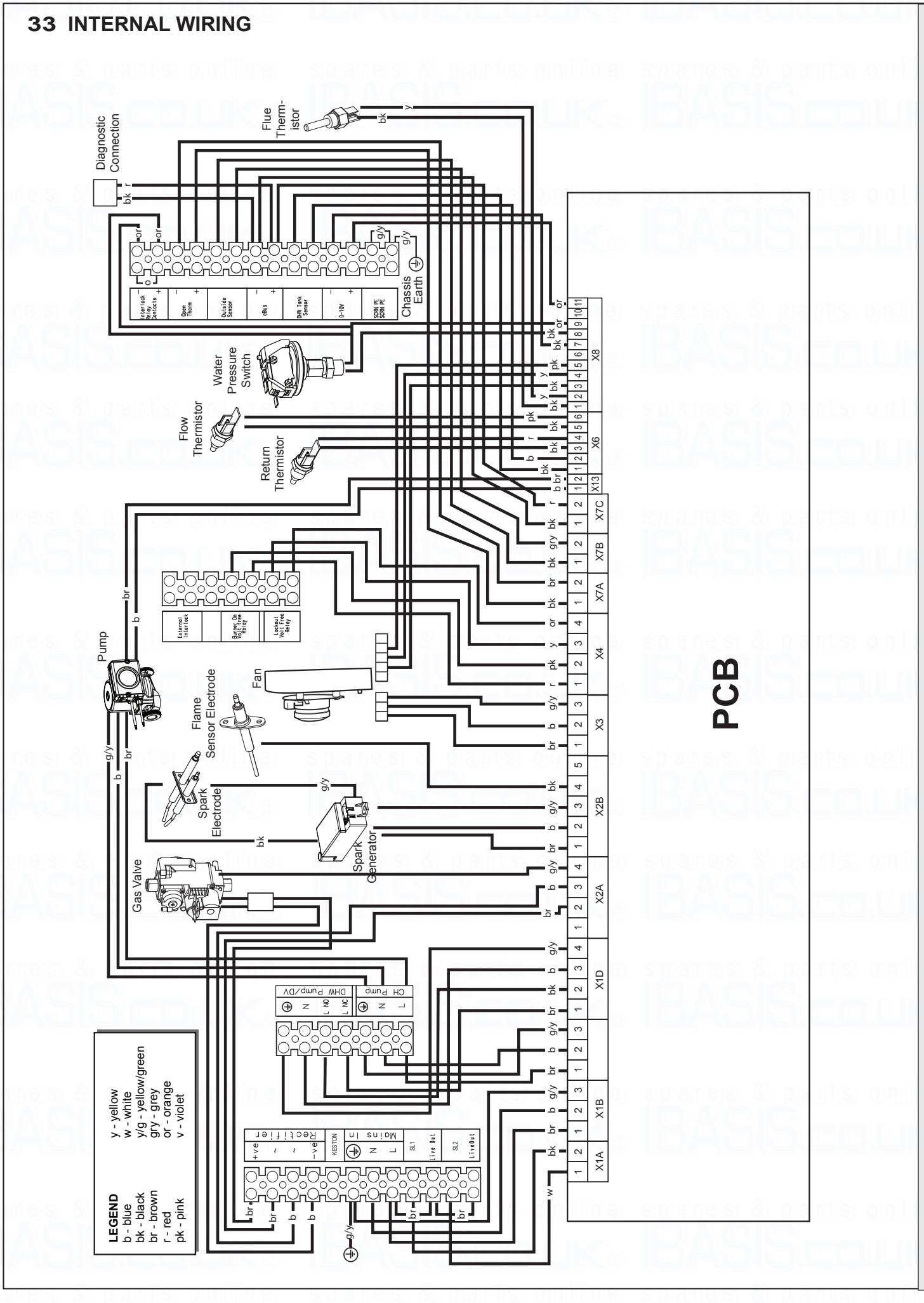

34 BASIC CONTROLS DISPLAY

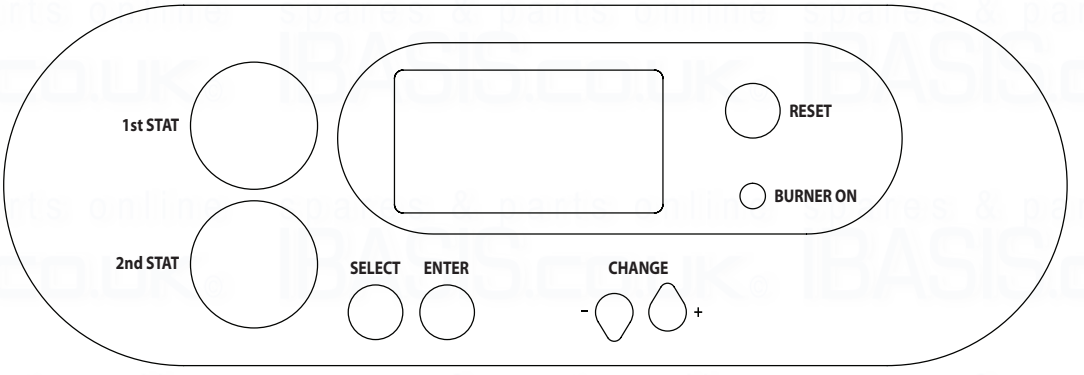

KESTON HEAT USER INTERFACE

Mains On
When the mains to the boiler is switched on a screen similar to the following will be displayed
The designation at the end of the bottom line indicates whether the boiler is suitable for Natural Gas.

Keston
Initialising Please Wait
U/I PCB 330.E18
Pri' PCB 00.54 Nat Gas

Standby Mode
If the boiler has been switched to Standby Mode the following screen will be displayed
No Boiler operation will take place with this setting. See Frame 36 to change to Summer or Winter setting

Standby Mode
For Central Heating
select Winter Mode
For Hot Water
select Summer or Winter

Summer Mode
If the boiler has been switched to Summer Mode a screen similar to the following will be displayed (line 5 may vary depending on setup)
Domestic Hot Water operation will take place with this setting but Central Heating will not.
See Frame 36 to enable Central Heating by changing to Winter setting

Summer Mode
For Central Heating
select Winter Mode
No Hot Water Demand
Switched Live 2 Off

Winter Mode
If there is no current Heat Demand a screen similar to the following will be displayed (line 5 may vary depending on setup)
Line 5 indicates "Switched Live" or "OpenTherm" or "0-10V" depending on which controls are connected to the boiler

Winter Mode
No Central Heating
Demand
No Hot Water Demand
Switched Live 1 Off

Domestic Hot Water Mode (DHW Thermostat)
If there is an ongoing Domestic Hot Water Demand using a DHW Thermostat, screens similar to the following will be displayed
Line 2 indicates whether Switched Live or OpenTherm is controlling the boiler
Line 3 indicates the current operating State (Pre-Purge or Ignition or Burner On or Pump Overrun)
Burner Power and Flow Temperature will vary as the boiler operates

DHW 230V Operation
Switched Live 2 On
Burner On
DHW Thermostat
Flow Temp 80°C

↔

DHW 230V Operation
Burner Power 100%
Burner On
DHW Thermostat
Flow Temp 80°C

Domestic Hot Water Mode (DHW Thermistor)
If there is an ongoing Domestic Hot Water Demand using a DHW Thermistor, screens similar to the following will be displayed
Line 2 indicates whether Switched Live or OpenTherm is controlling the boiler
Line 3 indicates the current operating State (Pre-Purge or Ignition or Burner On or Pump Overrun)
Burner Power and Hot Water Temp' will vary as the boiler operates
See Frame 36 for adjusting DHW Setpoint
See Frame 41 for configuring the boiler to use a DHW Thermistor

DHW 230V Operation
Switched Live 2 On
Burner On
DHW Setpoint 65°C
Hot Water Temp' 65°C

↔

DHW 230V Operation
Burner Power 100%
Burner On
DHW Setpoint 65°C
Hot Water Temp' 65°C

continued . . . . . .

35 BASIC CONTROLS DISPLAY CONTINUED.....

Central Heating Mode
If there is an ongoing Central Heating Demand screens similar to the following will be displayed
Line 2 indicates whether Switched Live 1, 2 or OpenTherm is controlling the boiler
Line 3 indicates the current operating State (Pre-Purge or Ignition or Burner On or Pump Overrun)
Outside temperature will only be shown if an outside sensor is connected to the boiler
Burner Power and Flow Temp will vary as the boiler operates
See Frame 36 for adjusting Flow Setpoint

CH 230V Operation	
Switched Live 1 On	
Burner On	
Flow Setpoint	80°C
Flow Temp	80°C

Central Heating	
Burner Power	100%
Outside Temp'	10°C
Flow Setpoint	80°C
Flow Temp	80°C

Boiler Frost Protection Mode
If the boiler flow temperature drops below 5°C screens similar to the following will be displayed
Line 3 indicates the current operating State (Pre-Purge or Ignition or Burner On or Pump Overrun)
Outside temperature will only be shown if an outside sensor is connected to the boiler
Burner Power and Flow Temp will vary as the boiler operates

Boiler Frost Protect	
Burner Power	100%
Burner On	
Frost Setpoint	5°C
Flow Temp	80°C

Boiler Frost Protect	
Burner Power	100%
Outside Temp'	10°C
Frost Setpoint	5°C
Flow Temp	80°C

System Frost Protection Mode
If an Outside Sensor is fitted and the Outside Temperature drops below the system frost protection temperture setpoint a screen similar to the following will be displayed
Line 3 indicates the current operating State (Pre-Purge or Ignition or Burner On or Pump Overrun)
Flow Temperature and Outside Temperature will vary as the boiler operates
See Frame 40 for adjusting the system frost protection temperature setpoint.

System Frost Protect	
Flow Temp	80°C
Burner On	
Frost Setpoint	-10°C
Outside Temp'	10°C

Cylinder Frost Protection Mode
If a Domestic Hot Water Thermistor is connected to the boiler and the DHW temperature drops below 5C a screen similar to the following will be displayed
Line 3 indicates the current operating State (Pre-Purge or Ignition or Burner On or Pump Overrun)
Burner Power, Hot Water Temp' and Outside Temp' will vary as the boiler operates
Outside temperature will only be shown if an outside sensor is connected to the boiler

Cylinder Frost Protect	
Burner Power	100%
Burner On	
Frost Setpoint	5°C
Hot Water Temp'	4°C

Cylinder Frost Protect	
Burner Power	100%
Outside Temp'	10°C
Frost Setpoint	5°C
Hot Water Temp'	4°C

0-10V Capacity Operating Mode
If 0-10V Capacity operation is ongoing screens similar to the following will be displayed
Line 3 indicates the current operating State (Pre-Purge or Ignition or Burner On or Pump Overrun)
Flow Temp' and Burner Power will vary as the boiler operates
0-10V Input and Burner Setpoint Target will vary as the external Building Management System controls them
See Frame 38 for configuring the boiler for 0-10V Capacity Operation

0-10V Operation	
0-10V Input =	10.0V
Burner On	
Burner Setpoint Target	100%
Flow Temp	80°C

0-10V Operation	
Burner Power	100%
Burner On	
Burner Setpoint Target	100%
Flow Temp	80°C

0-10V Temperature Operating Mode
If 0-10V Temperature operation is ongoing screens similar to the following will be displayed
Line 3 indicates the current operating State (Pre-Purge or Ignition or Burner On or Pump Overrun)
Flow Temp' and Burner Power will vary as the boiler operates
0-10V Input and Flow Setpoint will vary as the external Building Management System controls them.
See Frame 38 for configuring the boiler for 0-10V Temperature Operation.

0-10V Operation	
0-10V Input =	10.0V
Burner On	
Flow Setpoint	80°C
Flow Temp	80°C

0-10V Operation	
Burner Power	100%
Burner On	
Flow Setpoint	80°C
Flow Temp	80°C

continued . . . . . .

36 KESTON HEAT USER INTERFACE - BASIC OPERATING INSTRUCTIONS

SETTING STAT 1 TEMPERATURE

Rotate 1st Stat and the following screen will be displayed

Stat 1 Temp'

80°C

Rotate the knob until the desired temperature is shown and then press ENTER to store

SETTING STAT 2 TEMPERATURE

Rotate 2nd Stat and the following screen will be displayed

Stat 2 Temp'

65°C

Rotate the knob until the desired termperature is shown and then press ENTER to store

SETTING SUMMER, WINTER AND STANDBY OPERATION

Note that Standby Mode will disable Domestic Hot Water and Central Heating, Summer Mode will disable Central Heating

Press SELECT and a screen similar to the following will be displayed The kW output number in the 1st line will vary depending the maximum output of the boiler

Keston 45kW

Normal Operation
Set Stat 1 Temp'
Set Stat 2 Temp'

Rotate 1st Stat clockwise until a screen similar to following is displayed

Keston 45kW
Set Stat 2 Temp'
Set Off/Sum/Win
Out' Sensor Slope
Normal Operation

Press SELECT and a screen similar to the following will be displayed

Set Off/Sum/Win
Standby
Summer
Winter
Press - for more

Press + and - to change to required setting, press ENTER to store

Rotate the KNOB anti-clockwise until Normal Operation is highlighted again and press SELECT to return to normal operation

SETTING THE OUTSIDE SENSOR SLOPE

Note that an Outside Sensor must be fitted to the boiler for this feature to be active (this will be detected automatically)

Press SELECT and a screen similar to the following will be displayed

The kW output number in the 1st line will vary depending on the maximum output of the boiler

Keston 45kW

Normal Operation
Set Stat 1 Temp'
Set Stat 2 Temp'

Rotate 1st stat clockwise until a screen similar to following is displayed

Keston 45kW
Set Off/Sum/Win
Out' Sensor Slope
State of Inputs
State of Outputs

Press SELECT and a screen similar to the following will be displayed

Out' Sensor Slope

1.5

Note that a higher number gives a higher room temperature and a lower number gives a lower room temperature

Press + and - to change to required setting, press ENTER to store

Rotate the KNOB anti-clockwise until Normal Operation is highlighted again and press SELECT to return to normal operation

continued . . . . . .

37 KESTON HEAT USER INTERFACE - BASIC OPERATING INSTRUCTIONS CONTINUED...

VIEWING THE STATE OF THE BOILER INPUTS

Press SELECT and a screen similar to the following will be displayed The kW output number in the 1st line will vary depending the maximum output of the boiler

```
Keston 45kW

Normal Operation
Set Stat 1 Temp'
Set Stat 2 Temp'
```

Rotate 1st stat clockwise until a screen similar to the following is displayed

```
Keston 45kW
Out' Sensor Slope
State of Inputs
State of Outputs
Fault History
```

Press SELECT and a screen similar to the following will be displayed

```
State of Inputs
Flow Temp'          80ºC
Return Temp'        60ºC
Flue Temperature    70ºC
Press - for more
```

The state of the iniputs will vary as the boiler operates

Press SELECT to exit this option

Rotate the KNOB anti-clockwise until Normal Operation is highlighted again and press SELECT to return to normal operation

VIEWING THE STATE OF THE BOILER OUTPUTS

Press SELECT and a screen similar to the following will be displayed The kW output number in the 1st line will vary depending the maximum output of the boiler

```
Keston 45kW

Normal Operation
Set Stat 1 Temp'
Set Stat 2 Temp'
```

Rotate 1st stat clockwise until a screen similar to the following is displayed

```
Keston Heat
State of Inputs
State of Outputs
Fault History
Show Hours Run
```

Press SELECT and a screen similar to the following will be displayed

```
State of Outputs
Boiler Pump         On
DHW Pump/Valve      Off
Fan                 3000rpm
Press - for more
```

The state of the outputs will vary as the boiler operates

Press SELECT to exit this option

Rotate the KNOB anti-clockwise until Normal Operation is highlighted again and press SELECT to return to normal operation

VIEWING THE FAULT HISTORY OF THE BOILER

Press SELECT and a screen similar to the following will be displayed The kW output number in the 1st line will vary depending the maximum output of the boiler

```
Keston 45kW

Normal Operation
Set Stat 1 Temp'
Set Stat 2 Temp'
```

Rotate 1st stat clockwise until a screen similar to the following is displayed

```
Keston 45kW
State of Outputs
Fault History
Show Hours Run
Normal Operation
```

Press SELECT and a screen similar to the following will be displayed

```
Fault History: Max 10
Fault 1 [Latest]
Ignition Lockout [16]
23 days ago
Press - for more
```

The Fault History will vary depending on the operation of the boiler

Press SELECT to exit this option

Rotate the KNOB anti-clockwise until Normal Operation is highlighted again and press SELECT to return to normal operation

VIEWING THE BOILER HOURS RUN

Press SELECT and a screen similar to the following will be displayed The kW output number in the 1st line will vary depending the maximum output of the boiler

```
Keston 45kW

Normal Operation
Set Stat 1 Temp'
Set Stat 2 Temp'
```

Rotate 1st stat clockwise until a screen similar to following is displayed

```
Keston 45kW
Fault History
Show Hours Run
Normal Operation
```

Press SELECT and a screen similar to the following will be displayed

```
Show Hours Run

Total Hours   20 h
Flame On      10 h
```

The times will vary depending on the operation of the boiler

Press SELECT to exit this option

Rotate the KNOB anti-clockwise until Normal Operation is highlighted again and press SELECT to return to normal operation

continued . . . . . .

38 KESTON HEAT USER INTERFACE - ADVANCED OPERATING INSTRUCTIONS

SETTING TO 0-10V

Press SELECT and then hold + and - down together for more than 5s, the following screen will be displayed

Installer Mode
Normal Operation
Set Stat 1 Temp'
Set Stat 2 Temp'

Rotate the 1st stat clockwise until the following screen is displayed

Installer Mode
Show Hours Run
Set to 0-10V Input
Set Night Setback
DHW Pump / Valve

Press SELECT and the following screen will be displayed

Set to 0-10V Input
0-10V Off
0-10V Capacity
0-10V Temperature

Press + and - to change to the required setting and then press ENTER to store
Rotate the KNOB anti-clockwise until Normal Operation is highlighted again and press SELECT to return to normal operation

0-10V Capacity Control is governed by the following relationship

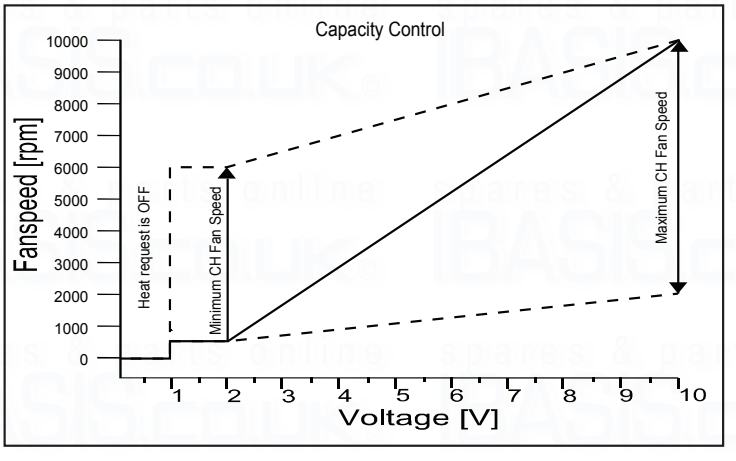

0-10V Temperature Control is governed by the following relationship

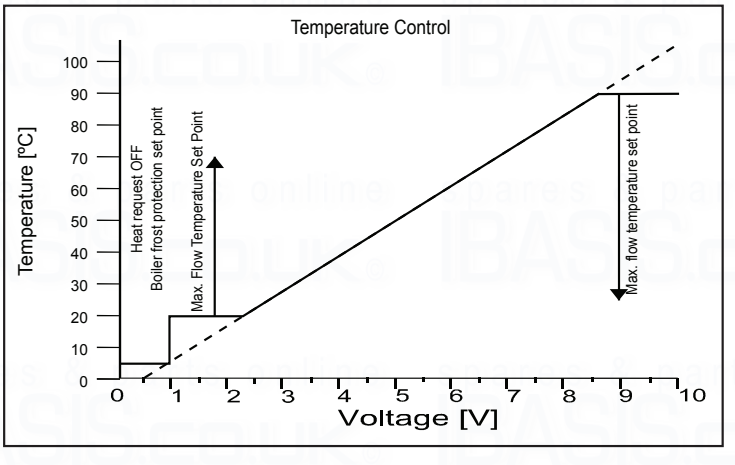

continued . . . . . .

39 KESTON HEAT USER INTERFACE - ADVANCED OPERATING INSTRUCTIONS CONTINUED....

ENABLING NIGHT SETBACK

Note- Night Setback is only operational if Outside Sensor has been connected
When Night Setback is enabled the boiler will run at the normal flow temp. during CH Demand and reduced temperature when for no demand

Press SELECT and then hold + and - down together for more than 5s, the following screen will be displayed

Installer Mode
Normal Operation
Set Stat 1 Temp'
Set Stat 2 Temp'

Rotate the 1st stat clockwise until the following screen is displayed

Installer Mode
Set to 0-10V Input
Set Night Setback
DHW Pump / Valve
Set Booster

Press SELECT and the following screen will be displayed

Set Night Setback
On
Off

Press + and - to change to required setting and then press ENTER to store
Rotate the KNOB anti-clockwise until Normal Operation is highlighted again and press SELECT to return to normal operation

ENABLING VALVE POWER OPEN/VALVE POWER CLOSED/SHUNT PUMP

The boiler default setting is that the boiler pump is always on if a heat demand is present and that a diverter valve can be controlled from the diverter valve / system pump connections. This can be changed so that the diverter valve / system pump connects to a control system pump (set for shunt pump).

Press SELECT and then hold + and - down together for more than 5s, the following screen will be displayed

Installer Mode
Normal Operation
Set Stat 1 Temp'
Set Stat 2 Temp'

Rotate the 1st stat clockwise until the following screen is displayed

Installer Mode
Set Night Setback
DHW Pump/Valve
Set Booster
Stat 1 - 2 Priority

Press SELECT and the following screen will be displayed

DHW Pump/Valve
Pump
Valve Power Open
Press - for more

Press + and - to change to the required setting and then press ENTER to store

Rotate the KNOB anti-clockwise until Normal Operation is highlighted again and press SELECT to return to normal operation

Note- Booster Function is only operational if Outside Sensor has been connected
If Booster function is enabled and CH Demand is ongoing for more than 10 minutes then the Flow Temp. target is increased by 10°C
When the Burner switches off the temperature is reset

Press SELECT and then hold + and - down together for more than 5s, the following screen will be displayed

Installer Mode
Normal Operation
Set Stat 1 Temp'
Set Stat 2 Temp'

Rotate the 1st stat clockwise until the following screen is displayed

Installer Mode
DHW Pump / Valve
Set Booster
Stat 1-2 Priority
Set Max Flow Temp'

Press SELECT and the following screen will be displayed

Set Booster
On
Off

Press + and - to change to required setting then press ENTER to store
Rotate the KNOB anti-clockwise until Normal Operation is highlighted again and press SELECT to return to normal operation

CHANGING CH / DHW PRIORITY

The boiler default setting is DHW always has priority ahead of CH
It is possible to change this so CH always has priority ahead of DHW or the boiler alternates between DHW and CH every 10 mins
Press SELECT and then hold + and - down together for more than 5s, the following screen will be displayed

Installer Mode
Normal Operation
Set Stat 1 Temp'
Set Stat 2 Temp'

Rotate the 1st stat clockwise until the following screen is displayed

Installer Mode
Set Booster
Stat 1-2 Priority
Set Max Flow Temp'
Set Min Flow Temp'

Press SELECT and the following screen will be displayed

CH/DHW Priority
Priority = Stat 2
Priority = Stat 1
Priority = Equal

Press + and - to change to the required setting and then press ENTER to store

Rotate the KNOB clockwise until Normal Operation is highlighted again and press SELECT to return to normal operation

continued . . . . . .

40 KESTON HEAT USER INTERFACE - ADVANCED OPERATING INSTRUCTIONS

CHANGING THE MAXIMUM FLOW TEMPERATURE SETPOINT

Boiler default setting is that maximum flow temperature setpoint is 82°C
This feature limits the maximum flow temperature that can be set in the Basic Operating Mode

Press SELECT and then hold + and - down together for more than 5s, the following screen will be displayed

Installer Mode
Normal Operation
Set Stat 1 Temp'
Set Stat 2 Temp'

Rotate the 1st stat clockwise until the following screen is displayed

Installer Mode
Stat 1-2 Priority
Set Max Flow Temp'
Set Min Flow Temp'
Sys Frost Protect

Press SELECT and the following screen will be displayed

Set Max Flow Temp'
80°C

Press + and - to change to the required setting and then press ENTER to store

Rotate the KNOB clockwise until Normal Operation is highlighted again and press SELECT to return to normal operation

CHANGING THE MINIMUM FLOW TEMPERATURE SETPOINT

Boiler default setting is that minimum flow temperature setpoint is 30°C
This feature limits the minimum flow temperature that can be set in the Basic Operating Mode
Press SELECT and then hold + and - down together for more than 5s, the following screen will be displayed

Installer Mode
Normal Operation
Set Stat 1 Temp'
Set Stat 2 Temp'

Rotate the 1st Stat clockwise until the following screen is displayed

Installer Mode
Set Max Flow Temp'
Set Min Flow Temp'
Sys Frost Protect
Soft Start Time

Press SELECT and the following screen will be displayed

Set Max Flow Temp'
30°C

Press + and - to change to the required setting and then press ENTER to store

Rotate the KNOB clockwise until Normal Operation is highlighted again and press SELECT to return to normal operation

CHANGING THE SYSTEM FROST PROTECTION TEMP. SETPOINT

Note that System Frost Protection Function is only operational if an Outside Sensor has been connected
The CH pump is switched on if the Outside Temp. is less than the System Frost Protection Temp.
The CH pump is switched off if the Outside Temp. is more than the System Frost Protection Temp. +5°C
The boiler default setting is the system frost protection temp. setpoint is -10°C

Press SELECT and then hold + and - down together for more than 5s, the following screen will be displayed

Installer Mode
Normal Operation
Set Stat 1 Temp'
Set Stat 2 Temp'

Rotate the 1st stat clockwise until the following screen is displayed

Installer Mode
Set Min Flow Temp'
Sys Frost Protect
Soft Start Time
O/S Room Temp'

Press SELECT and the following screen will be displayed

Sys Frost Protect
-10°C

Press + and - to change to required setting, press ENTER to store
Rotate the KNOB clockwise until Normal Operation is highlighted again and press SELECT to return to normal operation

CHANGING THE SOFT START TIME

The Soft Start Time is the time for which the boiler will run at the ignition rate after a flame is detected
This feature helps make the boiler fully compatible with the CH/DHW system. The default Soft Start time is 60s
Care should be taken in adjusting this feature as system noise and/or boiler lockout could occur

Press SELECT and then hold + and - down together for more than 5s, the following screen will be displayed

Installer Mode
Normal Operation
Set Stat 1 Temp'
Set Stat 2 Temp'

Rotate the 1st stat clockwise until the following screen is displayed

Installer Mode
Sys Frost Protect
Soft Start Time
O/S Room Temp'
DHW Sensor

Press SELECT and the following screen will be displayed

Soft Start Time
5s

Press + and - to change to required setting then press ENTER to store
Rotate the KNOB clockwise until Normal Operation is highlighted again and press SELECT to return to normal operation
Note that the minimum setpoint after adjustment is 60s

continued . . . . . .

41 KESTON HEAT USER INTERFACE - ADVANCED OPERATING INSTRUCTIONS CONTINUED....

CHANGING THE NOMINAL ROOM TEMPERATURE ACHIEVED DURING OUTSIDE SENSOR OPERATION (O/S ROOM TEMP')

Note that the O/S Room Temp' Function is only operational if an Outside Sensor has been connected
The O/S Room Temp' is the notional room temperature that the boiler will try to achieve under Weather Compensation operation
The default O/S Room Temp' is 20°C

Press SELECT and then hold + and - down together for more than 5s, the following screen will be displayed

Installer Mode
Normal Operation
Set Stat 1 Temp'
Set Stat 2 Temp'

Rotate the 1st stat clockwise until the following screen is displayed

Installer Mode
Soft Start Time
O/S Room Temp'
DHW Sensor
Factory Settings

Press SELECT and the following screen will be displayed

O/S Room Temp'
20ºC

Press + and - to change to required setting, press ENTER to store

Rotate the KNOB clockwise until Normal Operation is highlighted again and press SELECT to return to normal operation

ENABLING THE DOMESTIC HOT WATER THERMISTOR

The default is for a DHW Heat Demand to be indicated by a DHW Thermostat providing a 230V input to the DHW Switched Live
Instead a DHW Thermistor, available as a kit from Keston, can be connected to the DHW Thermistor input

Rotate the 1st stat clockwise until the following screen is displayed

Installer Mode
Normal Operation
Set Stat 1 Temp'
Set Stat 2 Temp'

Rotate the KNOB clockwise until the following screen is displayed

Installer Mode
O/S Room Temp'
DHW Sensor
Factory Settings
Anti-Legion Temp'

Press SELECT and the following screen will be displayed

DHW Sensor
Heating Only
DHW Thermistor
DHW Switched Live

Press + and - to change to the required setting and then press ENTER to store
Rotate the KNOB clockwise until Normal Operation is highlighted again and press SELECT to return to normal operation

REVERTING TO FACTORY SETTINGS

Press SELECT, hold + and - together for more than 5s, the following screen will be displayed

Installer Mode
Normal Operation
Set Stat 1 Temp'
Set Stat 2 Temp'

Rotate the 1st stat clockwise until the following screen is displayed

Installer Mode
DHW Sensor
Factory Settings
Anti-Legion Temp'
Anti-Legion Enable

Press SELECT and the following screen will be displayed

Factory Settings
Reset?

Press ENTER and a screen similar to the following will be displayed

Factory Settings
Are you sure?
Press Enter to Reset
Press Select not to
Reset

Press ENTER and a screen similar to the following will be displayed

Factory Settings
Reset?

Press Select then Rotate the KNOB clockwise until Normal Operation is highlighted again and press SELECT to return to normal operation

CHANGING THE ANTI-LEGIONELLA TEMPERATURE

Note Anti-Legionella Temp. Function is only operational if a DHW Thermistor has been connected
Care should be taken reducing this temp. as unsafe condition could result

Press SELECT and then hold + and - down together for more than 5s, the following screen will be displayed

Installer Mode
Normal Operation
Set Stat 1 Temp'
Set Stat 2 Temp'

Rotate the 1st stat clockwise until the following screen is displayed

Installer Mode
Factory Settings
Anti-Legion Temp'
Anti-Legion Enable
BUS Address

Press SELECT and the following screen will be displayed

Anti-Legion Temp'
70°C

Press + and - to change to required setting, press ENTER to store
Rotate the KNOB clockwise until Normal Operation is highlighted again and press SELECT to return to normal operation

continued . . . . . .

spares & parts online IBASIS.COUK

42 KESTON HEAT USER INTERFACE - ADVANCED OPERATING INSTRUCTIONS CONT'D....

DISABLING THE ANTI-LEGIONELLA FUNCTION

Note that the Anti-Legionella Temperature Function is only operational if a Domestic Hot Water Thermistor has been connected Care should be taken in disabling this function as an unsafe condition could result

Press SELECT and then hold + and - down together for more than 5s, the following screen will be displayed

Installer Mode
Normal Operation
Set Stat 1 Temp'
Set Stat 2 Temp'

Rotate the 1st stat clockwise until the following screen is displayed

Installer Mode
Anti-Legion Temp'
Anti-Legion Enable
BUS Address
Flame/Relay

Press SELECT and the following screen will be displayed

Anti-Legion Enable
On
Off

Press + and - to change to required setting then press ENTER to store Rotate the KNOB clockwise until Normal Operation is highlighted again and press SELECT to return to normal operation

continued . . . . . .

43 KESTON HEAT WITH S PLAN SYSTEM

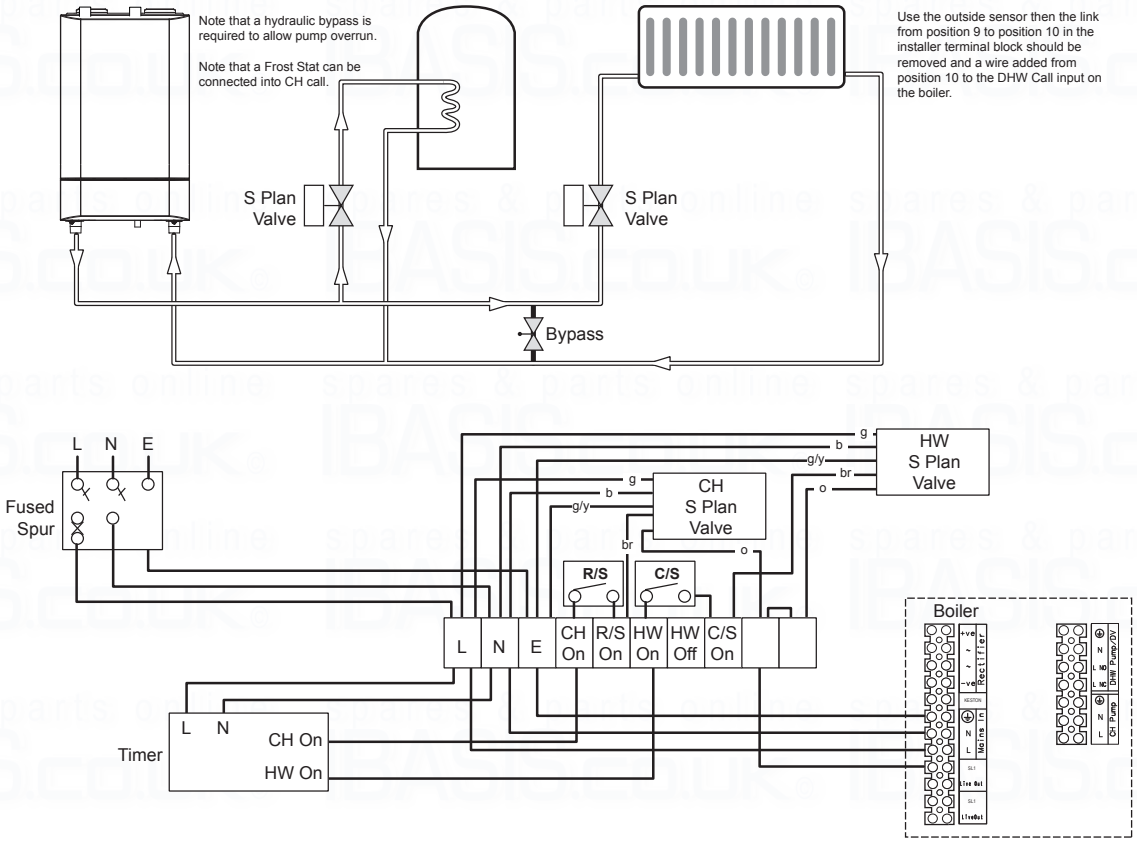

44 KESTON HEAT WITH Y PLAN SYSTEM

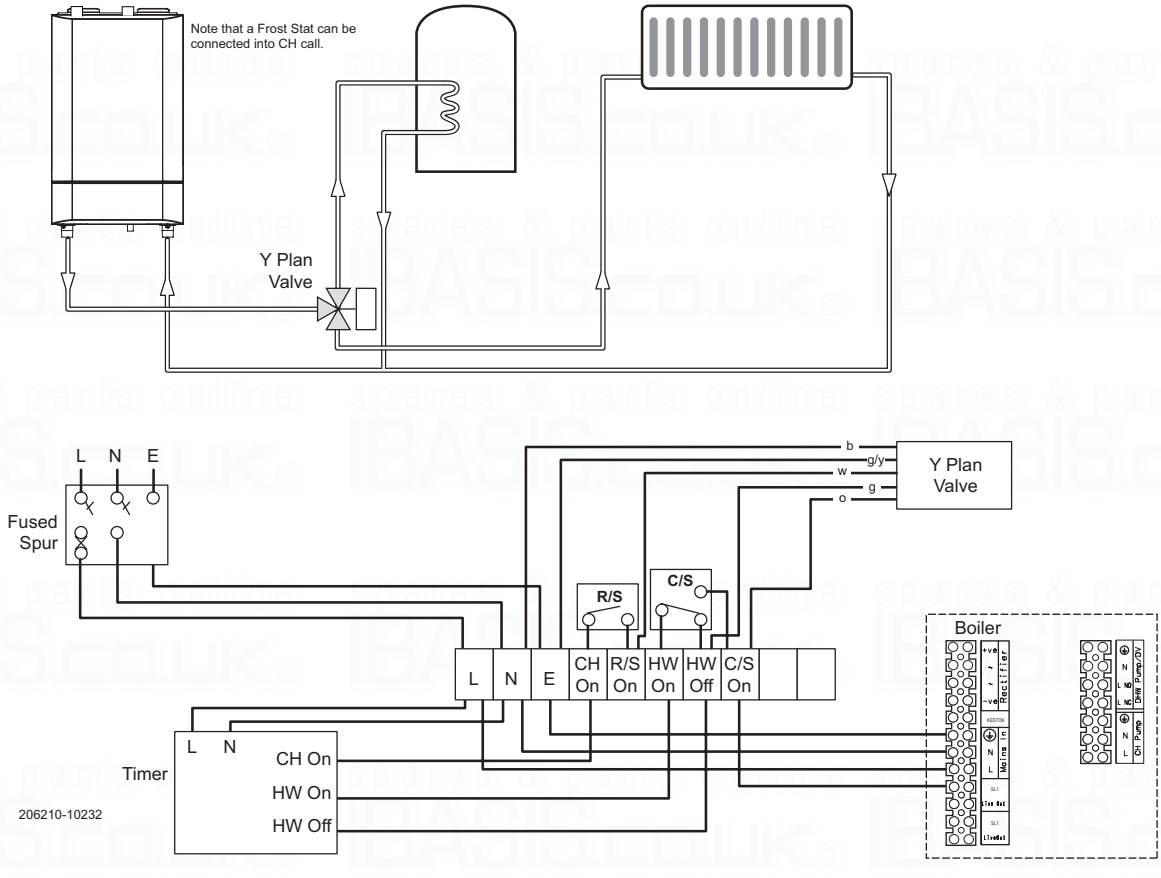

45 KESTON HEAT WITH BOILER CONTROL OF PUMP AND DIVERTER VALVE

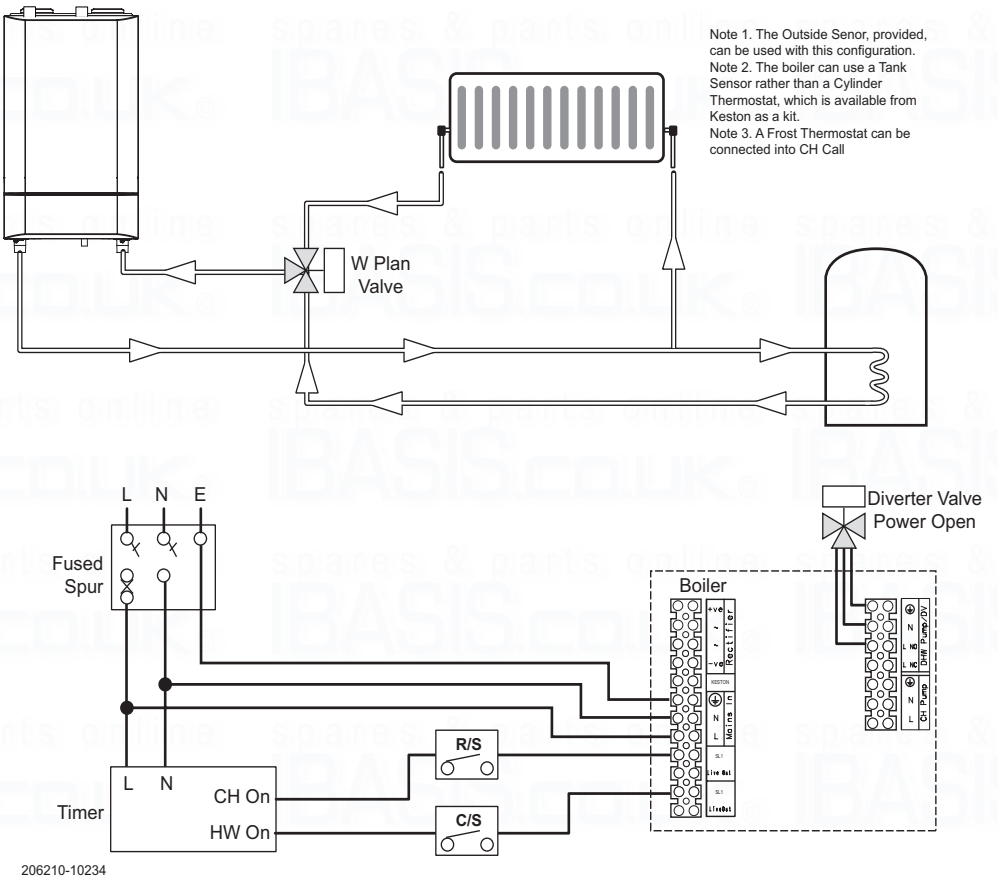

46 KESTON HEAT WITH SINGLE LOW LOSS HEADER

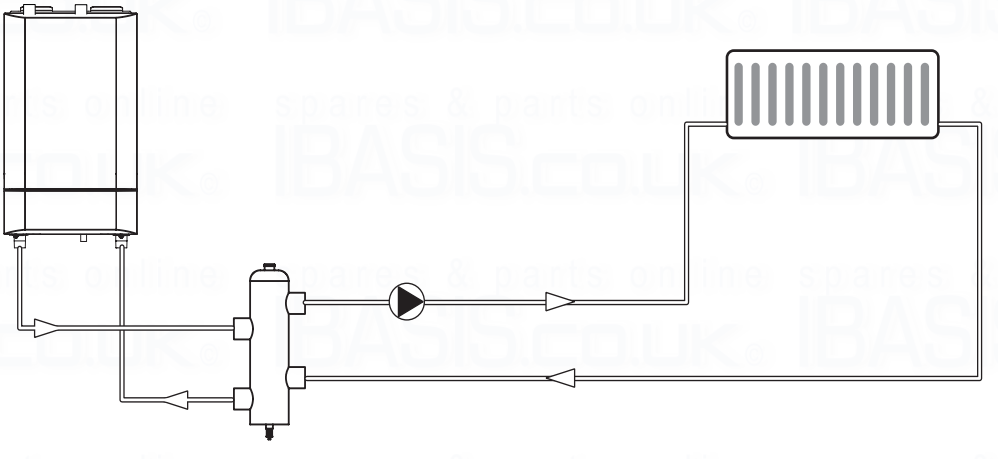

47 KESTON HEAT WITH EXTERNAL CONTROLS VIA SWITCHED LIVE, 0-10V INPUT OR OPENTHERM

EXTERNAL CONTROLS VIA SWITCHED LIVE

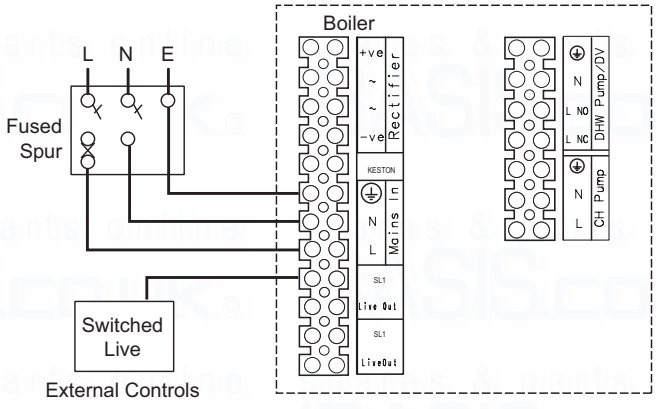

Notes.
1. The boiler will automatically configure itself to a Switched Live input.
2. The Switched Live must be from the same phase as the boiler mains supply.
3. A Frost Thermostat can be connected into the CH Call Input.

EXTERNAL CONTROLS VIA 0-10V INPUT

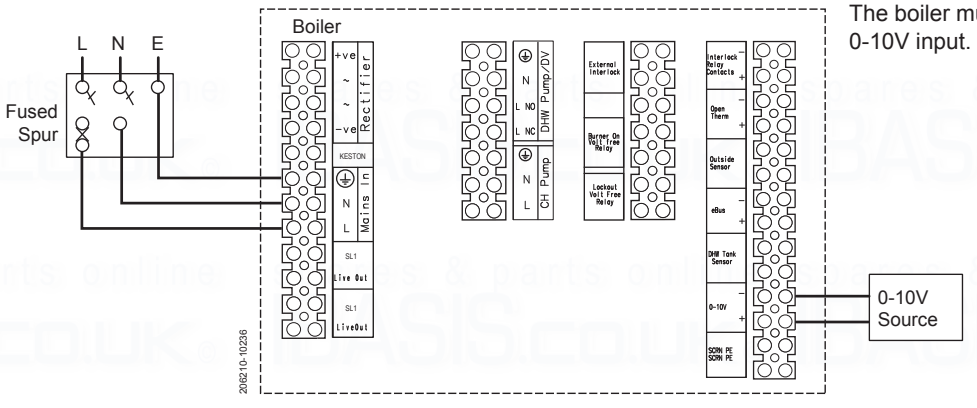

The boiler must be set fpr 0-10V input. (See Frame 38)

EXTERNAL CONTROLS VIA OPENTHERM

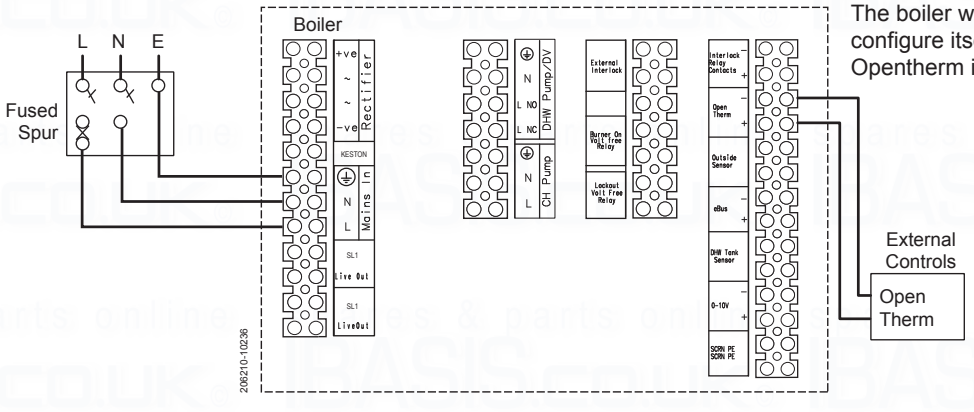

The boiler will automatically configure itself to an Opentherm input.

48 KESTON HEAT WITH OPENTHERM 2 CHANNEL PROGRAMMABLE ROOM STAT

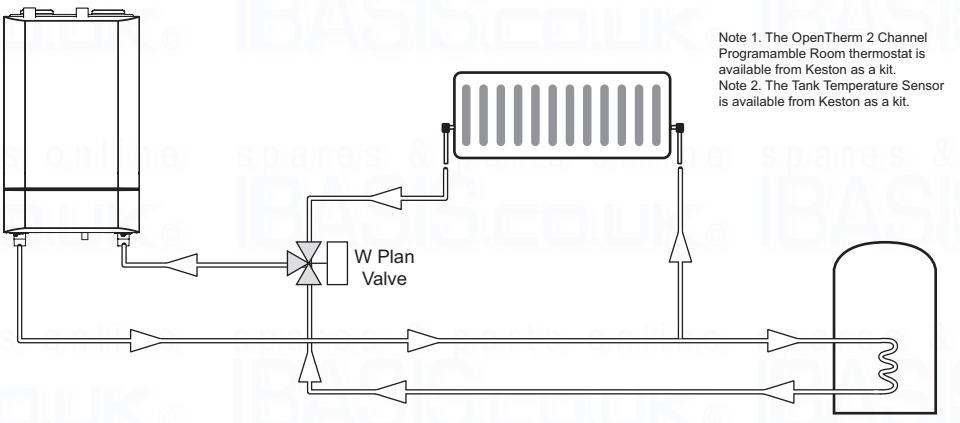

Note 1. The OpenTherm 2 Channel Programamble Room thermostat is available from Keston as a kit.
Note 2. The Tank Temperature Sensor is available from Keston as a kit.

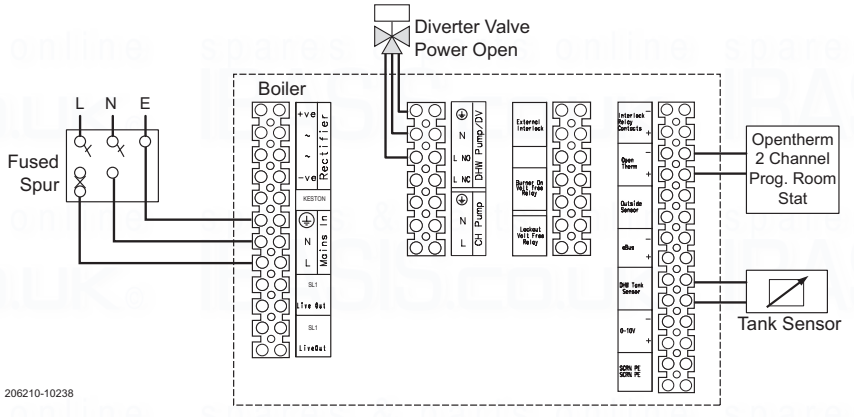

49 COMMISSIONING AND TESTING

A. ELECTRICAL INSTALLATION

1. Checks to ensure electrical safety should be carried out by a competent person.
2. ALWAYS carry out the preliminary electrical system checks, i.e. earth continuity, polarity, resistance to earth and short circuit, using a suitable meter.

B. GAS INSTALLATION

1. The whole of the gas installation, including the meter, should be inspected and tested for soundness and then purged in accordance with the recommendations of the relevant standards listed on page 4, by the installer.

   In IE refer to I.S.813:2002.

WARNING. *Whilst effecting the required gas soundness test and purging air from the gas installation, open all windows and doors, extinguish naked lights and DO NOT SMOKE.*

50 INITIAL LIGHTING

1. Check that the system has been filled and the boiler is not air locked - air in the boiler could damage the heat exchanger. For this reason the airvent located in the left top side must never be shut off.
2. Check that all the drain cocks are closed and any valves in the flow and return are open.
3. Check that the GAS SERVICE COCK IS ON.
4. Fill the condensate trap with water before putting the unit into operation (see Frame 60 for condensate trap removal).
5. Check the indication on the pressure gauge. If the pressure is less than 1 bar the installation should be filled up first (sealed system only).
6. Switch the electricity supply ON and check that all the external controls are calling for heat. Check boiler is set for winter operation - see Keston Heat user interface basic operating instructions.
7. The boiler will commence the ignition sequence. If after 5 attempts the boiler has failed to light then it will lock out. Press the reset button to restart the ignition sequence.
8. Operate the boiler for 10 minutes and check the gas rate (Table 1). You should be able to read at least 90% of the nominal.

Keston Heat ~ Flue CO_2 % measurements (hot condition)		
	Keston Heat 45	Keston Heat 55
Max Rate ± 0.5%	9.3%	9.5
Min Rate ± 0.5%	8.4%	8.4

OPERATING SEQUENCE

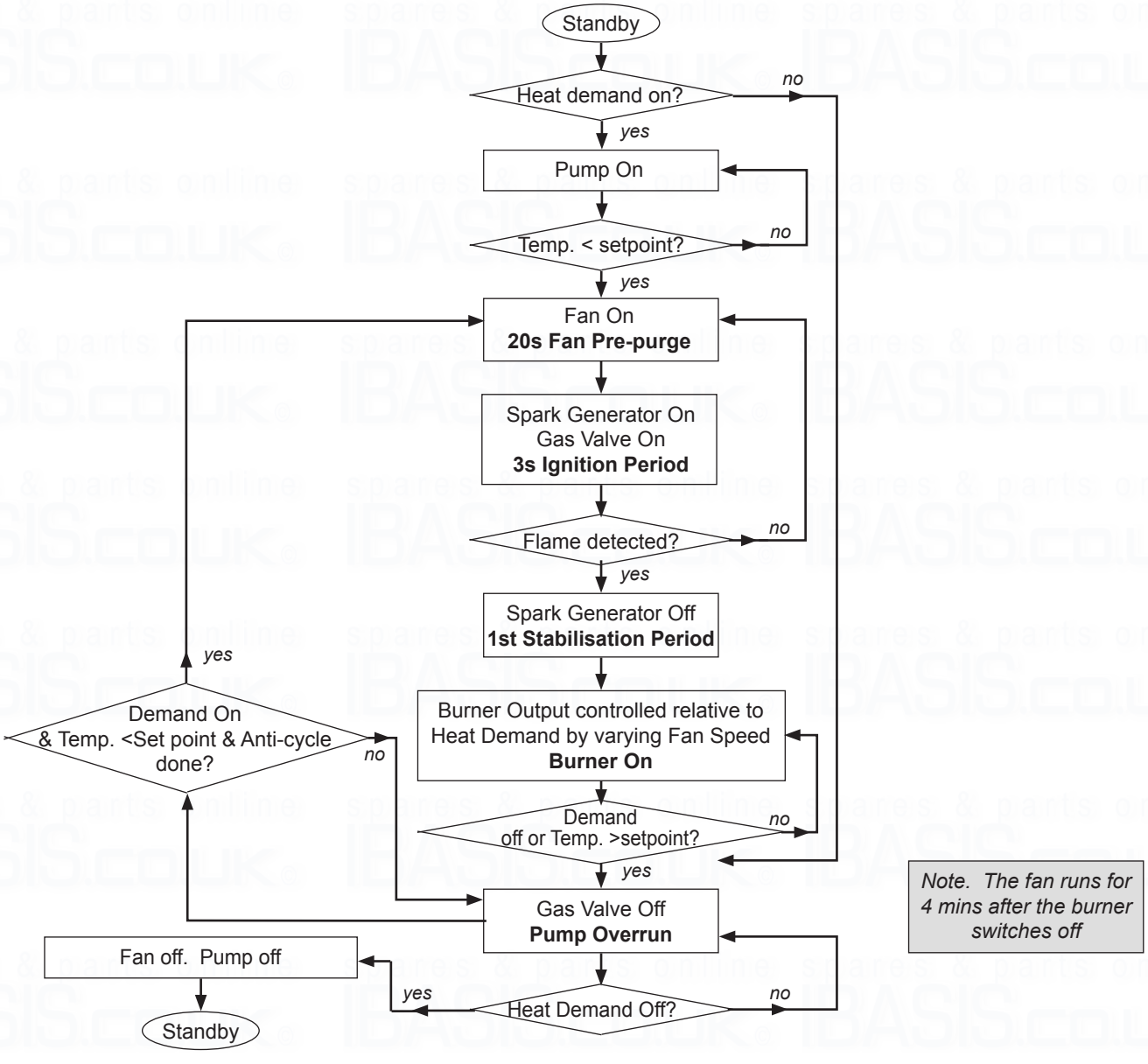

51 GENERAL CHECKS

Make the following checks for correct operation.

1. The correct operation of ANY secondary system controls should be proved. Operate each control separately and check that the main burner or circulating pump, as the case may be, responds.
2. Water circulation system;
   - **a.** With the system HOT examine all water connections for soundness.
   - **b.** With the system still HOT, turn off the gas, water and electricity supplies to the boiler and drain down to complete the flushing process.
   - **c.** Refill and vent the system, clear all air locks and again check for water soundness.
   - **d.** Balance the system.
3. Check the condensate drain for leaks and check it is discharging correctly.
4. Finally set the controls to the User's requirements.

Note. *If an optional programmer kit is fitted then refer to the instructions supplied with the kit.*

52 HANDING OVER

ROUTINE OPERATION

Full instructions covering routine lighting and operation of the boiler are given on the Lighting and Operation Instruction Label located on the inside of the lower controls door.

Draw the attention of the boiler owner or his representative to the Lighting and Operating Instruction Label. Give a practical demonstration of the lighting and shutting down of the boiler.

Describe the function of the boiler and system controls and show how they are adjusted and used.

Hand these Installation and Servicing Instructions, User's Instructions and Log book to the customer and request him to keep them in a safe place for ready reference. For IE, it is necessary to complete a "Declaration of Conformity" to indicate compliance to the appropriate standard.

IMPORTANT. Point out to the owner that the boiler must have regular maintenance and cleaning, at least annually, in order to ensure reliable and efficient operation. Regular attention will also prolong the life of the boiler and should preferably be performed at the end of the heating season.

After servicing, complete the service section of the log book and return to the owner or their representative.

Recommend that a contract for this work should be made with the regional gas authority or a Gas Safe Registered Engineer. In IE servicing work must be carried out by a competent person.

53 SAFETY

It is the law that any service work must be carried out by a Gas Safe Registered Engineer. In IE service work must be carried out by a competent person.

***WARNING*. Always turn off the gas supply at the gas service cock, and switch off and disconnect the electricity supply to the appliance and any external controls before servicing or replacing components.**

NOTE.

When the burner switch is in the off position the boiler control module remains live.

IMPORTANT.

After completing the servicing or replacement of components always:

- Test for gas soundness.
- Check the water system is correctly filled and free of air. Air in the boiler could cause damage to the heat exchanger. For this reason the automatic air vent in the left top side must never be shut off.
- Check the jacket front panel is correctly fitted, ensuring that a good seal is made. Secure the controls fascia in place.
- With the system hot examine all water connections for soundness.
- Check the gas rate and measure the combustion CO/CO_2 content. The CO/CO_2 ratio of the flue gas should not be greater than 0.004 ratio and the CO_2 should match the values given in Frame 50.
- Carry out functional checks as appropriate.

54 SERVICING SCHEDULE

To ensure the continued safe and efficient operation of the appliance it is recommended that it is checked at regular intervals and serviced as necessary. The frequency of servicing will depend upon the installation condition and usage but should be carried out at least annually.

Keston does not accept any liability resulting from the use of unauthorised parts or the repair and servicing of appliances not carried out in accordance with the Company's recommendations and specifications.

Note.

Some aluminium oxide build-up within the heat exchanger assembly is quite usual with this type of condensing boiler. Though removal and cleaning is recommended annually, the heat exchanger, sump and condensate trap must be inspected and cleaned after a maximum of 2 years operation.

1. Light the boiler and carry out function checks, noting any operational faults.
2. Run the boiler for 5 minutes and then check the gas consumption rate. Refer to procedure opposite on how to force the burner to maximum rate.
3. Optional test - Connect a suitable gas analyser to the sampling point fitted in the flue adapter. For correct boiler operation the CO/CO_2 ratio of the flue gas should not be greater than 0.004 ratio and the CO_2 values should match those in table 1. If this is the case and the gas input is at least 90% of the nominal, once compliance with the note above is ensured, then no further action need be taken. If not proceed to 4.
4. Remove and clean the burner. Refer to Frames 56 and 57.
5. Inspect the heat exchanger through the burner opening. If there are signs of aluminium oxide build up, spray water down the flueways. Refer to Frame 58.
6. Remove the sump cover and scrape out any deposits. Refer to Frame 59.
7. Remove the condensate trap and flush through with water. Refer to Frame 60.
8. Check that the flue terminal is unobstructed and that the flue system is sealed correctly.
9. After completion of servicing refer to Frame 53 for reference to final safety checks.

SETTING TO MAXIMUM OUTPUT

Ensure that there is a current CH demand to the boiler (e.g. the CH Switched Live is on)
Press SELECT and the following screen witll be displayed.
The kW output number in the 1st line will vary depending on the maximum output of the boiler.

Keston 45kW
Normal Operation
Set Stat 1 Temp'
Set Stat 2 Temp'

Rotate 1st stat clockwise until the following screen is displayed

Keston 45kW
Set Stat 2 Temp'
Set Off/Sum/Win
Out' Sensor Slope
State of Inputs

Press SELECT and the following screen will be displayed

Set Off/Sum/Win
Standby
Summer
Winter
Press - for more

Press + and - until the followint screen is displayed.

Set Off/Sum/Win
Minimum
Maximum
Press - for more

Press ENTER and the boiler will go to Maximum Rate for 5 minutes
Operation will be automatically reset at the end of 5 minutes

55 CASING REMOVAL

Front Panels

1. Pull the two sides of the control casing door to open.
2. Remove the two screws retaining the front panel, lift the panel to remove.
3. Remove the two screws retaining the control panel and swing the panel down into the service position.

Side Panels

Note. Removal is not required for normal service.

1. Remove the two (or three) screws from the top and bottom of the side panels.
2. Re-assemble in reverse order.

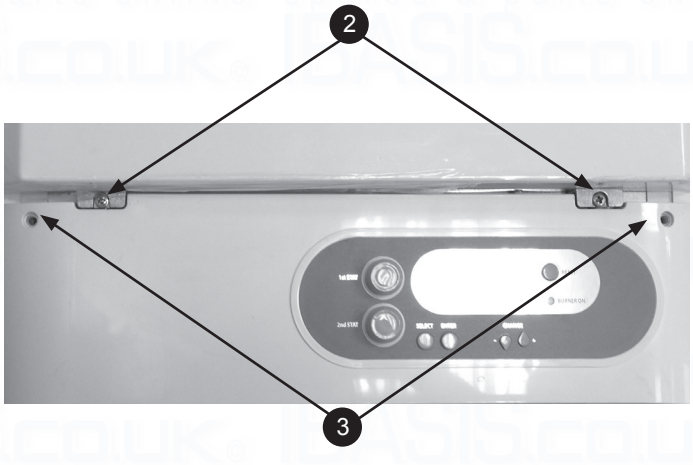

56 REMOVAL OF FAN AND GAS VALVE ASSEMBLY

1. Refer to Frame 53.
2. Remove the upper front panel, Refer to Frame 55.
3. Remove the two screws retaining the flue tube to the heat exchanger.
4. Lift the lower section of flue upwards to disengage from the sump then twist outwards and pull down to completely remove.
5. Disconnect condensate pipe from upper flue elbow.
6. Remove the flue tube elbow fixing screws and remove elbow by pulling downwards.
7. Disconnect the electrical connections from the gas valve/s.
8. Disconnect the electrical connections from the fan.
9. Undo the gas valve union nut/nuts and retain the fibre washer/s.
10. Remove the four nuts/screws retaining the fan assembly and remove the fan assembly.
11. Inspect & clean as necessary.
12. Re-assemble in reverse order replacing all gaskets.

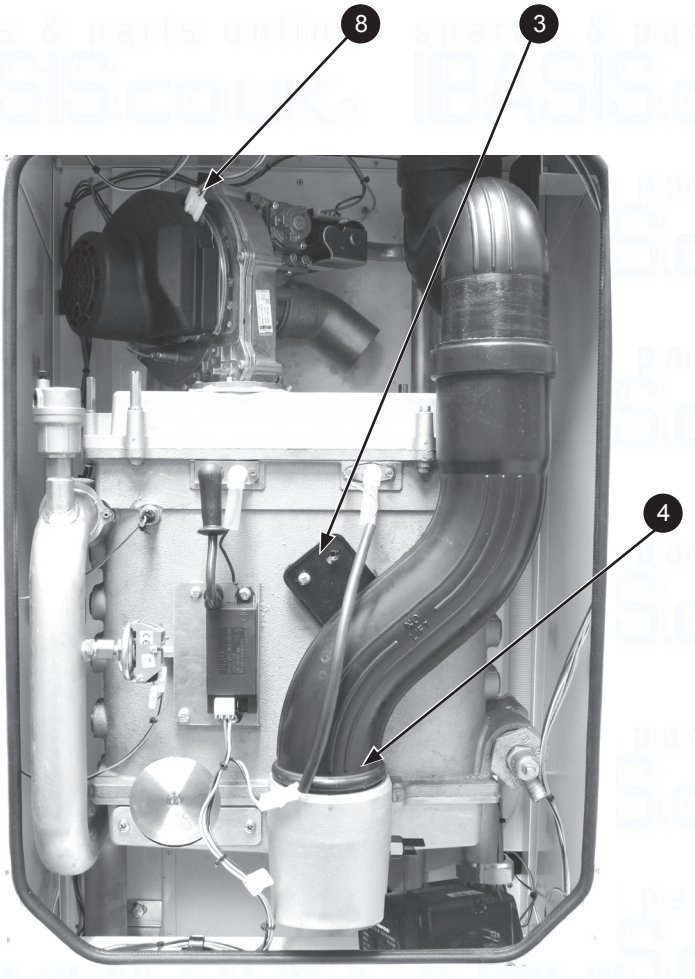

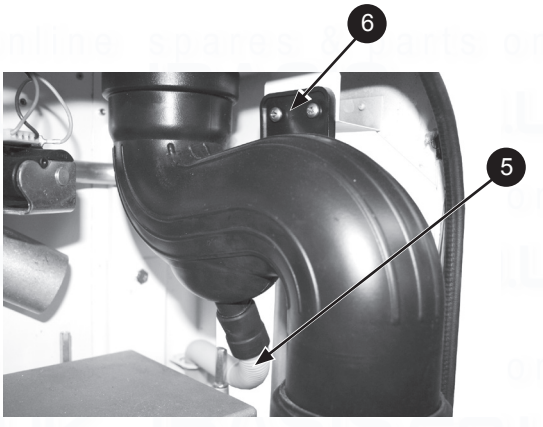

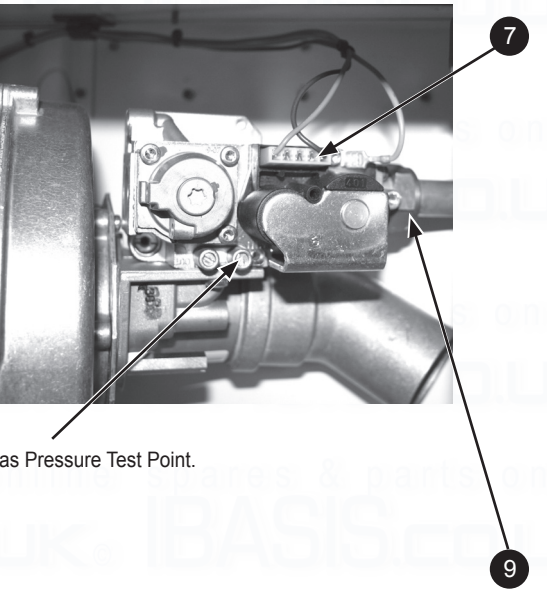

Inlet Gas Pressure Test Point.

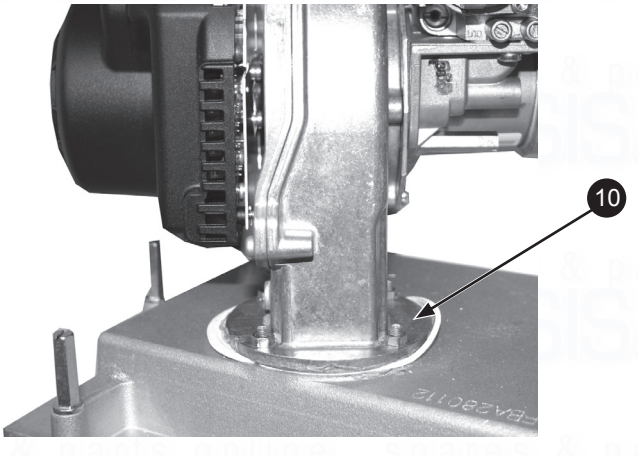

57 BURNER REMOVAL

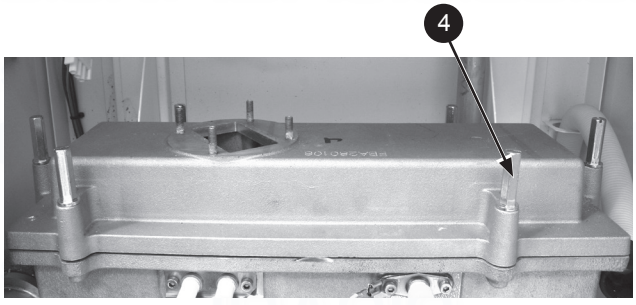

1. Refer to Frame 53.
2. Remove the front panel (Refer to frame 55)
3. Remove the fan and gas valve assembly (Refer to frame 56)
4. Remove the six/eight extended nuts securing the burner to release the burner body.
5. Lift the burner body to remove it from the studs and lift the burner out of its recess.
6. The burner can now be cleaned on the back face only, the metal fibre surface must not be touched. The burner must be replaced if it shows signs of damage.
7. After cleaning the burner replace it in the recess and check the burner body seal for signs of damage. If damage is apparent it must be replaced.
8. Reassemble in reverse order. The six (or eight) extended nuts should be fitted following a diagonal tightening sequence twice. The nuts should be secured firmly.
9. Check the operation of the boiler (Refer to Frame 53).

58 HEAT EXCHANGER INSPECTION / CLEANING

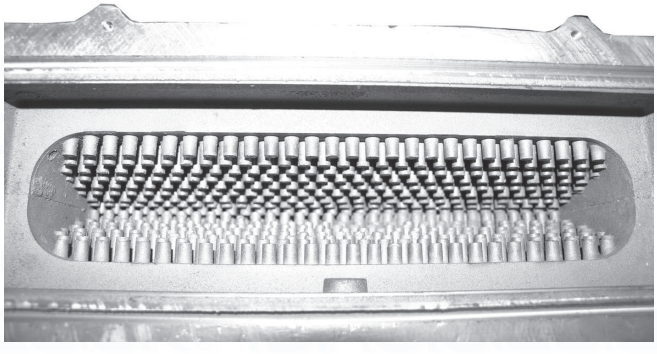

1. Refer to Frame 53.
2. Remove the front panel (Refer to frame 55)
3. Remove the fan and gas assembly (Refer to frame 56)
4. Remove the burner (Refer to frame 57)
5. Remove the ignition and detection electrodes (Refer to frame 64 and 65)
6. Inspect the heat exchanger for signs of aluminium oxide deposits. If necessary clean the heat exchanger by spraying water down the flue ways.
7. Reassemble in reverse order replacing all gaskets.
8. Check the operation of the boiler (Refer to frame 53)

59 REMOVAL OF SUMP COVER

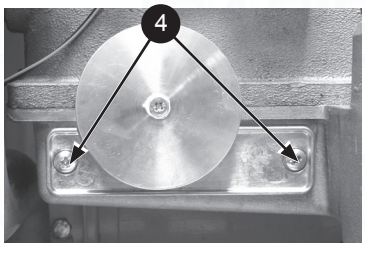

1. Refer to Frame 53.
2. Remove the front panel (Refer to frame 55)
3. Prepare boiler for possible water spillage during the process.
4. Remove the two screws from the helmholtz/clean-out cover and pull away from the boiler.
5. Scrape out any deposits.
6. Reassemble in reverse order replacing all gaskets.

60 CONDENSATE TRAP

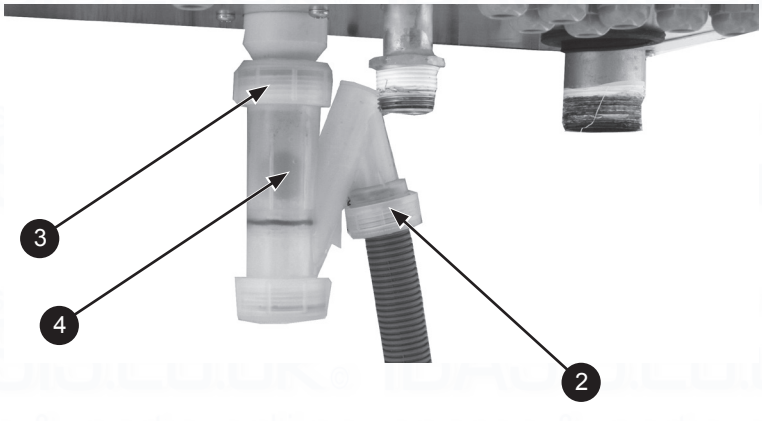

1. Refer to Frame 53.
2. Unscrew the nut and disconnect the flexible pipe.
3. Unscrew the top nut and remove the condensate trap.
4. Remove the ball from the condensate trap and flush out with water to remove any debris.
5. Reassemble in reverse order.
6. Check the operation of the boiler (Refer to frame 53)

61 FAN REPLACEMENT

1. Refer to Frame 53.
2. Remove the upper front panel (Refer to frame 55).
3. Remove the fan and gas assembly (Refer to frame 56).
4. Remove the screws retaining the venturi to the fan.
5. Remove the extended nuts holding the venturi to the fan.
6. Remove the screws retaining the fan plate.
7. Transfer venturi and gas valve assembly to the new fan.
8. Reassemble in reverse order replacing all gaskets.
9. Check the operation of the boiler (Refer to frame 53).

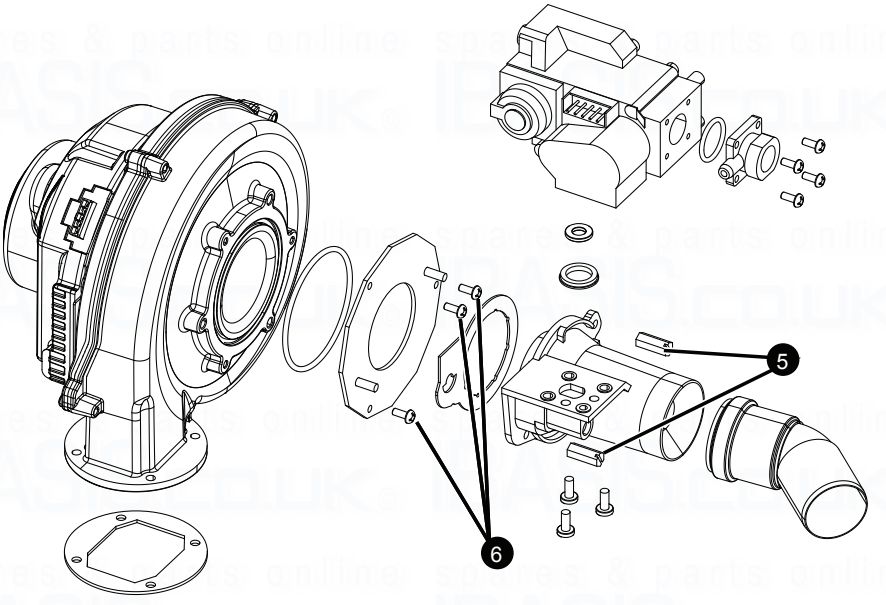

Gas Management Assembly Part No's				
Model	Fan	Venturi	Valve	Injector
45/55	176273	176360	176313	177038

62 GAS VALVE REPLACEMENT

1. Refer to Frame 53.
2. Remove the upper front panel (Refer to frame 55).
3. Remove the fan and gas assembly (Refer to frame 56).
4. Remove the 3 screws holding the gas valve to the venturi.
5. Remvove the four screws retaining the gas valve.
6. Remove the venturi from the mixture chamber before removing the gas valve.
7. Fit new gas valve to venturi using the new seal provided, ensure gas injector is fitted correctly.
8. Reassemble in reverse order replacing all gaskets.
9. Check the operation of the boiler (Refer to frame 53).

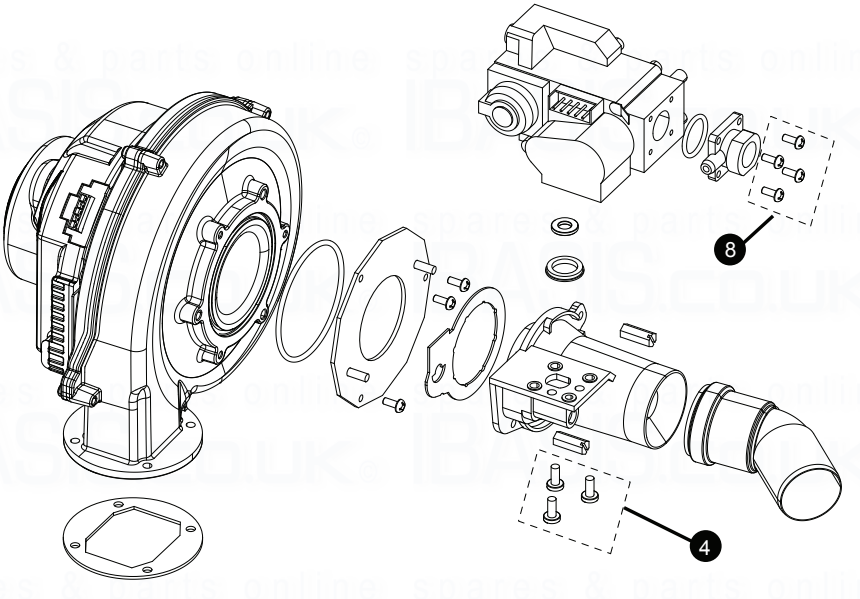

Gas Management Assembly Part No's				
Model	Fan	Venturi	Valve	Injector
45/55	176273	176360	176313	177038

63 VENTURI REPLACEMENT

1. Refer to Frame 53.
2. Remove the front panel (Refer to frame 55)
3. Remove the fan and gas assembly (Refer to frame 56)
4. Remove venturi from fan / mixture chamber and gas valve (Refer to frame 61 & 62)
5. Replace with new venturi ensuring the gas orifice is fitted and seal is replaced.
6. Reassemble in reverse order replacing all gaskets.
7. Check the operation of the boiler (Refer to frame 53)

64 IGNITION ELECTRODE REPLACEMENT

1. Refer to Frame 53.
2. Remove the front panel (Refer to frame 55)
3. Pull off the spark lead and earth connection.
4. Remove the two retaining cap head screws.
5. Pull out the electrode and pull off the old gasket.
6. Replace with new electrode and gasket supplied checking the spark gap is 4mm.
7. Reassemble in reverse order.
8. Check the operation of the boiler (Refer to frame 53)

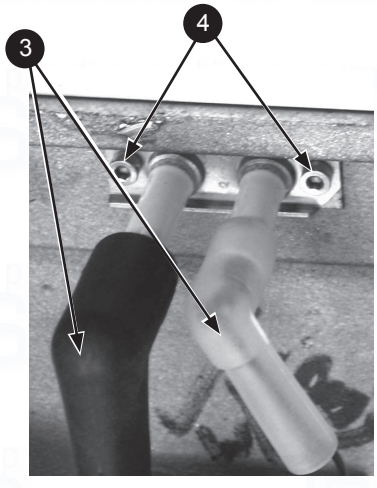

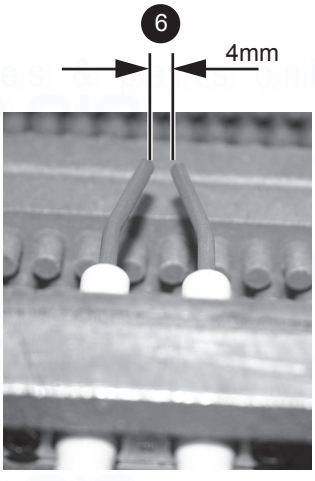

65 DETECTION ELECTRODE REPLACEMENT

1. Refer to Frame 53.
2. Remove the front panel (Refer to frame 55)
3. Pull off the HT lead and earth connection.
4. Remove the two retaining cap head screws.
5. Pull out the electrode and pull off the old gasket.
6. Replace with new electrode and gasket.
7. Reassemble in reverse order.
7. Check the operation of the boiler (Refer to frame 53)

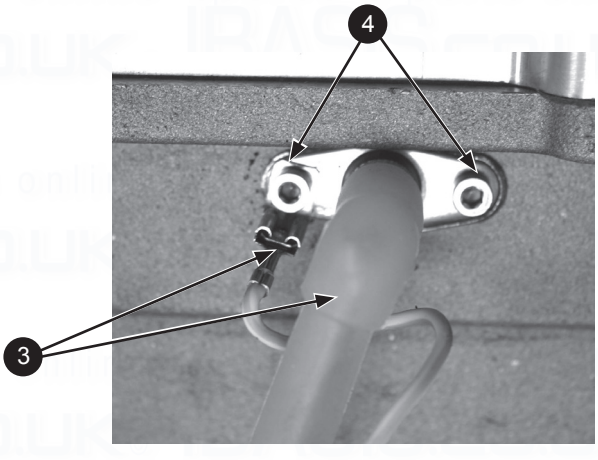

66 AUTOMATIC AIR VENT REMOVAL

1. Refer to Frame 53.
2. Remove the front panel. Refer to Frame 55.
3. Unscrew the air vent (A) from the self sealing fitting (B) on the top left of the flow pipe.
4. Fit the new air vent.
5. Ensure the black plastic vent cap is loose to allow air to escape. Air in the boiler could cause damage to the heat exchanger.
6. Re-assemble in reverse order.
7. Check the operation of the boiler. Refer to Frame 53.

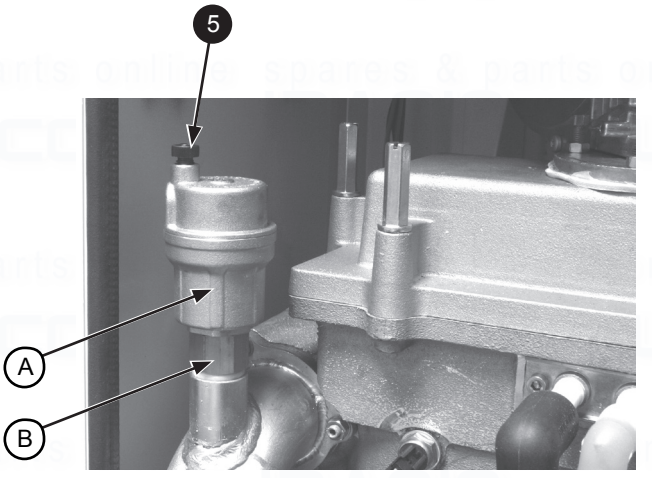

67 WATER PRESSURE SWITCH REPLACEMENT

1. Refer to Frame 53.
2. Remove the front panel (Refer to frame 55).
3. Isolate the water circuit and drain the boiler.
4. Disconnect the electrical connections from the switch.
5. Unscrew the water pressure switch.
6. Refit new switch.
7. Connect electrical connections.
8. Refill the system ensuring all the air escapes via the air vent.
9. Reassemble in reverse order.
10. Check the operation of the boiler (Refer to frame 53).

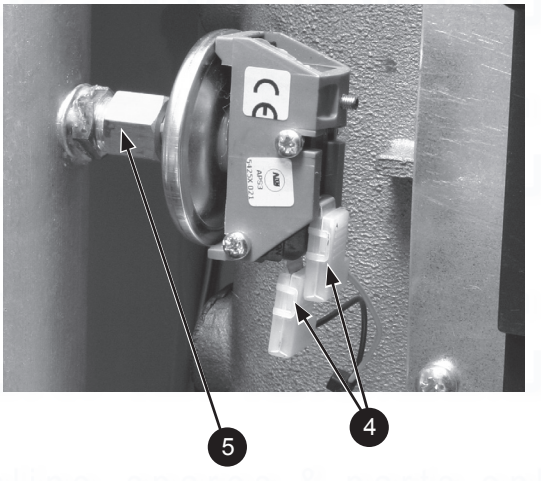

68 FLOW/RETURN THERMISTOR REPLACEMENT

1. Refer to Frame 53.
2. Remove the front panel. Refer to Frame 55.
3. Isolate the water circuit and drain the system.
4. Disconnect the electrical connections from the thermistor.
5. Unscrew the thermistor.
6. Fit the new thermistor with built in ‘O’ ring seal. Do not overtighten.
7. Refill the system ensuring all the air in the heat exchanger is vented through the air vent.
8. Re-assemble in reverse order.
9. Check the operation of the boiler. Refer to Frame 53.

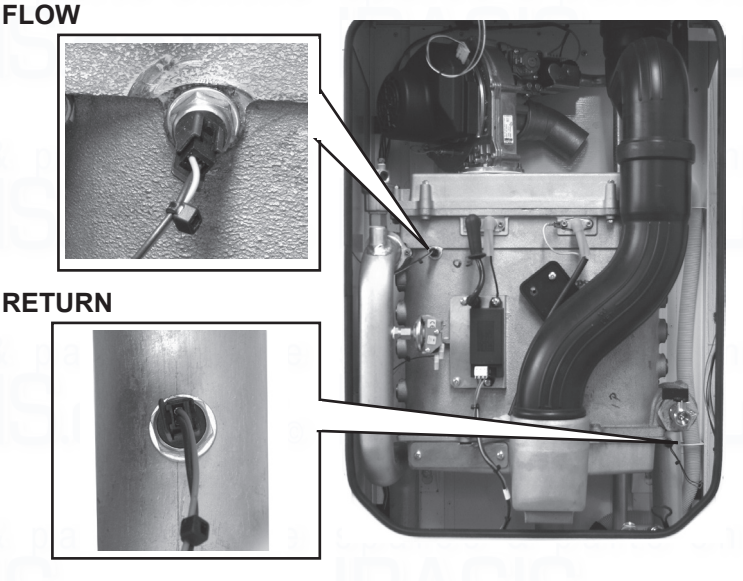

69 FLUE THERMISTOR REPLACEMENT

1. Refer to Frame 53.
2. Remove the front panel. Refer to Frame 55.
3. Disconnect the electrical connections from the thermistor.
4. Unscrew the thermistor.
5. Fit the new thermistor with gasket seal - DO NOT overtighten.
6. Re-assemble in reverse order.
7. Check the operation of the boiler. Refer to Frame 53.

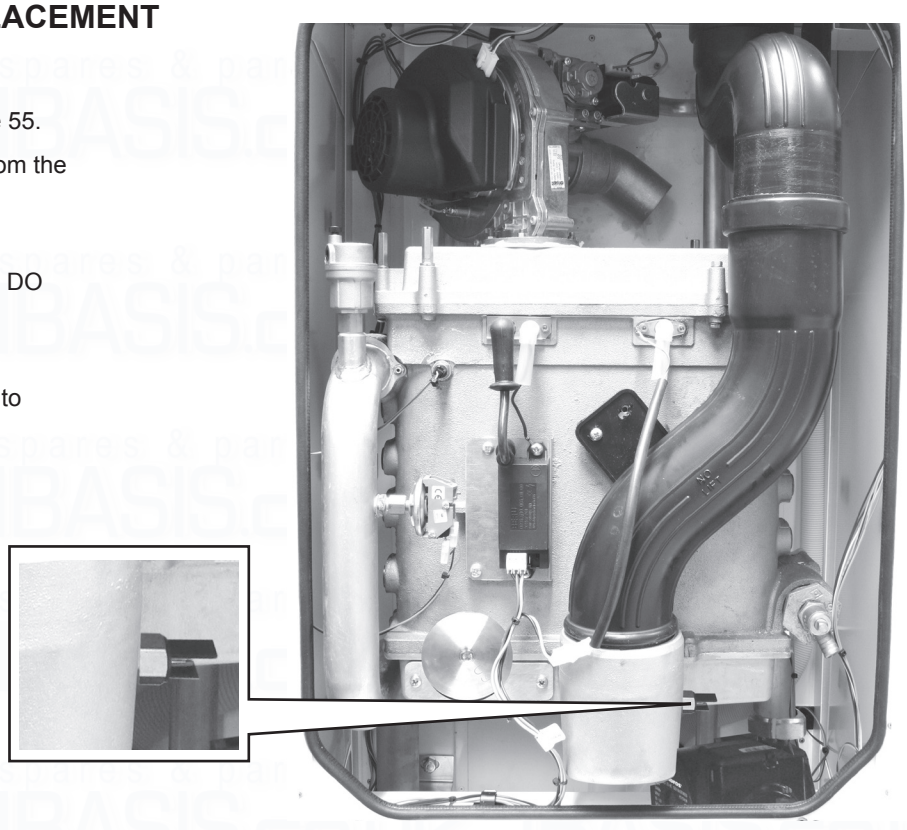

70 PUMP HEAD REPLACEMENT

1. Refer to Frame 53.
2. Remove the front panel. Refer to Frame 55.
3. Isolate water at the flow & return shut-off valves beneath boiler.
4. Drain the water from the boiler via the drain cock adjacent to the shut-off valve.
5. Drop down the control panel door
6. Remove the four M4 screws securing the access aperture cover plate.
7. Remove the cover plate by pulling forward the flange at the top.
8. Disconnect the pump power supply at the left hand terminal strip.
9. Withdraw the power supply cable through the grommet.
10. Remove the four M5 allen bolts securing the pump head to body. *(A high torque is required to release these bolts, a long 4mm 'T bar' allen key is required)*
11. Withdraw the pump head from the body.
12. Remove the PWM cable plug from the pump head.
13. Remove the pump head through the bulkhead aperture.

Care should be taken to avoid water spillage onto the PCB connections when withdrawing the pump head through the aperture. There is a plug situated in the boiler casing floor directly beneath the pump to allow drainage of any spillage within the casing.

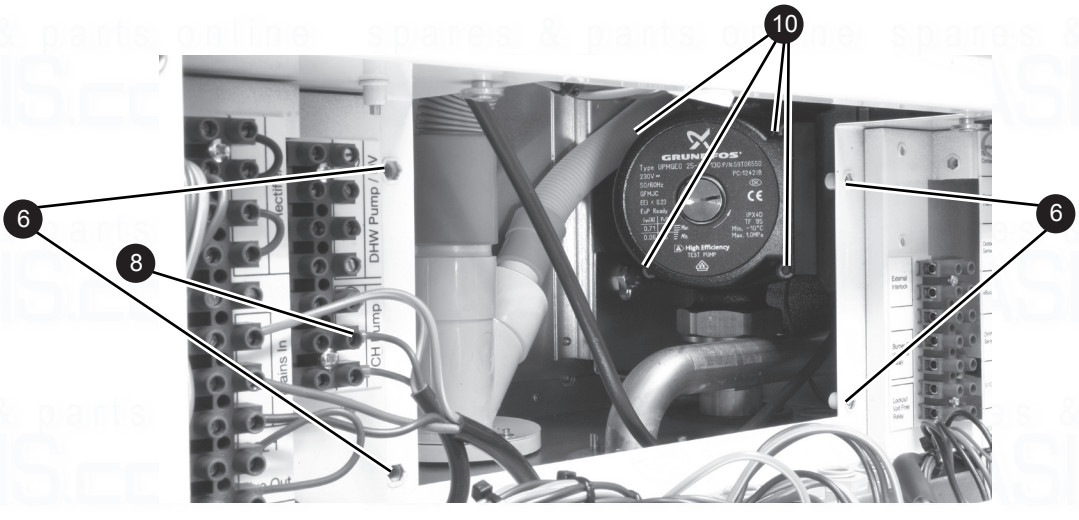

71 MAIN PCB REPLACEMENT

1. Refer to Frame 53.
2. Remove the upper front panel & put the control panel into the service position. Refer to Frame 55.
3. Fit the earth strap provided with the spare PCB to your wrist and to a suitable earthed metal.
4. Pull off all of the main PCB connectors.
5. Remove the four plastic nuts retaining the main PCB.
6. Fit new PCB and BCC (BCC must be fitted or boiler will not work) and re-assemble in reverse order.
7. Check the operation of the boiler. Refer to Frame 53.

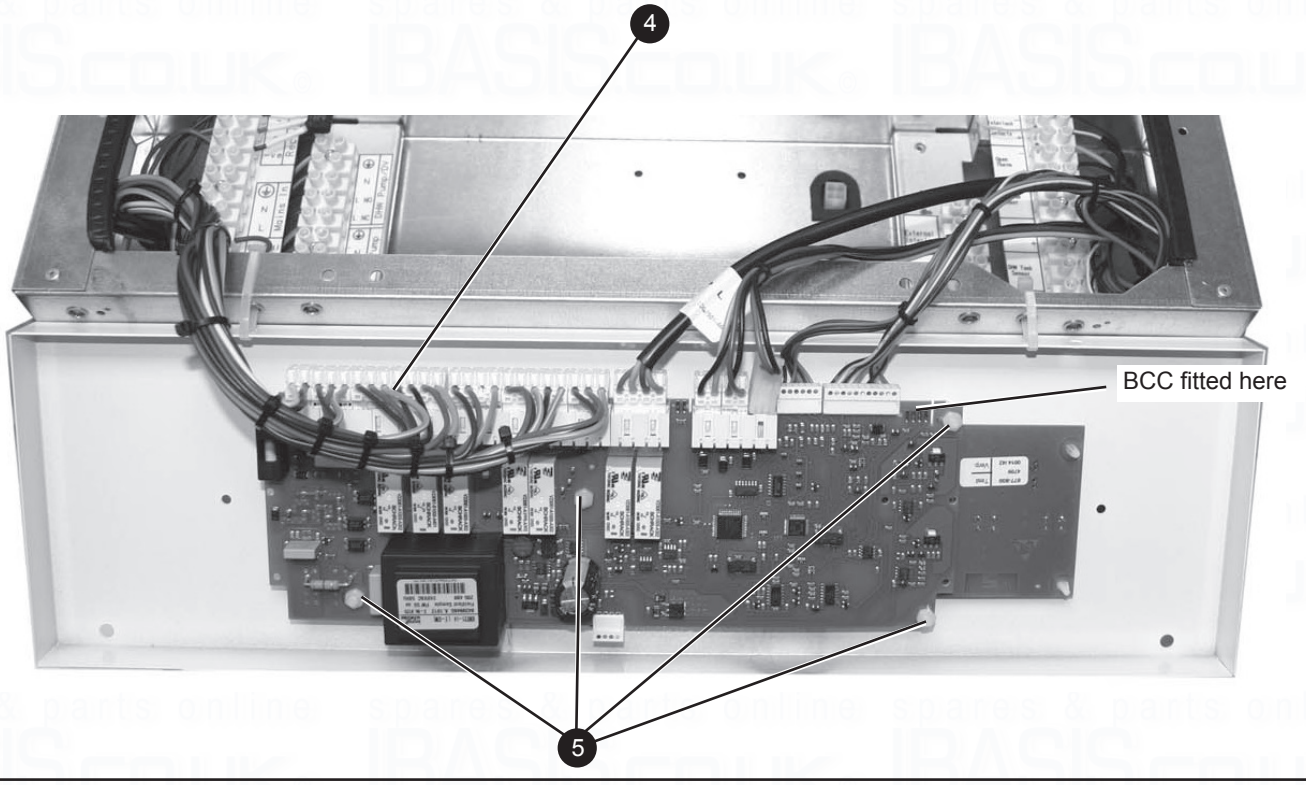

72 USER INTERFACE BOARD

1. Refer to Frame 53.
2. Remove the upper front panel & put the control panel into the service position. Refer to Frame 57.
3. Fit the earth strap provided with the spare PCB to your wrist and to a suitable earthed metal.
4. Pull off all of the main PCB edge connectors (refer to Frame 71).
5. Remove the four plastic nuts retaining the main PCB - see item 5 in Frame 71.
6. Remove the main PCB.
7. Pull off the user interface edge connector.
8. Unclip the board and lift to clear the six mounting posts.
9. Fit the new user interface.
10. Reassemble in reverse order.
10. Check the operation of the boiler. Refer to Frame 53.

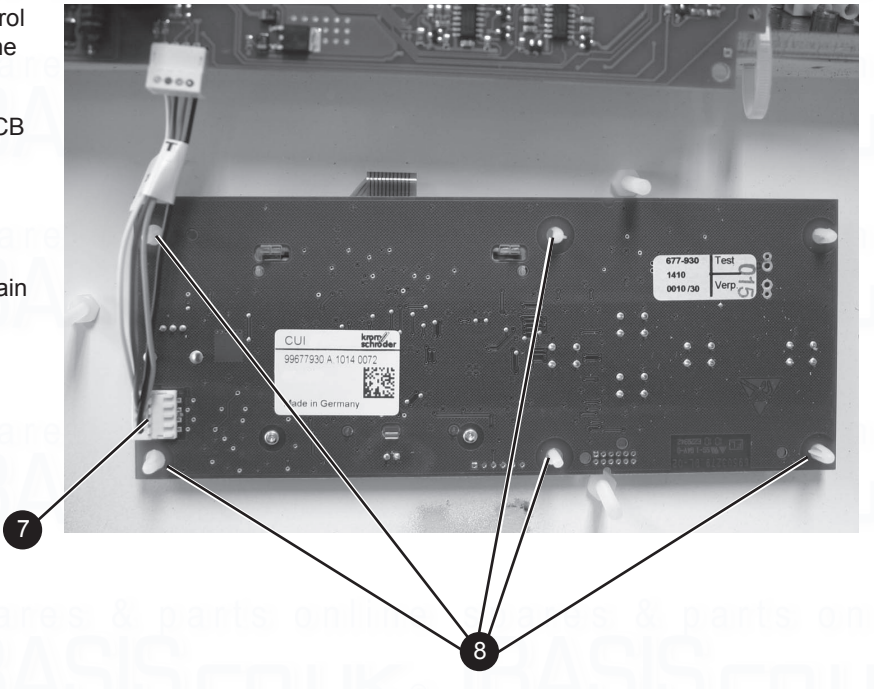

73 FAULT FINDING CHART - MAIN MENU

Overheat Lockout Fill System to 1 Bar Vent System Check Pump Spins Free Reset Boiler	Go to Frame 74 Overheat Lockout
Ignition Lockout Check Gas to Boiler Check Condensate Pipe Refer to Instructions Reset Boiler	Go to Frame 75 Ignition Lockout
Too Many Resets Turn Boiler Power Off Turn Boiler Power On	5 resets within 15 mins Turn power off and on
False Flame Lockout Check Flame Sense Electrode Check Flame Sense Electrode Wiring	Go to Frame 76 False Flame Lockout
Low Water Pressure Fill System to 1 Bar Vent System	Go to Frame 77 Low Water Pressure
Flame Loss Check Gas to Boiler Check Condensate Pipe Check Flue System Check Flame Sensor / Lead	Go to Frame 78 Flame Loss
Fan Fault Check Fan Wiring Check Fan	Go to Frame 79 Fan Fault
Flow/Flue Thermistor Fault Check Flow Thermistor Wiring Check Flow Thermistor (10K @ 25°C,2K at 66°C)	Go to Frame 80 Flow/Flue Thermistor Fault
No CH but DHW OK	Go to Frame 87 No CH but DHW OK
No DHW but CH OK	Go to Frame 88 No DHW but CH OK
Blank Display	Go to Frame 89 Blank Display
CH Continues to run when Timer is off	Ensure Night Setback not enabled. See Frame 39
Flow Temperature Setpoint cannot be increased to 82°C	Ensure Flow Temp is not limited within Installer Mode. See Frame 40

Return Thmr Fault Check Return Thermistor Wiring Check Return Thmr (10K @ 25°C,2K at 66°C)	Go to Frame 81 Return Thermistor Fault
Outside Sensor Fault Check Outside Sensor Wiring Check Outside Sensor (10K @ 25°C,2K at 66°C)	Go to Frame 82 Outside Sensor Fault
Flue Thermistor Fault Check Flue Thermistor Wiring Check Flue Thermistor (10k @ 25ºC, 2k @ 66ºC)	Go to Frame 80 Flow Thermistor Fault
Low Mains Voltage Less than 160V Check Local Generator Contact Electricity Provider	Contact Electricity Provider
PCB Fault Ensure BCC fitted Replace PCB	Replace Main PCB
Flow/Return Reversed Check Pump Check System Pipework	Go to Frame 83 Flow/Return Reversed
Cylinder Thermistor Fault Check Cylinder Thermistor Wiring Check Cylinder Thmr (10K @ 25°C,2K at 66°C)	Go to Frame 84 CylinderThermistor Fault
Ext' Interlock Off External Interlock Operated Reset Interlock	Go to Frame 85 Ext' Interlock Off
BCC Fault Ensure BCC fitted correctly Replace BCC	Go to Frame 86 BCC Fault
Pump runs during the night	Ensure system Frost Protection Temp Setpoint is not set too high. Go to Frame 40
Boiler does not respond to 0-10V Input	Go to Frame 38 0-10V Interface
DHW Thermistor used and DHW does not end	Ensure boiler set for DHW Thermistor See Frame 41
Error 20	Go to Frame 76 False Flame Lockout
Pump only runs at maximum speed	Check LV wiring from PCB to pump

74 OVERHEAT LOCKOUT

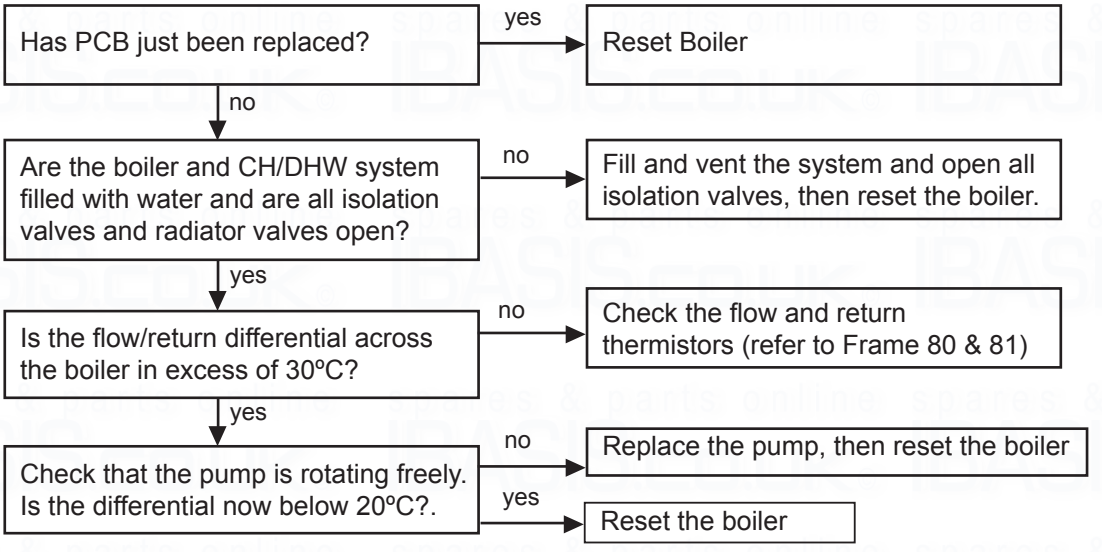

75 IGNITION LOCKOUT

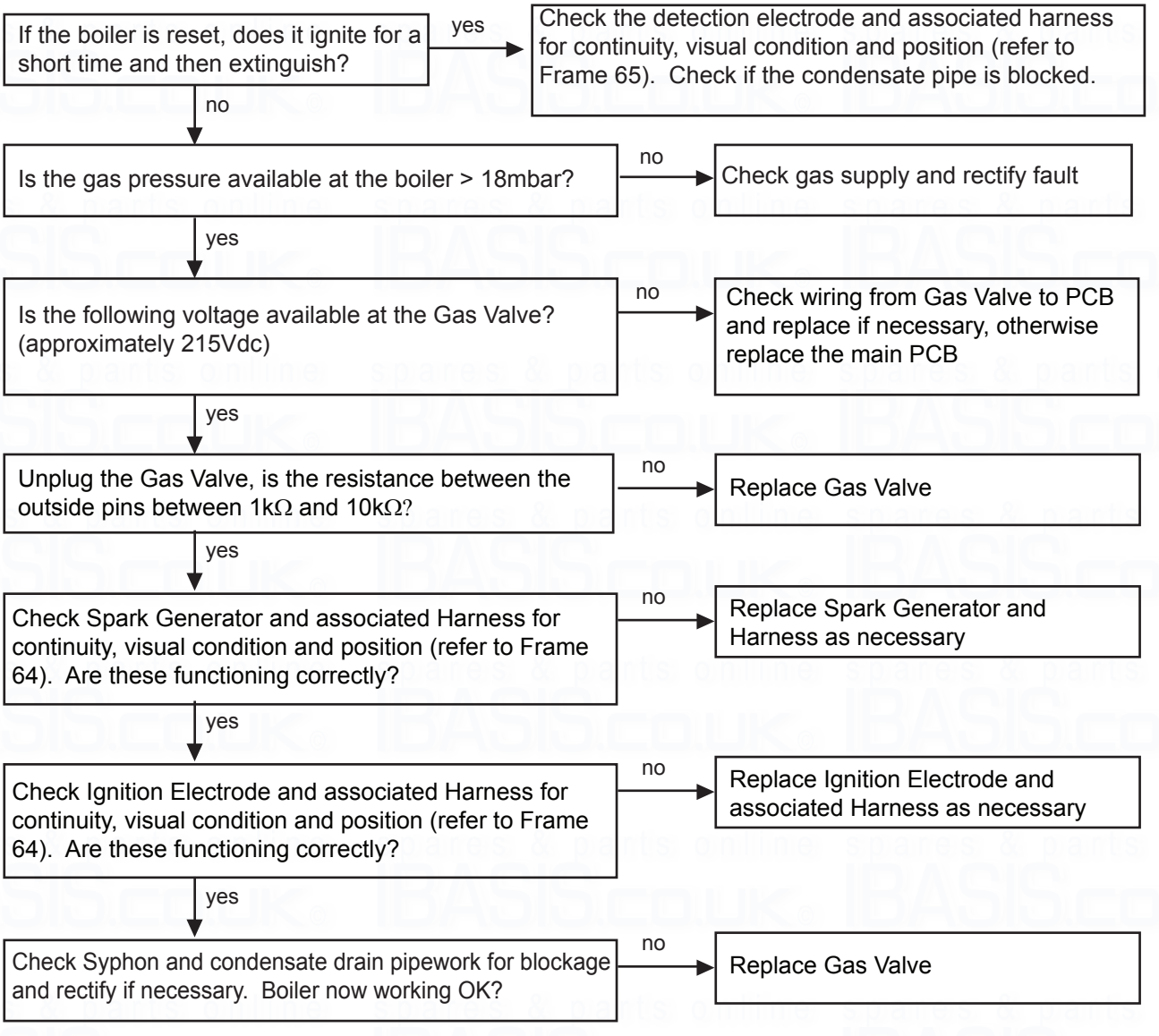

76 FALSE FLAME LOCKOUT / ERROR 20

- Reset the boiler, does boiler work OK?
  - yes → Check routing and integrity of internal boiler wiring is OK. Check condition of Flame Sense Electrode and replace if deteriorated.
  - no ↓
- Disconnect the electrical connection to the Flame Sense Electrode. Is there continuity between the Electrode and earth?
  - yes → Replace Flame Detection Electrode
  - no → Check routing and integrity of internal boiler wiring

77 LOW WATER PRESSURE

- Are the boiler and CH system filled with water and all Isolation and Radiator Valves open?
  - no → Fill and vent the system and open all Isolation Valves
  - yes ↓
- Does the wiring from the Water Pressure Switch to the PCB have continuity and is it securely connected?
  - no → Ensure wiring has continuity and is securely connected
  - yes → Check Safety Interlock Operation (if fitted)
    - OK ↓ Replace Water Pressure Switch

78 FLAME LOSS

- If the boiler is Reset, does the boiler Ignite for a short time and then Extinguish
  - yes → Check the Detection Electrode and associated Harness for continuity, visual condition and position (refer to Frame 65). Check if the Condensate Pipe is blocked. Check if the Flue is blocked. Replace as necessary
  - no ↓
- Is the Gas Pressure available at the boiler > 18mBar?
  - no → Check Gas Supply and rectify fault
  - yes ↓
- Is the following voltage available at the Gas Valve? (approximately 215Vdc) (*See note)
  - no → Check wiring from Gas Valve to PCB and replace if necessary, otherwise replace the main PCB
  - yes ↓
- Check Spark Generator and associated Harness for continuity, visual condition and position (refer to Frame 64). Are these functioning correctly?
  - no → Replace Spark Generator and Harness as necessary
  - yes ↓
- Check Ignition Electrode and associated Harness for continuity, visual condition and position (refer to Frame 64). Are these functioning correctly?
  - no → Replace Ignition Electrode and associated Harness as necessary
  - yes ↓
- Check Syphon and condensate drain pipework for blockage and rectify if necessary. Boiler now working OK?
  - no → Replace Gas Valve

* Note: due to the wave form of the rectified voltage, the reading will vary depending on the type of meter used to measure the value. In general terms a reading of greater than 150V indicates that the correct voltage is supplied to the gas valve

79 FAN FAULT

Does the wiring from the Fan to the PCB have secure connections at both ends and has not deteriorated? Does the wiring have continuity?

- no → Rectify wiring & connections
- yes ↓

Is there 230Vac at the blue and brown connections to the 3 way connection on the Fan?

- no → Replace main PCB
- yes → Replace Fan

80 FLOW & FLUE THERMISTOR FAULT

Disconnect the electrical connection to the Flow/Flue Thermistor and check the resistance using a suitable multimeter connected across the thermistor's terminal pins.
At 25°C expect 9,700 - 10,300 KΩ
At 60°C expect 2,400 - 2,600 KΩ
At 85°C expect 1,000 - 1,100 KΩ
Is the thermistor value correct?

- no → Fit a new thermistor
- yes ↓

Is there continuity between the PCB and the Thermistor?

- no → Check and replace wiring as necessary
- yes → Replace main PCB

81 RETURN THERMISTOR FAULT

Remove the Return Thermistor from the CH return pipe and disconnect the wires. Check the resistance using a suitable multimeter connected across the thermistor's terminal pins.
At 25°C expect 9,700 - 10,300 Ω
At 60°C expect 2,400 - 2,600 Ω
At 85°C expect 1,000 - 1,100 Ω
Is the thermistor value correct?

- no → Fit a new thermistor
- yes ↓

Is there continuity between the PCB and the Thermistor?

- no → Check and replace wiring as necessary
- yes ↓

Replace main PCB

82 OUTSIDE SENSOR FAULT

Is the wiring securely connected at both the boiler and Outside Sensor?

- no → Securely connect the wiring at both the boiler and Outside sensor
- yes ↓

Disconnect the wires to the Outside Sensor. Check the resistance using a suitable multimeter connected across the thermistor's terminal pins.
At 0°C expect 32,000 - 33,000 KΩ
At 10°C expect 19,000 - 21,000 KΩ
At 20°C expect 12,000 - 13,000 KΩ
Is the thermistor value correct?

- no → Fit a new outside sensor
- yes ↓

Does the Outside Sensor wiring between the boiler terminal strip and the PCB have continuity and is securely connected?

- no → Ensure the wiring has continuity and is securely connected
- yes ↓

Replace main PCB

83 FLOW/RETURN REVERSED

Is the System Pump connected the correct way?

- no → Reverse Pump
- yes ↓

Check that the system pipework is correct

84 CYLINDER THERMISTOR FAULT

Is a DHW Thermistor connected to the boiler?
- no → Change menu setting for DHW Sensor to “Switched Live” (See Frame 41)
- yes ↓

Is the wiring securely connected at both the boiler and cylinder thermistor?
- no → Securely connect the wiring at both the boiler and cylinder thermistor
- yes ↓

Disconnect the wires to the cylinder thermistor. Check the resistance using a suitable multimeter connected across the thermistor’s terminal pins.
At 25°C expect 9,700 - 10,300 Ω
At 60°C expect 2,400 - 2,600 Ω
At 85°C expect 1,000 - 1,100 Ω
Is the thermistor value correct?
- no → Fit a new cylinder thermistor
- yes ↓

Does the cylinder thermistor wiring between the boiler terminal strip and the PCB have continuity and is securely connected?
- no → Ensure the wiring has continuity and is securely connected
- yes → Replace main PCB

85 EXTERNAL INTERLOCK OFF

Is an External Interlock connected to the boiler?
- no → Ensure that a link wire is securely connected across the terminals marked “External Interlock” in the boiler terminal strip
- yes ↓

Has the External Interlock operated?
- yes → Reset the External Interlock
- no ↓

Does the wiring from the Interlock Relay (mounted within the boiler) to the terminal strip have continuity and is securely connected?
- no → Ensure the wiring has continuity and is securely connected
- yes → Replace the Interlock Relay Kit

86 BCC FAULT

Is the correct BCC for the boiler securely inserted into the slot at the front left of the PCB? (identified by the label on the BCC)
- no → Securely attach the correct BCC for the boiler onto the PCB.Note: ensure the correct orientation of the BCC by placing the side marked “TOP” upwards.
- yes ↓

Replace the BCC with a new BCC (that is correct for the boiler). After switching power on and resetting the boiler does the fault disappear
- yes → Replace main PCB

87 NO CH BUT DHW OK

- Is the boiler set for Winter operation?
  - no → Set for Winter operation (see Frame 36)
  - yes ↓
- Are the Timer and Room Thermostat calling for Heat?
  - no → Ensure that the Timer and Room Thermostat are calling for heat
  - yes ↓
- Are the Radiator Valves open?
  - no → Open the Radiator Valves
  - yes ↓
- Is an OpenTherm device connected to the boiler (note that the Keston Prog Room Stat is an OpenTherm device)?
  - yes → Does the wiring from the boiler to the OpenTherm device have continuity?
    - no → Rectify wiring from boiler to OpenTherm device
    - yes ↓
  - no ↓
- Is there 230Vac at (A)?
  - no → There is no voltage from the Timer/ Room Stat. This is not a boiler fault. Ensure voltage is supplied to the boiler by correcting external wiring
  - yes ↓
- Is there 230Vac at (B)?
  - no → Check wiring from PCB to (B)
  - yes ↓
- Does wiring to Pump have continuity and is to the correct connections?
  - no → Rectify wiring to pump
  - yes ↓
- Is the pump stuck
  - no → Replace the pump
  - yes ↓
- Free the pump

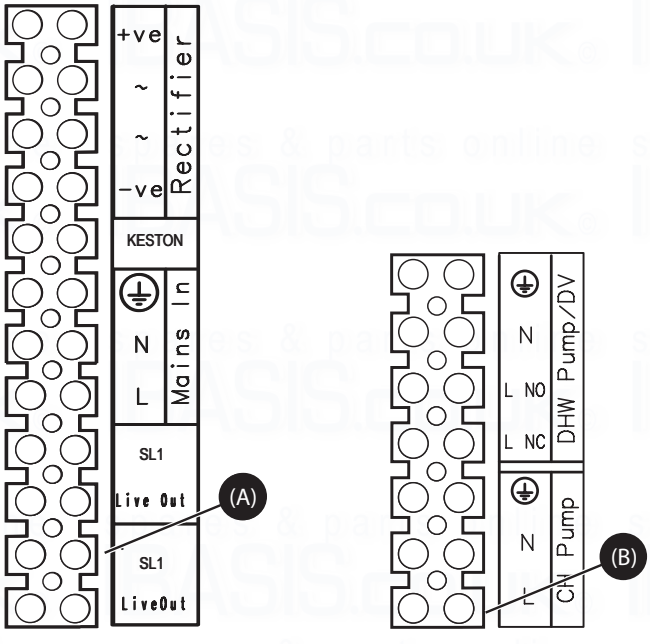

88 NO DHW BUT CH OK

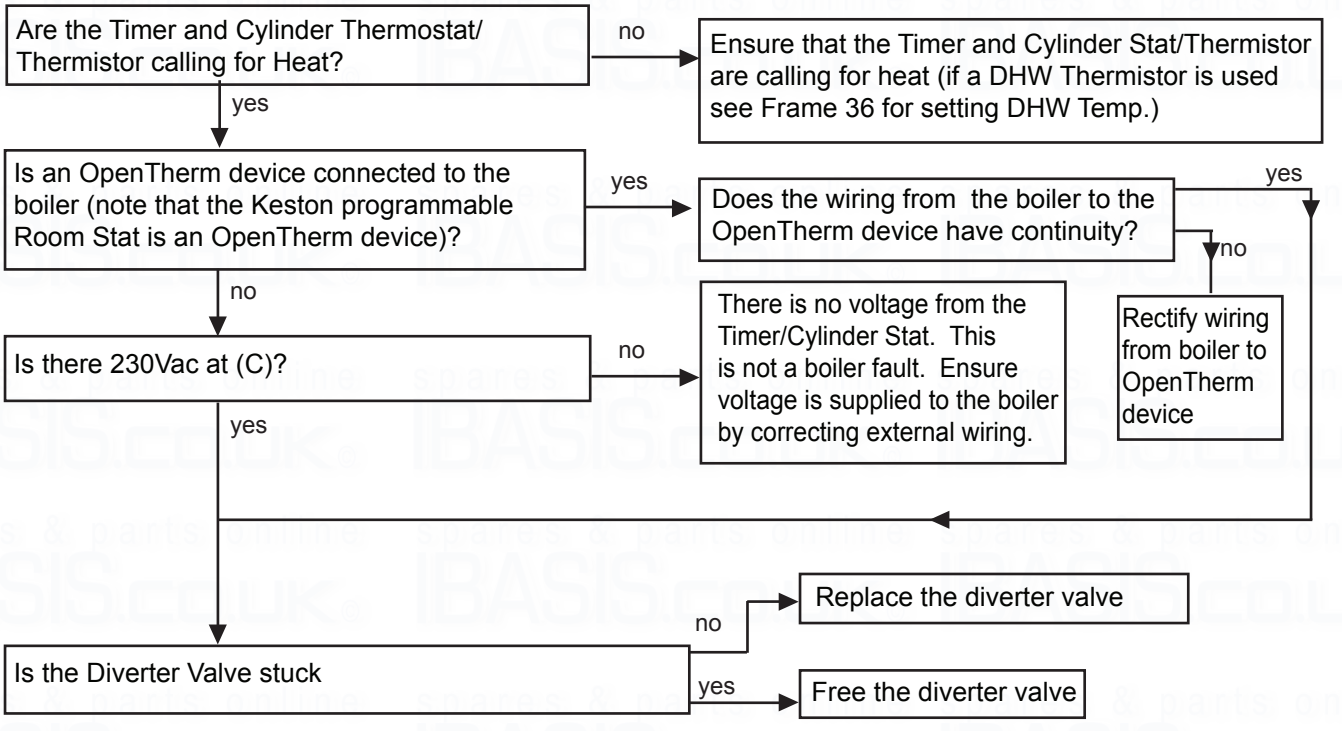

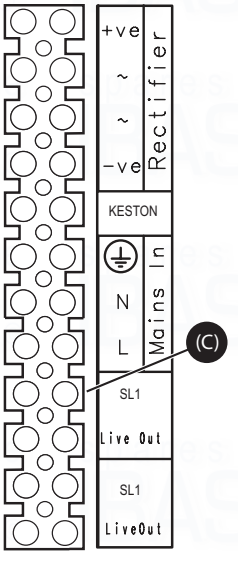

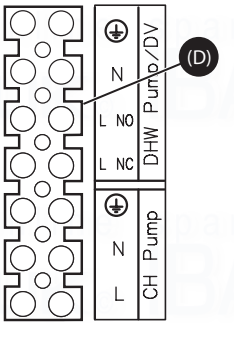

89 NO DISPLAY

Is there 230Vac to the boiler at (E)?
- no → Supply power to the boiler
- yes ↓

Is the wiring from the boiler terminal block to the main PCB connected securely?
- no → Connect the wiring from the terminal block to the main PCB securely
- yes ↓

Is the cable from the main PCB to the user interface PCB connected securely?
- no → Connect the cable from the main PCB to the user interface PCB securely
- yes ↓

Does the cable from the main PCB to the user interface PCB have continuity and is un-damaged?
- no → Replace cable from main PCB to user interface PCB
- yes ↓

Is the Fuse on the main PCB OK?
- no → Check for shorts on Pumps/Diverter Valve/ Fan/Spark Generator/Gas Valve and replace Fuse
- yes ↓

Replace the user interface PCB, still no display?
- no → Replace main PCB

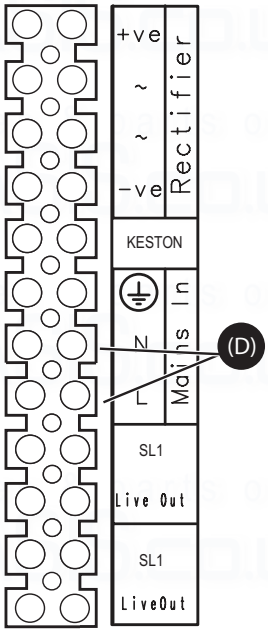

90 0-10V INTERFACE

Is the boiler set to accept a 0-10V Input?
- no → Set the boiler to accept a 0-10V input (see Frame 38)
- yes ↓

Is the boiler set to Winter Mode?
- no → Set the boiler to Winter Mode (see Frame 38)
- yes ↓

Is a voltage of between 2V and 10V being supplied to (F), with positive and negative connected correctly?
- no → Ensure between 2V and 10V is correctly connected to these terminals from the external device
- yes ↓

Is the wiring from the boiler terminal strip to the main PCB securely connected and has continuity?
- no → Ensure that the wiring is securely connected and has continuity
- yes ↓

Replace main PCB

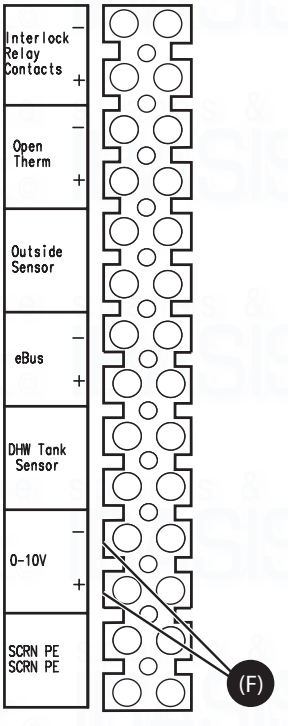

SPARE PARTS

When replacing any part on this appliance use only spare parts that you can be assured conform to the safety and performance specification that we require. Do not use reconditioned or copy parts that have not been clearly authorised by Keston. Failure to do so could affect safety or performance of this appliance.

Our Parts team are also available to help with your Keston Spare Parts enquiries on 01482 498665.

When calling, and to ensure we can provide you with the most accurate parts information, please ensure you have the following to hand;

- Boiler Model
- Appliance GC Number
- Boiler Serial Number

spares & parts online IBASIS.CO.UK

Keston Heating, PO Box 103, National Avenue, Kingston Upon Hull, HU5 4JN
Tel. +44 (0) 1482 443005 Fax. +44 (0) 1482 467133. www.keston.co.uk

October 2012 UIN 208964 A01

Keston

Keston pursues a policy of continuing improvement in the design and performance of its products. The right is therefore reserved to vary specification without notice.

Keston

Heat 45 & 55

User Instructions

FAN POWERED HIGH EFFICIENCY
MODULATING DOMESTIC CONDENSING
GAS COMBINATION BOILER

CE/PI No. 86-CN-69
Heat 45 - GC No. 41-930-40
Heat 55 - GC No. 41-930-41

CE

These instructions must be left either with the user or next to the site gas meter.

Keston Heating
PO Box 103, National Avenue, Kingston Upon Hull, HU5 4JN
Tel. +44 (0) 1482 443005 Fax. +44 (0) 1482 467133
email : info@keston.co.uk web : www.keston.co.uk

COMPLIANT WITH BUILDING REGULATION PART L1 & L2

SEDBUK A RATED

benchmark

Keston Heat

45 & 55

Natural Gas
PI No. 86 CN 69
Destination Countries: GB, IE, RO

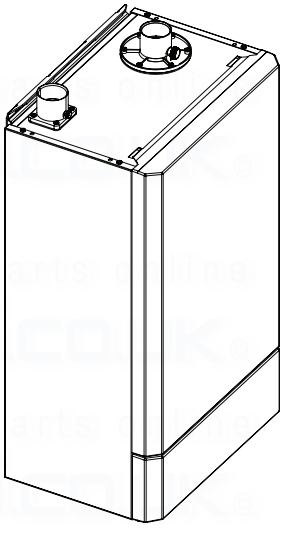

Introduction

The **Keston Heat** is a wall mounted, room sealed, super efficient condensing boiler featuring full sequence automatic spark ignition and fan assisted combustion.

Due to the very high efficiency, condensate is produced from the flue gases and this is drained to a suitable disposal point through the plastic waste pipe at the bottom of the boiler. A condensate 'plume' will also often be visible at the flue terminal.

Safety

Current Gas Safety (Installation & Use) Regulations or rules in force.

In your own interest, and that of safety, it is the law that this boiler must be installed and maintained by a Gas Safe Registered Engineer or in IE a competent person, in accordance with the above regulations.

The appliance should be serviced at least once a year by a Gas Safe Registered Engineer or in IE a competent person.

It is essential that the instructions in this booklet are strictly followed, for safe and economical operation of the boiler.

Electricity Supply

The appliance must be earthed.

Supply 230 V - 50 Hz. The fusing should be 3A.

This appliance is intended to be connected to the supply via a double-pole switch, having a 3mm contact separation in both poles, serving only the boiler and system controls. Alternatively, a 3-pin UNSWITCHED socket may be used.

Important Notes

- This appliance must not be operated without the casing correctly fitted and forming an adequate seal.
- If the boiler is installed in a compartment then the compartment MUST NOT be used for storage purposes.
- Do not store objects around or on the boiler, and keep access clear at all times.
- Do not obstruct ventilation ducts, grilles or openings in the boiler room, room space or compartment that the appliance is installed in, or the passage of combustion and ventilation to the boiler.
- Do not turn off the boiler if it is to be left unattended in frosty weather.
- If it is known or suspected that a fault exists on the boiler then it MUST NOT BE USED until the fault has been corrected by a Gas Safe Registered Engineer or in IE a competent person.
- Flammable materials must not be placed in close proximity to the appliance. Materials giving off flammable vapours must not be stored in the same room as the appliance.
- This appliance can be used by children aged from 8 years and above and persons with reduced physical, sensory or mental capabilities or lack of experience and knowledge if they have been given supervision or instruction concerning use of the appliance in a safe way and understand the hazards involved. Children shall not play with the appliance. Cleaning and user maintenance shall not be made by children without supervision

In cases of repeated or continuous shutdown a Gas Safe Registered Engineer or in IE a competent person should be called to investigate and rectify the condition causing this and carry out an operational test after each intervention on the device. Only the manufacturers original parts should be used for replacement.

Minimum Clearances

Clearances of **300mm (12")** below, **25mm (1")** at the sides and **450mm (17 3/4**") at the front of the boiler casing must be allowed for servicing.

To light the boiler **(Refer to Frame 1)**

1. CHECK THAT THE ELECTRICITY SUPPLY TO THE BOILER IS OFF.
2. Set the boiler to standby.
3. Switch on the electricity supply to the boiler and check that all external controls, e.g. programmer, room thermostat, etc are on. Allow the boiler to carry out a self check.
4. Set the boiler to winter.

The boiler will commence the ignition sequence, supplying heat to the system when required.

All **Gas Safe Registered Engineers** carry a Gas Safe Register ID card, and have a registration number.
Both should be recorded in your Log Book. You can check your installer by calling Gas Safe Register direct on 0800 4085500.

CAUTION. To avoid the possibility of injury during the installation, servicing or cleaning of this appliance care should be taken when handling edges of sheet steel components.

1 BOILER CONTROLS / DISPLAY

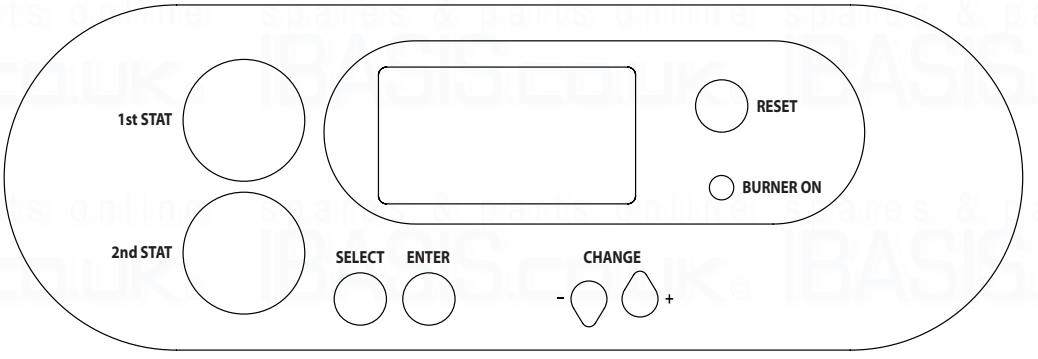

Standby Mode
If the boiler has been switched to Standby Mode the following screen will be displayed
No Boiler operation will take place with this setting. See Frame 36 to change to Summer or Winter setting

Standby Mode	
For Central Heating	
select Winter Mode	
For Hot Water	
select Summer or Winter	

Summer Mode
If the boiler has been switched to Summer Mode a screen similar to the following will be displayed (line 5 may vary depending on setup)
Domestic Hot Water operation will take place with this setting but Central Heating will not.
See Frame 36 to enable Central Heating by changing to Winter setting

Summer Mode	
For Central Heating	
select Winter Mode	
No Hot Water Demand	
Switched Live	Off

Winter Mode
If there is no current Heat Demand a screen similar to the following will be displayed (line 5 may vary depending on setup)
Line 5 indicates “Switched Live” or “OpenTherm” or “0-10V” depending on which controls are connected to the boiler

Winter Mode	
No Central Heating	
Demand	
No Hot Water Demand	
Switched Live	Off

Domestic Hot Water Mode (DHW Thermostat)
If there is an ongoing Domestic Hot Water Demand using a DHW Thermostat screens similar to the following will be displayed
Line 2 indicates whether Switched Live or OpenTherm is controlling the boiler
Line 3 indicates the current operating State (Pre-Purge or Ignition or Burner On or Pump Overrun)
Burner Power and Flow Temperature will vary as the boiler operates

DHW 230V Operation	
Switched Live 2 On	
Burner On	
DHW Thermostat	
Flow Temp	80°C

↔

DHW 230V Operation	
Burner Power	100%
Burner On	
DHW Thermostat	
Flow Temp	80°C

Central Heating Mode
If there is an ongoing Central Heating Demand screens similar to the following will be displayed
Line 2 indicates whether Switched Live or OpenTherm is controlling the boiler
Line 3 indicates the current operating State (Pre-Purge or Ignition or Burner On or Pump Overrun)
Outside temperature will only be shown if an outside sensor is connected to the boiler
Burner Power and Flow Temp will vary as the boiler operates
See Frame 36 for adjusting Flow Setpoint

CH 230V Operation	
CH Switched Live On	
Burner On	
Flow Setpoint	80°C
Flow Temp	80°C

↔

CH 230V Operation	
Burner Power	100%
Outside Temp’	10°C
Flow Setpoint	80°C
Flow Temp	80°C

Boiler Frost Protection Mode
If the boiler flow temperature drops below 5°C screens similar to the following will be displayed
Line 3 indicates the current operating State (Pre-Purge or Ignition or Burner On or Pump Overrun)
Outside temperature will only be shown if an outside sensor is connected to the boiler
Burner Power and Flow Temp will vary as the boiler operates

Boiler Frost Protect	
Burner Power	100%
Burner On	
Frost Setpoint	5°C
Flow Temp	80°C

↔

Boiler Frost Protect	
Burner Power	100%
Outside Temp’	10°C
Frost Setpoint	5°C
Flow Temp	80°C

2 KESTON HEAT USER INTERFACE - BASIC OPERATING INSTRUCTIONS

SETTING STAT 1 TEMPERATURE

Rotate Stat 1 and the following screen will be displayed.

Set Stat 1 Temp'

80°C

Rotate the knob until the desired temperature is shown and then press ENTER to store

SETTING SUMMER, WINTER AND STANDBY OPERATION

Note that Standby Mode will disable Domestic Hot Water and Central Heating, Summer Mode will disable Central Heating

Press SELECT and a screen similar to the following will be displayed The kW output number in the 1st line will vary depending the maximum output of the boiler

Keston 45kW

Normal Operation

Set Stat 1 Temp'

Set Stat 2 Temp'

Rotate 1st stat clockwise until a screen similar to following is displayed

Keston 45kW

Set Stat 2 Temp'

Set Off/Sum/Win

Out' Sensor Slope

Normal Operation

Press SELECT and a screen similar to the following will be displayed

Set Off/Sum/Win

Standby

Summer

Winter

Press - for more

Press + and - to change to required setting, press ENTER to store

Rotate the KNOB anti-clockwise until Normal Operation is highlighted again and press SELECT to return to normal operation

To shut Down the Boiler

1. **For short periods**

   Set the external controls to OFF. Wait 4 minutes and then isolate the mains supply to the boiler.

2. **For longer periods**

   Set the external controls to OFF. Switch the electricity supply to OFF. For longer periods the entire system should be drained, including the domestic hot water supply.

To Relight the Boiler

Refill the system if it has been drained, taking care to ensure no air is in the boiler or system.

Repeat the procedure detailed in 'To light the boiler'.

Frost Protection

The Keston Heat boiler has built into its control system the facility to protect the boiler only against freezing.

Note.

This may not protect remote parts of the system, in which case a separate frost thermostat should be fitted.

Boiler Overheat Thermostat

Boiler overheating is detected by electrical sensors connected to the boiler control module. If the boiler overheats it will shut down and the display will show Overheat Lockout. Press the reset button and the boiler will relight. If the fault recurs turn off the boiler and consult a Gas Safe Registered Engineer or in IE a competent person.

Condensate Drain

This appliance is fitted with a siphonic condensate trap system that reduces the risk of the appliance condensate from freezing. However should the condensate pipe to this appliance freeze, please follow these instructions:

a. If you do not feel competent to carry out the defrosting instructions below please call your local Gas Safe Registered installer for assistance.

b. If you do feel competent to carry out the following instructions please do so with care when handling hot utensils. Do not attempt to thaw pipework above ground level.

If this appliance develops a blockage in its condensate pipe, its condensate will build up to a point where it will make a gurgling noise prior to locking out displaying "Ignition Lockout" on the display. If the appliance is reset it will make a gurgling noise prior to it locking out displaying "Ignition Lockout" on the display.

To unblock a frozen condensate pipe;

1. Follow the routing of the plastic pipe from its exit point on the appliance, through its route to its termination point.

   Locate the frozen blockage. It is likely that the pipe is frozen at the most exposed point external to the building or where there is some obstruction to flow. This could be at the open end of the pipe, at a bend or elbow, or where there is a dip in the pipe in which condensate can collect. The location of the blockage should be identified as closely as possible before taking further action.

2. Apply a hot water bottle, microwaveable heat pack or a warm damp cloth to the frozen blockage area. Several applications may have to be made before it fully defrosts. Warm water can also be poured onto the pipe from a watering can or similar. DO NOT use boiling water.

3. Caution when using warm water as this may freeze and cause other localised hazards.

4. Once the blockage is removed and the condensate can flow freely, reset the appliance. (Refer to "To Light the boiler")

5. If the appliance fails to ignite, call your Gas Safe Registered engineer.

Preventative solutions

During cold weather, set the boiler stat to maximum, (Must return to original setting once cold spell is over)

Place the heating on continuous and turn the room stat down to 15ºC overnight or when unoccupied. (Return to normal after cold spell).

Escape of Gas

Should a gas leak or fault be suspected contact your local gas supplier without delay.

Do NOT search for gas leaks with a naked flame.

Cleaning

For normal cleaning simply dust with a dry cloth.

To remove stubborn marks and stains use a damp cloth and mild detergent.

DO NOT use abrasive cleaning materials.

spares & parts online
IBASIS.CO.UK

spares & parts online
IBASIS.CO.UK

Keston Heating, PO Box 103, National Avenue, Kingston Upon Hull, HU5 4JN
Tel. +44 (0) 1482 443005 Fax. +44 (0) 1482 467133. www.keston.co.uk

Keston

Keston pursues a policy of continuing improvement in the design and performance of its products. The right is therefore reserved to vary specification without notice.

spares & parts online IBASIS.CO.UK