Keston

EVERYTHING IS POSSIBLE

INSTALLATION AND SERVICING INSTRUCTIONS

Combi C30 & C35

When replacing any part on this appliance, use only spare parts that you can be assured conform to the safety and performance specification that we require.
Do not use reconditioned or copy parts that have not been clearly authorised by Keston.
For the very latest copy of literature for specification and maintenance practices visit our website www.keston.co.uk where you can download the relevant information in PDF format.

April 2019
222363 A01

ERP DATA

			MODEL	
	SYMBOL	UNITS	30	35
Condensing Boiler	n/a	n/a	yes	yes
Low Temperature Boiler	n/a	n/a	no	no
B1 Boiler	n/a	n/a	no	no
Cogeneration Space Heater	n/a	n/a	no	no
Equipped with a Supplementary Heater	n/a	n/a	no	no
Combination Heater	n/a	n/a	yes	yes
Nominal Heat Output for Space Heating				
Full Load	P_4	kW	24.3	24.3
Part Load	P_1	kW	8.0	8.0
Auxiliary Electricity Consumption				
Full Load	el_{max}	kW	0.032	0.029
Part Load	el_{min}	kW	0.013	0.013
Standby	P_{SB}	kW	0.005	0.005
Seasonal Space Heating Energy Efficiency				
Full Load	η_4	%	90.0	90.0
Part Load	η_1	%	98.7	98.7
Standby Loss	P_{stby}	kW	0.050	0.050
Ignition	P_{ign}	kW	0	0
Emissions Nox (Gross)	$NO_{x,\ pond\ Hs}$	mg/kWh	25	30
Annual Energy Consumption	Q_{HE}	GJ	75	75
Sound Power Level, Indoors	L_{WA}	dB	46	44
Domestic Hot Water				
	Q_{elec}	kWh	0.075	0.074
	η_{WH}	%	78	78
	Q_{fuel}	kWh	7.750	7.700
	AEC	kWh	16	16
	AFC	GJ	6	6

PRODUCT FICHE

KESTON COMBINATION BOILER
Ideal Boilers
ERP DATA

	SYMBOL	UNITS	MODEL	
			30	35
Condensing boiler			Yes	
Seasonal Space heating efficiency class			A	
Rated heat output		kW	24	
Seasonal space heating energy efficiency	η_s	%	94	
Annual energy consumption	Q_{HE}	GJ	75	
Sound power level, indoors	L_{WA}	dB	46	44
Water heating energy efficiency class			A	

Seasonal Space Heating Energy Efficiency of the Boiler	*%	**A**
Temperature control (from fiche of temperature control)	%	**B**

Class I	*Class II*	*Class III*	*Class IV*	*Class V*	*Class VI*	*Class VII*	*Class VIII*
1%	*2%*	*1.5%*	*2%*	*3%*	*4%*	*3.5%*	*5%*

Solar Contribution (from fiche of solar device)

Collector Size (in m²)	Tank Volume (in m³)	Collector Efficiency (in %)	Tank rating A* = 0.95 A = 0.91 B = 0.86 C = 0.83 D-G = 0.81

= ('*III*' x [ ] + '*IV*' x [ ]) x 0.9 x ([ ] / 100 x [ ] = [ ] % **C**

Seasonal Space Heating Energy Efficiency of Package **TOTAL: A+B+C=** [ ] %

Seasonal Space Heating Energy Efficiency Class of Package

G	F	E	D	C	B	A	A+	A++	A+++
< 30%	≥ 30%	≥ 34%	≥ 36%	≥ 75%	≥ 82%	≥ 90%	≥ 98%	≥ 125%	≥ 150%

The energy efficiency of the package of products provided for in this document may not correspond to its actual energy efficiency once installed in a building, as the efficiency is influenced by further factors such as heat loss in the products in relation to the building size and its characteristics

NOTES FOR THE INSTALLER

FOR ANY TECHNICAL QUERIES PLEASE RING THE KESTON INSTALLER/TECHNICAL HELPLINE : 01482 443005

NOTE. BOILER RESTART PROCEDURE -
Press the RESTART button. The boiler will repeat the ignition sequence if a heat demand is present.

DOCUMENT AMENDMENTS

Relevant Installation changes implemented in this book from Mod Level.....A01 (Apr 19)

CONTENTS

1 GENERAL 8
1.1 Introduction 10
1.2 Operation 10
1.3 Safe Handling 10
1.4 Optional Extra Kits 10
1.5 Safety 11
1.6 Safe Handling Of Substances 11
1.7 Location Of Boiler 11
1.8 Gas Supply 12
1.9 Water Circulation System 12
1.10 Boiler Control Interlocks 12
1.11 Electrical Supply 12
1.12 Condensate Drain 12
1.13 Boiler Dimensions, Services & Clearances 13
1.14 System Requirements - Central Heating 14
1.15 System Balancing 15
1.16 Water Treatment 15

2 INSTALLATION 16
2.1 Boiler Assembly - Exploded View 16
2.2 Unpacking 17
2.3 Flue System 18
2.4 Flue Installation Example Keston Combi C30 20
2.5 Flue Installation Example Keston Combi C35 20
2.6 Flue Termination Position 21
2.7 Installing The Boiler 22
2.8 Wall Mounting Template 22
2.9 Preparing The Wall 23
2.10 Fitting The Wall Mounting Plate 23
2.11 Mounting The Boiler 23
2.12 Assembly Practice 24
2.13 Fitting The Flue Sleeve 25
2.14 Condensate 26
2.15 Connections & Filling 28
2.16 Electrical Connections 30
2.17 Installer Wiring 30
2.18 External Wiring 31
2.19 Replacing Pre-Fitted Mains Cable 31
2.20 CH Operation 32
2.21 The Weather Compensation Kit 33
2.22 Wiring Diagram 34
2.23 Commissioning And Testing 35
2.24 Initial Lighting 36
2.25 The Display 37
2.26 General Checks 41
2.27 Restart Procedure 42
2.28 Handing Over 42

3 SERVICING 43
3.1 Servicing Schedule 43
3.2 Boiler Front Panel Removal / Replacement 44
3.3 Fan And Venturi Assembly Removal And Cleaning 44
3.4 Burner Removal And Cleaning 45
3.5 Cleaning The Condensate Trap/Siphon 45
3.6 Cleaning The Heat Exchanger 46
3.7 Reassembly 46
3.8 Replacement Of Components 47
3.9 Fan Replacement 47
3.10 Burner Injector Replacement 48
3.11 Burner Replacement 48
3.12 Return Thermistor Replacement 49
3.13 Ignition Electrode Replacement 49
3.14 Flame Detection Electrode Replacement 50
3.15 Spark Generator Replacement 50
3.16 Gas Control Valve Replacement 50
3.17 Diverter Valve Actuator Replacement 51
3.18 Condensate Trap/Siphon Replacement 51
3.19 PCB Replacement 52
3.20 Draining The Boiler 53
3.21 DHW Flow Turbine Sensor Replacement 53
3.22 Pressure Gauge Replacement 53
3.23 Safety Relief Valve Replacement 54
3.24 Pump Automatic Air Vent Replacement 54
3.25 DHW Filter & Flow Regulator Cleaning/Replacement 54
3.26 Diverter Valve Body Assembly Replacement 55
3.27 DHW Plate Heat Exch. Replacement 55
3.28 Pump Head Replacement 55
3.29 CH Water Pressure Switch Replacement 56
3.30 Flow Thermistor Replacement 56
3.31 Heat Engine Replacement 57
3.32 Expansion Vessel Recharging & Replacement 58

4 FAULT FINDING 59
4.1 Fault Finding Chart Main Menu 59
4.2 Overheat Lockout 61
4.3 Ignition Lockout 61
4.4 Flame On Before Gas Valve On 62
4.5 Low Water Pressure 62
4.6 Flame Loss 62
4.7 Fan Fault 63
4.8 Flow Thermistor Fault 63
4.9 Return Thermistor Fault 63
4.10 Outside Sensor Fault 64
4.11 No CH Operation But DHW Works OK 65
4.12 No HW But CH On 66
4.13 No Display 66

5 SPARE PARTS 67

6 BENCHMARK & COMMISSIONING 68

Table 1 - General Data

			30	35
Gas supply			2H - G20 - 20mbar	
Gas Supply Connection			15mm copper compression	
Injector Size		mm	4.65	4.9
Inlet Connection		DHW	15mm copper compression	
Outlet Connection		DHW	15mm copper compression	
Flow Connection		CH	22mm copper compression	
Return Connection		CH	22mm copper compression	
Flue Terminal Diameter		mm (in)	50 (nominal)	
Average Flue Temp-Mass Flow Rate		(DHW)	68°C - 13g/s	73°C - 15g/s
CO_2 Content (± 0.7)	Max. DHW		9.3%	9.5%
	Min. CH		8.8%	8.9%
Maximum Working Pressure (Sealed Systems)		bar (lb/in^2)	2.5 (36.3)	
Maximum Domestic Hot Water Inlet Pressure		bar (lb/in^2) (kPa)	10.0 (145) (1000)	
Minimum Domestic Hot Water Inlet Pressure*		bar (lb/in^2) (kPa)	1.3 (18.9) (130)	1.3 (18.9)** (130)
Minimum DHW Inlet Pressure to operate at 0.6 bar system pressure		bar	0.5	
Electrical Supply			230 V ~ 50 Hz.	
Power Consumption		W	101	114
Fuse Rating			External : 3A Internal : T4A HRC L250 V	
Water content	CH	litre (gal)	1.2 (0.26)	
	DHW	litre (gal)	0.5 (0.11)	
Packaged Weight		kg	34.40	34.50
Maximum Installation Weight		kg	31.40	31.50
Boiler Casing Size	Height	mm	700	
	Width	mm	395	
	Depth	mm	278	

**Required for maximum flow rate. Boiler operates down to 2 l/min DHW delivery*
*** In areas of low water pressure the DHW restrictor can be removed*

Table 2 - Performance Data - Central Heating

Boiler Input :			Max.	Min. 30	Min. 35
Boiler Input 'Q'	Nett CV	kW	24.3	6.1	7.1
	Gross CV	kW	27.0	6.7	7.9
Gas Consumption		m^3/h	2.512	0.623	0.734
		(ft^3/h)	(89)	(22)	(25.9)
Boiler Output :					
Non Condensing 70°C Mean Water temp.		kW	24.2	6.1	7.1
Condensing 40°C Mean Water temp.		kW	25.6	6.4	7.5
Seasonal efficiency*			SEDBUK 2005	91.1%	91.1%
			SEDBUK 2009	89.6%	89.6%
NOx Classification			CLASS 6		

Table 3 - Performance Data - Domestic Hot Water

Maximum DHW Input :		30	35
Nett CV	kW	30.4	35.4
Gross CV	kW	33.7	39.3
Gas Consumption	m^3/h	3.135	3.658
	(ft^3/h)	(111)	(129)
Maximum	kW	30.3	35.3
DHW Flow Rate	l/min	12.4	14.5
at 35°C temp. rise.	(gpm)	(2.8)	(3.2)
DHW Specific Rate	l/min	14.5	16.9
	(gpm)	(3.2)	(3.7)

* The value is used in the UK Government's Standard Assessment Procedure (SAP) for energy rating of dwellings. The test data from which it has been calculated have been certified by a notified body.

Note. *Gas consumption is calculated using a calorific value of 38.7 MJ/m^3 (1038 Btu/ft^3) gross or 34.9 MJ/m^3 (935 Btu/ft^3) nett*

To obtain the gas consumption at a different calorific value:

a. ***For l/s** - divide the gross heat input (kW) by the gross C.V. of the gas (MJ/m^3)*
b. ***For Btu/h** - multiply the gross heat input (kW) by 26.8*
c. ***For ft^3/h** - divide the gross heat input (Btu/h) by the gross C.V. of the gas (Btu/ft^3)*
d. ***For m^3/h** - multiply l/s by 3.6*

Key to symbols

GB = United Kingdom **IE** = Ireland (Countries of destination)

PMS = Maximum operating pressure of water

C13 C53 = A room sealed appliance designed for connection via ducts to a horizontal or vertical terminal, which admits fresh air to the burner and discharges the products of combustion to the outside through orifices which, in this case, are separate. The fan is up stream of the combustion chamber.

I_{2H} = An appliance designed for use on 2nd Family gas, Group H only.

KESTON COMBI C30 & C35

Natural Gas only

Boiler size	G.C. Appliance No. (Benchmark No.)
30	47-930-07
35	47-930-08

Destination Country: GB, IE

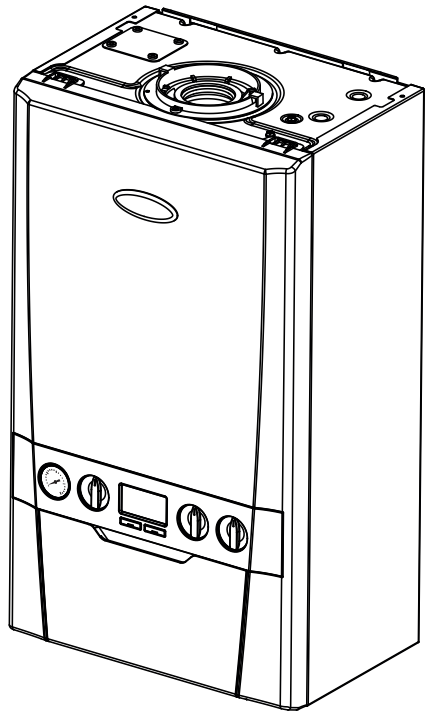

For GB, to comply with Building Regulations Part L1 (Part 6 in Scotland) the boiler should be fitted in accordance with the manufacturer's instructions. Self-certification that the boiler has been installed to comply with Building Regulations can be demonstrated by completing and signing the Benchmark Commissioning Checklist.

Before installing this boiler, read the Code of Practice sheet at the rear of this book.

BENCHMARK COMMISSIONING CHECKLIST DETAILS

Boiler — **Page**

- Make and model 9
- Appliance serial no. on data badge ..... Front Cover
- SEDBUK No. % 8

Controls

- Time and temperature control to heating 31
- Time and temperature control to hot water 31
- Heating zone valves ..... n/a
- TRV's 12
- Auto bypass 12
- Boiler interlock 12

For ..... all boilers

- Flushing to BS.7593 14
- Inhibitor 15

Central heating mode

- Heat input ..... to be calculated
- Burner operating pressure ..... n/a
- Central heating flow temp. ..... measure and record
- Central heating return temp. ..... measure and record

For combination boilers only

- Scale reducer 15

Hot water mode

- Heat input ..... to be calculated
- Max. operating burner pressure ..... n/a
- Max. operating water pressure ..... measure & record
- Cold water inlet temp ..... measure & record
- Hot water outlet temp. ..... measure & record
- Water flow rate at max. setting ..... measure & record

For condensing boilers only

- Condensate drain 26

For all boilers: *complete, sign & hand over to customer*

For assistance see Technical Helpline on the back page

NOTE TO THE INSTALLER: COMPLETE THE BENCHMARK COMMISSIONING CHECKLIST AND LEAVE THESE INSTRUCTIONS WITH APPLIANCE

benchmark COLLECTIVE MARK

THE MARK OF QUALITY FOR THE INSTALLATION, COMMISSIONING AND SERVICING OF DOMESTIC HEATING AND HOT WATER SYSTEMS

1.1 INTRODUCTION

The **Keston Combi** boiler is a wall mounted, full sequence, automatic spark ignition, low water content, fanned flue, high efficiency, condensing, combination gas boiler.

Note. *Due to the high efficiency of the boiler a plume of water vapour will form at the terminal during operation.*

Central heating (CH) output is fully modulating with a range of:

30 6.1 to 24.2kW

35 7.1 to 24.2kW

Instantaneous domestic hot water (DHW) output is also fully modulating with a maximum of :

30 30.3kW

35 35.3kW

The boiler is supplied fully assembled with DHW plate heat exchanger, diverter valve, circulating pump, pressure gauge, safety valve and CH expansion vessel.

Variable CH and DHW temperature controls are fitted on the user control and the boiler features a DHW preheat facility.

The boiler includes as standard:
- Automatic bypass
- Boiler frost protection
- Daily pump and diverter valve exercise.
- Weather Compensation Kit

The boiler casing is of white painted mild steel with a white polymer front panel.

The boiler temperature controls are visible located in the control panel on the front of the boiler.

The heat exchanger is manufactured from cast aluminium.

The boiler is suitable for connection to fully pumped, sealed heating systems ONLY. Adequate arrangements for completely draining the system by provision of drain cocks MUST be provided in the installation pipework.

Pipework from the boiler is routed downwards.

Data Plate

The boiler model and serial number can be located on the bottom of the boiler casing, shown in Frame 1 - Water & Gas Connection Diagram.

1.2 OPERATION

With no demand for CH, the boiler fires only when DHW is drawn off, or periodically for a few seconds without any DHW draw-off, in order to maintain the DHW calorifier in a heated condition. This only occurs if pre-heat knob is in the 'ON' period.

When there is a demand for CH, the heating system is supplied at the selected temperature of between 30°C and 80°C, until DHW is drawn off. The full output from the boiler is then directed via the diverter valve to the plate heat exchanger to supply a nominal DHW draw-off of:

30 12.4 l/min at 35 °C temperature rise.

35 14.5 l/min at 35 °C temperature rise.

When using the outside sensor provided please refer to page 33.

The DHW draw off rate specified above is the nominal that the boiler flow regulator will give. Due to system variations and seasonal temperature fluctuations DHW flow rates/temperature rise will vary, requiring adjustment at the draw off tap.

At low DHW draw-off rates the maximum temperature may exceed 65ºC.

The boiler features a comprehensive diagnostic system which gives detailed information on the boiler status when operating, and performance of key components to aid commissioning and fault finding.

1.3 SAFE HANDLING

This boiler may require 2 or more operatives to move it to its installation site, remove it from its packaging base and during movement into its installation location. Manoeuvring the boiler may include the use of a sack truck and involve lifting, pushing and pulling.

Caution should be exercised during these operations.

Operatives should be knowledgeable in handling techniques when performing these tasks and the following precautions should be considered:

- Grip the boiler at the base.
- Be physically capable.
- Use personal protective equipment as appropriate, e.g. gloves, safety footwear.

During all manoeuvres and handling actions, every attempt should be made to ensure the following unless unavoidable and/or the weight is light.

- Keep back straight.
- Avoid twisting at the waist.
- Avoid upper body/top heavy bending.
- Always grip with the palm of the hand.
- Use designated hand holds.
- Keep load as close to the body as possible.
- Always use assistance if required.

1.4 OPTIONAL EXTRA KITS

Please visit www.keston.co.uk to access the Flue and Accessories Guide for this boiler.

1.5 SAFETY

Current Gas Safety (installation and use) regulations or rules in force:

The appliance is suitable only for installation in GB and IE and should be installed in accordance with the rules in force.

In GB, the installation must be carried out by a Gas Safe Registered Engineer. It must be carried out in accordance with the relevant requirements of the:

- Gas Safety (Installation and Use) Regulations
- The appropriate Building Regulations either The Building Regulations, The Building Regulations (Scotland), Building Regulations (Northern Ireland).
- The Water Fittings Regulations or Water byelaws in Scotland.
- The Current I.E.E. Wiring Regulations.

Where no specific instructions are given, reference should be made to the relevant British Standard Code of Practice.

In IE, the installation must be carried out by a Registered Gas Installer (RGII) and installed in accordance with the current edition of I.S.813 “Domestic Gas Installations”, the current Building Regulations and reference should be made to the current ETCI rules for electrical installation.

Detailed recommendations are contained in the following British Standard Codes of Practice:

BS. 5440:1 Flues (for gas appliances of rated input not exceeding 70 kW).

BS. 5440:2 Ventilation (for gas appliances of rated input not exceeding 70 kW).

BSEN. 12828 Heating Systems in buildings: Design for water based heating systems.

BSEN 12831 Heating Systems in buildings: Method for calculation of the design heat load.

BSEN 14336 Heating Systems in buildings: Installation and commissioning of water based heating systems.

BS. 5546 Installation of gas hot water supplies for domestic purposes (2nd Family Gases)

BS. 6798 Installation of gas fired hot water boilers of rated input not exceeding 70 kW.

BS. 6891 Low pressure installation pipes.

Health & Safety Document No. 635.

The Electricity at Work Regulations, 1989.

The manufacturer’s notes must NOT be taken, in any way, as overriding statutory obligations.

IMPORTANT. These appliances are CE certificated for safety and performance. It is, therefore, important that no external control devices, e.g. flue dampers, economisers etc., are directly connected to these appliances unless covered by these Installation and Servicing Instructions or as otherwise recommended by Keston in writing. If in doubt please enquire.

Any direct connection of a control device not approved by Keston could invalidate the certification and the normal appliance warranty. It could also infringe the Gas Safety Regulations and the above regulations.

1.6 SAFE HANDLING OF SUBSTANCES

No asbestos, mercury or CFCs are included in any part of the boiler or its manufacture.

1.7 LOCATION OF BOILER

The boiler must be installed on a flat and vertical internal wall, capable of adequately supporting the weight of the boiler and any ancillary equipment.

The boiler may be fitted on a combustible wall and insulation between the wall and the boiler is not necessary, unless required by the local authority.

For electrical safety reasons there must be no access available from the back of the boiler.

The boiler must not be fitted outside.

Timber Framed Buildings

If the boiler is to be fitted in a timber framed building it should be fitted in accordance with the Institute of Gas Engineering document IGE/UP/7:2006 Edition 2.

Bathroom Installations

This appliance is rated **IP20.**

The boiler may be installed in any room or internal space, although particular attention is drawn to the requirements of the current IEE (BS.7671) Wiring Regulations and the electrical provisions of the building regulations applicable in Scotland, with respect to the installation of the boiler in a room or internal space containing a bath or shower. For IE reference should be made to the current ETCI rules for electrical installations and I.S. 813.

If the appliance is to be installed in a room containing a bath or shower then, providing water jets are not going to be used for cleaning purposes (as in communal baths/showers), the appliance must be installed beyond Zone 2, as detailed in BS.7671.

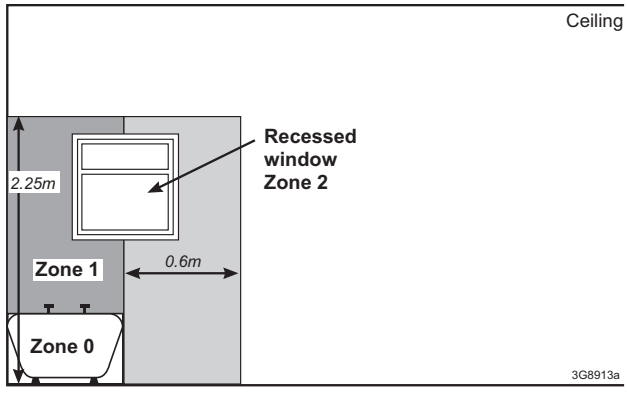

Compartment Installations

A compartment used to enclose the boiler should be designed and constructed specially for this purpose.

An existing cupboard or compartment may be used, provided that it is modified for the purpose.

Braces for compartments must be easily removable for service access.

In both cases, details of essential features of cupboard / compartment design, including airing cupboard installation, are to conform to the following:

- BS 6798 (No cupboard ventilation is required - see ‘Air Supply’ for details).
- The position selected for installation MUST allow adequate space for servicing in front of the boiler.
- For the minimum clearances required for safety and subsequent service, see the wall mounting template and Section 1.13. In addition, sufficient space may be required to allow lifting access to the wall mounting plate.
- The boiler must be installed on a fire resistant surface.

1.8 GAS SUPPLY

The local gas supplier should be consulted, at the installation planning stage, in order to establish the availability of an adequate supply of gas. An existing service pipe must NOT be used without prior consultation with the local gas supplier.

The boiler MUST be installed on a gas supply with a governed meter only.

A gas meter can only be connected by the local gas supplier or by a Gas Safe Registered Engineer. In IE by a Registered Gas Installer (RGII).

An existing meter should be checked, preferably by the gas supplier, to ensure that the meter is adequate to deal with the rate of gas supply required.

It is the responsibility of the Gas Installer to size the gas installation pipework in accordance with BS6891. Whilst the principle of the 1:1 gas valve ensures the Keston Combi range is able to deliver its full output at inlet pressures as low as 14mb, other gas appliances in the property may not be as tolerant. When operating pressures are found to be below the minimum meter outlet of 19mb these should be checked to ensure this is adequate for correct and safe operation.

Allowing for the acceptable pressure loss of 1mb across the installation pipework, it can be assumed that a minimum permitted operating pressure of 18mb will be delivered to the inlet of the appliance. (Reference BS 6400-1 Clause 6.2 Pressure Absorption).

The external gas cock could further reduce the operating pressure when measured at its test point. The pressure drop is relative to the heat input to the boiler (kW), refer to graph below.

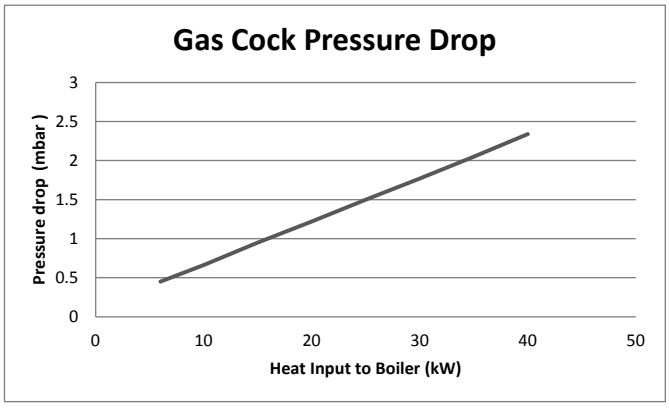

IMPORTANT.
Ensure all gas valve connections are gas tight with a gas soundness check up to the gas control valve.

Installation pipes must be fitted in accordance with BS.6891. In IE refer to IS.813 .

The complete installation MUST be tested for gas tightness and purged as described in the above code.

1.9 WATER CIRCULATION SYSTEM

IMPORTANT.
A minimum length of 1 metre of copper pipe MUST be fitted to both flow and return connections from the boiler before connection to any plastic piping.

The central heating system should be in accordance with BS.6798 and, in addition, for smallbore and microbore systems, BS.5449.

WATER TREATMENT - see Section 1.16

1.10 BOILER CONTROL INTERLOCKS

Central heating systems controls should be installed to ensure the boiler is switched off when there is no demand for heating, in compliance with Building Regulations.

Heating systems utilising full thermostatic radiator valve control of temperature in individual rooms should also be fitted with a room thermostat controlling the temperature in a space served by radiators not fitted with such a valve.

When thermostatic radiator valves are used, the space heating temperature control over a living / dining area or hallway having a heating requirement of at least 10% of the minimum boiler heat output should be achieved using a room thermostat, whilst other rooms are individually controlled by thermostatic radiator valves. However, if the system employs thermostatic radiator valves on all radiators, or two port valves, then a bypass circuit must be fitted with an automatic bypass valve to ensure a flow of water should all valves be in the closed position.

1.11 ELECTRICAL SUPPLY

WARNING.
This appliance must be earthed.
Wiring external to the appliance MUST be in accordance with the current I.E.E. (BS.7671) Wiring Regulations and any local regulations which apply. For IE reference should be made to the current ETCI rules for electrical installations.

The mains supply to the boiler and system wiring centre shall be through one common fused double pole isolator and for new heating systems, and where practical replacement boiler installations, the isolator shall be situated adjacent to the appliance.

1.12 CONDENSATE DRAIN

Refer to Section 2.14

A condensate drain is provided on the boiler. This drain must be connected to a drainage point on site. All pipework and fittings in the condensate drainage system MUST be made of plastic - *no other materials may be used.*

IMPORTANT.

Any external runs must be in accordance with BS 6798.

The drain outlet on the boiler is sized for standard 21.5mm (3/4”) overflow pipe. It is a universal fitting to allow use of different brands of pipework.

1.13 BOILER DIMENSIONS, SERVICES & CLEARANCES

The boiler connections are made on the boiler connection tails. Refer to Section 2.15.

The following minimum clearances must be maintained for operation and servicing.

Additional space will be required for installation, depending upon site conditions.

CLEARANCES

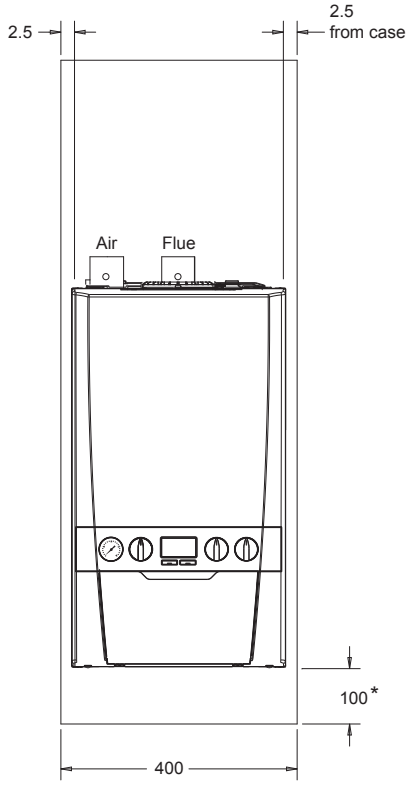

BOILER DIMENSIONS

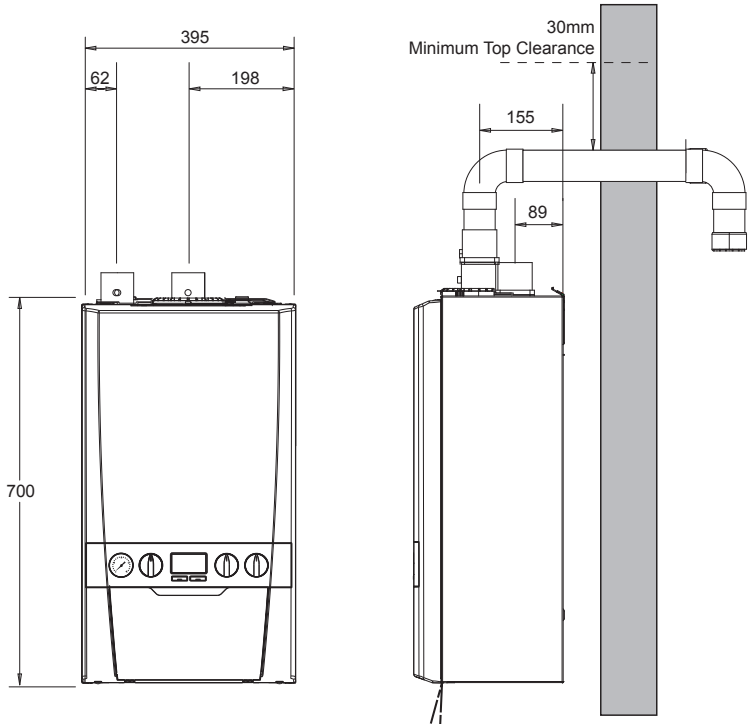

Inset: Water Connections and Gas Connection

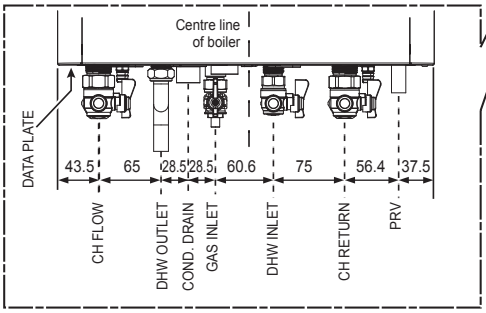

Underside View - Dimensions to Wall

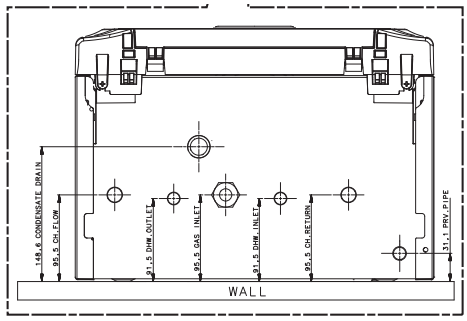

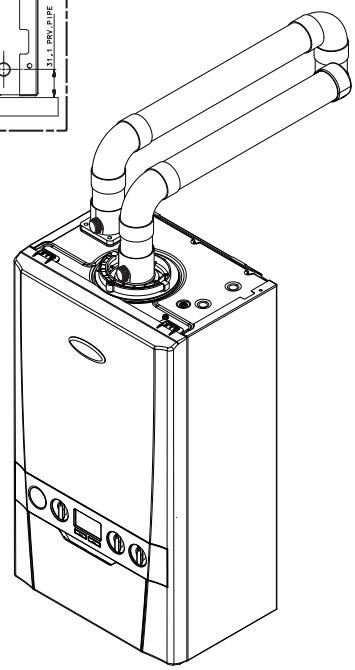

Front clearance
The minimum front clearance when built in to a cupboard is 5mm from the cupboard door but 450mm overall clearance is still required, with the cupboard door open, to allow for servicing.

* **Bottom clearance**
Bottom clearance after installation can be reduced to 5mm.
This must be obtained with an easily removable panel to provide the 100mm clearance required for servicing.

1.14 SYSTEM REQUIREMENTS - Central Heating

Notes

a. *The method of filling, refilling, topping up or flushing sealed primary hot water circuits from the mains via a temporary hose connection is only allowed if acceptable to the local water authority.*

b. *Antifreeze fluid, corrosion and scale inhibitor fluids suitable for use with boilers having aluminium heat exchangers may be used in the central heating system.*

General

1. The installation must comply with all relevant national and local regulations.

2. The installation should be designed to work with flow temperatures of up to 84 °C.

3. All components of the system must be suitable for a working pressure of 3 bar and a maximum design temperature of 110 °C. Extra care should be taken in making all connections so that the risk of leakage is minimised.

The following components are incorporated within the appliance:

a. Circulating pump.

b. Safety valve, with a non-adjustable preset lift pressure of 3 bar.

c. Pressure gauge, covering a range of 0 to 4 bar.

d. An 8-litre expansion vessel, with an initial charge pressure of 0.75 bar.

4. **'Make-up' Water.** Provision must be made for replacing water loss from the system, either :

a. From a manually filled 'make-up' vessel with a readily visible water level. The vessel should be mounted at least 150mm above the highest point of the system and be connected through a non-return valve to the system, fitted at least 150mm below the 'make-up' vessel on the return side of the radiators. ***or***

b. Where access to a 'make-up' vessel would be difficult, by pre-pressurisation of the system.

The maximum cold water capacity of the system should not exceed 143 litres, if not pressurized. However, if the system is to be pressurized, the efficiency of the expansion vessel will be reduced and a larger vessel (or smaller system volume) may be necessary. If the capacity of the vessel is not considered sufficient for this, or for any other reason, an additional vessel MUST be installed on the RETURN to the boiler.

Guidance on vessel sizing is given in Table opposite.

5. Filling

The system may be filled by the following method:

Where the mains pressure is excessive a pressure reducing valve must be used to facilitate filling.

a. Thoroughly flush out the whole system with cold water.

b. Fill and vent the system until the pressure gauge registers 1bar and examine for leaks. Refer to Section 2.15 for filling detail.

c. Check the operation of the safety valve by raising the water pressure until the valve lifts. This should occur within 0.3bar of the preset lift pressure.

d. Release water from the system until the minimum system design pressure is reached; 1.0 bar if the system is to be pre-pressurised.

Safety valve setting	bar	3.0	
Vessel charge pressure	bar	0.5 to 0.75	
System pre-charge pressure	bar	None	1.0
System volume (litres)		**Expansion vessel volume (litres)**	
25		1.6	1.8
50		3.1	3.7
75		4.7	5.5
100		6.3	7.4
125		7.8	9.2
150		9.4	11.0
175		10.9	12.9
190		11.9	14.0
200		12.5	14.7
250		15.6	18.4
300		18.8	22.1
For other system volumes multiply by the factor access		0.063	0.074

Water Flow Rate and Pressure Loss

Max CH Output	kW	24.2
Water flow rate	l/min	17.3
	(gal/min)	(3.8)
Temperature Differential	°C	20
Head available for system	m.w.g. (ft.w.g.)	3.4 (11.1)

DOMESTIC HOT WATER

1. The domestic hot water service must be in accordance with BS 5546 and BS 6700.

2. Refer to Table 1 for minimum and maximum working pressures. In areas of low mains water pressures the domestic hot water regulator may be removed from the DHW flow turbine cartridge. Refer to Section 3.25. The boiler will require the flow rate to be set to obtain a temperature rise of 35°C at the tap furthest from the boiler.

3. The boiler is suitable for connection to most types of washing machine and dishwasher appliances.

4. If the shower/mixer valve does not incorporate non-return valves the following must be followed:

a. The cold inlet to the boiler is fitted with an approved anti-vacuum or syphon non-return valve.

b. Hot and cold water supplies to the shower are of equal pressure.

5. Hard Water Areas
Where the water hardness exceeds 200mg/litre, it is recommended that a proprietary scale reducing device is fitted into the boiler cold supply within the requirements of the local water company.

IMPORTANT

Provision MUST be made to accommodate the expansion of DHW contained within the appliance, if a non-return valve is fitted to the DHW inlet, or a water meter with a non-return valve is installed.

Cold water rising main and pipework in exposed areas need to be suitably lagged to prevent freezing.

1.15 SYSTEM BALANCING

The boiler does not normally need a bypass but at least some radiators on the heating circuit, of load of at least 10% of the minimum boiler output, must be provided with twin lockshield valves so that this minimum heating load is always available. See note regarding thermostatic radiator valves on page 12.

Note. *Systems incorporating zone valves which could completely cut off the flow through the system must also include a bypass.*

BALANCING

1. Set the programmer to ON.

   Close the manual or thermostatic valves on all radiators, leaving the twin lockshield valves (on the radiators referred to above) in the OPEN position.

   Turn up the room thermostat and adjust the lockshield valve to give an uninterrupted flow through the radiator.

   These valves should now be left as set.
2. Open all manual or thermostatic radiator valves and adjust the lockshield valves on the remaining radiators, to give around 20°C temperature drop at each radiator.
3. Adjust the room thermostat and programmer to NORMAL settings.

1.16 WATER TREATMENT

CENTRAL HEATING

The Keston Combi range boiler has an ALUMINIUM alloy heat exchanger.

IMPORTANT.
The application of any other treatment to this product may render the guarantee of Keston Invalid.

Keston recommend Water Treatment in accordance with the Benchmark Guidance Notes on Water Treatment in Central Heating Systems.

If water treatment is used Keston recommend only the use of SCALEMASTER SM-1 PRO, FERNOX, MBI, ADEY MC1, SENTINEL X100 or CALMAG CM100 inhibitors and associated water treatment products, which must be used in accordance with the manufacturers' instructions.

Notes.

1. *It is most important that the correct concentration of the water treatment products is maintained in accordance with the manufacturers' instructions.*
2. *If the boiler is installed in an existing system any unsuitable additives MUST be removed by thorough cleansing. BS 7593:2006 details the steps necessary to clean a domestic heating system.*
3. *In hard water areas, treatment to prevent lime scale may be necessary - however the use of artificially softened water is NOT permitted.*
4. *Under no circumstances should the boiler be fired before the system has been thoroughly flushed.*

DOMESTIC HOT WATER

In hard water areas where mains water can exceed 200ppm Total Hardness (as defined by BS 7593 Table 2) a scale reducing device should be fitted into the boiler cold supply within the requirements of the local water company. The use of artificially softened water, however, is not permitted.
Keston recommend the use of Fernox Quantomat, Sentinel Combiguard or Calmag CalPhos I scale reducing devices together with scalemaster in-line scale inhibitor branded Ideal, which must be used in accordance with the manufacturers' instructions.

For further information contact:

Fernox Cookson Electronics
Forsyth Road, Sheerwater, Woking, Surrey GU21 5RZ
+44 (0) 870 601 500

Sentinel Performance Solutions
The Heath Business & Technical Park, Runcorn, Cheshire WA7 4QX
Tel: 0800 389 4670
www.sentinel-solutions.net

Scalemaster Water Treatment Products
Emerald Way, Stone, Staffordshire ST15 0SR
Tel: +44 (0) 1785 811636

Calmag Ltd.
Unit 3-6, Crown Works, Bradford Road, Sandbeds, Keighley, West Yorkshire BD20 5LN
Tel: +44 (0) 1535 210 320

Adey Professional Heating Solutions
Gloucester Road, Cheltenham GL51 8NR
Tel: +44 (0) 1242 546700

2.1 BOILER ASSEMBLY - EXPLODED VIEW

104	CH Return Valve	**119**	Return Group Manifold	**217**	Burner	**309**	Thermistor Flow
105	CH Flow Valve	**120**	Flow Group Manifold	**218**	Gasket - Burner	**313**	Ignition Lead
106	DHW Inlet & Outlet	**121**	Plate Heat Exchanger	**219**	Sump Clean Out Cover	**320**	Detection Lead
107	Filling Loop Pipe	**124**	Flow Regulator	**223**	Flue Manifold	**324**	Control Box Lid
108	Pump Head	**127**	Flow Sensor/Turbine	**224**	Flue Manifold Top	**325**	Control Box Front
110	Auto Air Vent	**131**	Water Pressure Switch	**227**	Clamp Retaining Flue Turret	**326**	Programmer Insert
111	Divertor Valve Motor	**135**	Pressure Gauge	**228**	Hose Condensate Internal	**401**	Heat Engine
112	Divertor Valve Body & Paddle	**203**	Gas Cock	**229**	Siphon Trap	**503**	Wall Mounting Bracket
113	Pressure Relief Valve	**204**	Pipe - Gas Inlet	**231**	Condensate Outlet Connection	**504**	Front Panel
114	Pipe - PRV Outlet	**205**	Gas Valve	**302**	PCB	**505**	Fascia
115	Pipe - Flow	**206**	Pipe - Gas Injector	**304**	Control Thermistor (Return)	**506**	Bracket - Gas Valve
116	Pipe - Return	**211**	Injector Assy	**306**	Electrode Ignition	**507**	Bracket - Expansion Vessel
117	Pipe - Expansion Vessel	**214**	Venturi	**307**	Electrode Detection		
118	Expansion Vessel	**215**	Fan	**308**	Ignitor Unit		

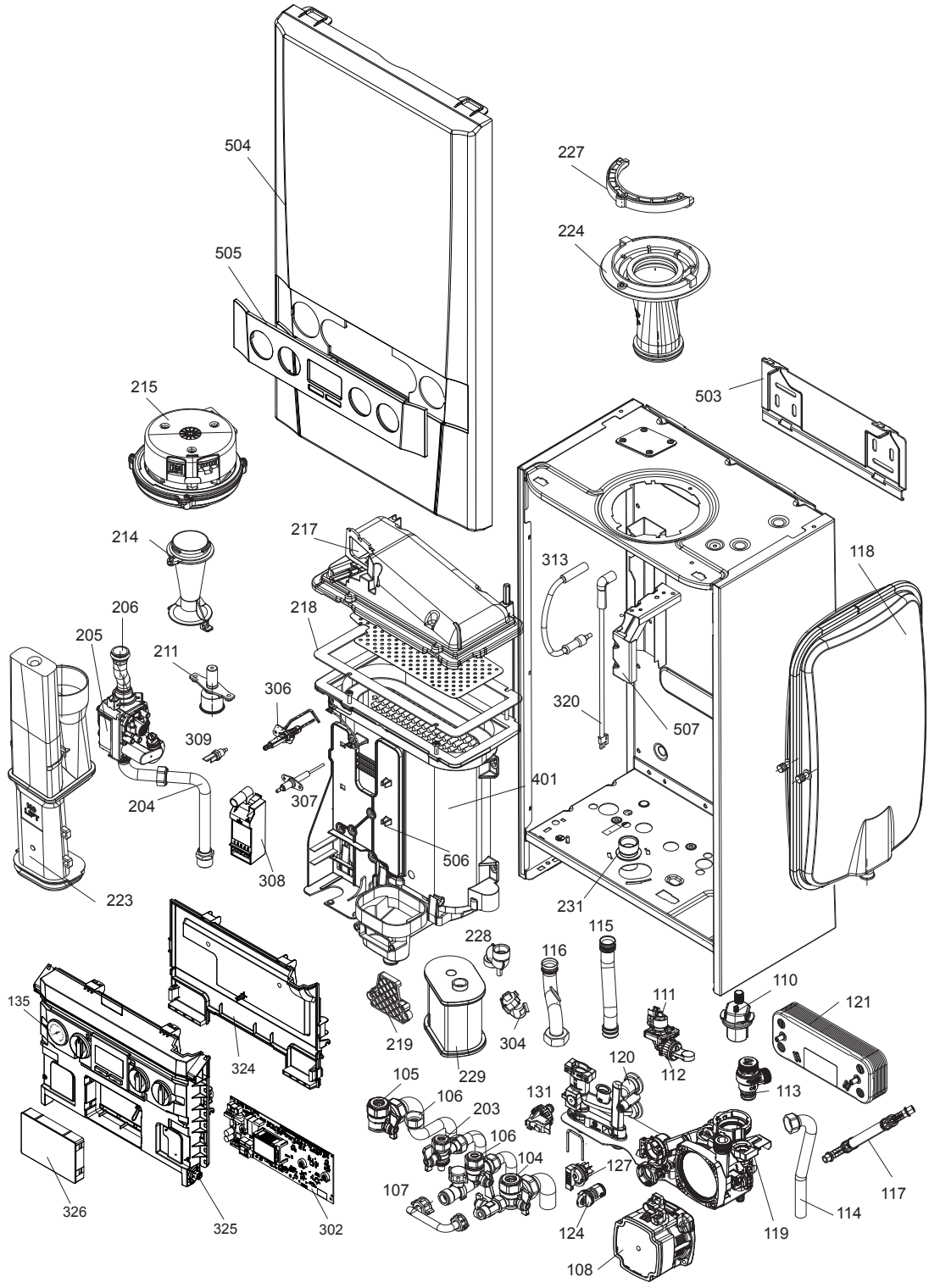

2.2 UNPACKING

Unpack and check the contents.

PACK 1 CONTENTS

A Boiler
B Hardware Pack Box
C Wall Mounting Plate
D These Installation Instructions
E Wall Mounting Template
(located on internal protective packaging)
F Safety Valve Drain Pipe
G Boiler Guarantee / Registration pack

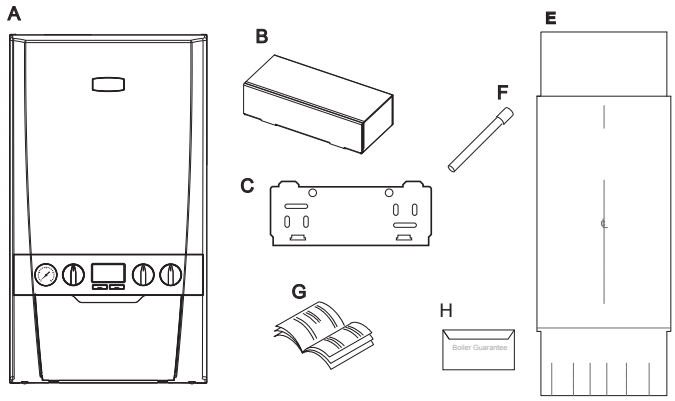

HARDWARE PACK CONTENTS

Gas Valve Pack
1. Pipe - Gas Inlet
2. Washer - Gas (blue)
3. Gas Cock

Filling Loop Pack
1. 3/8" Top Hat Washer
2. Valve Filling Loop
3. Pipe Filling Loop
4. Washer

Return Valve Pack
1. Pipe CH Return
2. Washer
3. Valve Return

DHW Pack
1. 1/2" Top Hat Washer (x2)
2. Cap Female
3. Plug Male and Clip
4. Nut G1/2 16 Brass (Flat)
5. Washer 18.5 x 11 x 11.8 (x2)
6. Pipe DHW Outlet
7. Pipe DHW Inlet
8. Valve DHW Inlet

Accessory Pack
1. Screw (x2)
2. Wallplug (x2)
3. Turret Clamp Screw (spare)

Flow Valve Pack
1. Pipe CH Flow
2. Washer CH
3. Valve Flow

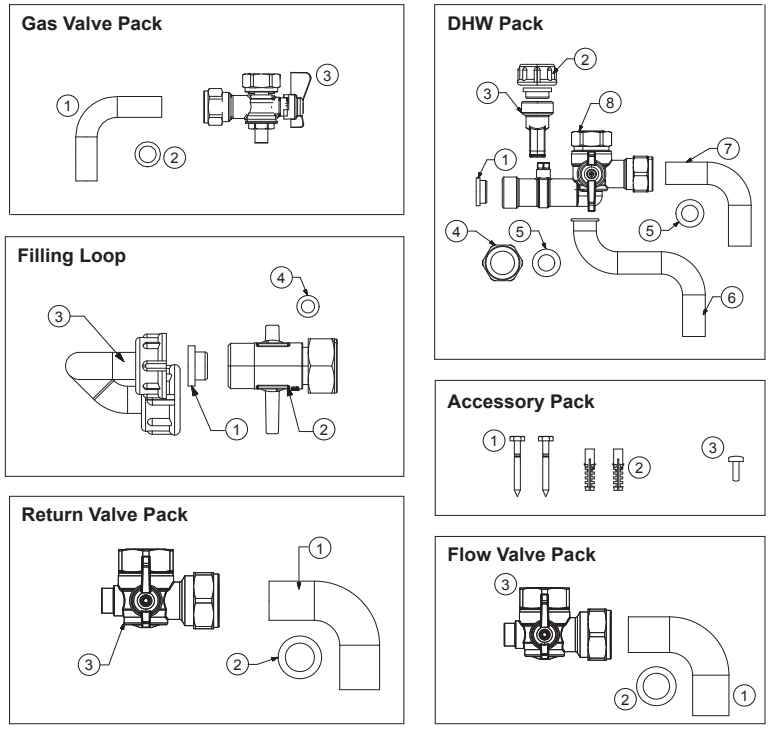

FLUE PACK CONTENTS

A Flue Adaptor
B Air Spigot
C Terminals - 2 off
D Flue Sleeve
E Wall Plate
F Wall Seal
G Outside Sensor
H Screws - 4 off
J Wall Plugs - 4 off

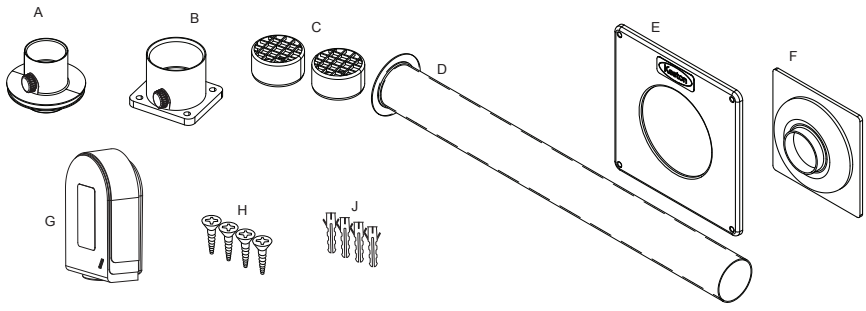

FLUE OUTLET

2.3 FLUE SYSTEM

IMPORTANT

When installing a replacement boiler a new flue system is recommended. However re-using the existing boiler flue installation is acceptable if the installer checks and confirms:

- The flue pipe is the approved Marley/Polypipe/Terrain/Wavin 50mm muPVC solvent weld flue system
- The flue installation is upgraded to the most recent flue standards taking particular care to comply with flues in voids
- A risk assessment is conducted to confirm the effectiveness of the flue
- The existing flue will last the lifetime of the new appliance

DESIGN

Individual air supply and flue outlet pipes are used as standard.

The material approved for this application which MUST be used are:

- Marley muPVC Solvent Weld System (50mm)
- Polypipe System 2000 muPVC solvent weld (50mm)
- Polypipe Terrain 200 muPVC Solvent Weld System (50mm)
- Wavin OSMA PVC-C Solvent Weld System (50mm)

to BS5255 and/or BSEN1566-11 and BSEN1329, are the only systems approved for this application.

The following pipe and fittings are approved.

Polypipe System 2000 muPVC Solvent Weld System (50mm)	
Polypipe Code	
MU 301	*4m length muPVC wastepipe 5/225*
MU 313	*50mm x 45 deg muPVC obtuse bend*
MU 314	*50mm x 92.5 deg muPVC swept bend*
MU 310	*50mm muPVC straight coupling*
MU 316	*50mm x 92.5 deg muPVC swept tee*

Polypipe Terrain Solvent Weld System (50mm)	
Polypipe Code	
200.2.40	*4m length muPVC wastepipe*
201.2.135	*50mm x 135 deg muPVC bend*
200.2.91	*50mm x 91 1/4 deg muPVC swept bend*
210.2	*50mm muPVC straight coupling*
204.2.135	*50mm muPVC swept tee*

Marley muPVC Solvent Weld System (50mm)	
Marley Code	
KP 304	*50mm x 4m double spigot pipe*
KP32	*50mm x 45 deg bend*
KSC3	*50mm straight coupling*
KB3	*50mm x 88.5 deg bend*
KT3	*50mm swept tee*

Wavin OSMA PVC-C Solvent Weld System (50mm)	
Wavin Code	
2M073	*3M lenght waste pipe 50mm*
2M163	*50mm x 45 deg bend*
2M161	*50mm x 87.5 deg bend*
2M104	*50mm double socket*
2M190	*50mm x 8.75 tee*

Consideration MUST be given to expansion and contraction of the flue. Refer to Assembly Practice (Section 2.12) in this installation and Servicing Instructions for further guidance.

continued.....

FLUE SYSTEM..... CONT'D

TERMINATION OF THE FLUE AND AIR

The flue and air pipes may terminate independently through any external walls within the same dwelling except on opposing walls, within the maximum lengths shown in graph below. (Alternatively a vertical flue pipe termination is acceptable.)

The air pipe must have an elbow and 150mm length of pipe directed downwards with a termination grill fitted.

The air pipe can be situated at the side or beneath the flue pipe to a minimum dimension of 140mm (see diagram right). It must not be sited above the flue pipe.

The flue and air pipes must extend by at least 40mm from the wall surface.

Condensing boilers emit a visible plume of water vapour from the flue terminal, this is normal. It is the responsibility of the installer to judiciously select a terminal location that does not cause a nuisance.

If either the flue or air terminal is below a height of 2m from ground level a terminal guard must be fitted.

Note. *Any vertical termination MUST have the terminals fitted and the air intake comply with the dimensions above.*

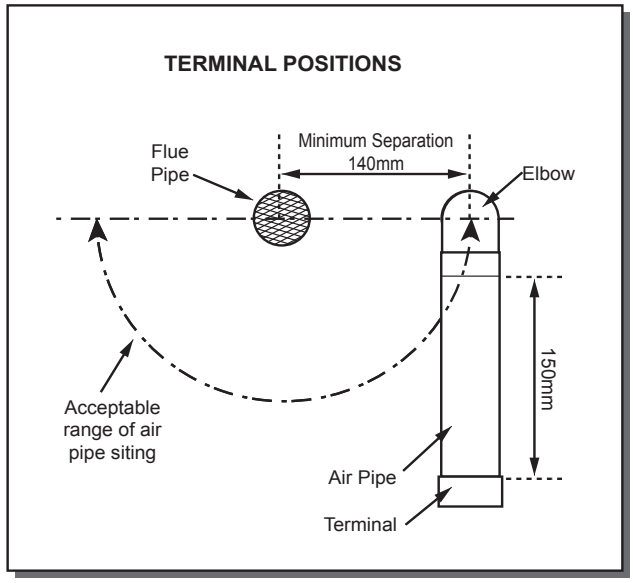

MAXIMUM LENGTHS

Due to the resistance presented by extended flue length a slight reduction in maximum boiler output will occur where combined flue and air lengths in excess of 18.0m and 16.0m (50mm muPVC) are used. In such cases the boiler output will be reduced by 0.6% and 0.8% per additional metre.
The maximum lengths of both air inlet pipe and flue outlet pipe, when no bends are used, are as detailed in graphs below. However, each bend used has an equivalent length that must be deducted from the maximum straight length stated in graphs below. Knuckle bends must not be fitted.
A 92.5º swept elbow is equivalent to 1.0m straight length. A 45º bend is equivalent to 0.5m straight length.
It is possible to have variable flue and air lengths as described within the shaded area of graphs below.

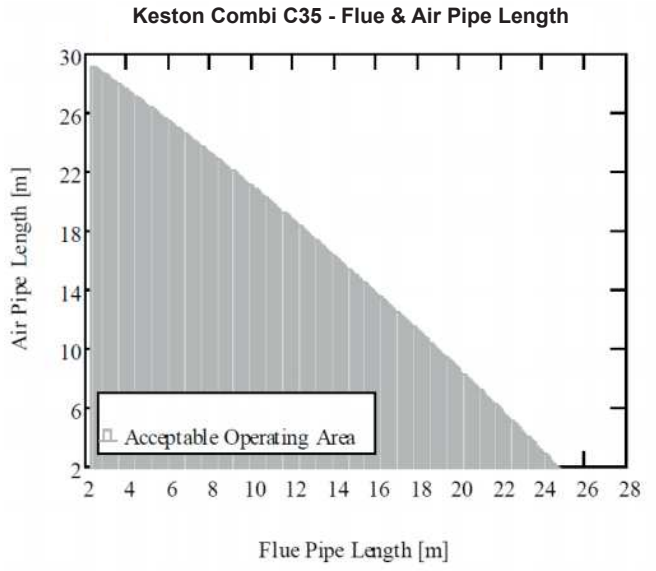

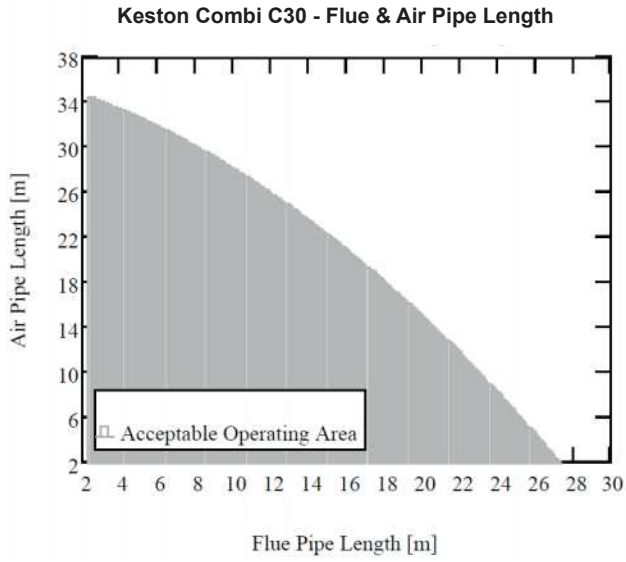

SLOPE

'Horizontal' flue outlet pipework MUST slope at least 1.5 degrees (26mm per metre run) downwards towards the boiler. Pipework can be vertical. Only swept elbows can be used.

Air inlet pipework can be truly horizontal or vertical, or sloping in a downward direction towards the boiler but in each case rain, etc., **must** be prevented from entering the pipe. **There must be no troughs in any of the pipework, whether it be air inlet or flue outlet.**

2.4 FLUE INSTALLATION EXAMPLE KESTON COMBI C30

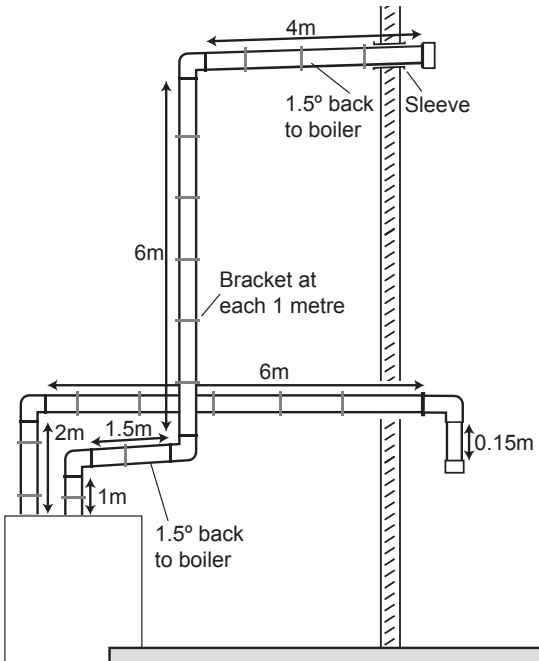

Calculations

Air	Flue
Elbows 2 x 1m = 2m	Elbows 3 x 1m = 3m
Straights 6+2+0.15 = 8.15m	Straights 4+6+1.5+1 = 12.5m
Total = 10.15m	Total = 15.5m

Overall Flue / Air = 25.65m

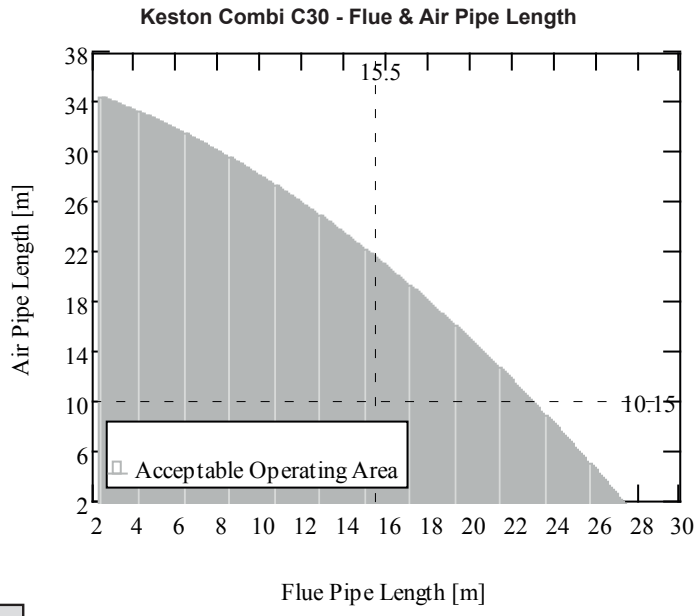

2.5 FLUE INSTALLATION EXAMPLE KESTON COMBI C35

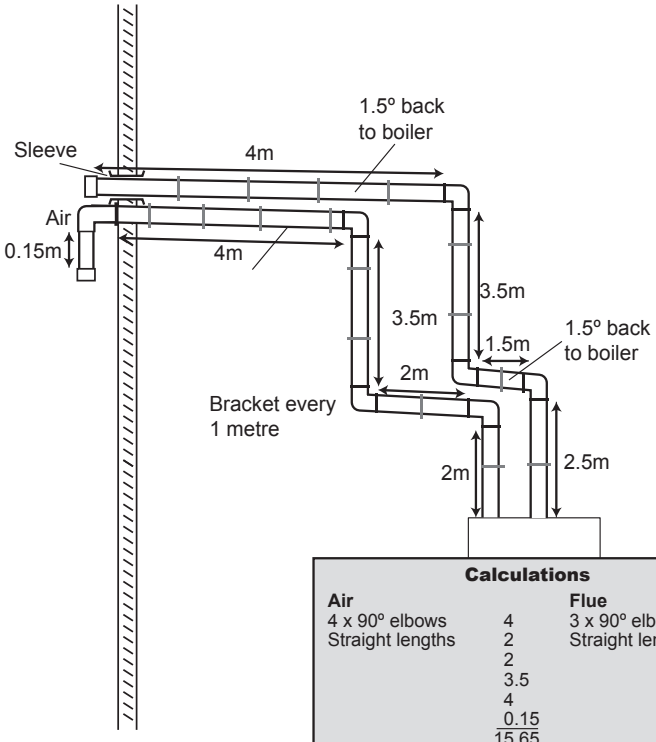

Calculations

Air		Flue	
4 x 90º elbows	4	3 x 90º elbows	3
Straight lengths	2	Straight lengths	2.5
	2		1.5
	3.5		3.5
	4		4
	0.15		
	15.65		14.5

Overall Flue / Air = 30.15m

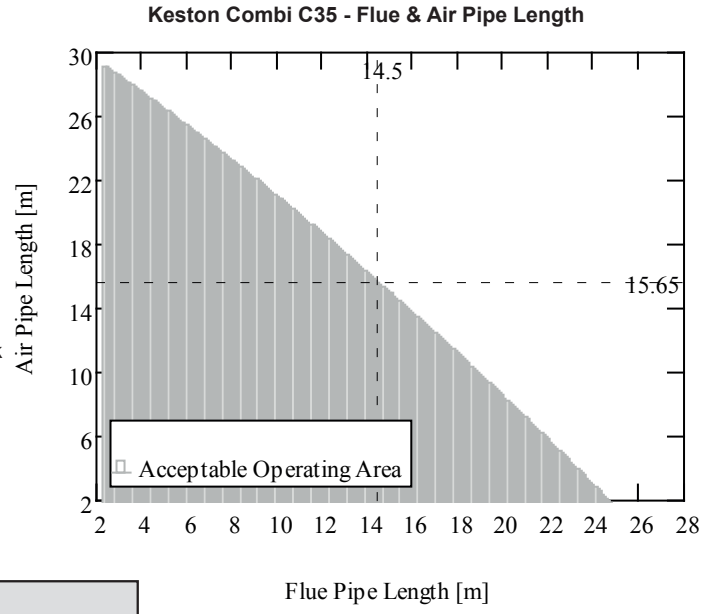

FLUE OUTLET

2.6 FLUE TERMINATION POSITION

Twin Flue Positions		When Flue & Air Terminals are less than 500mm apart		When Flue & Air Terminals are more than 500mm apart	
		Flue min. spacing	Air min. spacing	Flue min. spacing	Air min. spacing
A	Below an opening (1)	300mm	50mm	300mm	50mm
B	Above an opening (1)	300mm	50mm	300mm	50mm
C	Horizontally to an opening	300mm	50mm	300mm	50mm
D	Below gutters,soil pipes or drain pipes	75mm	75mm	75mm	75mm
E	Below eaves	200mm	50mm	200mm	50mm
F	Below balcony or car port roof	200mm	50mm	200mm	50mm
G	From a vertical drain pipe or soil pipe	150mm	50mm	150mm	50mm
H	From an internal or external corner or to a boundary alongside the terminal (2)	200mm	50mm	200mm	50mm
I	Above ground,roof or balcony level	300mm	100mm	300mm	100mm
J	From a surface or boundary facing the terminal	600mm	100mm	600mm	100mm
K	From a terminal facing a terminal	1200mm	1200mm	1200mm	1200mm
L	From an opening in the car port into the building	1200mm	100mm	1200mm	100mm
M	Vertically from a terminal on the same wall	1500mm	1500mm	1500mm	1500mm
N	Horizontally from a terminal on the same wall	300mm	300mm	300mm	300mm
O	From the wall on which the terminal is mounted	40mm	40mm	40mm	40mm
P	From a vertical structure on the roof	NA	NA	300mm	NA
Q	Above intersection with roof	NA	NA	150mm	NA
,(1)	In addition, for temperature and structural reasons, the terminal should not be nearer than 150 mm (fanned draught) to an opening in the building fabric formed for the purpose of accommodating a built-in element such as a window frame				
,(2)	The reference to external corners does not apply to building protrusions not exceeding 450 mm, such as disused chimneys on external walls for: fanned draught appliances				

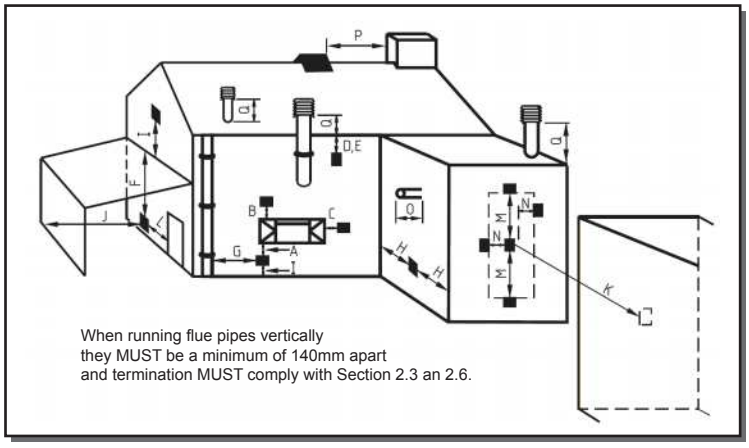

When running flue pipes vertically
they MUST be a minimum of 140mm apart
and termination MUST comply with Section 2.3 an 2.6.

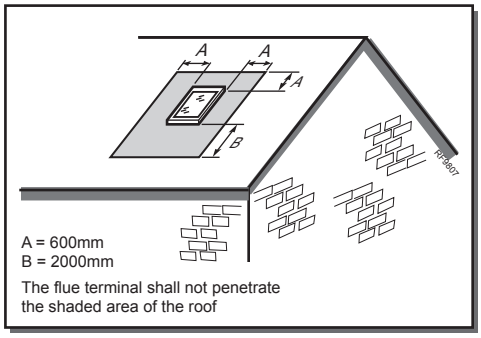

A = 600mm
B = 2000mm
The flue terminal shall not penetrate
the shaded area of the roof

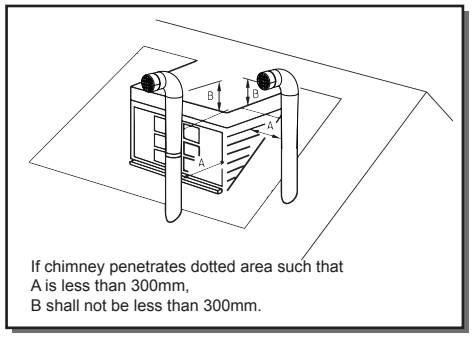

If chimney penetrates dotted area such that
A is less than 300mm,
B shall not be less than 300mm.

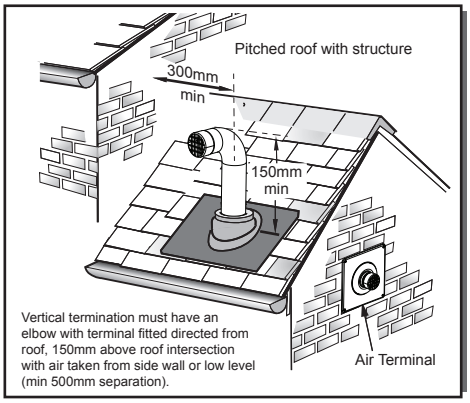

Vertical termination must have an
elbow with terminal fitted directed from
roof, 150mm above roof intersection
with air taken from side wall or low level
(min 500mm separation).

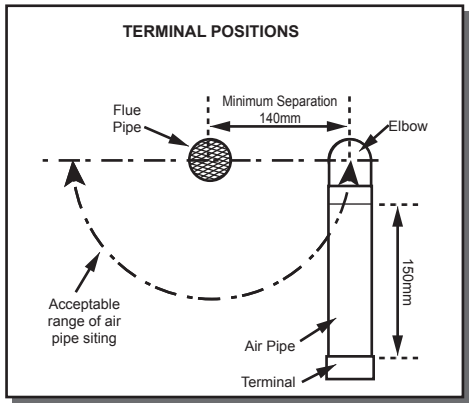

continued . . . . . .

FLUE OUTLET

.....FLUE TERMINATION

GENERAL INSTALLATIONS

All parts of the system must be constructed in accordance with BS 5440 Part 1, except where specifically mentioned in these instructions.

All pipe work must be adequately supported.

All joints other than approved push-on or plastic compression connectors must be made and sealed with solvent cement suitable for muPVC pipes and conforming to BS 6209: 1982.

Consideration must be given to Corgi/Gas Safe bulletin TB200/TB008 regarding flues in voids.

The boiler casing must always be correctly fitted to the boiler when leaving the appliance operational.

External wall faces and any internal faces of cavity walls must be good.

AIR SUPPLY

The Keston Combi is a room-sealed appliance and therefore does not require purpose provided ventilation to the boiler room for combustion air.

COMPARTMENT INSTALLATION

Due to the low casing temperatures generated by the boiler, no compartment ventilation is required. However, the cupboard or compartment must not be used for storage.

2.7 INSTALLING THE BOILER

Installation of the boiler is straightforward but consideration must be given to access to allow flue and air pipes to be pushed through walls and ceilings. The order in which the components are installed will depend upon particular site conditions, but in general it will be easiest and most accurate to install the boiler and then build up the flue outlet and air inlet pipes to the terminal - this is the sequence described.

2.8 WALL MOUNTING TEMPLATE

The wall mounting template is located on the internal protective packaging.

Note.
The template shows the positions of the fixing holes and the position of the air and flue connections. Care MUST be taken to ensure the correct holes are drilled.

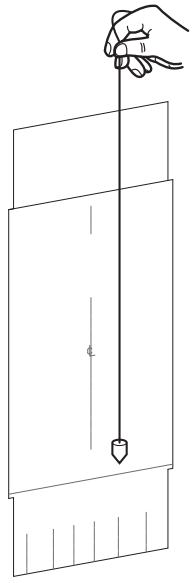

1. Tape template into the selected position. Ensure squareness by hanging a plumbline as shown.
2. Mark onto the wall the following:
   - **a** The wall mounting plate screw positions (choose one from each group).
   - **b** The position of the air and flue when exiting straight out of the wall where the boiler is mounted.

Note. *Mark the centre of the hole as well as the circumference.*

3. Remove the template from the wall.

2.9 PREPARING THE WALL

IMPORTANT.

Ensure that, during the cutting operation, masonry falling outside of the building does not cause damage or personal injury.

1. Cut the flue and air holes (preferably with 60mm core bore tool) ensuring the holes are square to the wall.
2. Drill 2 holes with a 7.5mm / 8mm masonry drill and insert the plastic plugs, provided, for the wall mounting plate.
3. Locate 2 No.14 x 50mm screws in the wall mounting plate (one at each side, in any of the 3 holes provided at each side) and screw home.

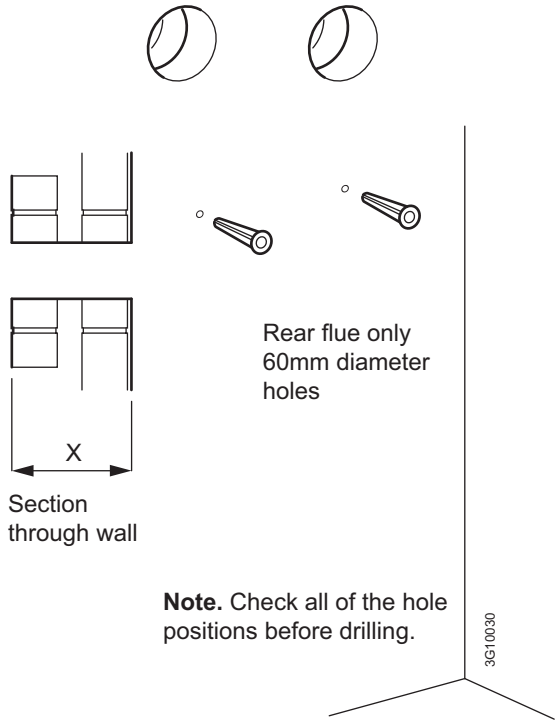

Note. Check all of the hole positions before drilling.

2.10 FITTING THE WALL MOUNTING PLATE

Screw the wall mounting plate to the wall using 2 wall plugs (previously fitted) with the 2 screws provided.

Choose one of the 2 sets of slots in left and right bank. Ensuring that at least one of the screws is fitted into a top slot.

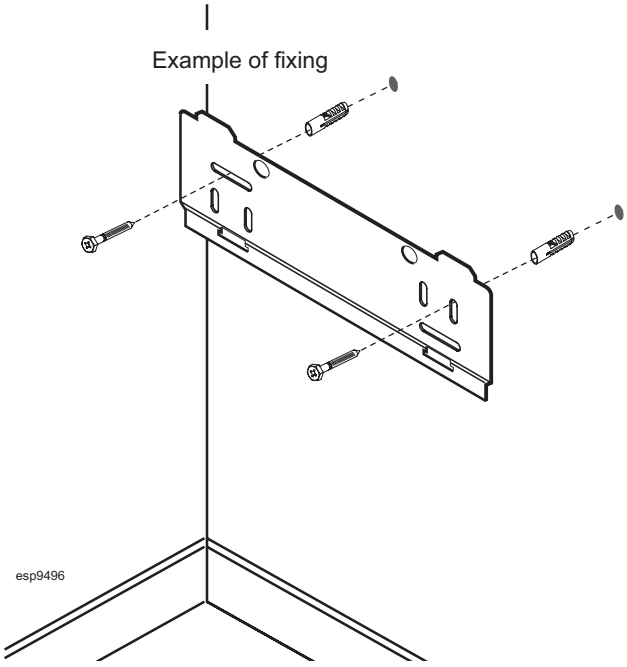

2.11 MOUNTING THE BOILER

1. Ensure the plastic plugs are removed from both the CH and DHW connections before mounting the boiler.
2. Lift the boiler onto the wall mounting plate (refer to the Introduction section for safe handling advice), locating it over the two tabs.

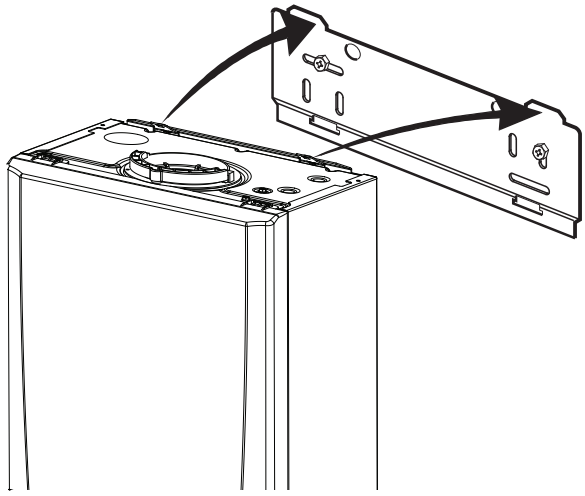

2.12 ASSEMBLY PRACTICE

Remove all plastic debris and burrs when installing air intake piping. Plastic fillings caused by cutting muPVC pipe must not be allowed to be drawn into the combustion air blower. Prevent dust entering the air intake when cutting on building sites. Blower failure which is determined to be caused by plastic filings or other debris will not be covered by guarantee.

INSTALLING FLUE AND AIR PIPES

Important - When installing a replacement boiler, a new flue system is recommended.

However re-using the existing boiler flue installation is acceptable if the installer adheres to Section 2.3 Flue System - Important, and also checks and confirms the following:

- Remove the flue adaptor and air spigot from the flue pack supplied with the boiler.
- Remove boiler front panel - Section 3.2.
- Remove air intake blanking plate by unscrewing 4 x M5 screws and put to one side, leaving sponge gasket in place.
- Fix air spigot to boiler using the 4 M5 screws, see diag. below. Ensure sponge gasket is in place and not damaged.
- Ensure the condense trap/siphon is filled with water.
- Insert the flue adaptor into the flue manifold on the top of the boiler and secure using the clamp provided in the packaging box, see diagram below.
- Measure, cut and check the air and flue pipes to pass to the exit from the wall(s) or ceiling.
- Always thoroughly deburr all pipes and most important, remove shavings from within the pipe.
- Assemble, using solvent weld cement, the pipework from the boiler connections to the exit from the first wall/ceiling, (remount the boiler if removed). When pushing pipe through walls, ensure grit and dust is not allowed to enter the pipe.

  Ensure pipes are fully engaged into sockets and solvent welded with no leaks.
- Using the same methods drill any further holes (always covering existing pipework), cut and assemble the pipework.
- From outside, complete the two terminations - See Section 2.3 Flue System and make good all holes. (Wall sealing collars are available to make good hole areas on the wall face (part number C.08.0.00.07.0).
- **Support any pipes whose route could be displaced either of its own accord or by accident. Any horizontal run over 1m or vertical runs of any length must always be supported. Brackets should be placed at intervals of approximately 1m. Brackets should be loose enough on the pipe to allow thermal expansion and contraction movement.**
- **Flue pipework through walls MUST be sleeved to allow thermal expansion and contraction movement.**
- Check all connections for security and re-seal any joints using solvent cement where soundness may be in doubt.

Note. It is equally important to seal the air inlet with solvent cement as the flue outlet pipe joints.

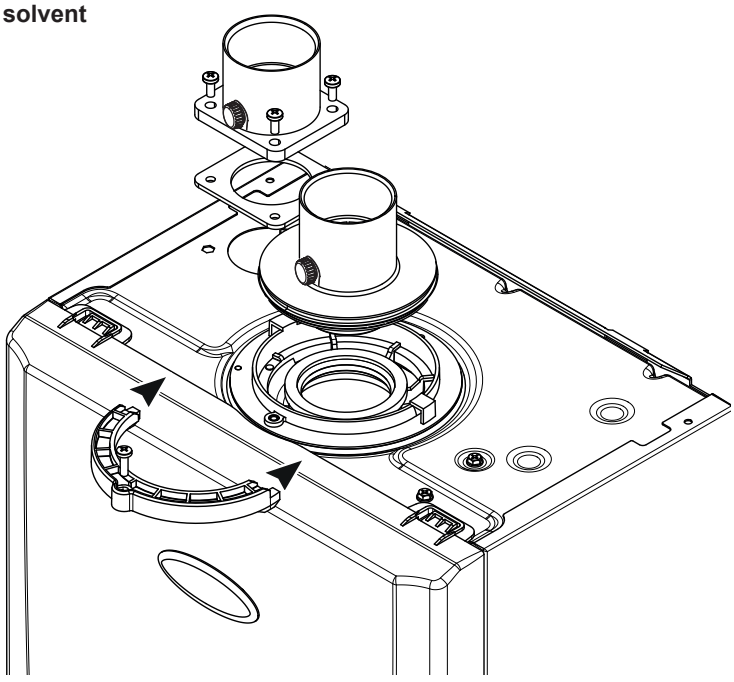

FLUE OUTLET

2.13 FITTING THE FLUE SLEEVE

1. Cut hole in wall.
2. Measure wall Thickness
3. Cut sleeve length to match wall thickness & remove burrs.
4. Grout sleeve into wall with flange on external face.
5. Slide flue pipe into sleeve, checking it is free to slide.
6. Slide Flexible wall seal over flue pipe and push centre ring up to sleeve flange when cold.
7. Locate wall plate over flexible wall seal and clamp in place using the raw plug pack.
8. Affix flue terminal
9. During boiler test check that the flue end is free to expand and contract with flexible wall seal.

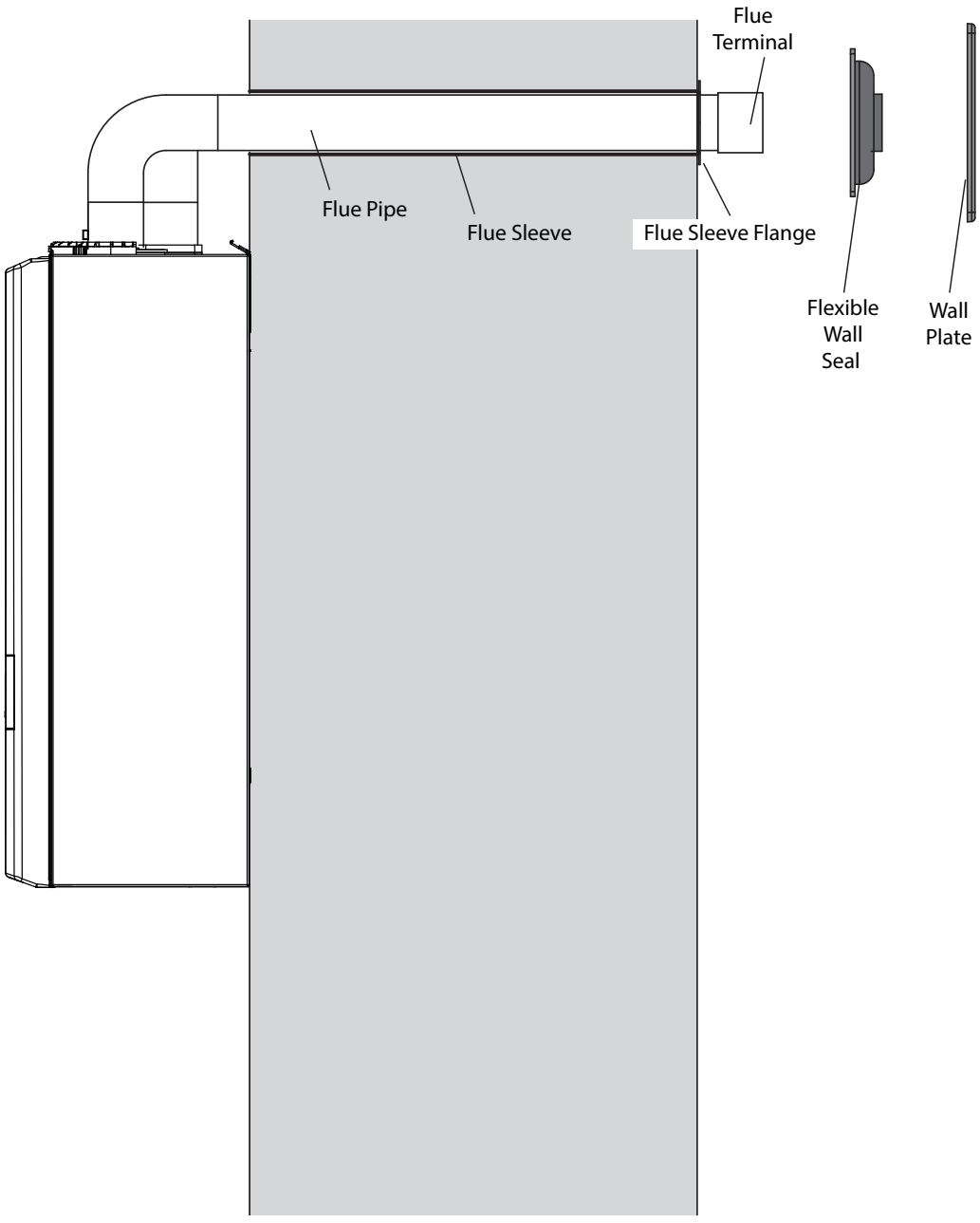

2.14 CONDENSATE

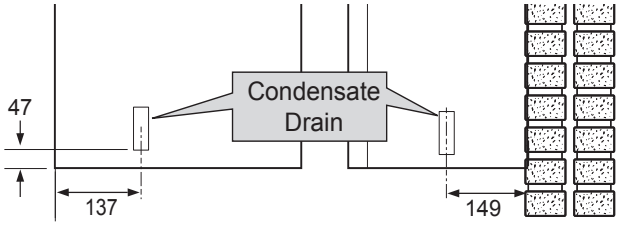

This appliance is fitted with a siphonic 75mm condensate trap system that requires filling before operating the appliance for the first time or after maintenance.

All condensate pipework should conform to the following:

a. Where a new or replacement boiler is being installed, access to an internal 'gravity discharge' termination should be one of the main factors considered in determining boiler location.
b. Plastic with push fit or solvent connections.
c. Internal plastic pipe work a minimum of 19mm ID (typically 22mm OD)
d. External plastic pipe must be a minimum of 30mm ID (typically 32 OD) before it passes through the sleeved wall.
e. All horizontal pipe runs, must fall a minimum of 45mm per metre away from the Boiler.
f. External & unheated pipe work should be kept to a minimum and insulated with Class "O" waterproof pipe insulation.
g. All installations must be carried out in accordance to the relevant connection methods as shown in the "Condensate installation diagrams" & BS6798:2009
h. Pipe work must be installed so that it does not allow spillage into the dwelling in the event of a blockage (through freezing)
i. All internal burrs should be removed from the pipe work and any fittings.

In order to minimise the risk of freezing during prolonged very cold spells, one of the following methods of terminating condensate drainage pipe should be adopted.

Internal Drain Connections

Wherever possible, the condensate drainage pipe should be routed to drain by gravity to a suitable internal foul water discharge point such as an internal soil and vent stack or kitchen or bathroom waste pipe etc. See Figs 1 and 2.

Condensate Pump

Where gravity discharge to an internal termination is not physically possible or where very long internal pipe runs would be required to reach a suitable discharge point, a condensate pump of a specification recommended by the boiler or pump manufacturer should be used terminating into a suitable internal foul water discharge point such as an internal soil and vent stack or internal kitchen or bathroom waste pipe etc. (fig 3).

External Drain Connections

The use of an externally run condensate drainage pipe should only be considered after exhausting all internal termination options as described previously. An external system must terminate at a suitable foul water discharge point or purpose designed soak away. If an external system is chosen then the following measures must be adopted:

The external pipe run should be kept to a minimum using the most direct and "most vertical" route possible to the discharge point, with no horizontal sections in which condensate might collect.

- For connections to an external soil/vent stack see Fig 4. Insulation measures as described should be used.
- When a rainwater downpipe is used, an air break must be installed between the condensate drainage pipe and the downpipe to avoid reverse flow of rainwater into the boiler should the downpipe become flooded or frozen, see Fig 5.
- Where the condensate drain pipe terminates in a purpose designed soak away (see BS 6798) any above ground condensate drain pipe sections should be run and insulated as described above. See Fig 6.
- Where the condensate drain pipe terminates over an open foul drain or gully, the pipe should terminate below the grating level, but above water level, to minimise "wind chill" at the open end. The use of a drain cover (as used to prevent blockage by leaves) may offer further prevention from wind chill.

Unheated Internal Areas

Internal condensate drain pipes run in unheated areas, e.g. lofts basements and garages, should be treated as external pipe.

Ensure the customer is aware of the effects created by a frozen condensate and is shown where this information can be found in the user manual.

Figure 1 - Connection of Condensate Drainage Pipe to Internal Soil & Vent Stack

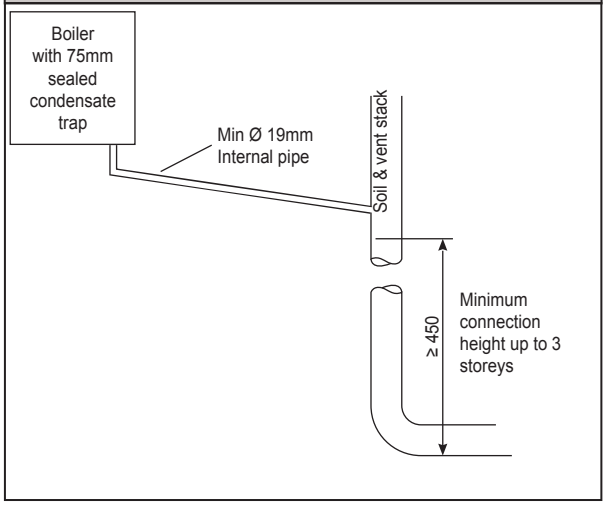

Figure 2 - Connection of a Condensate Drainage Pipe Downstream of a Sink, Basin, Bath or Shower Water Trap to Internal Soil Vent Stack

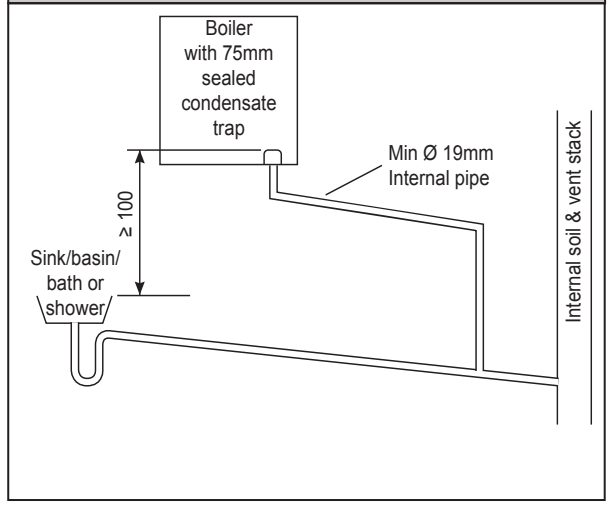

continued . . . . .

CONDENSATE..... CONT'D

Figure 3 - Connection of a Condensate Pump Typical Method (see manufacturers detailed instructions)

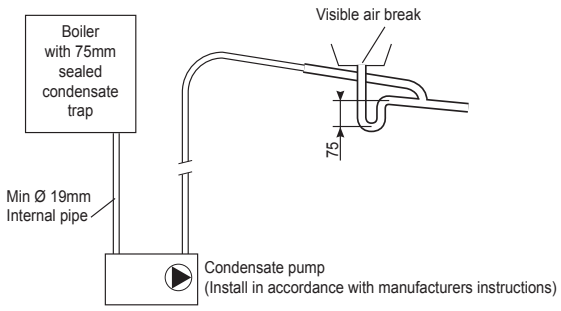

Figure 4 - Connection of condensate Drainage Pipe to External Soil & Vent Stack

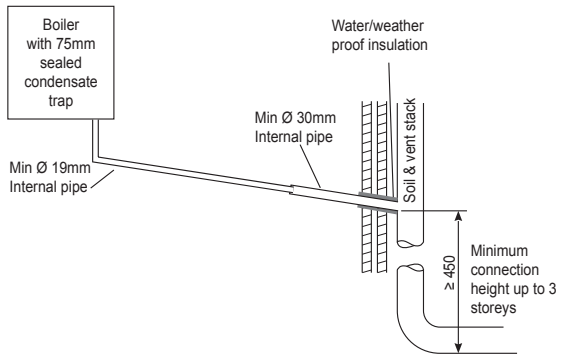

Figure 5 - Connection of a Condensate Drainage Pipe to an External Rainwater Downpipe (only combined foul/rainwater drain)

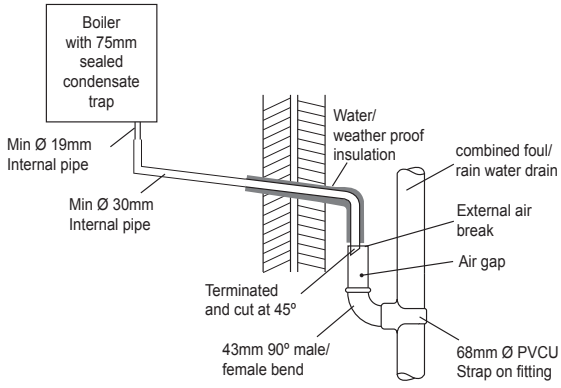

Figure 6 - Connection of a Condensate Drainage Pipe to an External Purpose Made Soak Away.

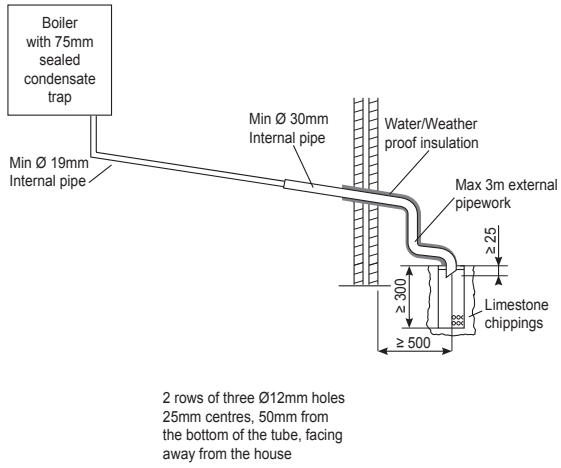

2.15 CONNECTIONS & FILLING

NOTES.
Ensure all boss blanking plugs are removed before connecting hardware. Each valve must be fitted to the correct boss as shown in the picture.

Ensure each union is fitted with fibre seals provided.

Do not subject any of the isolating valves to heat as the seals may be damaged.

Note. *The domestic hot water flow rate is automatically regulated to a maximum:*

30 = 12.4 l/m (2.8 gpm)
35 = 14.5 l/m (3.2 gpm)

WATER CONNECTIONS CH

1. Connect the CH flow service valve (black handle) and copper tail provided in the hardware pack to the threaded boss connection provided at the lower rear of the boiler.
2. Connect the CH rtn. valve (black handle) and copper tail.

WATER CONNECTIONS DHW

1. Fit the DHW inlet service valve (blue handle) and copper tail to the threaded boss connection ensuring the seal provided is correctly located.
2. Fit the DHW outlet pipe tail to DHW outlet connection, ensuring the seal provided is correctly located.
3. Fit the filling loop provided between the DHW inlet valve and the CH return valve.

GAS CONNECTION

IMPORTANT. The gas service cock is sealed with a non-metallic blue fibre washer, which must not be overheated when making capillary connections. Refer to Section 1.16 for details of the position of the gas connection.

For additional gas supply info refer to “Gas Supply” on page 10.

SAFETY VALVE DRAIN

The safety valve connection, located at the bottom right-hand side of the boiler, comprises a 15mm diameter stub pipe.

The Installer to provide a compression joint on the end of the stub pipe. This assists with pipe removal when servicing.

The discharge pipe should be positioned so that the discharge of water or steam cannot create a hazard to the occupants of the premises or damage the electrical components and wiring.

A purpose made safety valve drain pipe is provided with the boiler to allow safe discharge through a wall to the outside of the building. This is particularly relevant to ‘high rise’ installations but can be used for all installations.

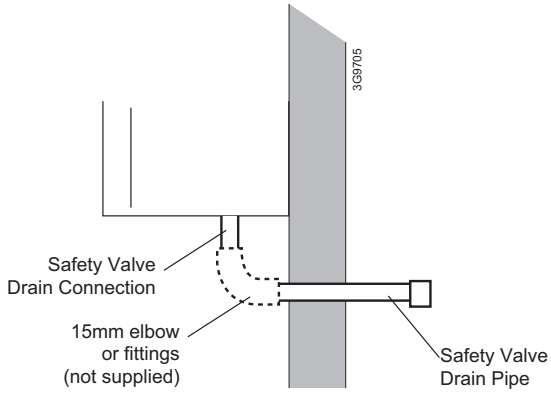

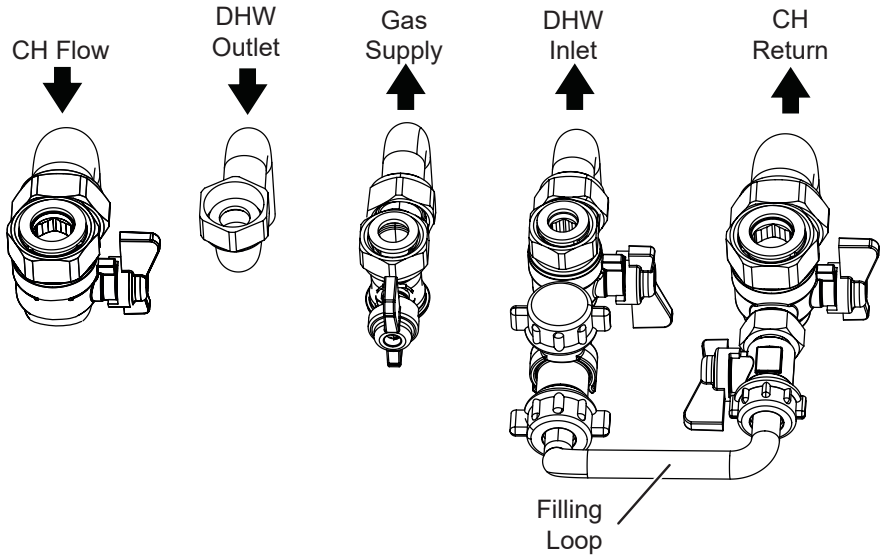

FILLING

IMPORTANT - when filling:
When filling there may be a slight water leak from the air vent therefore electrical connections should be protected.

Filling

1. Ensure filling loop is connected and all washers in place.
2. Ensure dust cap on auto air vent is slackened off refer to Section 3.24.
3. Check the following isolation handles on water connections are in the horizontal filling position (blue handle on DHW inlet A and black handle on CH return C).

***Note**. The CH flow isolation valve handle MUST be in the vertical position to enable filling.*

4. Slowly turn the filling loop handle (blue B) to the horizontal open position until the pressure gauge reads between 1 to 1.5 bar.
5. Once the pressure gauge dial reads between 1 to1.5 bar turn the filling loop handle (blue B) back to the closed (vertical) position.
6. Turn the CH Return handle (black C) and the DHW Inlet handle (blue A) to the open (vertical) position.
7. Disconnect the filling loop from the DHW Inlet valve and fit the grey cap to the open end.
8. Fit the Plug to the free end of the filling loop.

Note open all DHW taps to ensure water is flowing freely-once satisfied close all taps.

Filling Positions shown

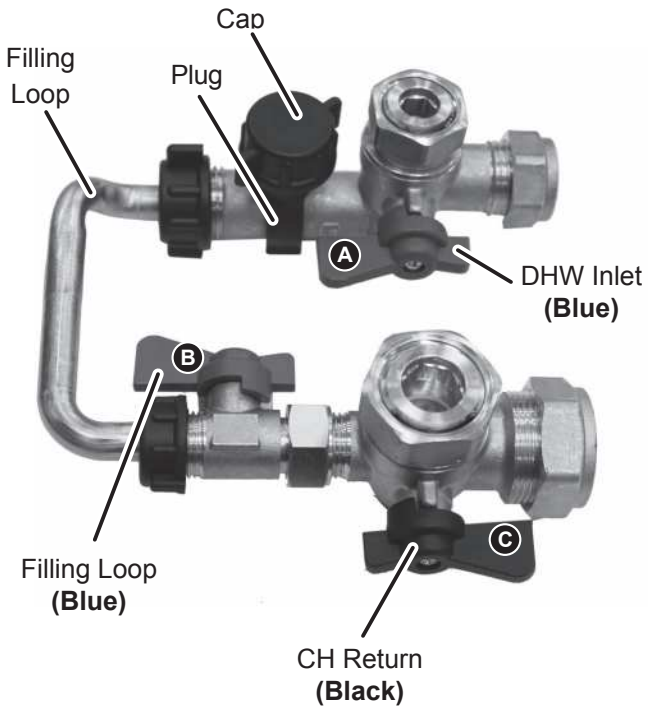

Top Up

1. Ensure filling loop is connected and all washers in place.
2. Ensure dust cap on auto air vent is slackened off refer to Section 3.24.
3. Turn the DHW Inlet handle (blue A) to the horizontal position.
4. Slowly turn the filling loop handle (blue B) to the horizontal open position until the pressure gauge reads between 1 to 1.5 bar
5. Once the pressure gauge dial reads between 1-1.5 bar turn the handle (blue B) on the filling loop back to the closed (vertical) position.
6. Turn the DHW Inlet handle (blue A) to the open (vertical) position.
7. Disconnect the filling loop from the DHW Inlet valve and fit the grey cap to the open end.
8. Fit the Plug to the free end of the filling loop.

Note open all DHW taps to ensure water is flowing freely-once satisfied close all taps.

Top Up Positions shown

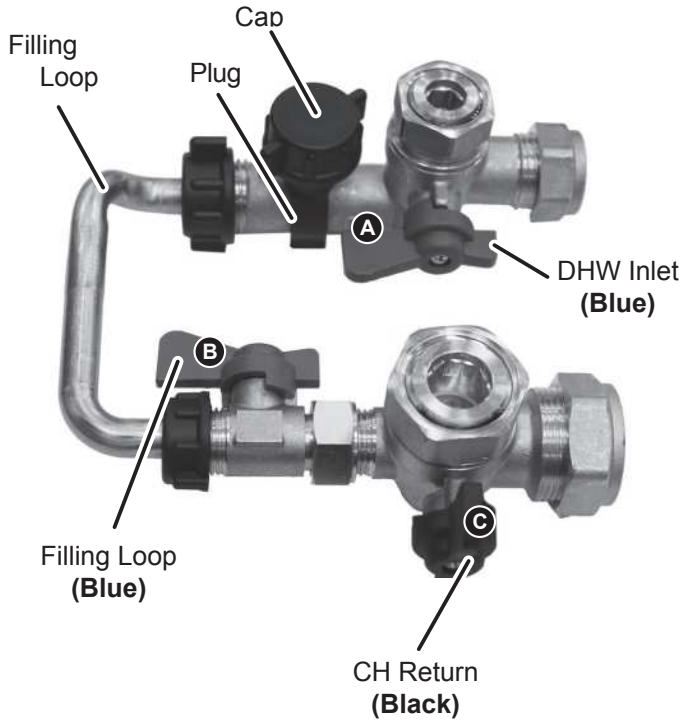

2.16 ELECTRICAL CONNECTIONS

WARNING. This appliance MUST be earthed.

A mains supply of 230Vac ~ 50 Hz is required.

The fuse rating should be 3A. All external controls and wiring must be suitable for mains voltage.

Wiring external to the boiler MUST be in accordance with the current I.E.E. (BS.7671) Wiring Regulations and any local regulations.

Wiring should be 3 core PVC insulated cable, not less than 0.75mm^2 (24 x 0.2mm), and to BS 6500 Table 16. For IE reference should be made to the current ETCI rules for electrical installations.

Connection must be made in a way that allows complete isolation of the electrical supply such as a double pole switch having a 3mm contact separation in both poles. The means of isolation must be accessible to the user after installation.

2.17 INSTALLER WIRING

The Logic boiler comes pre-fitted with 1.8m of mains cable. This must be connected to a permanent live supply and NOT switched by thermostats/programmers. If the supply cord is damaged, it must be replaced by the manufacturer, service agent or similarly qualified persons in order to avoid hazard.

Accessing the installer wiring

1. Isolate the mains supply from the boiler.
2. Remove the front panel. Refer to section 3.2.
3. Swing down the control box into the service position, unclip and swing back the installer wiring cover and latch into the retaining clips. Refer to Section 3.8.

All of the connections can now be readily accessed, the plugs can be removed to aid wiring.

Note the cable strain relief system and grommets. Once any wiring is completed, to secure the boiler, reverse the order above.

Note 1 *The link wire on the 230V installer room stat/ timer connection gives a demand in conjunction with the OpenTherm link wire (located on the right hand side of the control box).*

INSTALLER CONNECTIONS (LHS)

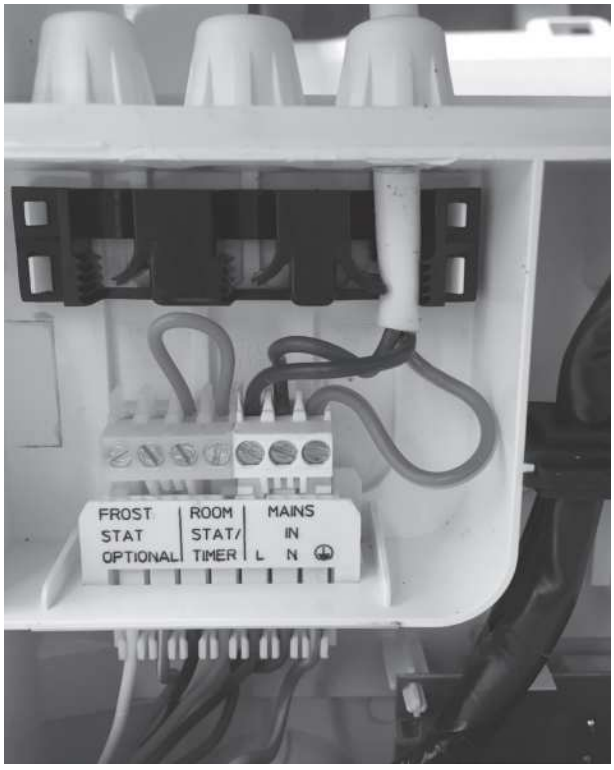

INSTALLER CONNECTIONS (RHS)

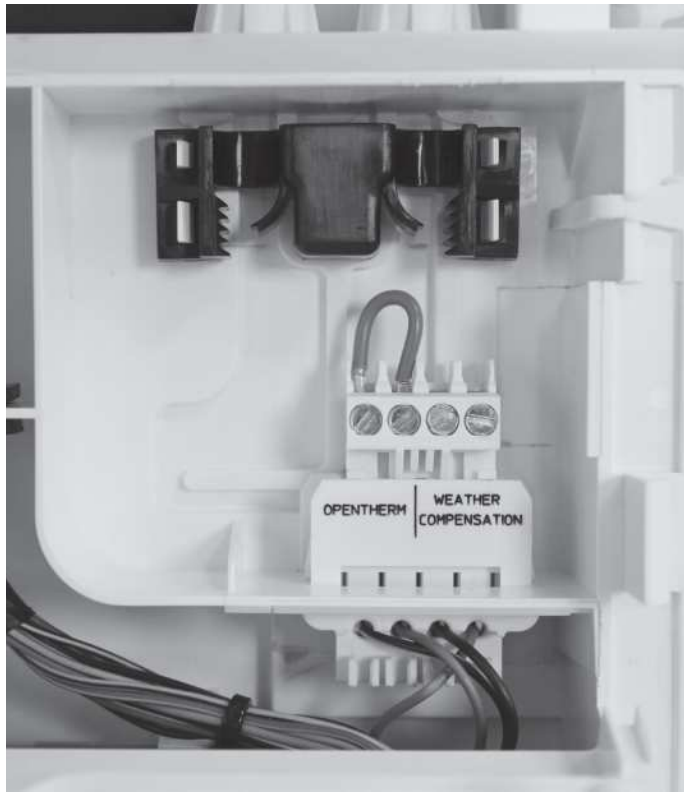

2.18 EXTERNAL WIRING

External Controls – 230V 50Hz

Wiring a 230V 50Hz Room Thermostat, Diagram A (with optional timer, Diagram B)

1. Remove the link wire from the room stat/timer plug.
2. Connect the external cable from the room stat/timer across these two connections, if a general live connection is used for the room stat or timer then connect this to the fused spur, on the load side (see Diagram C)
3. If the room thermostat has compensation and requires a neutral connection, make this connection to the fused spur, on the load side.

Optional External Controls – Extra Low Voltage

Wiring OpenTherm Room Control or other OpenTherm Master Device, Diagram D.

1. Locate the OpenTherm connection on the right hand side of the boiler installer connections area, remove the violet link wire and connect the 2 core cable from the OpenTherm device.

Frost Protection

If parts of the pipework run outside the house or if the boiler will be left off for more than a day or so then a frost thermostat should be wired into the system.

This is usually done at the programmer, in which case the programmer selector switches are set to OFF and all the other controls MUST be left in the running position.

The frost thermostat should be sited in a cold place but where it can sense heat from the system.

Wiring a system frost thermostat, see digarams A, B and C. Wire the frost thermostat across the two connections as shown.

Note. *If the boiler is installed in a garage it may be necessary to fit a pipe thermostat, preferably on the return pipework.*

DIAGRAM A:
Programmable Room Stat or Room Stat with Internal Timer

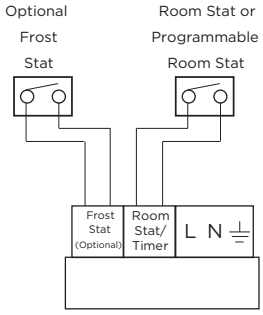

DIAGRAM B:
Room Stat with External Timer

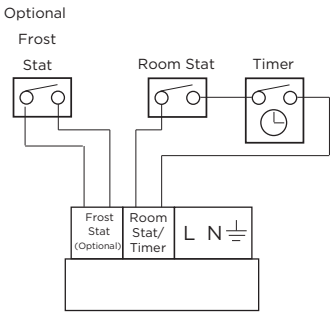

DIAGRAM C:
Use of General Live for Room Stat

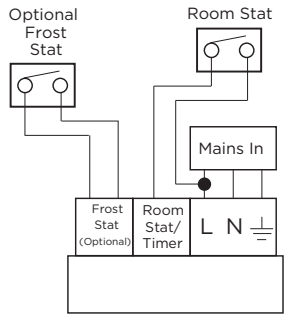

DIAGRAM D:
OpenTherm Device

DO NOT CONNECT 230V TO THESE TERMINALS OR THE BOILER ELECTRONICS WILL BE DAMAGED

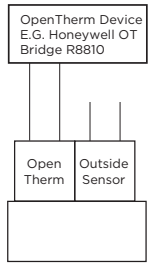

2.19 REPLACING PRE-FITTED MAINS CABLE

If it is necessary to use an alternative mains cable to the one pre-fitted then use the following guide.

Replacement wiring should comply with notes in Section 2.18 and be carried out by a qualified person to avoid a hazard.

1. Isolate the mains supply to the boiler.
2. Remove the front panel. Refer to Section 3.2.
3. Swing the control box down into the service position, unclip and swing back the installer wiring cover to latch into the retaining clips. Refer to Section 3.8.
4. Unplug the mains connector and release the cable from strain relief.
5. Unscrew the L N & E connections & remove wires from connector.
6. Remove the mains cable by pulling back through the grommet .
7. Route the replacement through the grommet and re-fit in reverse order.
8. Close the installer wiring cover ensuring that it is located correctly and that the cable is retained into the strain relief as shown.
9. Swing the control box back up into the operating position and re-fit the front panel ensuring a good seal is made.

NOTE. *When making the mains electrical connections to the boiler it is important that the wires are prepared in such a way that the earth conductor is longer than the current carrying conductors, such that if the cord anchorage should slip, the current carrying conductors become taut before the earthing conductor.*

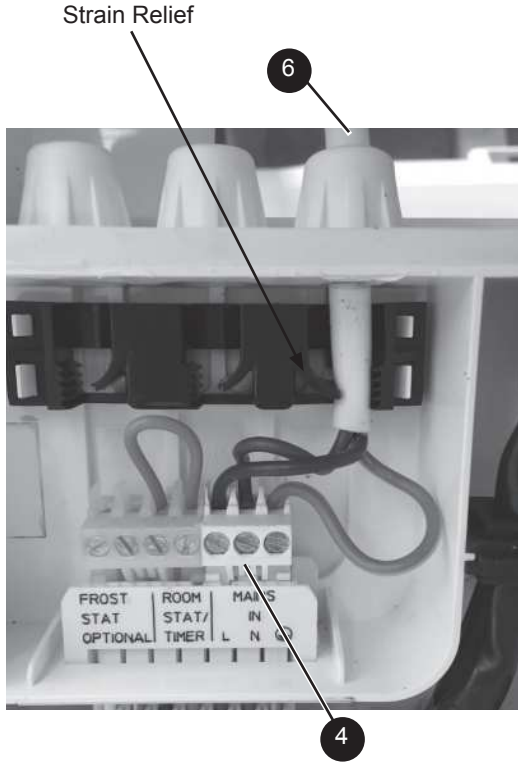

2.20 CH OPERATION

The On and Off time control of central heating should be controlled by a separate timer.

During programmed On times the Central Heating Radiator Flow Temperature is controlled by the boiler relative to the Outside Temperature as shown in the diagram.

The Room temperature can be adjusted using the Central Heating Temperature Control Knob on the boiler as follows. Essentially rotating the knob clockwise increases the room temperature and rotating the knob anti-clockwise decreases the room temperature.

The Room Temperature Setpoint in the associated graph is not directly related to the Actual Room Temperature but is the Desirable Room Temperature during a programmed CH period.

This can be adjusted between 5 and 30 degrees by the CH Potentiometer Knob on the Boiler when the Outside Temperature Sensor is connected. The graph only shows temperatures between 12 and 30 degrees for clarity.

Examples:

1. If the CH Potentiometer Knob is set to display 22ºC on the Boiler Display the Room Temperature Setpoint will be 22ºC and the curve 22 will be followed, indicated by 11th curve in from the left hand side. So as the outside temperature varies the Flow Setpoint to the CH circuit will increase and decrease proportionally.
2. If the CH Potentiometer Knob is rotated fully clockwise, the Boiler Display will read 30ºC and the Room Temperature Setpoint will be 30ºC hence the curve 30 will be followed.
3. If the CH Potentiometer Knob is rotated fully anticlockwise, the Boiler Display will read 5ºC and the Room Temperature Setpoint will be 5ºC. This is an unrealistic Room Temperature Setpoint for a CH period during an ON time, but it is calculated internally for managing Frost Protection for the system based upon Outside Temperature.

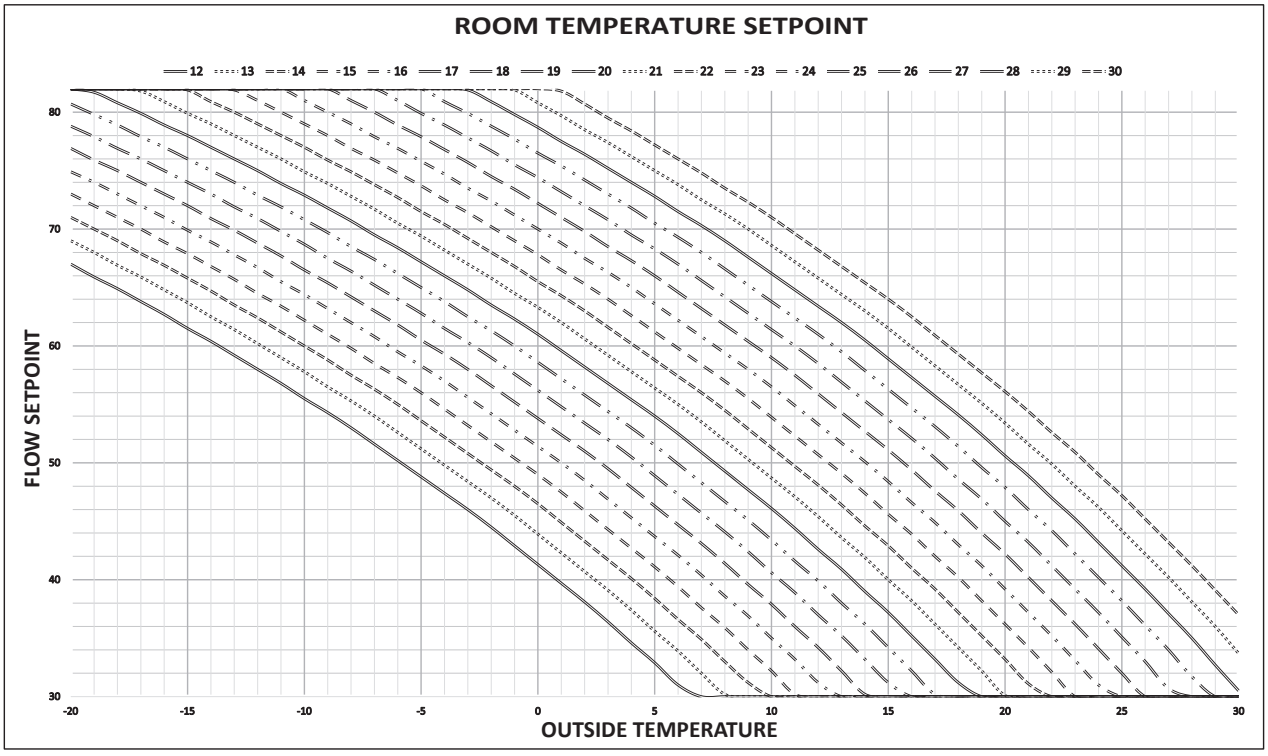

2.21 THE WEATHER COMPENSATION KIT - SUPPLIED AS STANDARD

This kit provides the facility to apply outside air temperature control to the boiler water flow temperature which provides energy savings. The outside sensor provided measures outside air temperature and sends a signal to the boiler, which adjusts the maximum boiler flow temperature in response. If outside air temperature is greater than the system design temperature, the boiler flow temperature is reduced providing running cost savings. The boiler will operate in the condensing mode more frequently increasing savings.

Once the sensor is fitted it is automatically detected.

The sensor operation may be configured by adjustment of the boiler operating parameters, if necessary.

Kit Contents

A. Outside Air Sensor

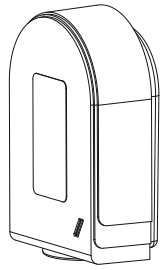

FITTING THE KIT

Note. A timer should be fitted to the system so that CH will be switched off when appropriate.

Fitting the sensor

The air sensor should be located on an external wall of the building to be heated. Fix the sensor to a north/north-east facing wall to avoid direct radiation from the sun. The air sensor should be located to avoid any heating effect from the boiler flue.

To fix the air sensor to the wall, unscrew the sensor box plastic cover and screw/plug the sensor body to the wall.

Wire a twin core 0.5mm^2 cable from the sensor to the boiler through an RH grommet located on the underside of the boiler. Cable length between sensor and boiler should be no greater than 20m. Note that this connection is safety extra low voltage. It is not necessary for the person carrying out the wiring to be approved to Part P of the Building Regulations.

Avoid running this cable alongside mains voltage cables.

Wiring the Weather Compensation Kit to the Keston Combi.

1. Isolate the electricity supply to the boiler.
2. Remove the boiler front panel (refer to boiler installation instructions).
3. Swing the control box down into the service position, unclip and swing back the installer wiring cover to latch into the retaining clips. Refer to Section 3.8.
4. Connect the sensor wiring into the RHS of the 4 way terminal block and secure with the strain relief .
5. Re-assemble in reverse order.

Note. *If fitting this with the boiler, then plese complete product Fische system label, adding % efficiency. This is a Class II Control (2%).*

INSTALLER CONNECTIONS (RHS)

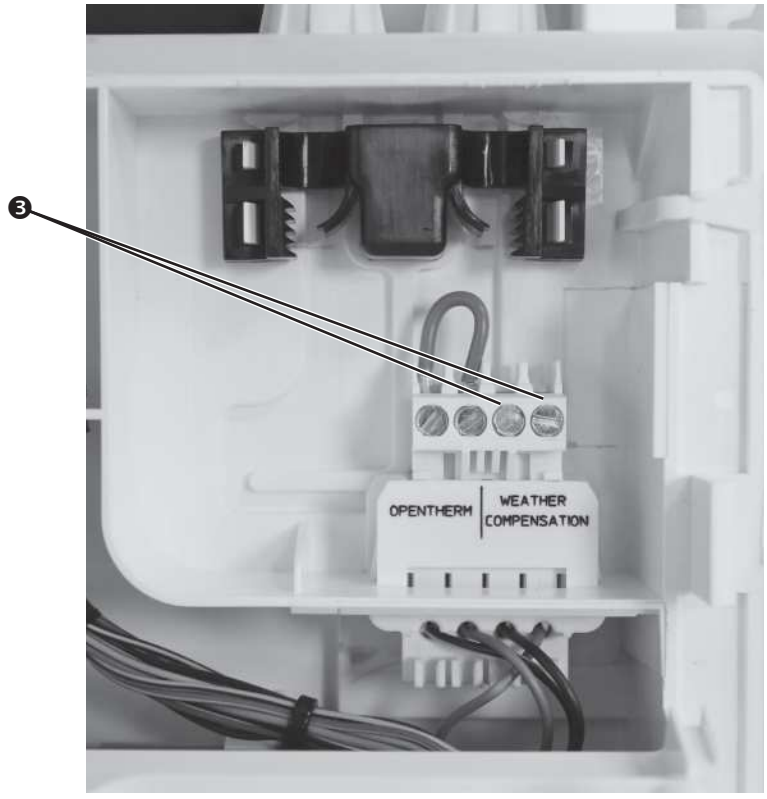

2.22 WIRING DIAGRAM

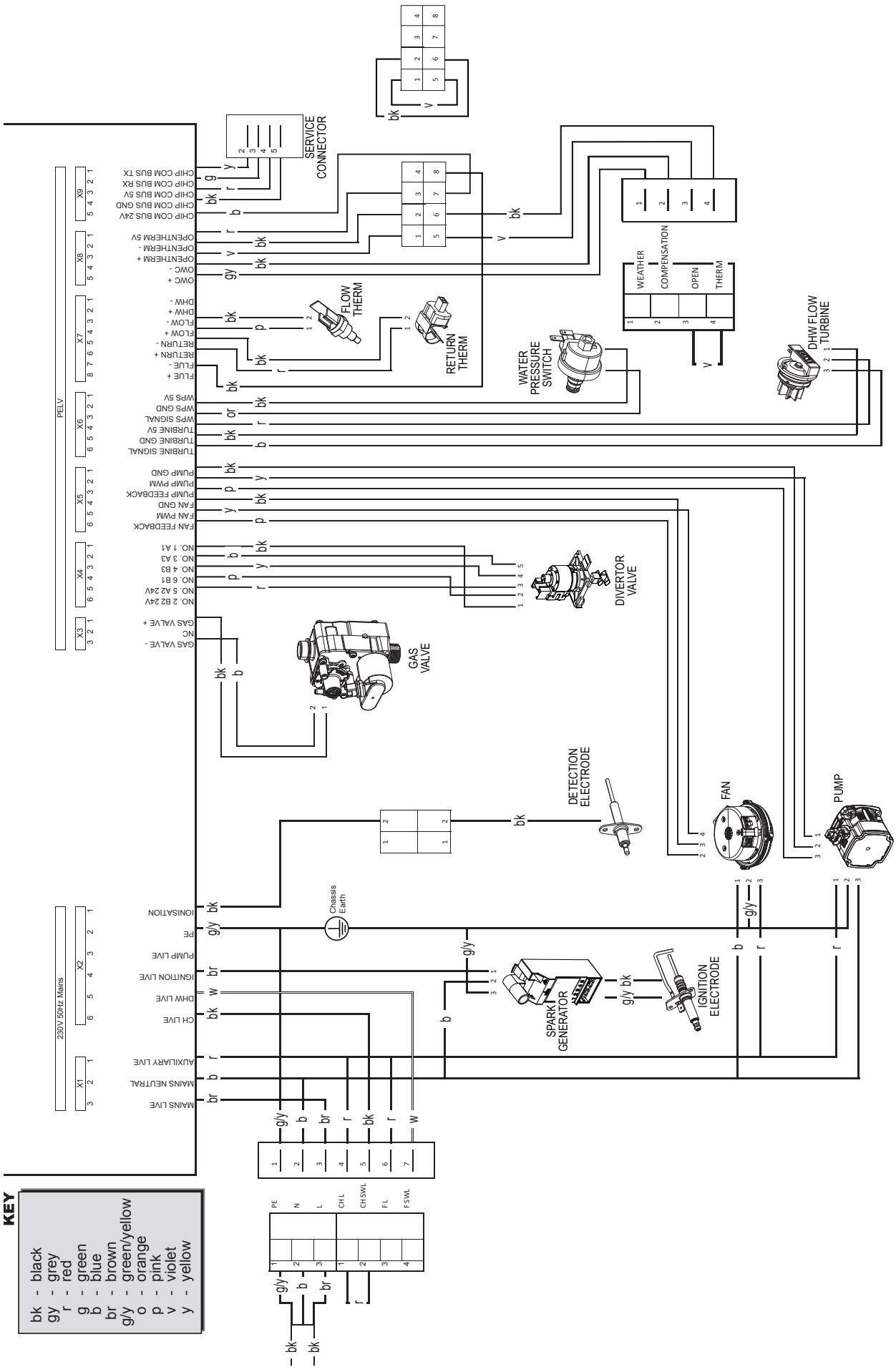

2.23 COMMISSIONING AND TESTING

A. Electrical Installation

1. Checks to ensure electrical safety should be carried out by a competent person.
2. ALWAYS carry out the preliminary electrical system checks, i.e. earth continuity, polarity, resistance to earth and short circuit, using a suitable test meter.

B. Gas Installation

1. The whole of the gas installation, including the meter, should be inspected and tested for tightness and purged in accordance with the recommendations of BS.6891. In IE refer to IS.813.
2. Purge air from the gas installation by the approved methods only.

WARNING. **Whilst effecting the required gas tightness test and purging air from the gas installation, open all windows and doors, extinguish naked lights and *DO NOT SMOKE.***

GENERAL

Please Note: The combustion for this appliance has been checked, adjusted and preset at the factory for operation on the gas type defined on the appliance data plate. **DO NOT** adjust the air/gas ratio valve.

Having checked:

- That the boiler has been installed in accordance with these instructions.
- The integrity of the flue system and the flue seals, as described in the Flue Installation section.

Proceed to put the boiler into operation as follows:

CHECK THE OPERATIONAL (WORKING) GAS INLET PRESSURE

Set up the boiler to operate at maximum rate by opening hot tap to maximum flow.

With the boiler operating in the maximum rate condition check that the operational (working) gas pressure at the inlet gas pressure test point complies with the requirements - refer to “Gas Supply” on page 12.

Ensure that this inlet pressure can be obtained with all other gas appliances in the property working.

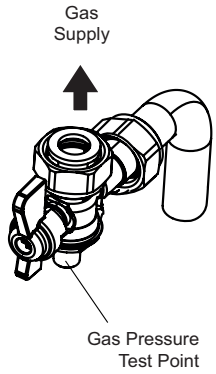

“SERVICE REQUIRED” Function

When the boiler has been installed for more than 1 year the following screen will appear:

To cancel this message press “RESTART”.

“AIR VENTING” Function

Refer to page 38.

As part of the commissioning process, the combustion of this appliance must be checked and the Benchmark Checklist completed. A flow chart to assist is provided on page 73.

ATTENTION !

IT IS A CONDITION OF THE MANUFACTURER’S WARRANTY THAT THE BENCHMARK COMMISSIONING CHECKLIST IS FULLY COMPLETED AND LEFT WITH THE APPLIANCE

2.24 INITIAL LIGHTING

Legend

A. Domestic Hot Water Temperature Knob
B. Central Heating Temperature Knob
C. Mode Knob
D. Boiler Status Display
E. Burner 'on' Indicator
F. Central Heating Economy Setting
G. CH Flow Isolating Valve
H. Gas Inlet Pressure Test Point
I. Gas Service Cock
J. DHW Inlet Valve
K. CH Return Isolating Valve
L. DHW Outlet
M. Filling Loop Valve
N. Pressure Gauge

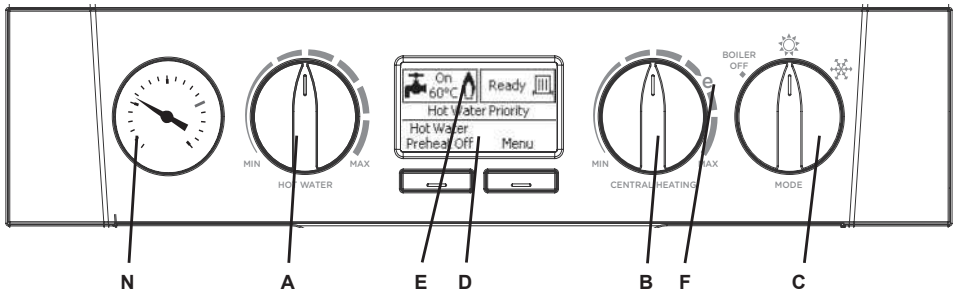

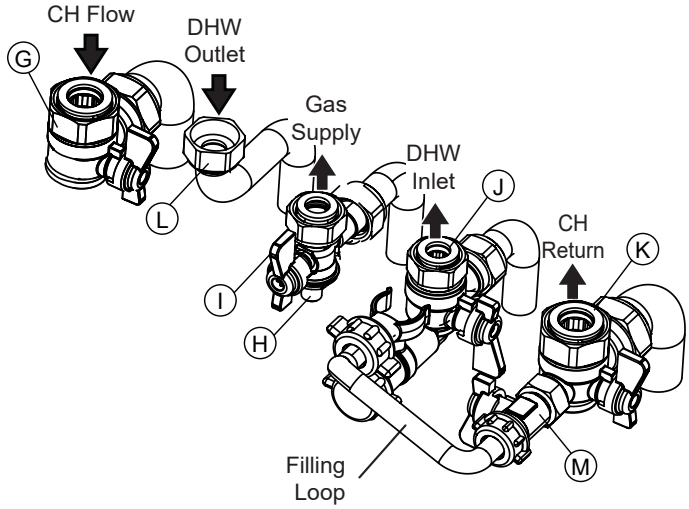

1. Check that the system has been filled and that the boiler is not airlocked. Ensure the automatic air vent cap is open.

Note.
It is important the burner is not operated before the system is fully vented of air. Refer to Vent System section page 38. If it is necessary to operate the appliance pump to assist venting of the air this must be done with the gas service cock turned off.

2. Refit the boiler front panel. Refer to Section 3.2.
3. Check that the drain cock is closed and that the CH and DHW isolating valves (G,K & J) are OPEN.
4. Check that the electrical supply is OFF.
5. Check that the boiler mode knob (C) is OFF.
6. Check that the gas service cock (I) is OPEN.
7. Slacken the screw in the inlet pressure test point (H) and connect a gas pressure gauge via a flexible tube.
8. Switch the electricity supply ON and check all external controls are calling for heat.

CENTRAL HEATING

9. Set the CH temp control (B) to max and turn the mode knob (C) to '', The boiler control should now go through its ignition sequence until the burner is established.
10. If the boiler does not light then after 5 attempts the boiler will lock out and display "Ignition Lockout".

    Restart the boiler (Refer to Section 2.27). The boiler will repeat its ignition sequence. If restart occurs 5 times within 15 minutes then "Too Many Restarts" will be shown.

    When the burner is established a screen similar to the following will be shown.

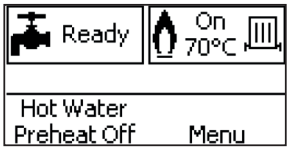

DOMESTIC HOT WATER

11. With the boiler firing, set the DHW Temp Knob (A) to maximum and fully open a DHW tap.

    The boiler should continue to run and the display should change from showing

12. Ensure that with the boiler operating the dynamic gas pressure is able to obtain maximum output. Refer to Table 2.

IMPORTANT

The gas input to the burner is regulated by the gas valve according to the air flow produced by the fan. It is NOT user-adjustable. Any interference to sealed settings on the gas valve will adversely affect operation and render our warranty void.

For additional gas supply information refer to "Gas Supply" on page 12.

13. Turn off the DHW tap.
14. Remove gas pressure guage, tighten inlet pressure test point and check for gas tightness.

2.25 THE DISPLAY

The user control has a dot matrix LCD to inform the user about the status of the boiler.

Notes: *Boiler frost protection - boiler fires if temperature is below 5° C.*

The temperatures shown below are for illustration purposes only. The measured temperatures will be shown on the boiler.

Display Functions - Normal Operation

Mode Knob in “BOILER OFF” position:

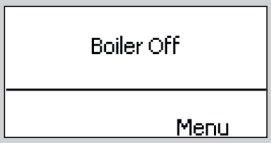

Mode knob in “” position and no heat demand:

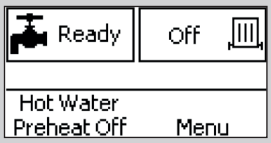

Mode knob in “” and no heat demand:

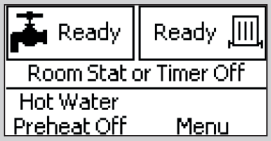

Domestic hot water operation without call for CH:

Domestic hot water operation with call for CH:

Central Heating Operaton:

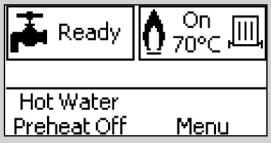

Preheat operation:

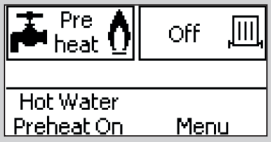

Boiler frost protection:

Service required:

Display Functions - Settings Changed

DHW temperature knob moved:

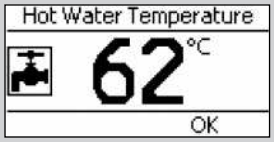

CH temperature knob moved:

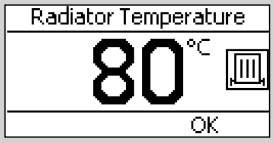

CH temperature knob moved with outside sensor connected:

Pre-Heat

If preheat is switched on, then the boiler will periodically fire the burner. Thereby reducing the time taken to provide hot water. If preheat is switched off the response time will be reduced, although gas consumption will also be reduced.

To switch preheat on press the “Hot Water Preheat Off” button:

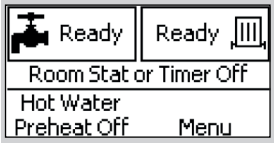

To switch preheat off press the “Hot Water Preheat On” button:

MENU OPERATIONS

Efficiency Level

To view the efficiency level of the boiler press “Menu” and the following screen will be displayed:

```
MENU
→ Super Efficiency Level ←
Service Phone Number
Next        Enter
```

Press Enter and a screen similar to the following will be displayed:

```
Super Efficiency Level
Min                Max
85%
Exit
```

Press “Exit” to return to normal operation.

Service Phone Number

The service required message which is displayed after 12 months can be customised to show the installer’s telephone number. To record your telephone number press “Menu” and the following screen will be displayed:

```
MENU
→ Super Efficiency Level ←
Service Phone Number
Next        Enter
```

Press “Next” and the following screen will be displayed:

```
MENU
Super Efficiency Level
→ Service Phone Number ←
Change Service Time
Next        Enter
```

Press “Enter” and the following screen will be displayed:

```
Service Phone Number
01482498660__
(Shown if Service due)
Next        Change
```

Press “Change” to change the number and “Next” to accept.

Press “Exit” to return to nomral operation.

Change Service Time

The time until the next service required message is shown can be changed as follows

```
MENU
→ Super Efficiency Level ←
Service Phone Number
Next        Enter
```

Press “Next” until the following screen will be displayed:

```
MENU
Service Phone Number
→ Change Service Time ←
Fault History
Next        Enter
```

Press “Enter” and the following screen will be displayed:

```
Change Service Time
Service Due in [12 Months]
Exit        Change
```

Press “Change” to change the time.

Press “Exit” to return to normal operation.

Fault History

To view the Fault History of the boiler press “Menu” and the following screen will be displayed:

```
MENU
→ Super Efficiency Level ←
Service Phone Number
Next        Enter
```

Press “Next” until the following screen is displayed:

```
MENU
Change Service Time
→ Fault History ←
Fault Help
Next        Enter
```

Press “Enter” and a screen similar to the following will be displayed:

```
Fault History
Low Water Pressure
Total: 34
Most Recent: 25 days ago
Exit        More
```

Press “More” to see more faults.

Press “Exit” to return to normal operation.

Fault Help

This feature provides a list of potential corrective actions at an installer level for all faults detectable by the boiler electronics. Press “Menu” and the following screen will be displayed:

```
MENU
→ Super Efficiency Level ←
Service Phone Number
Next        Enter
```

Press “Next” until the following screen is displayed:

```
MENU
Fault History
→ Fault Help ←
Vent System
Next        Enter
```

Press “Enter” and the following screen will be displayed.

```
Fault Help
Ideal Technical Help Line:
01482498663
Spares: 01482498665
Exit        More
```

Press “More” for help information.

Press “Exit” to return to normal operation.

Vent System

The Vent System feature aids removal of air from the heat exchanger. The pump will be switched on for 50s and then off for 10s while the diverter valve is moved between DHW and CH every 30s. This feature lasts for 5 mins.

Press “Menu” and the following screen will be displayed:

```
MENU
→ Super Efficiency Level ←
Service Phone Number
Next        Enter
```

Press “Next” until the following screen is displayed:

```
MENU
Fault Help
→ Vent System ←
Sensor Readings
Next        Enter
```

Press “Enter” and the following screen will be displayed:

```
Vent System
Pump On 50s/Off 10s
2 way Valve 30s CH/DHW
Time Left: 5min
Exit
```

This feature will end automatically after 5 mins. To end manually press “Exit”.

MENU OPERATIONS

Sensor Readings

To view the current Water Pressure, Switched Live Status, DHW Flow Rate, DHW Temperature, Flow Temperature, Return Temperature, Flame Status, Outside Temperature, DHW switch Live Status, and OpenTherm Status, press “Menu” and the following screen will be displayed:

```
MENU
→ Super Efficiency Level ←
Service Phone Number
Next        Enter
```

Press “Next” until the following screen is displayed.

```
MENU
Vent System
→ Sensor Readings ←
Pump/Fan/Valves...
Next        Enter
```

Press “Enter” and a screen similar to the following will be displayed:

```
Sensor Readings
Water Pressure: On
CH Switched Live: Off
DHW Flow Rate: 12L/min
Exit        More
```

Press “More” to see the full list.

Press “Exit” to return to normal operation.

Pump / Fan / Valves

To view the current status of the pump, diverter valve, fan and gas valve press “Menu” and the following screen will be displayed:

```
MENU
→ Super Efficiency Level ←
Service Phone Number
Next        Enter
```

Press “Next” until the following screen is displayed:

```
MENU
Sensor Readings
→ Pump/Fan/Valves... ←
Max' Flow Temperature
Next        Enter
```

Press “Enter” and a screen similar to the following will be displayed:

```
Pump/Fan/Valves...
Diverter Valve: DHW
        Pump: On at 100%
Fan (set 35 ): 35%
Exit        More
```

Press “More” to view the full list.

Press “Exit” to return to normal operation.

Maximum Flow Temperature

It is possible to limit the maximum flow temperature that can be set from the CH flow temperature knob using this feature. Note that this could prevent adequate room temperature being achieved in winter. Press “Menu” and the following screen will be displayed:

```
MENU
→ Super Efficiency Level ←
Service Phone Number
Next        Enter
```

Press “Next” until the following screen is displayed.

```
MENU
Pump/Fan/Valves...
→ Max' Flow Temperature ←
Minimum Rate
Next        Enter
```

Press “Enter” and a screen similar to the following will be displayed:

```
Max' Flow Temperature
80 °C
Exit        Change
```

Press “Change” until the desired temperature is displayed

Press “Exit” to return to normal operation.

Service Mode Minimum Rate

This feature will run the burner at minimum rate. Note that a CH demand has to already be present for this feature to be active. To activate the feature press “Menu” and the folloiwng screen will be displayed.

```
MENU
→ Super Efficiency Level ←
Service Phone Number
Next        Enter
```

Press “Next” until the following screen is displayed.

```
MENU
Max' Flow Temperature
→ Minimum Rate ←
Maximum DHW Rate
Next        Enter
```

Press “Enter” and a screen similar to the following screen will be displayed.

```
Minimum Rate
Fan Target: 25%
Fan Actual: 25%
Time Left: 10mins
Exit
```

Press “Exit” to return to normal operation.

Service Mode Maximum DHW Rate

This feature will run the burner at maximum DHW rate. Note that a CH demand has to already be present for this feature to be active. To activate the feature press “Menu” and the folloiwng screen will be displayed.

```
MENU
→ Super Efficiency Level ←
Service Phone Number
Next        Enter
```

Press “Next” until the following screen is displayed.

```
MENU
Minimum Rate
→ Maximum DHW Rate ←
Maximum CH Rate
Next        Enter
```

Press “Enter” and a screen similar to the following screen will be displayed.

```
Maximum DHW Rate
Fan Target: 100%
Fan Actual: 100%
Time Left: 10mins
Exit
```

Press “Exit” to return to normal operation.

Service Mode Maximum CH Rate

This feature will run the burner at maximum CH rate. Note that a CH demand has to already be present for this feature to be active. To activate the feature press “Menu” and the folloiwng screen will be displayed.

```
MENU
→ Super Efficiency Level ←
Service Phone Number
Next        Enter
```

Press “Next” until the following screen is displayed.

```
MENU
Minimum Rate
→ Maximum DHW Rate ←
Maximum CH Rate
Next        Enter
```

Press “Enter” and a screen similar to the following screen will be displayed.

```
Maximum DHW Rate
Fan Target: 100%
Fan Actual: 100%
Time Left: 10mins
Exit
```

Press “Exit” to return to normal operation.

MENU OPERATIONS

Pump Modulation

The boiler is factory set for 70% minimum CH pump speed. This can be increased to 100%. Press “Enter” and the following screen will be displayed:

```
MENU
→ Super Efficiency Level ←
  Service Phone Number
Next          Enter
```

Press “next” until the following screen is displayed:

```
MENU
  Maximum CH Rate
→ Pump Modulation ←
  Outside Sensor Slope
Next          Enter
```

Press “Enter” and the following screen will be displayed:

```
Pump Modulation
  [On]
(CH Minimum = 70%)
Exit          Change
```

Press “Change” to change the setting.

Press “Exit to return to normal operation.

Diverter Valve Mid Position

To move the diverter valve to the mid position, ensure there are no demands for heat and press “Menu”. The following screen will be displayed:

```
MENU
→ Super Efficiency Level ←
  Service Phone Number
Next          Enter
```

Press “next” until the following screen is displayed:

```
MENU
  Outside Sensor Slope
→ Diverter Valve Mid Position ←
Exit          Enter
```

Press “Enter” and the diverter valve will move to mid position and the following screen will be displayed:

```
Diverter Valve Mid Position

Exit
```

Press “Exit to return to normal operation.

Outside Sensor Slope

This feature is only accessible if an outside sensor has been fitted to the boiler. Boiler performance can be adjusted relative to the insulation level of the building. To change the slope press “Menu” and the following screen will be displayed:

```
MENU
→ Super Efficiency Level ←
  Service Phone Number
Next          Enter
```

Press “Next” until the following screen is displayed:

```
MENU
  Pump Modulation
→ Outside Sensor Slope ←
Exit          Enter
```

Press “Enter” and the following screen will be displayed.

```
Outside Sensor Slope
  [1.6]
Exit          Change
```

Press “Change” until the desired setting is displayed.

Note. The slope is active for settings between 5 and 40. Default is 17.

Press “Exit” to return to normal operation.

2.26 GENERAL CHECKS

Make the following checks for correct operation in:

1. Fully open all DHW taps in turn and ensure that water flows freely from them.

   The display should show:

2. Close all taps except the furthest one from the boiler and check that the boiler is firing at maximum rate. This is factory set to give a DHW temperature rise of approximately 35°C at the flow rate stated on page 10 under "operation".
3. Reduce the DHW draw-off rate to about 3 l/min (0.7gpm) and check that the boiler modulates to deliver DHW at approximately 65°C.
4. Close the DHW tap and check that the main burner extinguishes. The pump should overrun for 60 seconds.

   When the pump stops the display sequence should read:

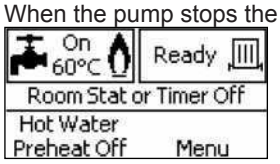

Note. *On systems in excess of 2 bar inlet pressure a water pressure governor may be required to prevent water noise.*

CENTRAL HEATING & DOMESTIC HOT WATER MODE.

1. Ensure that the CH external controls are calling for heat.

   The display should show:

2. Fully open a DHW tap and check that hot water is delivered.

   The display should show:

3. **Gas Rate**

   Check the boiler gas rate when the boiler is at full DHW output.

   Check at the gas meter, with no other appliance in use. Refer to Tables 2 & 3 for gas rates.
4. Close the DHW tap.
5. Set the central heating external controls to OFF. The burner should go off and the pump continue to run for two minutes.

   The display should read:

6. Check the correct operation of the timer (if fitted) and all other system controls. Operate each control separately and *Note. The temperature displayed "XX°C" is that measured at that moment, not the set temperature.*

WATER CIRCULATION SYSTEM

1. With the system COLD, check that the initial pressure is correct to the system design requirements.

   For pre-pressurised systems, this should be 1.0 bar.
2. With the system HOT, examine all water connections for soundness. The system pressure will increase with temperature rise but should not exceed 2.5 bar.
3. With the system still hot, turn off the gas, water and electricity supplies to the boiler and drain down to complete the flushing process.

Note: *A flushing solution should be used during the flushing procedure. Flushing solutions: Fernox Superfloc, Sentinel X300 (new systems) or X400 (existing systems). Refer to Section 1.16.*

4. Refill and vent the system, add inhibitor (see Frame 5), clear all air locks and again check for water soundness.
5. Restart the system initial pressure to the design requirement.
6. Balance the system. Refer to Section 1.15.
7. Check the condensate drain for leaks and check that it is discharging correctly.
8. Finally, set the controls to the User's requirements.

Notes.

1. *If the pump has not operated in the last 24 hours it will run briefly to prevent seizure*
2. *If the diverter valve has not operated in the last 24 hours it will be operated briefly to prevent seizure. These two operations will not occur at the same time.*

WATER TEMPERATURES

Temperatures can be selected using the CH and DHW thermostats.

Knob Setting	CH Flow Temp °C	DHW Outlet Temp °C
Max	80	65
Min	30	40

Due to system variations and seasonal temperature fluctuations DHW flow rates/temperature rise will vary, requiring adjustment at the draw off tap : the lower the rate the higher the temperature, and vice versa.

2.27 RESTART PROCEDURE

To restart the boiler, press the RESTART button (H).

Legend

A. Domestic Hot Water Temperature Knob
B. Central Heating Temperature Knob
C. Mode Knob
D. Boiler Status Display
E. Burner 'on' Indicator
F. Central Heating Economy Setting
G. Pressure Gauge
H Restart Button

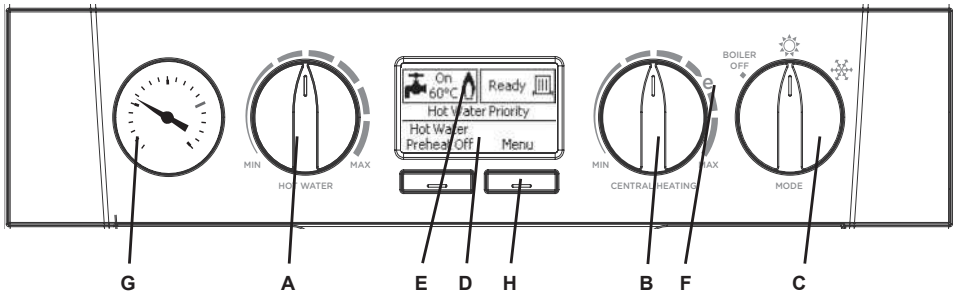

2.28 HANDING OVER

After completing the installation and commissioning of the system the installer should hand over to the householder by the following actions:

1. Make the householder aware that the user instructions are located in the pocket in the drop down door and explain his/her responsibilities under the relevant national regulations.
2. Explain and demonstrate the lighting and shutting down procedures.
3. The operation of the boiler and the use and adjustment of all system controls should be fully explained to the householder, to ensure the greatest possible fuel economy consistent with the household requirements of both heating and hot water consumption.

   Advise the User of the precautions necessary to prevent damage to the system and to the building, in the event of the system remaining inoperative during frosty conditions.
4. Explain the function and the use of the boiler heating and domestic hot water controls.

   Explain that due to system variations and seasonal temperature fluctuations DHW flow rates/temperature rise will vary, requiring adjustment at the draw off tap. It is therefore necessary to draw the users attention to the section in the Users Instructions titled "Control of Water Temperature" and the following statement:

   "Additionally, the temperature can be controlled by the user via the draw-off tap: the lower the rate the higher the temperature, and vice versa".
5. Explain the function of the boiler fault mode.
6. Explain and demonstrate the function of time and temperature controls, radiator valves etc., for the economic use of the system.
7. If a timer is fitted draw attention to the timer Users Instructions and hand them to the householder.
8. Loss of system water pressure

   Explain that the dial on the boiler indicates the central heating system pressure and that if the normal COLD pressure of the system is seen to decrease over a period of time then a water leak is indicated. Explain the re-pressurising procedure and if unable to re-pressurise or if the pressure continues to drop a registered local heating installer should be consulted.
9. Explain boiler restart procedure (refer to Section 2.27).
10. After installation and commissioning please complete the benchmark Commissioning Checklist before handover to the customer. For IE, its is necessary to complete a "Declaration of Conformity" to indicate compliance to I.S. 813:2002.

IMPORTANT

11. A comprehensive service should be carried out ANNUALLY.

    Stress the importance of regular servicing by a Gas Safe Registered Engineer. In IE servicing work must be carried out by a Registered Gas Installer (RGII).
12. Inform the householder of the guarantee form and the requirement to register it to receive the full benefit of the warranty.

3.1 SERVICING SCHEDULE

For the very latest copy of literature for specification & maintenance practices, visit our website www.keston.co.uk, where you will be able to download the relevant information.

WARNING. **Always turn OFF the gas supply at the gas service cock, and switch OFF and disconnect the electricity supply to the appliance before servicing.**

Combustion testing must be carried out by a competent person using a combustion analyser conforming to BS7927.

To ensure the continued safe and efficient operation of the appliance it is recommended that it is checked at regular intervals and serviced as necessary. The frequency of servicing will depend upon the installation condition and usage but should be carried out at least annually.

It is the law that any service work must be carried out by a Gas Safe Registered Engineer. In IE service work must be carried out by a Registered Gas Installer (RGII).

Note. In order to carry out either servicing or replacement of components the boiler front panel must be removed. Refer to Section 3.2.

PRELIMINARY INSPECTION

1. Light the boiler and carry out a pre-service check, noting any operational faults (refer to appropriate fault finding chart as necessary).
2. Check the flue terminal (and terminal guard if fitted) is undamaged and clear of any obstruction.
3. Check combustion by connecting the flue gas analyser to the flue gas sampling point as shown in the diagram and measure CO and CO_2 at maximum rate. To set the boiler to Maximum and Minimum heat inputs see page 39. Repeat at minimum rate.

   If the CO / CO_2 ratio is greater than 0.004 please proceed to “Cleaning Procedure”.

   If the CO / CO_2 ratio is less than 0.004 please proceed to “Check Procedure”.

CHECK PROCEDURE

1. Check all water and gas joints for signs of leakage. Remake any suspect joints ensuring a gas tightness check is carried out if applicable and the water system is correctly refilled, vented and re-pressurised.
2. Proceed to “IMPORTANT”.

CLEANING PROCEDURE

1. Clean the main burner. Refer to Section 3.4.
2. Clean the heat exchanger & condensate trap/siphon. Refer to Section 3.5 & 3.6.
3. Check the main injector for blockage or damage. Refer to Section 3.3.

ALSO IF THE DHW FLOW RATE IS IN QUESTION:

4. Check the DHW filter for blockage.
5. The cleaning procedures are covered more fully in Sections 3.3 - 3.7 and MUST be carried out in sequence.
6. Proceed to “IMPORTANT”.

Do not operate the boiler if the front panel is not fitted.

IMPORTANT

1. If, for any reason, the condensate trap/siphon has been removed, ensure the trap is refilled with water before re-assembling.
2. After completing the servicing or exchange of components always ensure all gas valve connections are gas tight with a gas soundness check up to the gas control valve.
3. When work is complete the front panel MUST be correctly refitted, ensuring that a good seal is made.
4. Complete the service section in the Benchmark Commissioning Checklist.

GENERAL

Please Note: During routine servicing, and after any maintenance or change of part of the combustion circuit, the following must be checked:

- The integrity of the flue system and the flue seals,
- The integrity of the boiler combustion circuit and the relevant seals
- The operational (working) gas inlet pressure at maximum rate.
- The gas rate
- The combustion performance.

COMPETENCE TO CARRY OUT THE CHECK OF COMBUSTION PERFORMANCE

Please Note: BS 6798:2009 Specification for installation and maintenance of gas-fired boilers of rated input not exceeding 70kW net advises that:

- The person carrying out a combustion measurement should have been assessed as competent in the use of a flue gas analyser and the interpretation of the results.
- The flue gas analyser used should be one meeting the requirements of BS7927 or BS-EN50379-3 and be calibrated in accordance with the analyser manufacturers requirements, and
- Competence can be demonstrated by satisfactory completion of the CPA1 ACS assessment, which covers the use of electronic portable combustion gas analysers in accordance with BS7967, Parts 1 to 4.

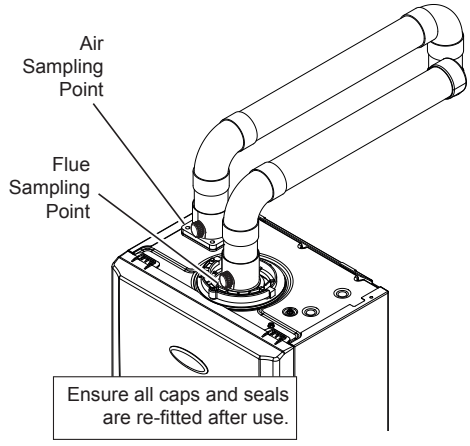

3.2 BOILER FRONT PANEL REMOVAL / REPLACEMENT

REMOVAL

1. Loosen the two screws retaining the front panel.
2. Pull the two spring clips down to disengage and pull panel forward and upward and remove.

REPLACEMENT

3. Hook the panel onto the top retaining clips.
4. Push the panel until the 2 bottom spring clips engage ensuring the 4 control knobs line up with the holes in the front panel.
5. Re-tighten the two retaining screws.

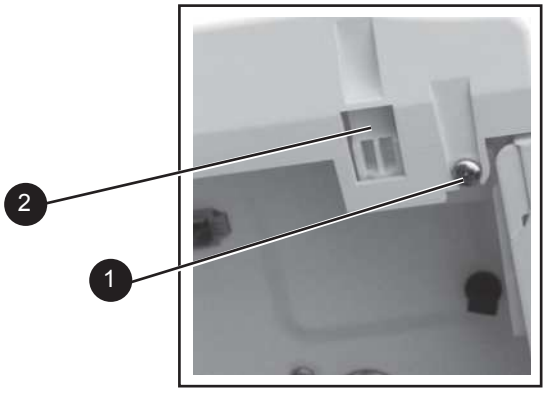

view from bottom of boiler

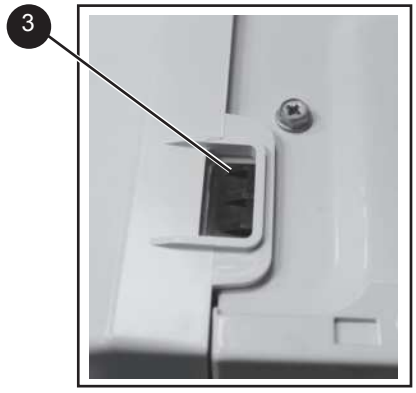

view from top of boiler

3.3 FAN AND VENTURI ASSEMBLY REMOVAL AND CLEANING

1. Disconnect the electrical leads from the fan.
2. Remove the clip from the gas control valve outlet and ease the pipe upwards rotate and then ease down to remove.
3. Remove the extended nut on the fan mounting bracket.
4. Lift off fan and venturi assembly.
5. Undo the two M4 screws and release the nozzle assembly.
6. Inspect the injector for blockage or damage.
7. Inspect fan outlet sealing gasket and replace if necessary.

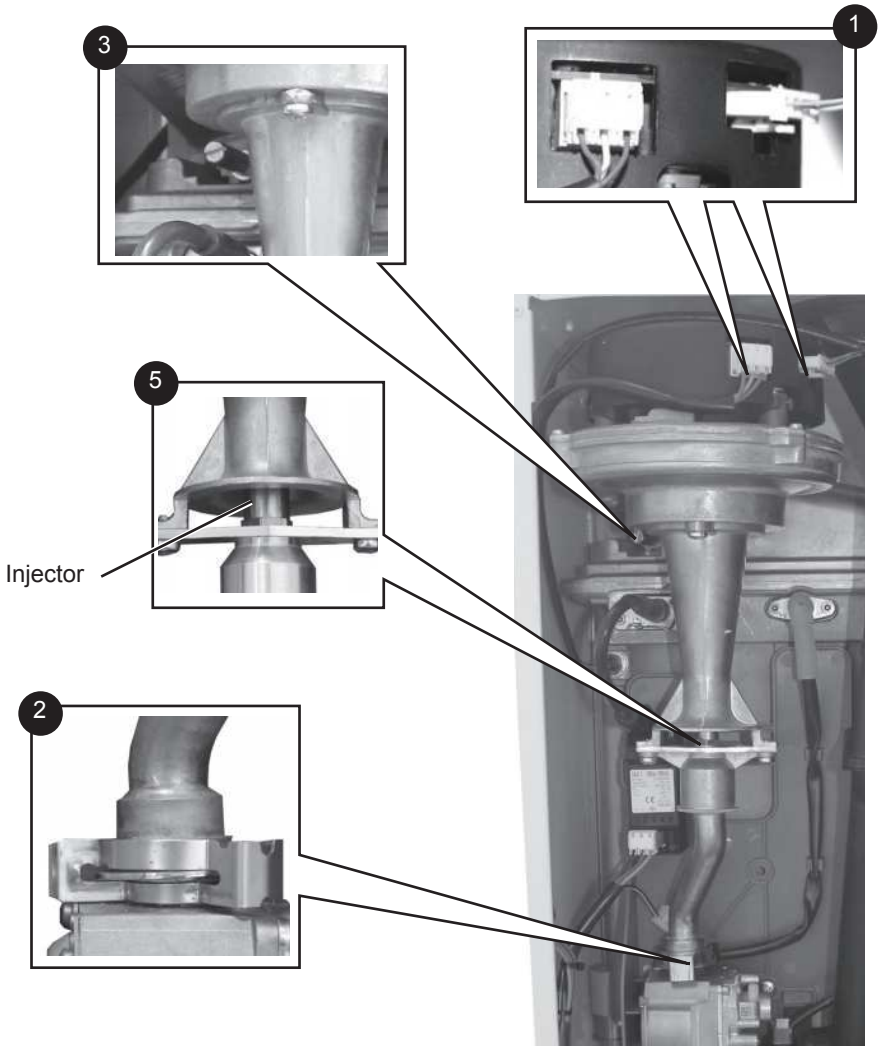

3.4 BURNER REMOVAL AND CLEANING

1. Ensure the sump is fully drained
2. Undo the two screws and remove the sump cover retaining the lower flue manifold.
3. Lift the manifold to clear the bottom sealing gasket and remove manifold.
4. Remove the 2 burner front fixing screws and loosen the 2 rear extended nuts by at least ten turns.
5. Lift off the burner from the combustion chamber. To facilitate the removal angle the burner as shown.

IMPORTANT

The burner head is a ceramic plaque construction. Care must be taken to ensure that **the burner is not placed down upon its face** as this may cause damage to the ceramic.

6. Brush off any deposits that may be on the ceramic with a SOFT brush.
7. Inspect the sealing gasket around the burner for any signs of damage. Replace as necessary.

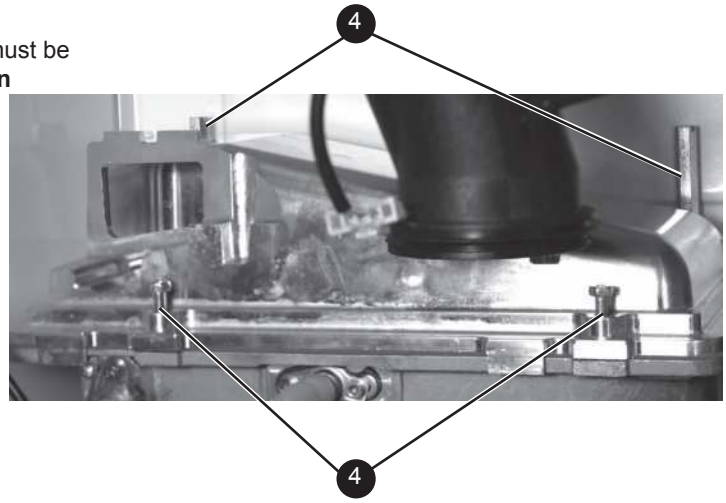

3.5 CLEANING THE CONDENSATE TRAP/SIPHON

1. Pull off the rubber pipe at the sump drain.
2. Disconnect the condensate drain pipe.
3. Turn the siphon clockwise to disengage and lift to remove.

Note. Keep siphon upright when removing

4. Clean siphon with water.
5. Re-assemble in reverse order.

When re-assembling ensure the trap is full of water.

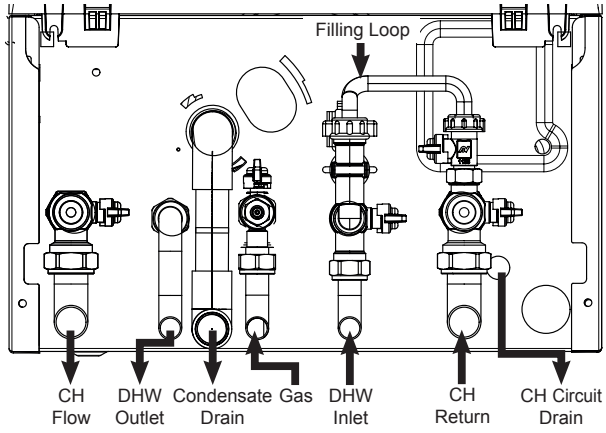

3.6 CLEANING THE HEAT EXCHANGER

Note: **Ensure the condensate trap/siphon is fully drained before cleaning.** Refer to Section 3.20.

1. Remove ignition and flame detection electrodes. Refer to Sections 3.13 & 3.14.
2. It is advisable to replace the sump cover prior to the water flush process.
3. Thoroughly flush the heat exchanger by pouring water into the top of the combustion chamber ensuring the full top area is covered.
4. Remove the sump cover and clean loose deposits from the sump.
5. Inspect the ignition and detection electrodes. Ensure that they are clean and in good condition - replace if necessary.
6. Re-fit the ignition and flame detection electrodes, ensuring that both earth tabs are fitted to ignition electrode.
7. Check that the ignition and detection gaps are correct. Refer to Sections 3.13 & 3.14.

1

Ignition Electrode

Flame Detection

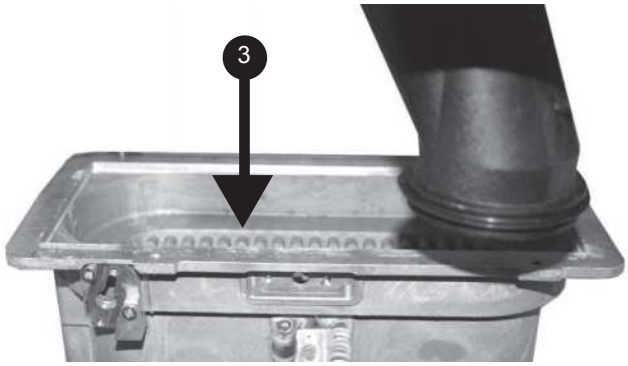

3.7 REASSEMBLY

Reassemble the boiler in the following order:

1. Ensure that the condensate trap/siphon is full of water.
2. Refit the burner ensuring the sealing gasket is correctly positioned and free from damage (tighten the 4 fixing screws in the sequence shown below).
3. Refit the fan / venturi assembly ensuring the retaining tabs are correctly positioned and the sealing gasket is correctly positioned and free from damage.
4. Reconnect the fan electrical leads.
5. Remove the sump cover and refit the lower flue manifold as shown.
6. Refit the sump cover.
7. Refit the boiler front panel.

   IMPORTANT. Ensure that the boiler front panel is correctly fitted and that a good seal is made.
8. Swing the control box back into its working position and secure.
9. Turn on the gas supply at the gas service cock.
10. Reconnect the electrical supply.

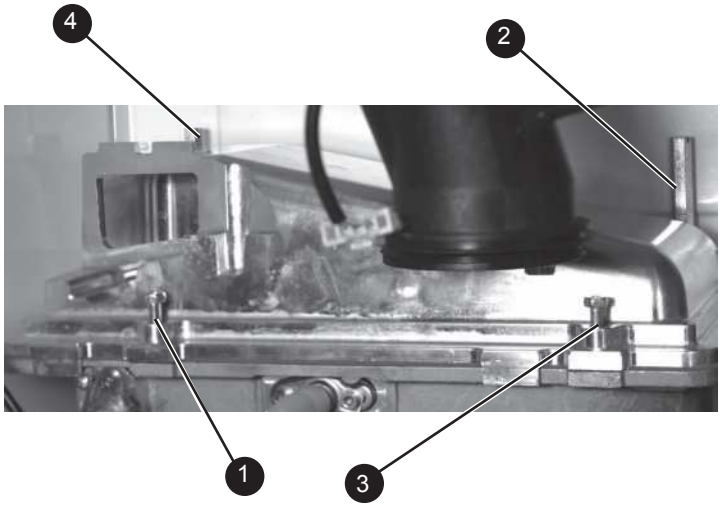

3.8 REPLACEMENT OF COMPONENTS

GENERAL

When replacing ANY component

1. Isolate the electricity supply.
2. Turn off the gas supply.
3. Remove the boiler front panel. Refer to Section 3.2.
4. Swing the control box down into its servicing position.

After replacing ANY component check operation of the boiler, including gas soundness, gas rate and combustion test.

IMPORTANT.
Ensure all gas valve connections are gas tight with a gas soundness check up to the gas control valve.

When work is complete, the front panel must be correctly refitted - ensuring that a good seal is made.

Notes.

1. *In order to assist fault finding, the control panel has an LCD diagnostic display. The key to boiler fault conditions is shown in Section 4.*
2. *In order to replace components in Sections 3.21-3.32 it is necessary to drain the boiler. Refer to Section 3.20.*

THE BOILER MUST NOT BE OPERATED WITHOUT THE FRONT PANEL FITTED

3.9 FAN REPLACEMENT

1. Refer to Section 3.8.
2. Disconnect the electrical leads from the fan.
3. Remove the clip from the gas control valve outlet.
4. Remove the extended nut retaining the fan mounting bracket.
5. Lift and remove the fan and venturi assembly.
6. Remove the screw and twist venturi anti-clockwise to remove venturi assembly, *noting the orientation of the venturi in relation to the fan body.*
7. Transfer the venturi assembly to the new fan, replacing the 'o' ring if evidence of damage or deterioration is visible.
8. Fit the new fan / venturi assembly ensuring the retaining tabs are correctly positioned and the fan outlet sealing gasket is correctly positioned and free from damage. Refit the extended nut.
9. Reassemble the boiler in reverse order, taking care not to overtighten the screw on the fan mounting bracket and ensure all gas 'o' rings are in place
10. Check that the boiler operates in both DHW and CH Modes.

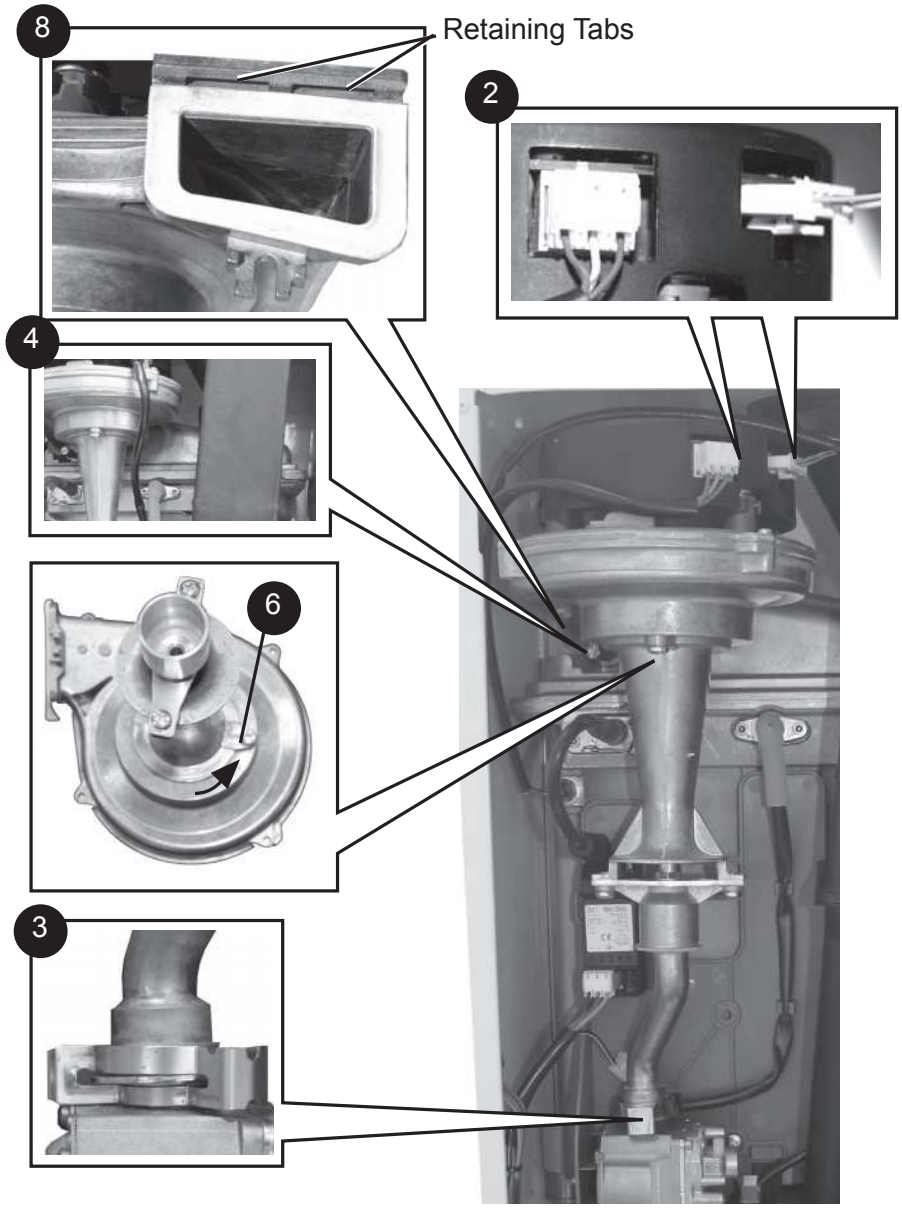

3.10 BURNER INJECTOR REPLACEMENT

1. Refer to Section 3.8.
2. Disconnect the electrical leads from the fan.
3. Remove the clip from the gas valve to venturi pipe and ease the pipe upwards, rotate and ease down to remove.
4. Loosen the screw retaining the fan mounting bracket.
5. Lift and remove the fan and venturi assembly.
6. Remove the 2 injector housing screws.
7. Withdraw the injector housing.
8. Fit the new injector housing complete with injector.
9. Reassemble in reverse order, ensuring that the new gas seal supplied is located correctly in the injector housing.
10. Check that the boiler operates in both DHW & CH modes.

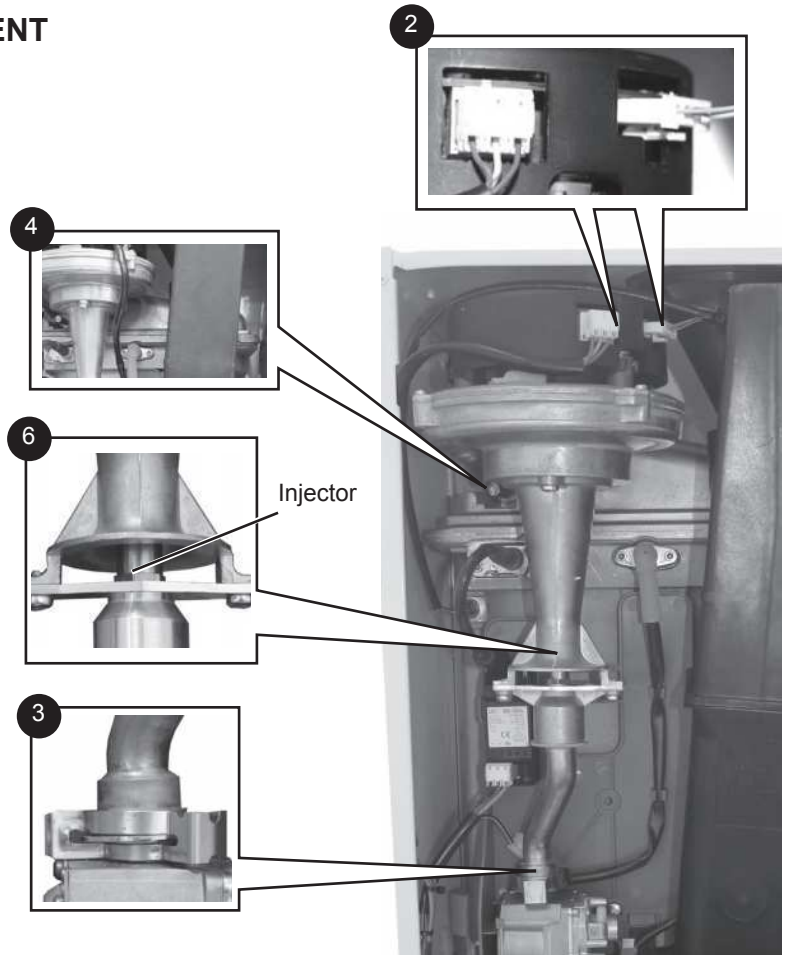

3.11 BURNER REPLACEMENT

1. See Section 3.2.
2. Refer to Section 3.8.
3. Disconnect 2 flag terminals from the flue thermostat.
4. Undo the two screws and remove the sump cover.
5. Lift the manifold to clear the bottom sealing gasket and remove manifold.
6. Remove the 2 front fixing screws and loosen the 2 rear extended nuts.
7. Lift off the burner from the combustion chamber. To facilitate the removal angle the burner as shown.
8. Fit the new burner, replacing any damaged or deteriorating sealing gasket.
9. Reassemble in reverse order. Refer to Section 3.7.
10. Check the operation of the boiler. Refer to Sections 2.23 & 3.24.

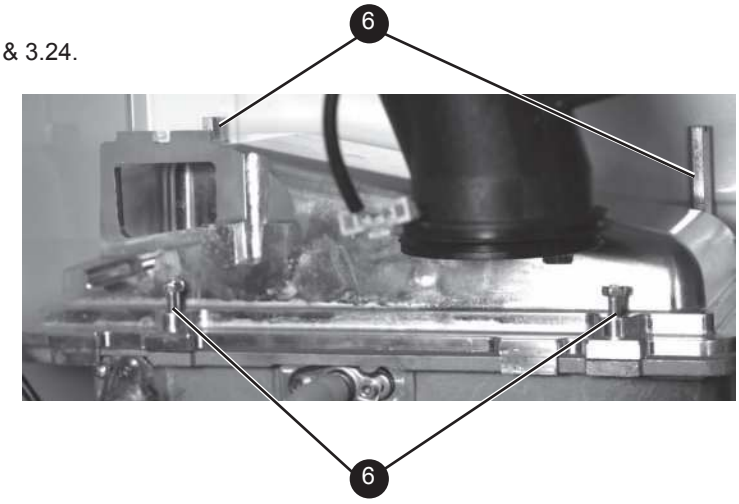

3.12 RETURN THERMISTOR REPLACEMENT

1. Refer to Section 3.8.
2. Unclip the return thermistor from the return pipe and withdraw it from the boiler.
3. Disconnect the electrical lead from the thermistor.
4. Reconnect the electrical lead to the new thermistor and reassemble in reverse order, ensuring that the thermistor is securely fitted to the pipe on the thermistor locator tab as shown.
5. Check that the boiler operates in both DHW & CH Mode.

3.13 IGNITION ELECTRODE REPLACEMENT

1. Refer to Section 3.8.
2. Remove the burner. Refer to Section 3.11.
3. Unplug the ignition lead from the electrode.
4. Remove the earth lead from the ignition electrode.
5. Remove the 2 screws holding the ignition electrode to the combustion chamber.
6. Remove the electrode.
7. Fit the new ignition electrode, using the new gasket supplied. Check dimensions as shown.
8. Reassemble in reverse order.
9. Check the operation of the boiler. Refer to Section 2.23 & 2.24.

Ignition Electrode

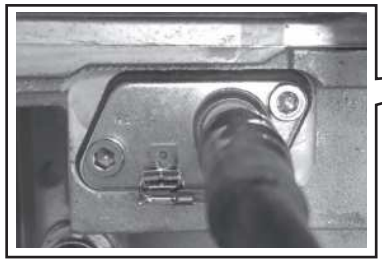

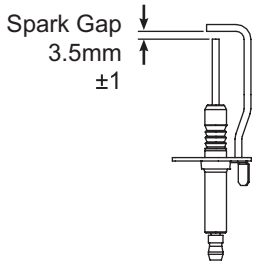

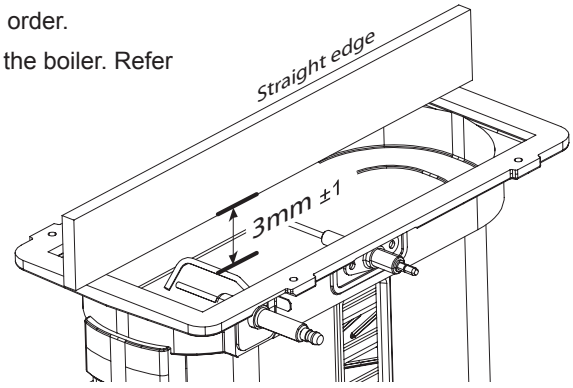

3.14 FLAME DETECTION ELECTRODE REPLACEMENT

1. Refer to Section 3.8.
2. Remove the burner. Refer to Section 3.4.
3. Unplug the flame detection lead from the electrode.
4. Remove the 2 screws retaining the detection electrode.
5. Remove the electrode.
6. Fit the new flame detection electrode, using the new gasket supplied.
7. Reassemble in reverse order.
8. Check that the boiler operates in both DHW & CH modes.

Flame Detection Electrode

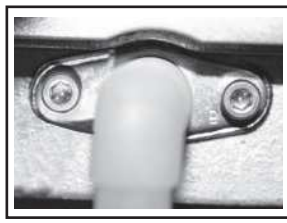

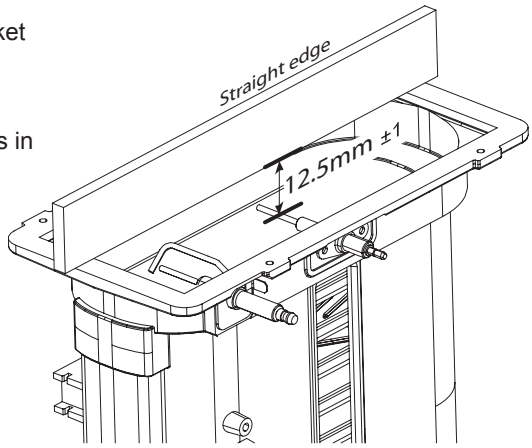

3.15 SPARK GENERATOR REPLACEMENT

1. Refer to Section 3.8
2. Disconnect the leads from the spark generator.
3. Gently push down the generator to release the top clip from the gas valve mounting bracket.
4. Lift the spark generator up and out of the bottom retaining moulding.
5. Fit the new spark generator and re-assemble in reverse order ensuring that the the earth lead is replaced.
6. Check that the boiler operates in both DHW & CH modes.

Spark Generator

3.16 GAS CONTROL VALVE REPLACEMENT

1. Refer to Section 3.8.
2. Unplug the electrical lead connection from the gas control valve.
3. Remove the outlet gas valve clip and slide the pipe upwards.
4. Undo the gas inlet pipe union at the inlet to the gas valve.
5. Undo the single screw fixing the gas valve to the mounting bracket and withdraw the valve forwards.
6. Fit the new gas control valve ensuring that the ‘o’ ring and sealing washer are in place and reconnect gas and electrical connections.
7. Ensure all gas valve connections are gas tight with a gas soundness check up to the gas control valve.
8. Check that the boiler operates in both DHW & CH modes.

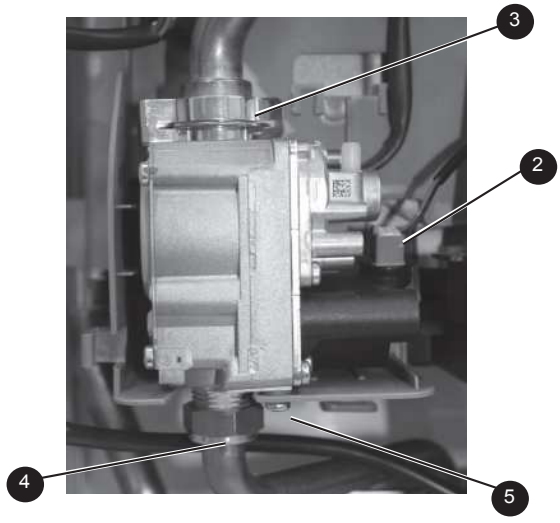

3.17 DIVERTER VALVE ACTUATOR REPLACEMENT

Refer to Section 3.8.

To remove the motor:

1. Remove the condensate trap/siphon. Refer to Section 3.5.
2. Place a flat bladed screwdriver in the actuator slot provided and ease out the actuator.
3. Disconnect the electrical plug from the motor.
4. Fit the new motor ensuring the arm is correctly engaged in the metal fork and re-assemble in reverse order ensuring the condensate trap/ siphon is refilled with water. Refit electrical plug.
5. Check the operation of the boiler.

Note. *All spares will be delivered in mid-position.*

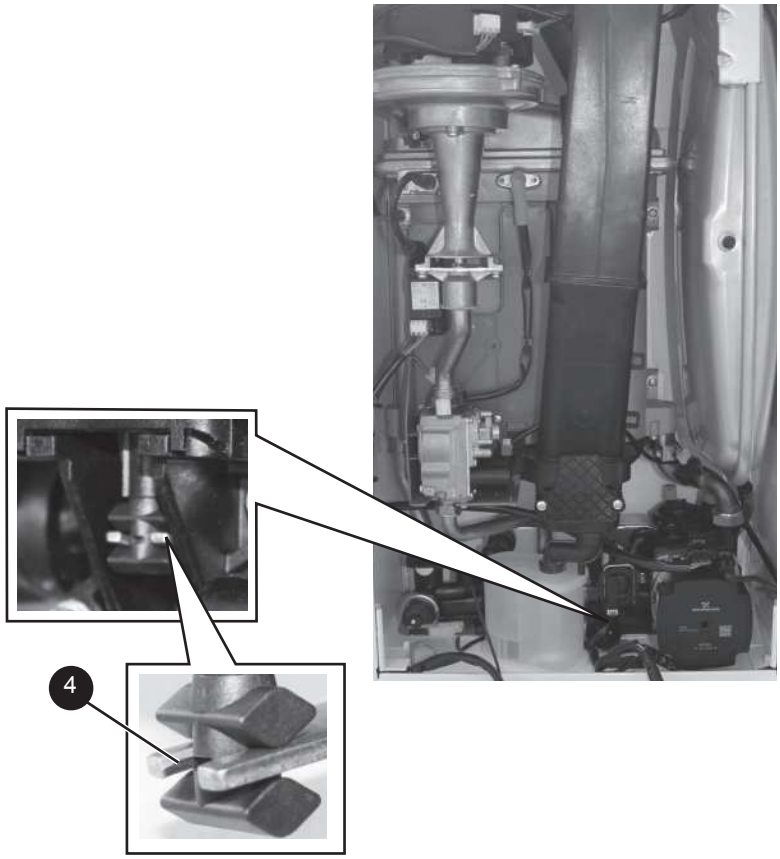

3.18 CONDENSATE TRAP/SIPHON REPLACEMENT

1. Refer to Section 3.8.
2. Pull off the rubber pipe at the sump drain.
3. Disconnect the condensate drain pipe.
4. Turn the siphon clockwise to disengage and lift to remove.

Note. Keep siphon upright when removing.

5. Clean siphon with water or replaced if damaged.
6. Re-assemble in reverse order.
7. When re-assembling ensure the trap is full of water.
8. Check that the boiler operates in both DHW and CH modes.

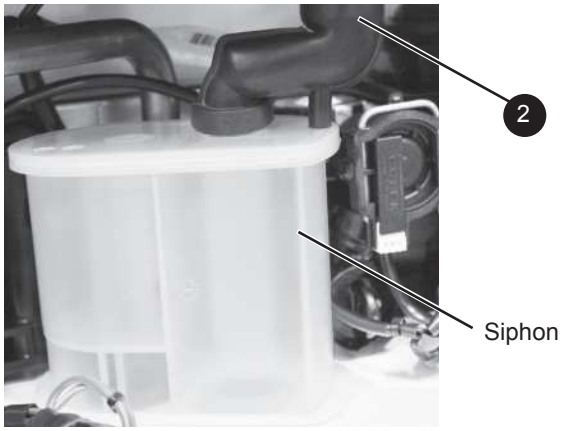

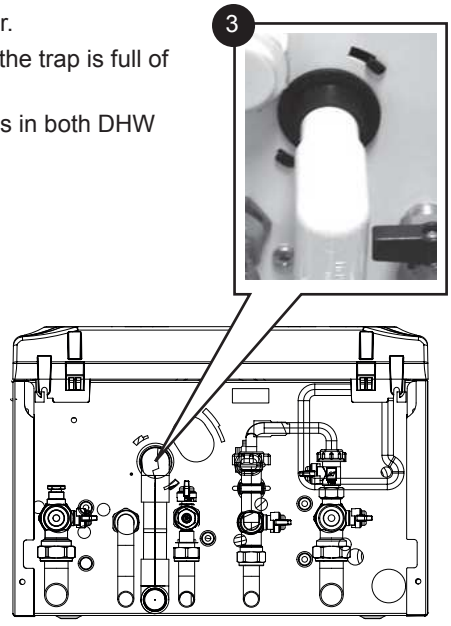

3.19 PCB REPLACEMENT

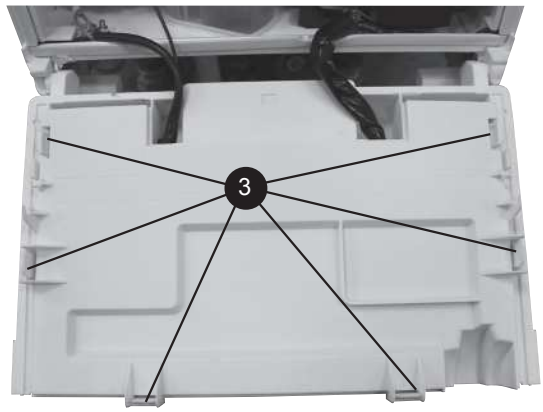

Note. *Fit the earth strap provided with the PCB to your wrist and secure to a suitable earth on the boiler chassis.*

1. Refer to Section 3.8.
2. Ensure the control knobs are in the 12 o clock position.
3. Carefully release the six retaining clips and remove control box cover.
4. Unplug all lead connections to the PCB, also where applicable, push the small plastic clip with an electrical screwdriver to facilitate plug removal.
5. Spring out the four side retaining clips and pull the PCB upwards to clear the 4 corner retaining posts.
6. Take the new PCB.
7. Re-connect all plug connections.
8. Reassemble in reverse order.
9. Turn power on, display shows:

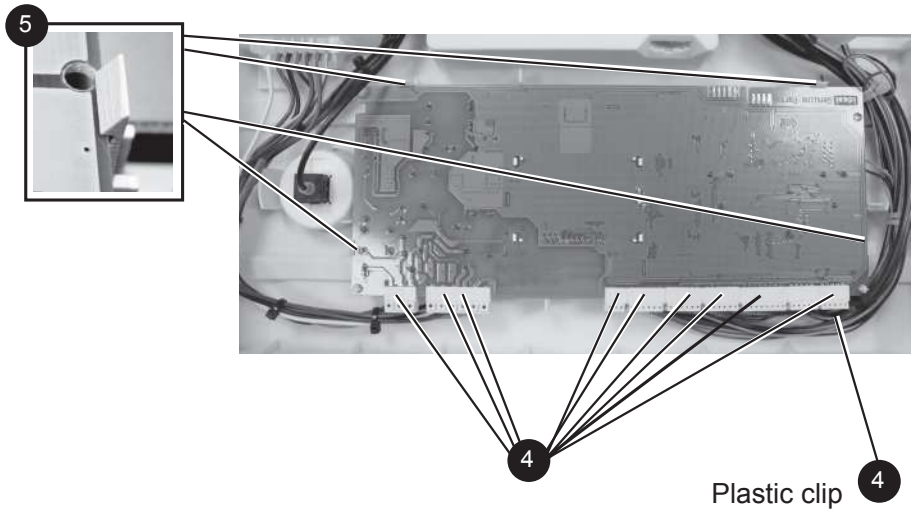

Installer
Turn all dials to mimimum position
Menu

Turn all dials to minimum position and the following screen will be shown:

Installer
Initialise spare PCB?
Yes

Press “Yes” and the following screen will be shown:

Installer
Switch mains off After 5s switch mains on

Switch mains off. After 5s switch mains on. The following screen will be shown:

Select Boiler Model	
1/4 Combi 24kW Natural Gas	
More	Select

Press “More” until the desired output and gas type is displayed, then press “Select”. The following screen will be shown:

Installer	
Program this model?	
Back	Yes

Press “Yes” and the model will be set and normal operation begins. Turn the dials to the desired positions.

10. Check that the boiler operates in both DHW and CH modes.

IMPORTANT. IT IS CRITICAL FOR SAFE OPERATION THAT THE CORRECT BOILER SIZE AND FUEL TYPE IS ENTERED INTO THE BOILER.

3.20 DRAINING THE BOILER

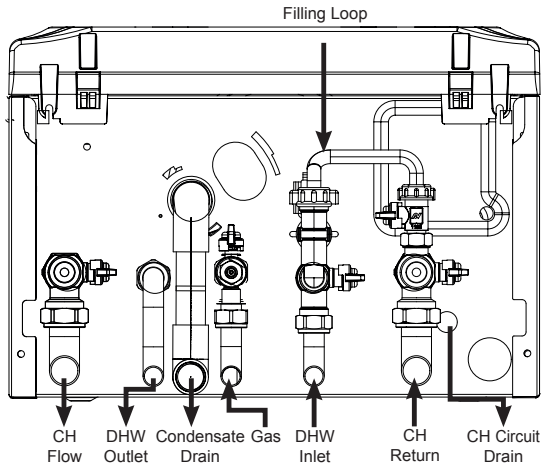

CENTRAL HEATING CIRCUIT

1. Refer to Section 3.8.
2. Close all the CH water isolating valves on the boiler inlet.
3. To drain the primary heat exchanger circuit: Open the drain valve and attach a length of hose to the CH drain point.
4. After replacing any component on the boiler, remove the hose, close the drain valve and open all system isolating valves (re-pressurise as appropriate by re-connecting the filling loop, refer to Section 2.16) before proceeding to check operation of the boiler.
5. Disconnect filling loop. Refer to Section 2.16.
6. Check that the boiler operates in both DHW & CH modes.

DOMESTIC HOT WATER CIRCUIT

1. Refer to Section 3.8.
2. Close all the DHW water isolating valves on the boiler inlet.
3. To drain the domestic hot water circuit: As there is no direct drain for the domestic hot water circuit, depending on the location of the boiler, opening the lowest hot water tap may drain this circuit. However it must be noted that some residual water will be experienced during replacement of components.
4. After replacing any component on the boiler, close tap, close the drain valve and open all system isolating valves (re-pressurise as appropriate by re-connecting the filling loop, refer to Section 2.16) before proceeding to check operation of the boiler.
5. Disconnect filling loop. Refer to Section 2.16.
6. Check that the boiler operates in both DHW & CH modes.

3.21 DHW FLOW TURBINE SENSOR REPLACEMENT

1. Refer to Section 3.8.
2. Drain the DHW system. Refer to Section 3.20.
3. Pull off the electrical connection.
4. Using a suitable tool, lift and remove the retaining clip.
5. Use the clip to ease the turbine sensor from its housing.
6. Re-assemble in reverse order.
7. Check that the boiler operates in both DHW & CH modes.

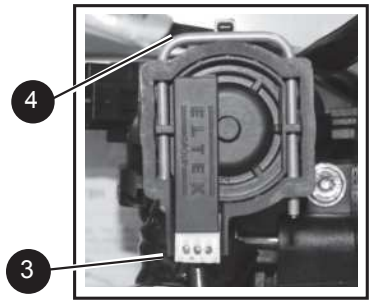

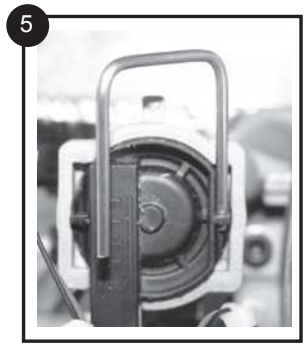

3.22 PRESSURE GAUGE REPLACEMENT

1. Refer to Section 3.8.
2. Drain the heating system. Refer to Section 3.20.
3. Remove the boiler front (See Section 3.2), lower the control panel and remove the control box cover.
4. Ensuring there is no pressure in the system unclip the C clip from the flow manifold port and remove the capillary connection together with ‘o’ ring.
5. Releasing the two retaining clips on the pressure gauge ease the pressure gauge through the front of the control panel.
6. Fit the new pressure gauge from the front of the control panel ensuring correct orientation. Locate push fit connection into port ensuring ‘o’ ring in place and secure with the C clip.
7. Refill the boiler. Refer to Section 2.15.
8. Check that the boiler operates in both DHW & CH modes.

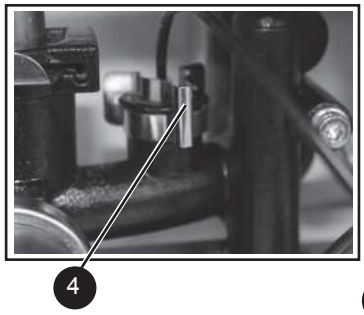

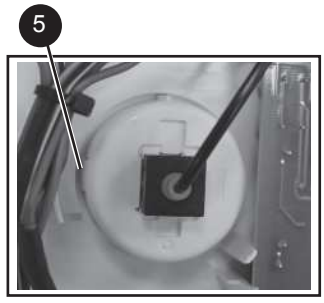

3.23 SAFETY RELIEF VALVE REPLACEMENT

1. Refer to Section 3.8.
2. Drain the boiler. Refer to Section 3.20.
3. Remove the clip on return thermistor. Refer to Section 3.12.
4. Pull out and remove the clip (positioned behind the safety valve) retaining the safety valve.
5. Undo the safety valve pipe compression fitting positioned outside the boiler casing.
6. Lift out the safety valve/pipe assembly.
7. Remove the safety valve pipe and transfer to the new safety valve.
8. Reassemble in reverse order ensuring the retaining clip is correctly fitted, the pipe compression fitting retightened and return thermistor is re-clipped.
9. Refill the boiler. Check that the boiler operates in both DHW & CH modes.

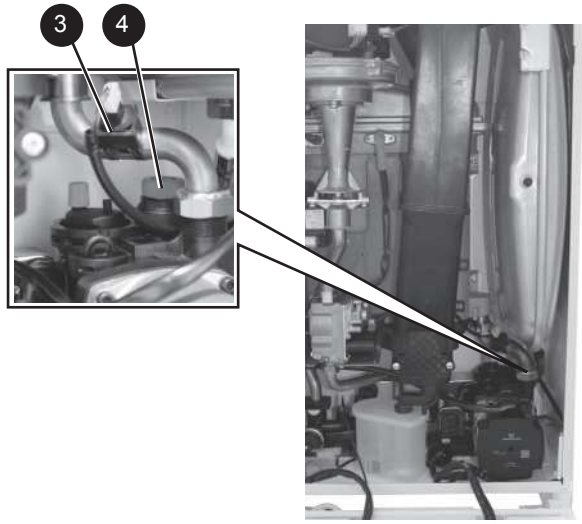

3.24 PUMP AUTOMATIC AIR VENT REPLACEMENT

1. Refer to Section 3.8.
2. Drain the boiler. Refer to Section 3.20.
3. Remove the expansion vessel. Refer to Section 3.32.
4. Firstly, increase access area by disconnecting the 22mm pipe connection at top of pump manifold and bottom of heat exchanger and remove pipe. Refer to Section 3.26.
5. The automatic air vent head is retained in the pump body with a bayonet connection. The air vent head and float assembly is removed by turning the head anti-clockwise (viewed from above) and pulling upwards.
6. Reassemble in reverse order. Ensure the air vent head ‘o’ ring seal is fitted.
7. Ensure the air vent cap is loose.
8. Refill the boiler. Refer to Section 2.15. Check for leaks around the new air vent joint.
9. Check that the boiler operates in both DHW & CH modes.

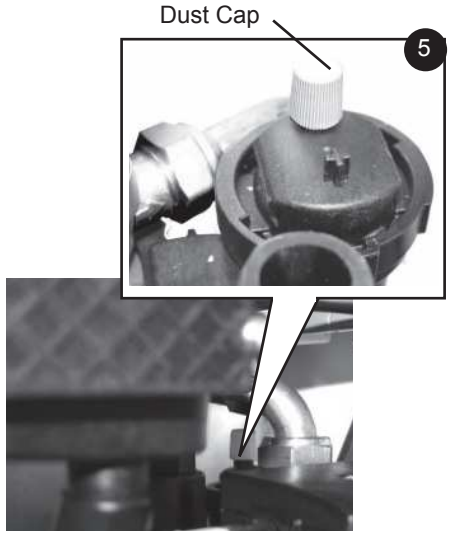

3.25 DHW FILTER & DHW FLOW REGULATOR CLEANING/REPLACEMENT

1. Refer to Section 3.8.
2. Drain the DHW system. Refer to Section 3.20.
3. Turn the housing anti clockwise and pull forward to remove the cartridge.
4. Using a pair of pliers, pull out the plastic filter/flow regulator.
5. Clean or replace filter as necessary.
6. Reassemble in reverse order.
7. Refill the boiler.
8. Check that the boiler operates in both DHW & CH modes.

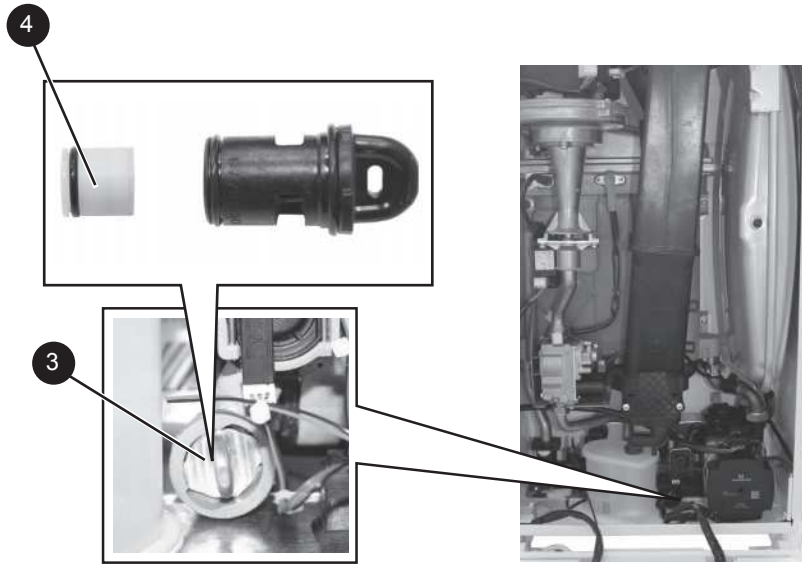

3.26 DIVERTER VALVE BODY ASSEMBLY REPLACEMENT

To remove the valve body assembly:

1. Refer to Section 3.8.
2. Drain the boiler. Refer to Section 3.20.
3. Remove the condensate trap/siphon. Refer to Section 3.18.
4. Remove the electrical plug. Refer to Section 3.17.
5. Place a flat bladed screwdriver in the diverter valve motor body slot provided and ease out the motor. Refer to Section 3.17.
6. Remove the return thermistor electrical connection. Refer to Section 3.12.
7. Remove the pump electrical connections. Refer to Section 3.28 no. 3.
8. Remove DHW Turbine electrical connection. Refer to Section 3.21 no. 3.
9. Remove the DHW plate heat exchanger (note orientation). Refer to Section 3.27.
10. Undo the safety valve pipe compression fitting. See No.5 Section 3.23.
11. Loosen the nut above pump and rotate the pipe.
12. If required remove expansion vessel connection hose. Refer to Section 3.32.
13. Remove the DHW inlet and CH return connection situated beneath the boiler.
14. Remove the four torx head screws fixing the return manifold to the boiler sheet steel base.
15. Lift the manifold assembly and remove from boiler.
16. Twist and remove the DHW manifold.
17. Remove the two diverter valve body fixing screws and withdraw the diverter valve body assembly.
18. Fit the new diverter valve body assembly and replace the two fixing screws.
19. Refit the DHW manifold, fit the assembly back to the boiler and reassemble in reverse order.
20. Refill the boiler. Check that the boiler operates in both DHW & CH modes.

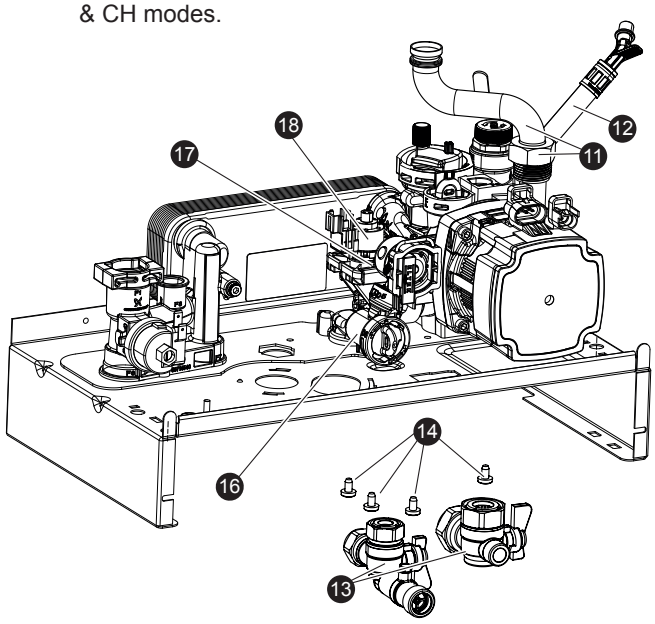

3.27 DHW PLATE HEAT EXCH. REPLACEMENT

1. Refer to Section 3.8.
2. Drain the boiler. Refer to Section 3.20.
3. Remove condensate trap/siphon. Refer to Section 3.18.
4. Remove the diverter valve actuator. Refer to Section 3.17.
5. Remove the 2 allen screws securing the plate heat exchanger to the composite housings.
6. Manoeuvre the plate heat exchanger out of the top LH or centre of the controls area. Be aware of any water spillage.
7. Fit the new plate heat exchanger, using the new o-rings supplied.
   Note. *Ensure that the depressions are on the bottom prior to fitting.*
8. Reassemble in reverse order.
9. Refill the boiler. Refer to Section 2.15.
10. Check that the boiler operates in both DHW & CH modes.

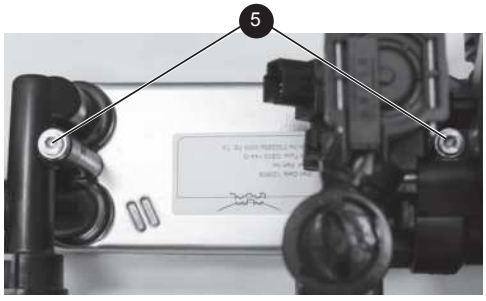

3.28 PUMP HEAD REPLACEMENT

1. Refer to Section 3.8.
2. Drain the boiler. Refer to Section 3.20.
3. Disconnect the two electrical leads from the pump.
4. Remove the 4 allen screws retaining the pump head.
5. Remove the pump head.
6. Fit the new pump head.
7. Reassemble in reverse order.
8. Refill the boiler. Refer to Section 2.15.
9. Check that the boiler operates in both DHW & CH modes.

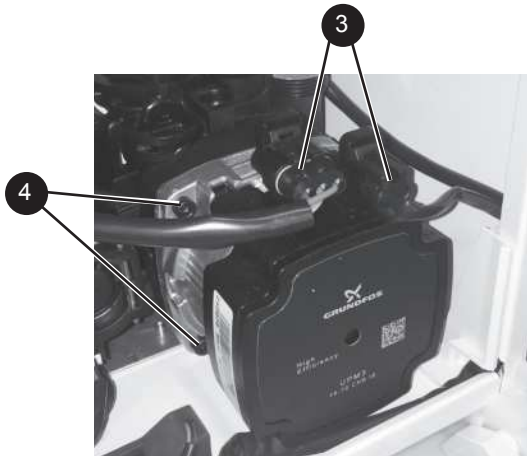

3.29 CH WATER PRESSURE SWITCH REPLACEMENT

1. Refer to Section 3.8.
2. Drain the boiler. Refer to Section 3.20.
3. Pull off the two electrical connections.
4. Using a suitable tool, pull out the metal retaining clip.
5. Carefully withdraw the pressure switch.
6. Fit the new pressure switch and re-assemble in reverse order.
7. Refill the boiler. Refer to Section 2.15.
8. Check that the boiler operates in both DHW & CH modes.

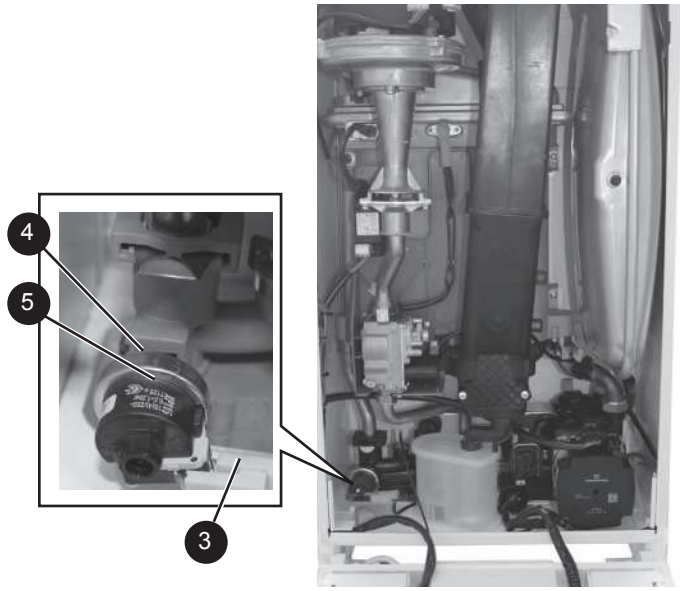

3.30 FLOW THERMISTOR REPLACEMENT

1. Refer to Sections 3.8.

2. Drain down the boiler. Refer to Sections 3.20.

3. Unplug the electrical lead.

4. Unscrew the thermistor (to facilitate removal a 13mm socket spanner should be used).

5. Fit the new thermistor using the sealing washer provided.

6. Reassemble in the reverse order.

7. Refill the boiler. Refer to Section 2.15.

8. Check that the boiler operates in both DHW & CH modes.

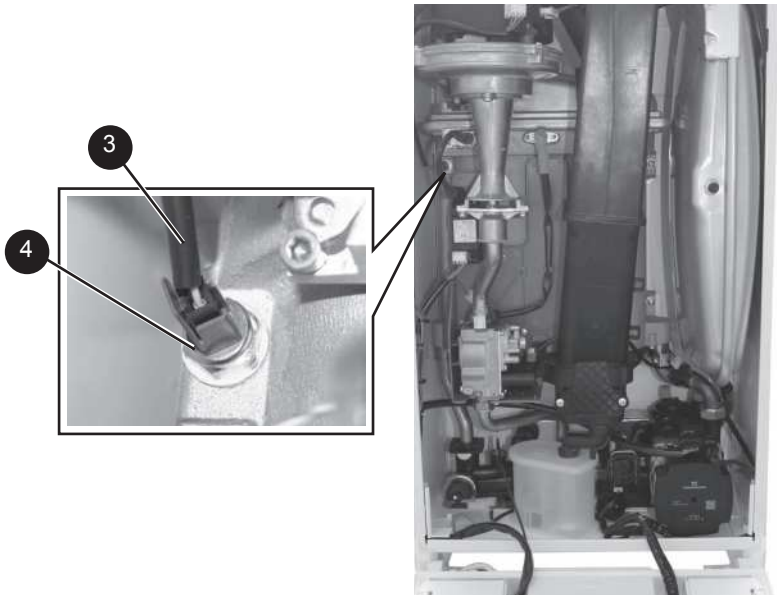

3.31 HEAT ENGINE REPLACEMENT

Refer also to Section 2.1 - 'Boiler Exploded View'

IMPORTANT
Before starting the removal procedure, protect the gas and electrical controls with a waterproof sheet or plastic bag.

1. Refer to Section 3.8.
2. Drain the boiler. Refer to Section 3.20.
3. Remove the fan / venturi assembly and place on one side. Refer to Section 3.3.
4. Remove the burner and place on one side. Refer to Section 3.4.
5. Remove the ignition and detection electrodes. Refer to Section 3.13 & 3.14.
6. Remove the spark generator. Refer to Section 3.15.
7. Remove the gas valve. Refer to Section 3.16.
8. Remove the expansion vessel. Refer to Section 3.32.
9. Remove the flow and return thermistors. Refer to Sections 3.12 & 3.30.
10. Remove the 2 M5 screws retaining the gas valve mounting bracket and transfer bracket to the new heat exchanger.
11. Undo the pump union nut and remove pipe.
12. Remove the two retaining pipe clips and remove pipes.
13. Remove the condensate rubber pipe. Refer to Section 3.18, no. 2.
14. Remove the two heat exchanger fixing screws.
15. Remove the Heat exchanger, slide out of location bracket.
16. If replacement sump required: Rotate heat exchanger assembly 180º. Place new sump onto heat exchanger, ensuring correct orientation and seal is in place. Then gently apply pressure to the base of the sump at each tab fixing point and engage tabs onto the heat exchanger.
17. Reassemble in reverse order, ensuring the heat exchanger is located correctly in the LHS retaining bracket. Replace any new 'o' rings supplied with new heat exchanger and replace gaskets or seals if any sign of damage is evident. When replacing the spring clips located on the return pipe connection, ensure clip is oriented to correctly match connecting pipe diameters.
18. Ensure the trap/siphon is filled with water. Refer to Section 3.18.
19. Refill the boiler and check for leaks. Refer to Section 2.15.
20. Ensure all gas valve connections are gas tight with a gas soundness check up to the gas control valve.
21. Check that the boiler operates in both DHW & CH modes.

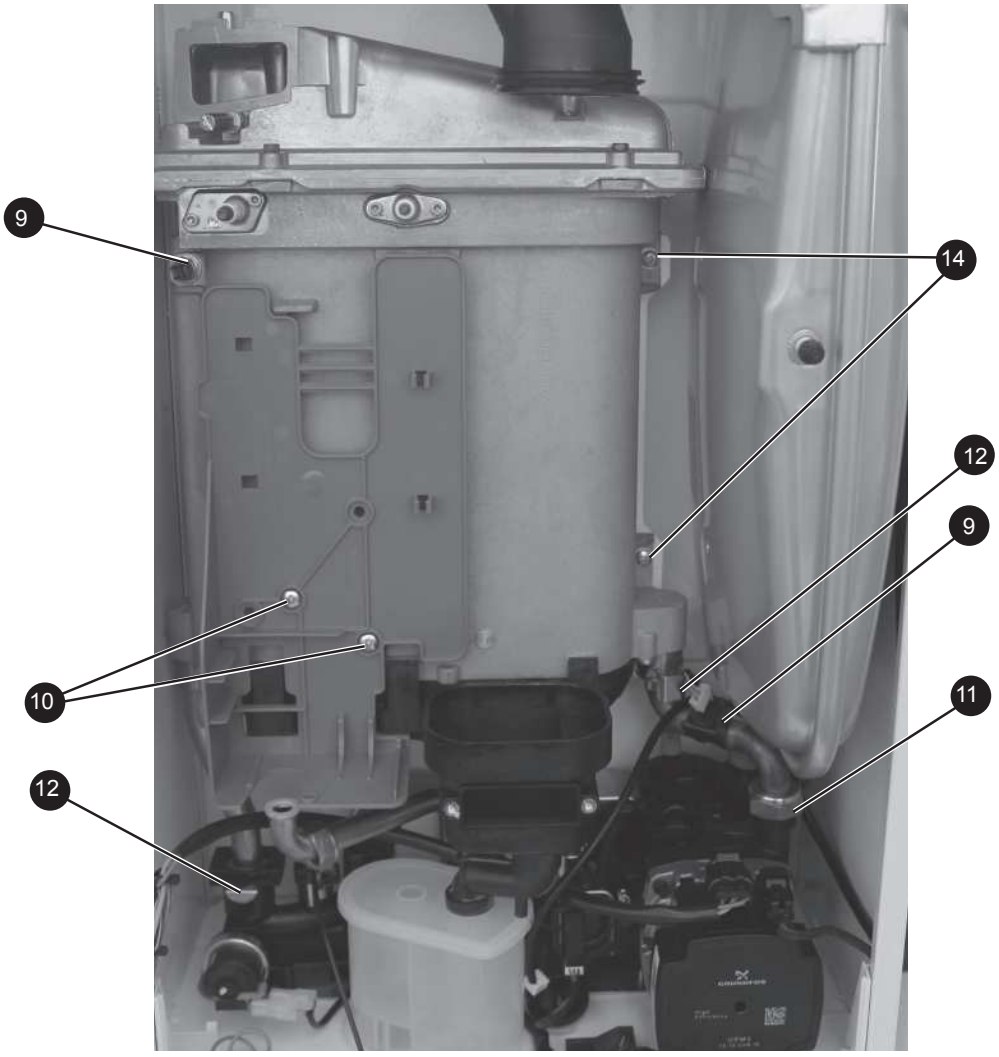

Shown as 180º position

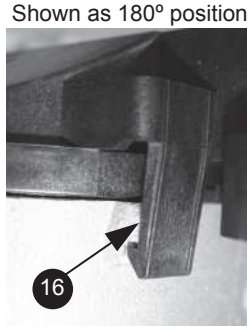

3.32 EXPANSION VESSEL RECHARGING & REPLACEMENT

RECHARGING

1. Refer to Section 3.8.
2. Remove the charge point cover.
3. Recharge the tank pressure to 0.75 bar.
4. Re-assemble in reverse order.
5. Check that the boiler operates in both DHW & CH modes.

REPLACEMENT

6. Refer to Section 3.8.
7. Drain the boiler CH circuit. Refer to Section 3.20.
8. Remove the retaining clip on the vessel water connection pipe and remove the pipe.
9. Support the expansion vessel and unscrew the 2 screws from the securing bracket, located on the top of the boiler, and remove. (Note the position of the bracket on the vessel)
10. Remove the expansion vessel.
11. Fit the new expansion vessel.
12. Reassemble in reverse order ensuring the seal is in place.
13. Refill the boiler and check for leaks. Refer to Section 2.15.
14. Check tht the boiler operates in both DHW & CH modes.

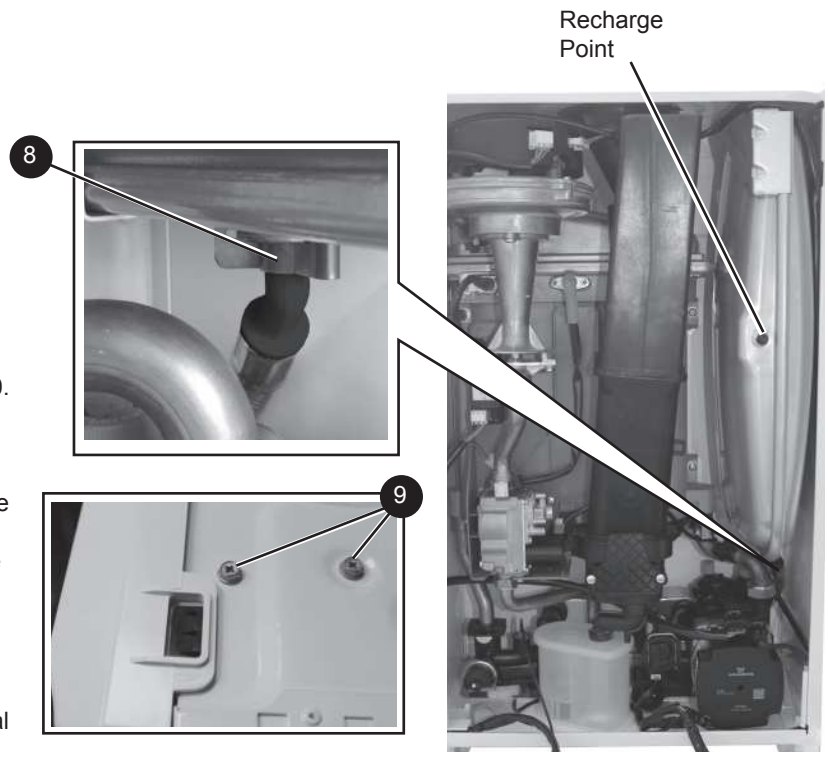

4.1 FAULT FINDING CHART MAIN MENU

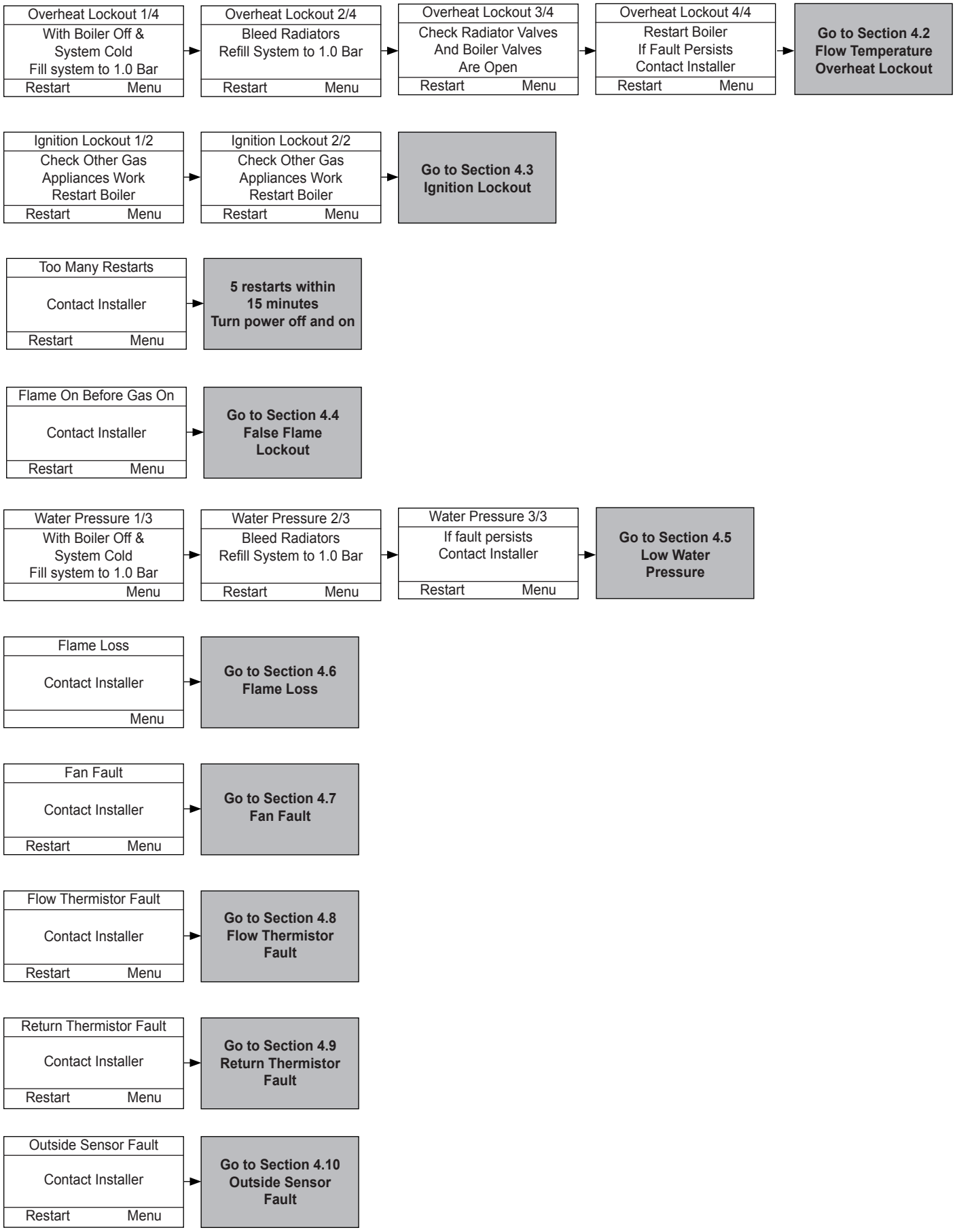

continued.....

RESTART PROCEDURE: TO RESTART BOILER PRESS THE RESTART BUTTON.

Low Mains Voltage Contact Electricity Provider Menu	**Low Mains Voltage Contact Electricity Provider**
PCB Fault Contact Installer Restart Menu	**Replace PCB**
Spare PCB Not Set Switch Off Wait 5s Switch On Restart Menu	**Follow instructions in Section 3.19**
High Mains Voltage Contact Electricity Provider Menu	**Contact Electricity Provider**
Flow/Return Reversed Contact Installer Menu	**Check Return Thermistor**
Room Stat Fault Check Room Stat Batteries Menu	**Check Room Stat Batteries**
No CH operation but DHW operates OK	**Go to Section 4.11**
No DHW operation but CH operates OK	**Go to Section 4.12**
No Display	**Go to Section 4.13**

4.2 OVERHEAT LOCKOUT

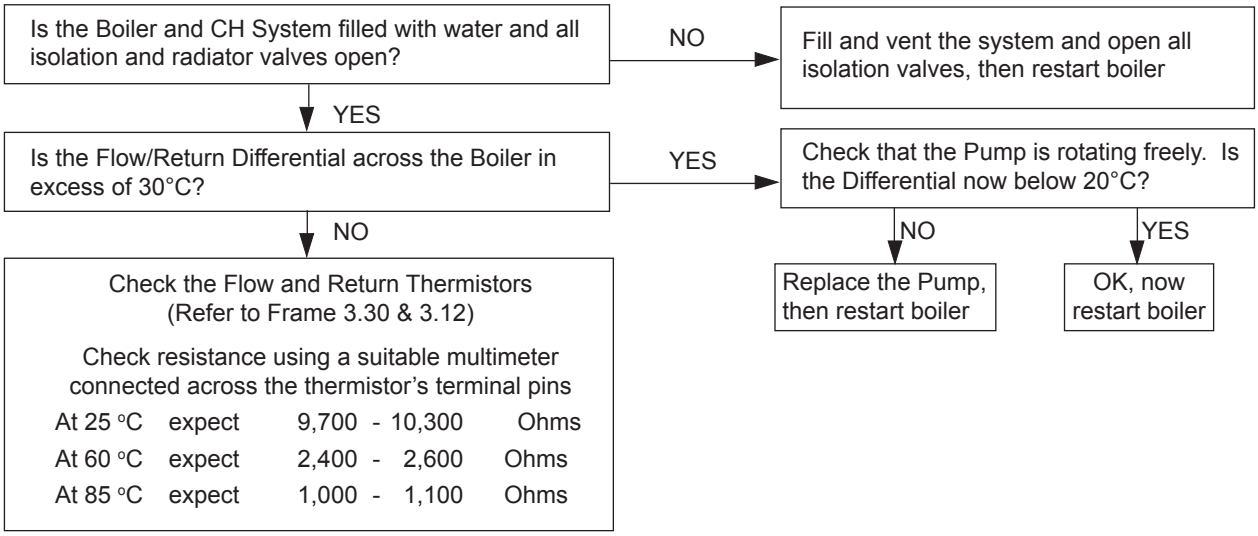

4.3 IGNITION LOCKOUT

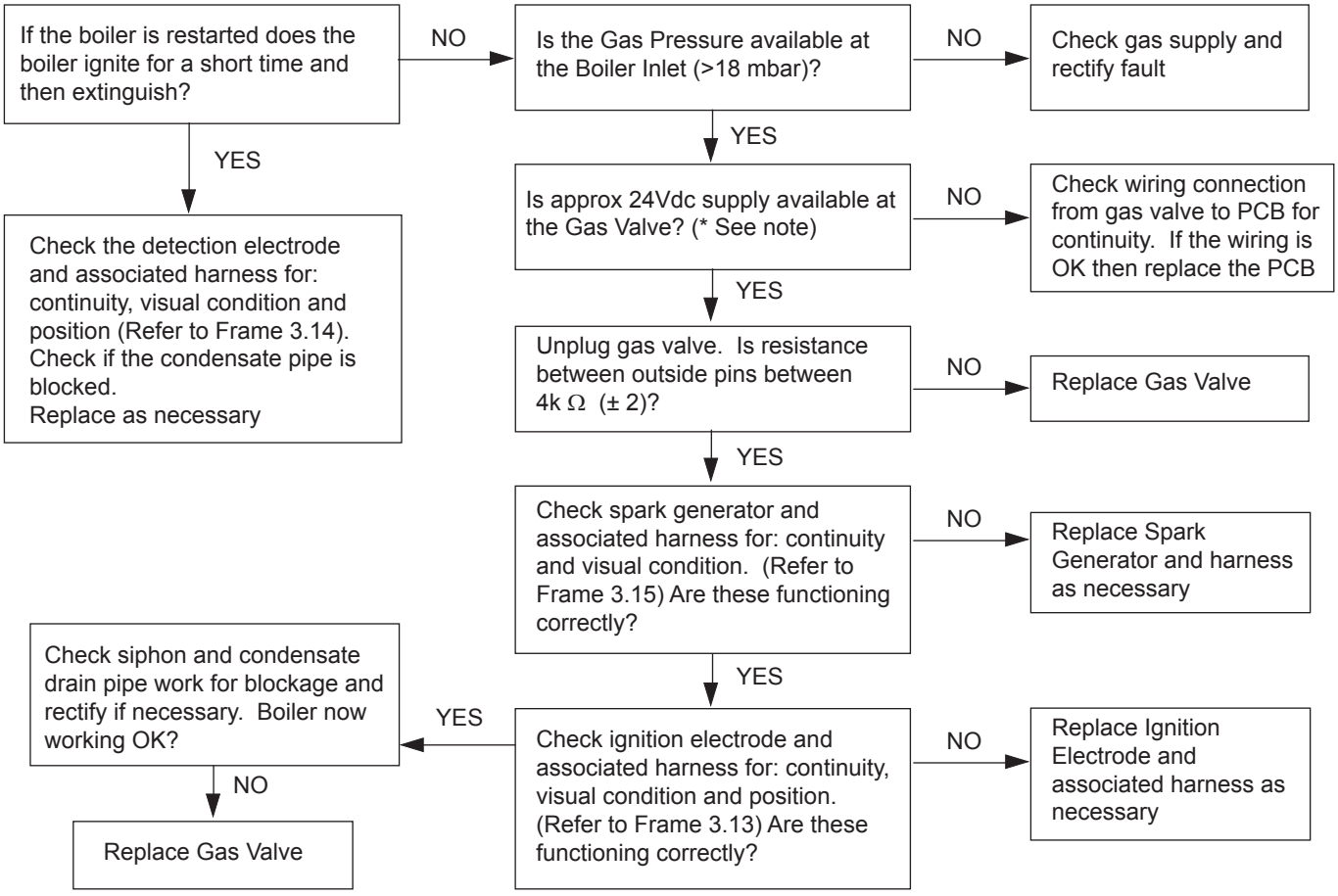

4.4 FLAME ON BEFORE GAS VALVE ON

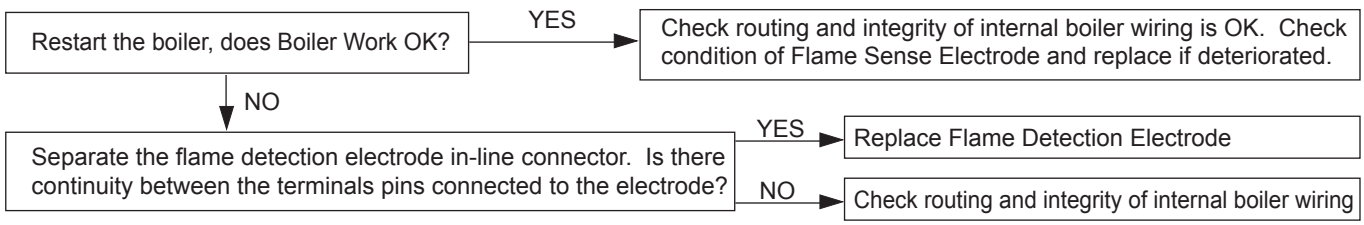

RESTART PROCEDURE - To restart boiler, turn mode knob to restart position and immediately turn knob back to required setting.

4.5 LOW WATER PRESSURE

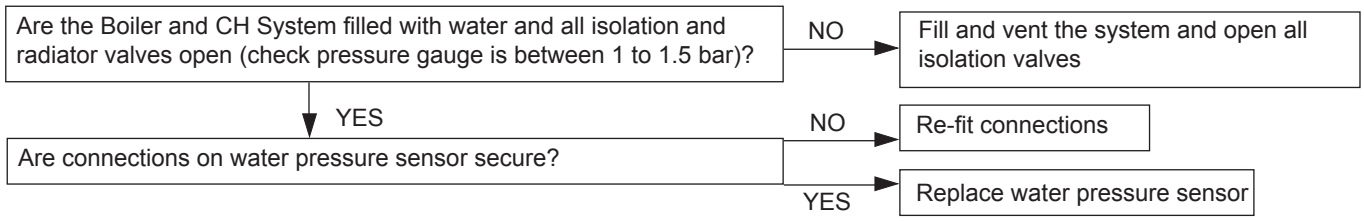

4.6 FLAME LOSS

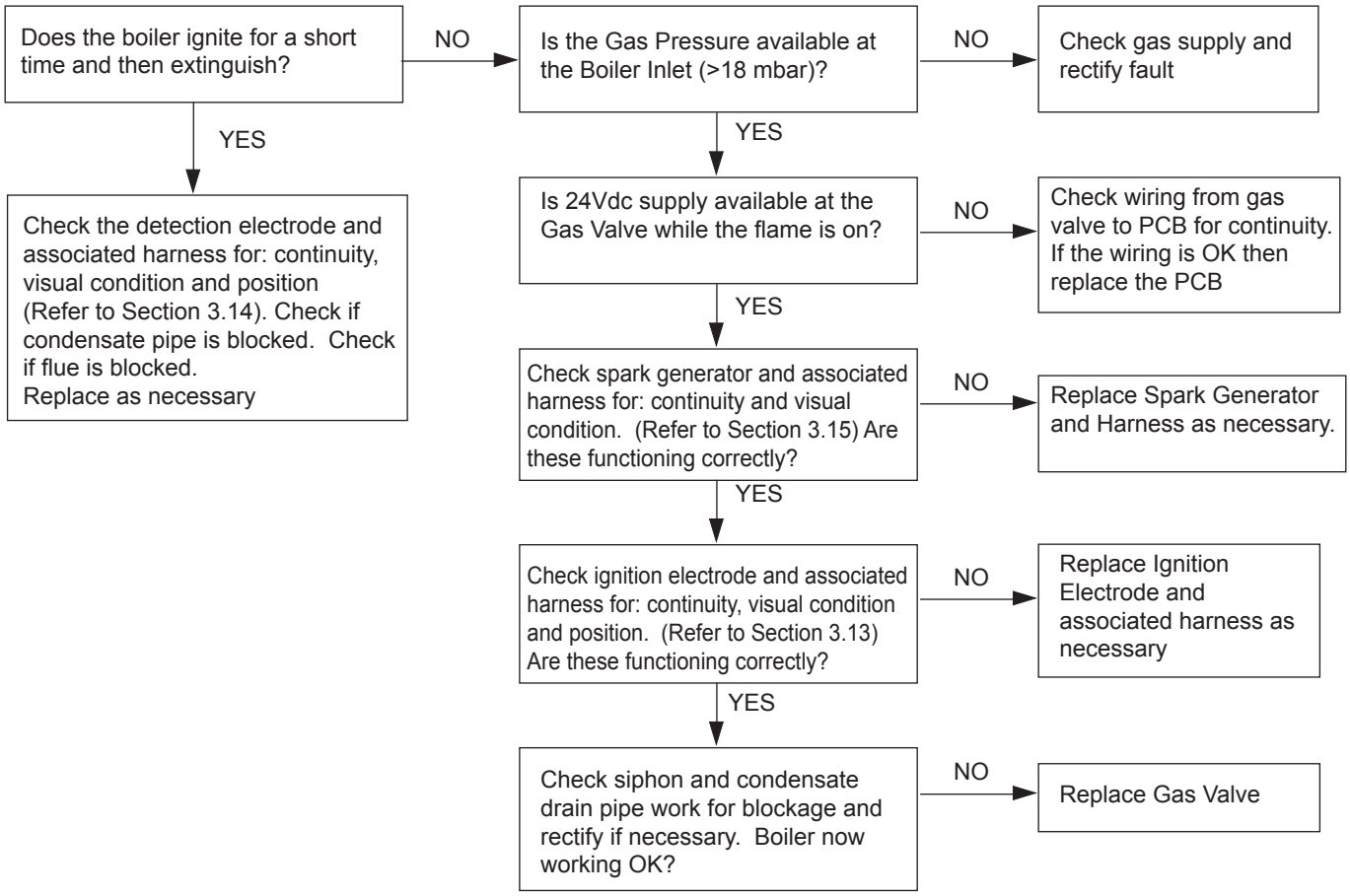

4.7 FAN FAULT

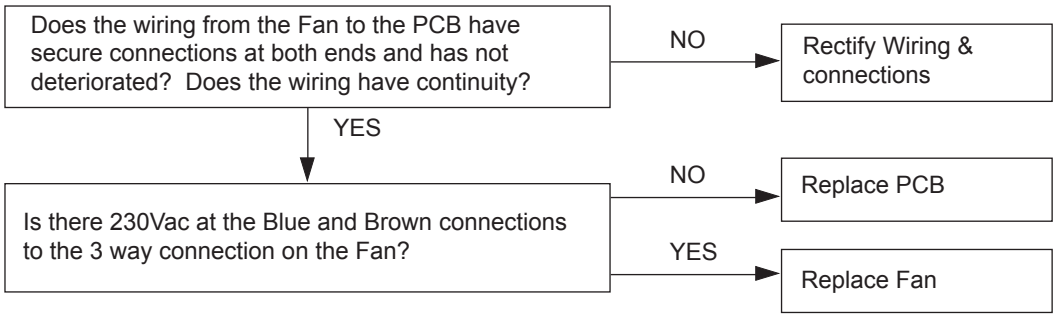

4.8 FLOW THERMISTOR FAULT

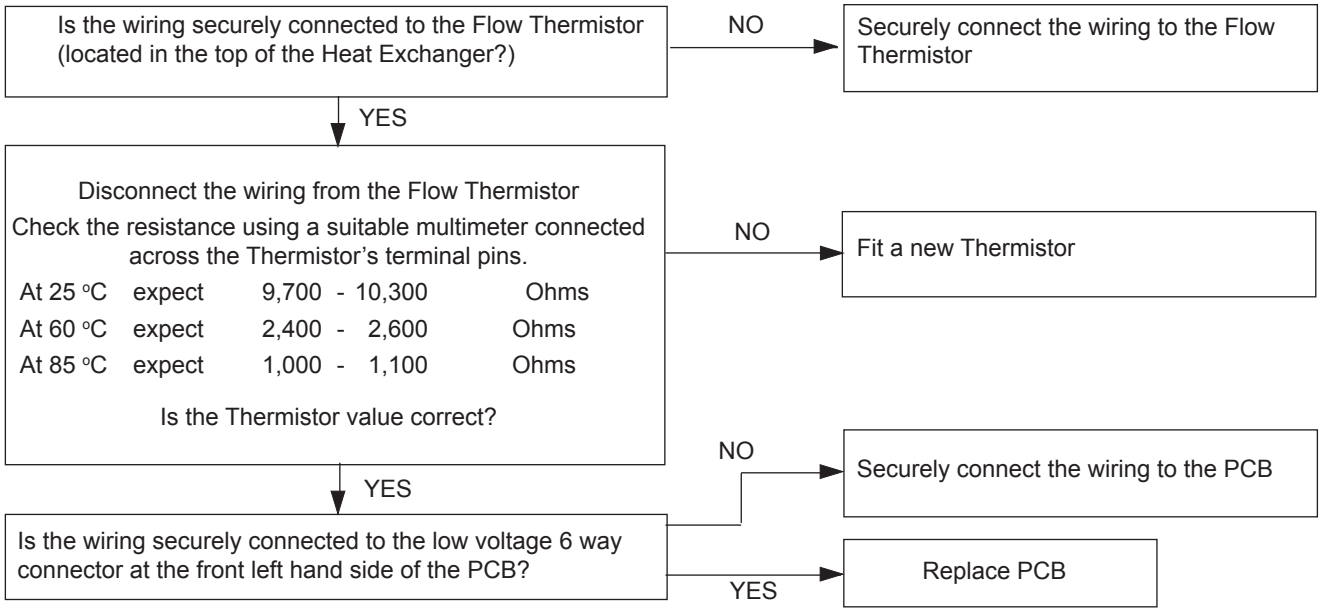

4.9 RETURN THERMISTOR FAULT

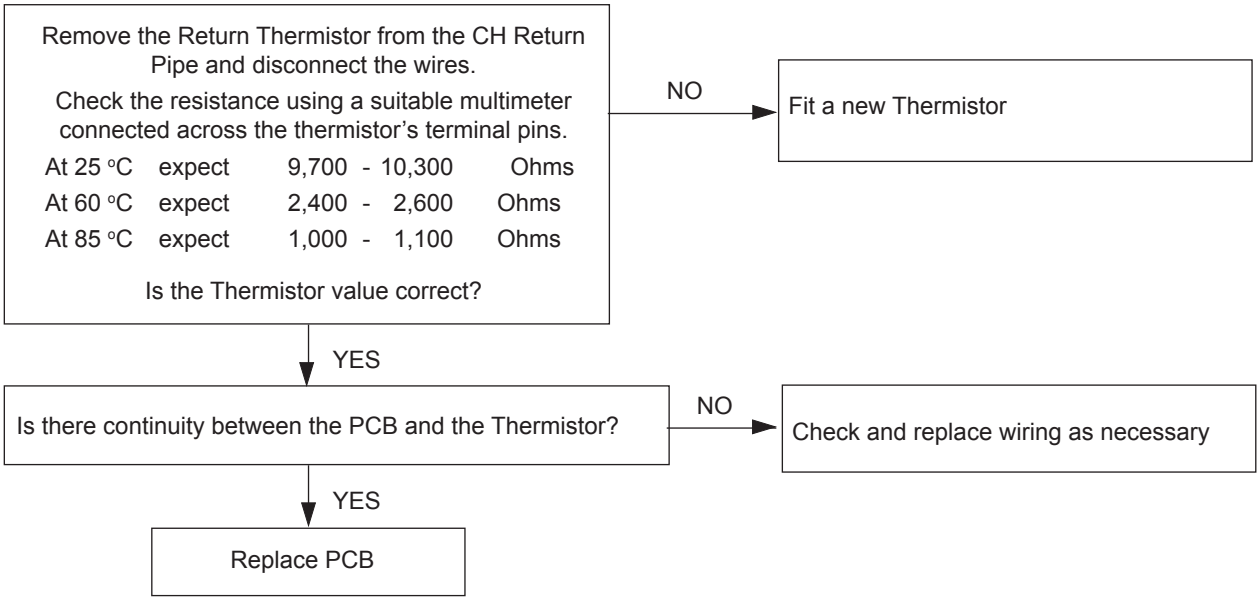

4.10 OUTSIDE SENSOR FAULT

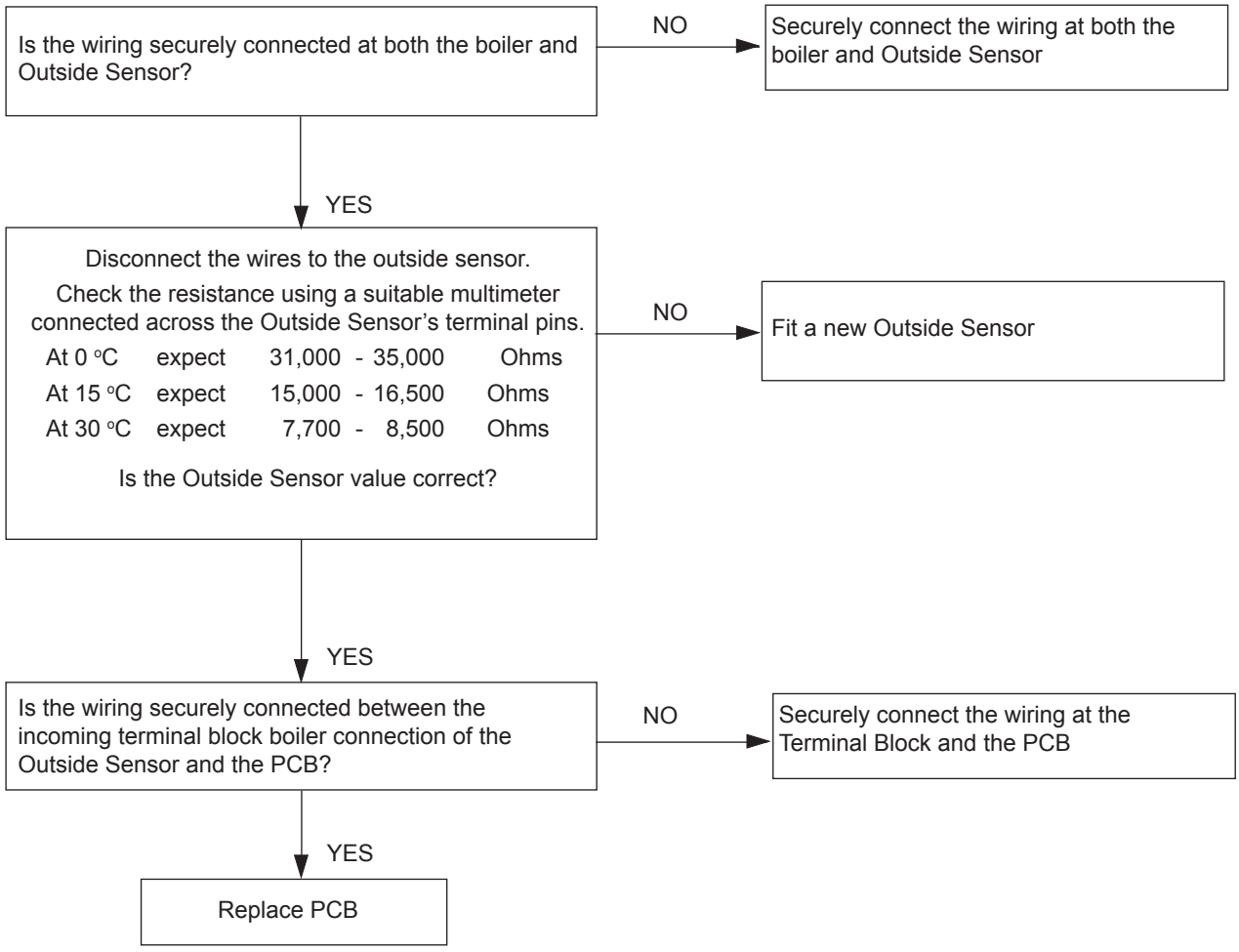

4.11 NO CH OPERATION BUT DHW WORKS OK

Is the mode knob in the Winter position?

NO → Move the mode knob to the Winter position

YES ↓

Are the Timer and the Room Thermostat switched on?

NO → Switch the Timer and Room Thermostat On

YES ↓

Are the Radiator Valves Open?

NO → Open the Radiator Valves

YES ↓

Is there 230Vac at (A)?

NO → There is no Voltage from the Timer/Room Stat. This is not boiler fault. Ensure Voltage is supplied to boiler by rectifying external wiring.

YES ↓

Replace the Divertor Valve

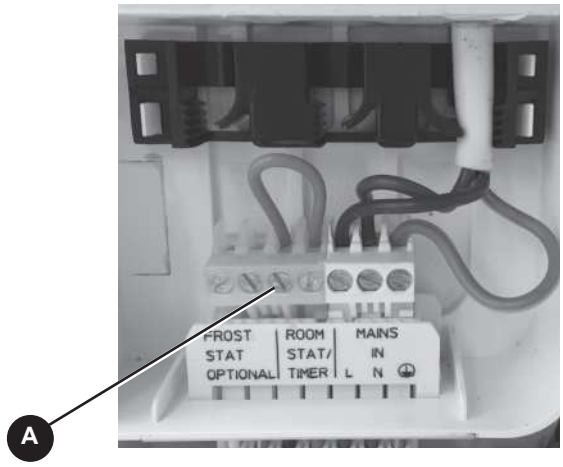

4.12 NO HW BUT CH ON

Does the display show a similar screen to the screen shown?

NO → Is the wiring connected between PCB and DHW sensor?

YES ↓

Are the flow rates correct as per Table 3.

NO → Adjust flow rates to achieve 35º temp rise and check filter is not blocked with debris.

YES ↓

Is the wiring between the PCB and the diverter valve motor connected?

NO → Reconnect wiring or replace wiring harness if no continuity.

YES ↓

Check diverter head fully engaged and clip secured onto waterset.

NO → Re-engage diverter head and secure clip to wateset

YES ↓

Is diverter stuck in the CH position

NO → Replace PCB

YES ↓

Check and replace diverter valve motor head. Is Boiler DHW OK?

NO ↓

Change diverter Valve cartridge - rear section

Is the wiring connected between PCB and DHW sensor?

NO → Re-connect wiring

YES ↓

Remove the turbine, and check for debris in the turbine & filter. Replace turbine if necessary. Is DHW OK?

NO ↓

Replace turbine sensor

4.13 NO DISPLAY

Is there 230Vac to the boiler at L and N?

NO → Supply power to the boiler

YES ↓

Is the wiring from the terminal block to the Main PCB connected securely?

NO → Connect the wiring from the terminal block to the Main PCB securely.

YES ↓

Is the ribbon cable from the main PCB to the User Interface PCB connected securely?

NO → Connect the ribbon from the main PCB to the User Interface PCB securely

YES ↓

Is ribbon cable damaged?

NO → Replace the User Interface PCB

YES ↓

Replace ribbon cable

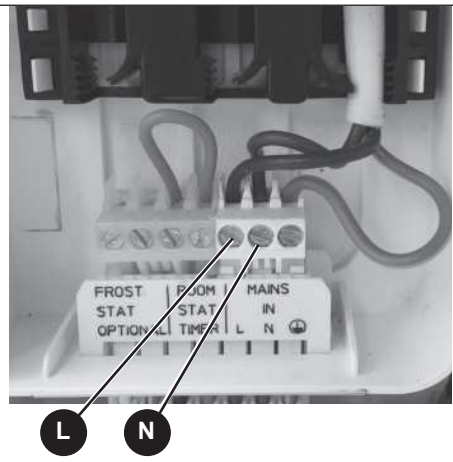

SECTION 5 - SPARE PARTS

When replacing any part on this appliance use only spare parts that you can be assured conform to the safety and performance specification that we require. Do not use reconditioned or copy parts that have not been clearly authorised by Keston. Failure to do so could affect safety or performance of this appliance.

Our Parts team are also available to help with your Keston Spare Parts enquiries on 01482 498665.

When calling, and to ensure we can provide you with the most accurate parts information, please ensure you have the following to hand;

- Boiler Model
- Appliance GC Number
- Boiler Serial Number

IMPORTANT NOTE.

Propane Boilers - *After installation of a conversion kit, and when ordering future spares be sure to quote the serial letter code AAV - which indicates a Propane boiler - and the boilers original serial letter code from the original data plate.*

Code Of Practice

For the installation, commissioning and servicing of domestic heating and hot water products

Benchmark places responsibilities on both manufacturers and installers.* The purpose is to ensure that customers** are provided with the correct equipment for their needs, that it is installed, commissioned and serviced in accordance with the manufacturer's instructions by competent persons and that it meets the requirements of the appropriate Building Regulations. Installers are required to carry out work in accordance with the following:

Standards of Work

- Be competent and qualified to undertake the work required.
- Install, commission, service and use products in accordance with the manufacturer's instructions provided.
- Ensure that where there is responsibility for design work, the installation is correctly sized and fit for purpose.
- Meet the requirements of the appropriate Building Regulations. Where this involves notifiable work be a member of a Competent Persons Scheme or confirm that the customer has notified Local Authority Building Control (LABC), prior to work commencing.
- Complete all relevant sections of the Benchmark Checklist/Service Record when carrying out commissioning or servicing of a product or system.
- Ensure that the product or system is left in a safe condition and, whenever possible, in good working order.
- Highlight to the customer any remedial or improvement work identified during the course of commissioning or servicing work.
- Refer to the manufacturer's helpline where assistance is needed.
- Report product faults and concerns to the manufacturer in a timely manner.

Customer Service

- Show the customer any identity card that is relevant to the work being carried out prior to commencement or on request.
- Give a full and clear explanation/demonstration of the product or system and its operation to the customer.
- Hand over the manufacturer's instructions, including the Benchmark Checklist, to the customer on completion of an installation.
- Obtain the customer's signature, on the Benchmark Checklist, to confirm satisfactory demonstration and receipt of manufacturer's instructions.
- Advise the customer that regular product servicing is needed, in line with manufacturers' recommendations, to ensure that safety and efficiency is maintained.
- Respond promptly to calls from a customer following completion of work, providing advice and assistance by phone and, if necessary, visiting the customer.
- Rectify any installation problems at no cost to the customer during the installer's guarantee period.

benchmark COLLECTIVE MARK
THE MARK OF QUALITY FOR THE INSTALLATION, COMMISSIONING AND SERVICING OF DOMESTIC HEATING AND HOT WATER SYSTEMS

*The use of the word "installer" is not limited to installation itself and covers those carrying out installation, commissioning and/or servicing of heating and hot water products, or the use of supporting products (such as water treatment or test equipment).
**Customer includes householders, landlords and tenants.

© Heating and Hotwater Industry Council (HHIC)

www.centralheating.co.uk

Benchmark Commissioning and Servicing Section

It is a requirement that the boiler is installed and commissioned to the manufacturers instructions and the data fields on the commissioning checklist completed in full.

To instigate the boiler guarantee the boiler needs to be registered with the manufacturer within one month of the installation.

To maintain the boiler guarantee it is essential that the boiler is serviced annually by a Gas Safe registered engineer who has been trained on the boiler installed. The service details should be recorded on the Benchmark Service Interval Record and left with the householder.

benchmark
COLLECTIVE MARK
THE MARK OF QUALITY FOR THE INSTALLATION, COMMISSIONING AND SERVICING OF DOMESTIC HEATING AND HOT WATER SYSTEMS

www.centralheating.co.uk

© Heating and Hotwater Industry Council (HHIC)

GAS BOILER SYSTEM COMMISSIONING CHECKLIST

This Commissioning Checklist is to be completed in full by the competent person who commissioned the boiler as a means of demonstrating compliance with the appropriate Building Regulations and then handed to the customer to keep for future reference.

Failure to install and commission according to the manufacturer's instructions and complete this Benchmark Commissioning Checklist will invalidate the warranty. This does not affect the customer's statutory rights.

Customer name:	Telephone number:
Address:	
Boiler make and model:	
Boiler serial number:	
Commissioned by (PRINT NAME):	Gas Safe register number:
Company name:	Telephone number:
Company address:	
	Commissioning date:
To be completed by the customer on receipt of a Building Regulations Compliance Certificate*	
Building Regulations Notification Number (if applicable):	

CONTROLS (tick the appropriate boxes)				
Time and temperature control to heating	Room thermostat and programmer/timer		Programmable room thermostat	
	Load/weather compensation		Optimum start control	
Time and temperature control to hot water	Cylinder thermostat and programmer/timer		Combination Boiler	
Heating zone valves	Fitted		Not required	
Hot water zone valves	Fitted		Not required	
Thermostatic radiator valves	Fitted		Not required	
Automatic bypass to system	Fitted		Not required	
Boiler interlock			Provided	

ALL SYSTEMS				
The system has been flushed and cleaned in accordance with BS7593 and boiler manufacturer's instructions			Yes	
What system cleaner was used?				
What inhibitor was used?		Quantity		litres
Has a primary water system filter been installed?	Yes		No	

CENTRAL HEATING MODE measure and record:			
Gas rate	m^3/hr	**OR**	ft^3/hr
Burner operating pressure (if applicable)	mbar	**OR** Gas inlet pressure	mbar
Central heating flow temperature			°C
Central heating return temperature			°C

COMBINATION BOILERS ONLY				
Is the installation in a hard water area (above 200ppm)?	Yes		No	
If yes, and if required by the manufacturer, has a water scale reducer been fitted?	Yes		No	
What type of scale reducer has been fitted?				
DOMESTIC HOT WATER MODE Measure and Record:				
Gas rate	m^3/hr	**OR**	ft^3/hr	
Burner operating pressure (at maximum rate)	mbar	**OR** Gas inlet pressure at maximum rate	mbar	
Cold water inlet temperature			°C	
Hot water has been checked at all outlets	Yes		Temperature	°C
Water flow rate			l/min	

CONDENSING BOILERS ONLY		
The condensate drain has been installed in accordance with the manufacturer's instructions and/or BS5546/BS6798	Yes	

ALL INSTALLATIONS						
Record the following:	At max. rate:	CO	ppm	**AND**	CO/CO_2	Ratio
	At min. rate: (where possible)	CO	ppm	**AND**	CO/CO_2	Ratio
The heating and hot water system complies with the appropriate Building Regulations					Yes	
The boiler and associated products have been installed and commissioned in accordance with the manufacturer's instructions					Yes	
The operation of the boiler and system controls have been demonstrated to and understood by the customer					Yes	
The manufacturer's literature, including Benchmark Checklist and Service Record, has been explained and left with the customer					Yes	

Commissioning Engineer's Signature
Customer's Signature
(To confirm satisfactory demonstration and receipt of manufacturer's literature)

* Allinstallations in England and Wales must be notified to Local Authority Building Control (LABC) either directly or through a Competent Persons Scheme. A Building Regulations Compliance Certificate will then be issued to the customer.

benchmark COLLECTIVE MARK
THE MARK OF QUALITY FOR THE INSTALLATION, COMMISSIONING AND SERVICING OF DOMESTIC HEATING AND HOT WATER SYSTEMS

© Heating and Hotwater Industry Council (HHIC)

SERVICE RECORD

It is recommended that your heating system is serviced regularly and that the appropriate Service Interval Record is completed.

Service Provider

Before completing the appropriate Service Record below, please ensure you have carried out the service as described in the manufacturer's instructions. Always use the manufacturer's specified spare part when replacing controls.

SERVICE 01					Date:
Engineer name:					
Company name:					
Telephone No:					
Gas safe register No:					
Record:	At max. rate:	CO	ppm	**AND**	CO_2 %
	At min. rate: (Where Possible)	CO	ppm	**AND**	CO_2 %
Comments:					
Signature					

SERVICE 02					Date:
Engineer name:					
Company name:					
Telephone No:					
Gas safe register No:					
Record:	At max. rate:	CO	ppm	**AND**	CO_2 %
	At min. rate: (Where Possible)	CO	ppm	**AND**	CO_2 %
Comments:					
Signature					

SERVICE 03					Date:
Engineer name:					
Company name:					
Telephone No:					
Gas safe register No:					
Record:	At max. rate:	CO	ppm	**AND**	CO_2 %
	At min. rate: (Where Possible)	CO	ppm	**AND**	CO_2 %
Comments:					
Signature					

SERVICE 04					Date:
Engineer name:					
Company name:					
Telephone No:					
Gas safe register No:					
Record:	At max. rate:	CO	ppm	**AND**	CO_2 %
	At min. rate: (Where Possible)	CO	ppm	**AND**	CO_2 %
Comments:					
Signature					

SERVICE 05					Date:
Engineer name:					
Company name:					
Telephone No:					
Gas safe register No:					
Record:	At max. rate:	CO	ppm	**AND**	CO_2 %
	At min. rate: (Where Possible)	CO	ppm	**AND**	CO_2 %
Comments:					
Signature					

SERVICE 06					Date:
Engineer name:					
Company name:					
Telephone No:					
Gas safe register No:					
Record:	At max. rate:	CO	ppm	**AND**	CO_2 %
	At min. rate: (Where Possible)	CO	ppm	**AND**	CO_2 %
Comments:					
Signature					

SERVICE 07					Date:
Engineer name:					
Company name:					
Telephone No:					
Gas safe register No:					
Record:	At max. rate:	CO	ppm	**AND**	CO_2 %
	At min. rate: (Where Possible)	CO	ppm	**AND**	CO_2 %
Comments:					
Signature					

SERVICE 08					Date:
Engineer name:					
Company name:					
Telephone No:					
Gas safe register No:					
Record:	At max. rate:	CO	ppm	**AND**	CO_2 %
	At min. rate: (Where Possible)	CO	ppm	**AND**	CO_2 %
Comments:					
Signature					

SERVICE 09					Date:
Engineer name:					
Company name:					
Telephone No:					
Gas safe register No:					
Record:	At max. rate:	CO	ppm	**AND**	CO_2 %
	At min. rate: (Where Possible)	CO	ppm	**AND**	CO_2 %
Comments:					
Signature					

SERVICE 10					Date:
Engineer name:					
Company name:					
Telephone No:					
Gas safe register No:					
Record:	At max. rate:	CO	ppm	**AND**	CO_2 %
	At min. rate: (Where Possible)	CO	ppm	**AND**	CO_2 %
Comments:					
Signature					

* Allinstallations in England and Wales must be notified to Local Authority Building Control (LABC) either directly or through a Competent Persons Scheme. A Building Regulations Compliance Certificate will then be issued to the customer.

benchmark COLLECTIVE MARK
THE MARK OF QUALITY FOR THE INSTALLATION, COMMISSIONING AND SERVICING OF DOMESTIC HEATING AND HOT WATER SYSTEMS

© Heating and Hotwater Industry Council (HHIC)

FLOWCHART FOR CO LEVEL AND COMBUSTION RATIO CHECK ON COMMISSIONING A CONDENSING BOILER

Important Preliminary Information on Checks

The air gas ratio valve is factory-set and must not be adjusted DURING COMMISSIONING.

If the boiler requires conversion to operate with a different gas family (e.g. conversion from natural gas to LPG) separate guidance is provided with the conversion kit supplied and this must be followed.

PRIOR TO CO LEVEL AND COMBUSTION RATIO CHECK

The installation instructions must have been followed, gas type verified and gas supply pressure / gas rate checked as required prior to commissioning.

As part of the installation process, ESPECIALLY WHERE A FLUE HAS BEEN FITTED BY PERSONS OTHER THAN THE BOILER INSTALLER, visually check the integrity of the whole flue system to confirm that all components are correctly assembled, fixed and supported. Check that maximum flue lengths have not been exceeded and all guidance has been followed (e.g. Gas Safe Register Technical Bulletin (TB) 008 where chimney/flues are in voids).

The ECGA should be of the correct type, as specified by BS 7967.

Prior to its use, the ECGA should have been maintained and calibrated as specified by the manufacturer. The installer must have the relevant competence for use of the analyser.

Check and zero the analyser IN FRESH AIR in accordance with the analyser manufacturer's instructions.

KEY:

CO = carbon monoxide

CO_2 = carbon dioxide

O2 = oxygen

Combustion Ratio = The CO reading measured in ppm divided by the CO_2 reading first converted to ppm

ppm = parts per million

GS(I&U)R = Gas Safety (Installation and Use) Regulations

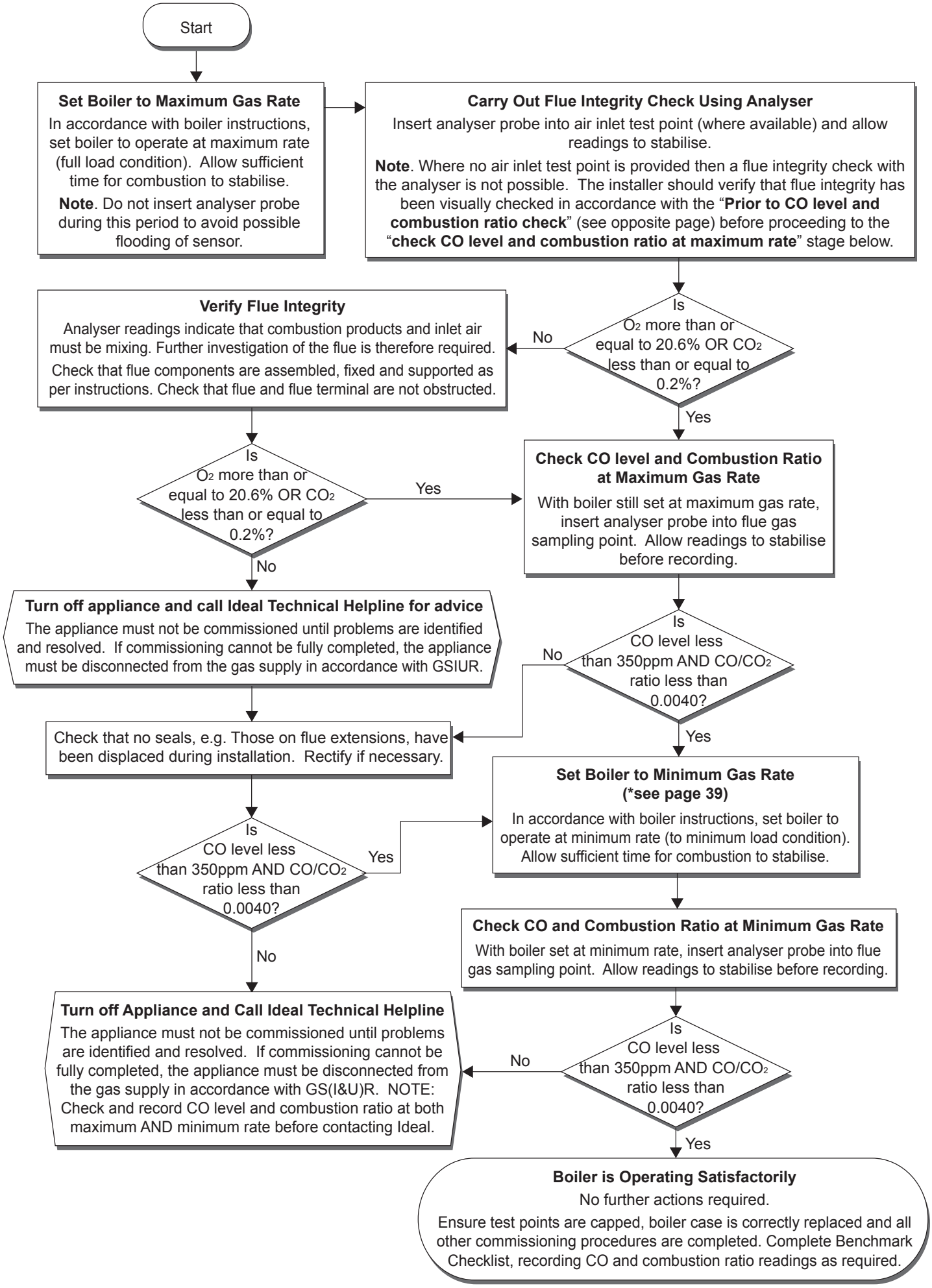
Start
Set Boiler to Maximum Gas Rate
In accordance with boiler instructions, set boiler to operate at maximum rate (full load condition). Allow sufficient time for combustion to stabilise.
Note. Do not insert analyser probe during this period to avoid possible flooding of sensor.
Carry Out Flue Integrity Check Using Analyser
Insert analyser probe into air inlet test point (where available) and allow readings to stabilise.
Note. Where no air inlet test point is provided then a flue integrity check with the analyser is not possible. The installer should verify that flue integrity has been visually checked in accordance with the "Prior to CO level and combustion ratio check" (see opposite page) before proceeding to the "check CO level and combustion ratio at maximum rate" stage below.
Is O2 more than or equal to 20.6% OR CO2 less than or equal to 0.2%?
No
Verify Flue Integrity
Analyser readings indicate that combustion products and inlet air must be mixing. Further investigation of the flue is therefore required.
Check that flue components are assembled, fixed and supported as per instructions. Check that flue and flue terminal are not obstructed.
Yes
Is O2 more than or equal to 20.6% OR CO2 less than or equal to 0.2%?
Yes
No
Check CO level and Combustion Ratio at Maximum Gas Rate
With boiler still set at maximum gas rate, insert analyser probe into flue gas sampling point. Allow readings to stabilise before recording.
Turn off appliance and call Ideal Technical Helpline for advice
The appliance must not be commissioned until problems are identified and resolved. If commissioning cannot be fully completed, the appliance must be disconnected from the gas supply in accordance with GSIUR.
Is CO level less than 350ppm AND CO/CO2 ratio less than 0.0040?
No
Check that no seals, e.g. Those on flue extensions, have been displaced during installation. Rectify if necessary.
Yes
Set Boiler to Minimum Gas Rate (*see page 39)
In accordance with boiler instructions, set boiler to operate at minimum rate (to minimum load condition). Allow sufficient time for combustion to stabilise.
Is CO level less than 350ppm AND CO/CO2 ratio less than 0.0040?
Yes
No
Check CO and Combustion Ratio at Minimum Gas Rate
With boiler set at minimum rate, insert analyser probe into flue gas sampling point. Allow readings to stabilise before recording.
Turn off Appliance and Call Ideal Technical Helpline
The appliance must not be commissioned until problems are identified and resolved. If commissioning cannot be fully completed, the appliance must be disconnected from the gas supply in accordance with GS(I&U)R. NOTE: Check and record CO level and combustion ratio at both maximum AND minimum rate before contacting Ideal.
Is CO level less than 350ppm AND CO/CO2 ratio less than 0.0040?
No
Yes
Boiler is Operating Satisfactorily
No further actions required.
Ensure test points are capped, boiler case is correctly replaced and all other commissioning procedures are completed. Complete Benchmark Checklist, recording CO and combustion ratio readings as required.

NOTES

NOTES

NOTES

NOTES

NOTES

NOTES

Keston Heating pursues a policy of continuing improvement in the design and performance of its products.
The right is therefore reserved to vary specification without notice.

Keston Heating, PO Box 103, National Avenue, Kingston Upon Hull, HU5 4JN
Tel 01482 443005 Fax 01482 467133

Keston Helpline: 01482 443005
www.keston.co.uk

PART OF GROUPE ATLANTIC UK & ROI DIVISION

Keston
EVERYTHING IS POSSIBLE