Please leave these instructions with the user

MAIN

MULTIPOINT FF
Room Sealed Fan-Assisted Water Heater

User Operating, Installation and Servicing Instructions

6 720 607 160 GB (06.04) AL

Natural Gas

Main Multipoint FF
G.C. No 52-467-02

This appliance conforms to European Standard EN 26.

Type test for purpose certified by Notified Body CE-0087.

Product/Production certified by Notified Body CE-0464.
For GB / IE only.

Care must be taken when lifting and handling this appliance, seek assistance where appropriate. Protective equipement (e.g. gloves) should be warn as necessary.

User information

Your Main Multipoint FF is designed to meet all relevant standards.

Main provide a 12 month guarantee on the appliance. The guarantee operates from the date installation is completed for the customer who is the original owner.

Any component or part which becomes defective during the guarantee period as a result of faulty workmanship or materials whilst in normal use will be repaired or replaced free of charge.

Contents

Section		page
1.	User's operating instructions	4
2.	General layout	5
3.	Technical Data	6
4.	Dimensions and fixings	7
5.	General inormation	8
6.	Installation Regulations	8
7.	Siting the Appliance	9
8.	Siting the Flue Terminal	10
9.	Air supply	11
10.	Gas supply	11
11.	Electrical	13
12.	Installation	13
13.	Commissioning	18
14.	Inspection and Servicing	19
15.	Replacement of parts	22
16.	Fault Finding	24
17.	Short Parts List	25
18.	Notes	26

1. User's Operating Instructions

Switching on and off:

On

1. Turn the main switch to position **I**.

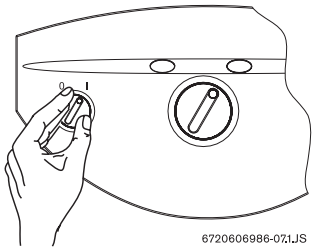

Off

1. Turn the main switch to position **0**.

Water temperature control:

1. Turn the control to the desired temperature.

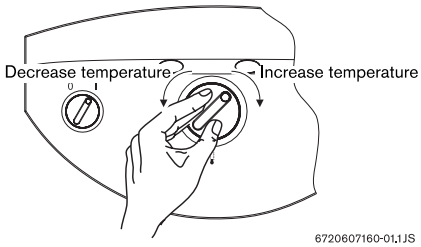

The hot water temperature is set by the control position.

Turn the control clockwise to increase the temperature and anticlockwise to decrease.

When the control is set at the maximum position the highest water temperature is achieved by controlling the flow at the tap.

Fault indication:

The appliance incorporates a fault indication system.
Fault indication is shown by a red light on the reset button.
If pressing the reset button does not restart the appliance, consult your installer.

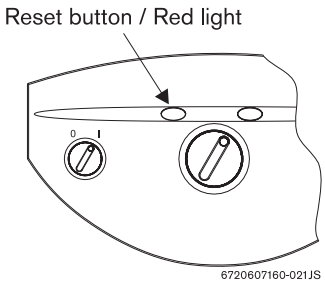

Note: if the appliance is to be left unused in an unheated area during cold weather the electricity, gas and water supplies should be isolated and the system drained.
Your installer will be able to advise you.

Appliance components

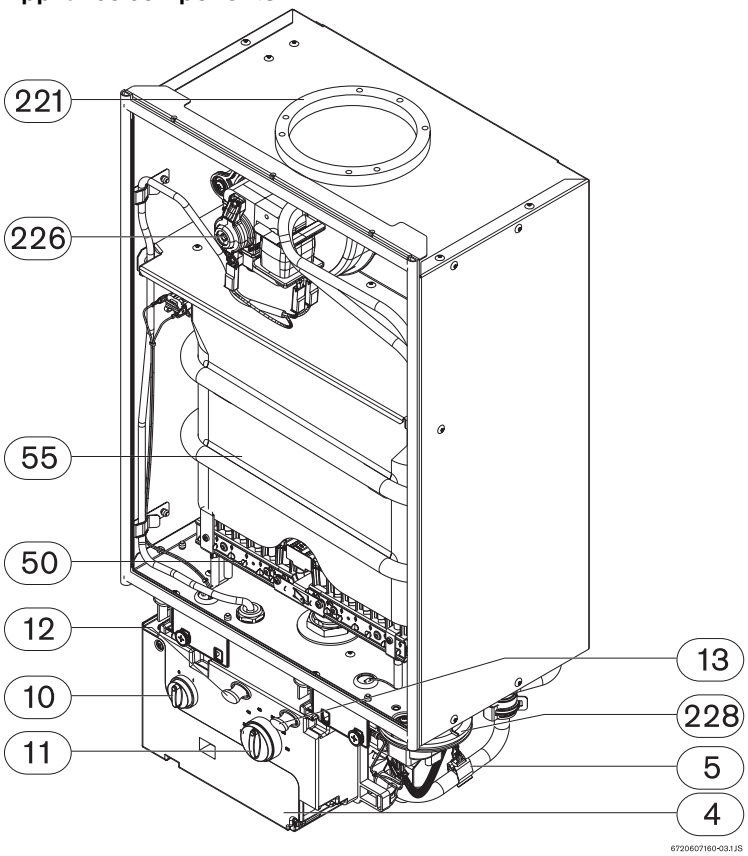

Fig. 3

Appliance water flow diagram.

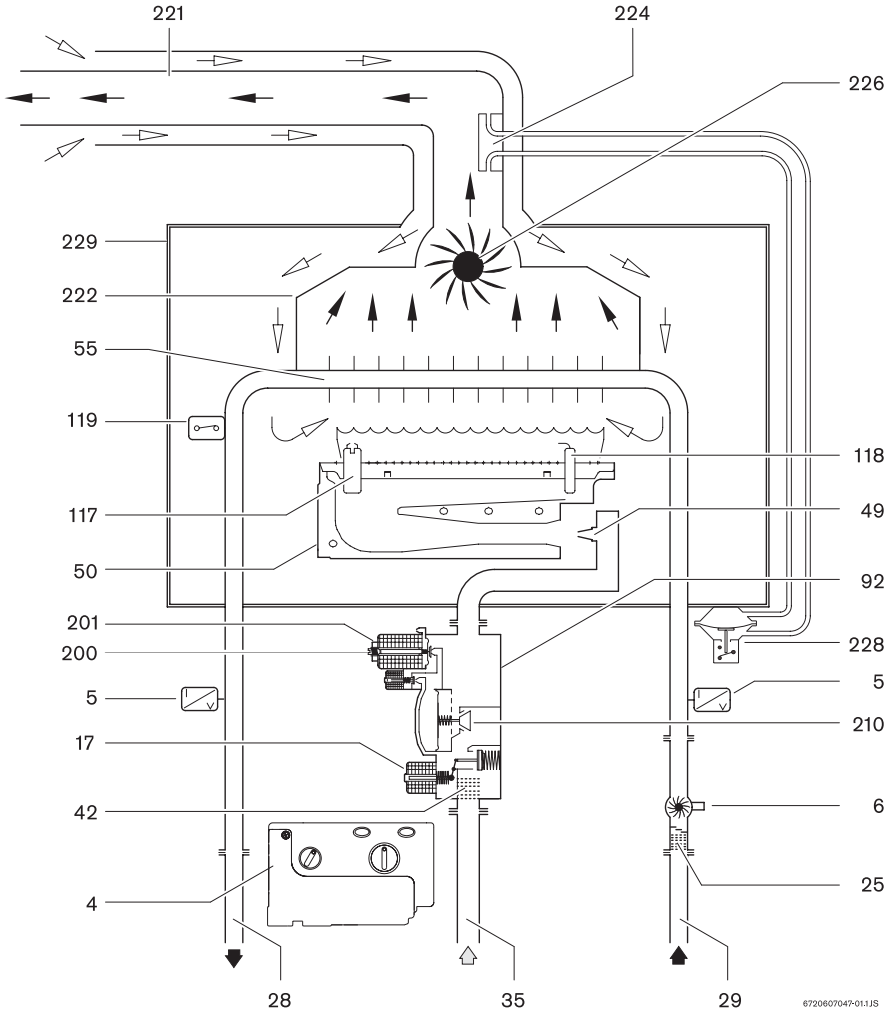

Fig. 4

4 Electronic control box
5 Heat sensor
6 Water flow sensor
10 Main switch
11 Temperature control
12 Reset button
13 Burner Indicator Button
17 Safety solenoid EV1
25 Water filter
28 Hot water pipe
29 Cold water pipe
35 Gas inlet pipe
42 Gas filter
49 Injector
50 Burner
55 Heat exchanger
92 Gas valve
117 Ignition electrode
118 Sensing electrode
119 Temperature limit stat
200 Minimum gas flow adjustment screw
201 Maximum gas flow adjuster
210 Main valve
221 Flue support ring
222 Exhaust gas collector
224 Flow sensor
226 Fan
228 Pressure switch
229 Sealed box

The appliance and flue components are packed in separate cartons.
The appliance is for use with Natural Gas only.
The Installation notes in these Instructions, particularly those regarding Maximum Flue Lengths and Configuration Options, take precedence over any universal instructions included in flue component packs.

TABLE 1 - GENERAL

	Natural Gas
Gas category	I_{2H}
Appliance Type	C_{12}, C_{32}
Minimum rated output	10 kW
Maximum rated output	23.8 kW
Rated input (Net)	27 kW
Gas rate (CV 34 MJ/m^3)	2.9 m^3/hr
Inlet pressure	20 mbar
Number of injectors	14
Injector diameter	1.20 mm
Injector marking	120
Burner pressure (max)	12.7 mbar
Burner pressure (min)	2.5 mbar
Height	700 mm
Width	388 mm
Depth	220 mm
Dry weight	20 kg
Gas connection	15mm Copper
Hot/cold water connections	15mm Copper
Electrical protection	IPX4D

TABLE 2 - FLUE DETAILS

Wall hole size	110 mm Diameter
Standard Horizontal Flue Kit 490mm wall thickness rear outlet 400mm wall thickness side outlet	Sales Code 430183
Horizontal Flue Kit 680mm wall thickness rear outlet 590mm wall thickness side outlet	Sales Code 430184
Flue Extension 1m	Sales Code B4286
90° Bend Kit	Sales Code 31/19034
135° Bend Kit	Sales Code 31/19035
Telescopic Flue In Line Elbow Adaptor	Sales Code 430174
Vertical Adaptor	Sales Code 238014
Concentric Vertical Flue Kit	Sales Code 238015
Flat roof flashing kit	Sales Code 31/19040
Pitched roof flashing kit	Sales Code 31/19041
Wall liner / internal flue fixing kit	Sales Code 238012
Terminal guard	Sales Code 205792

TABLE 3 - PERFORMANCE

Maximum cold water supply inlet pressure	12 bar
Minimum cold water supply inlet pressure to operate the appliance	0.3 bar
Domestic hot water delivery with temperature control knob fully anticlockwise	4 to 14 litres/minute at 25°C temperature rise
Domestic hot water delivery with temperature control knob fully clockwise	3 to 6 litres/minute at 55°C temperature rise

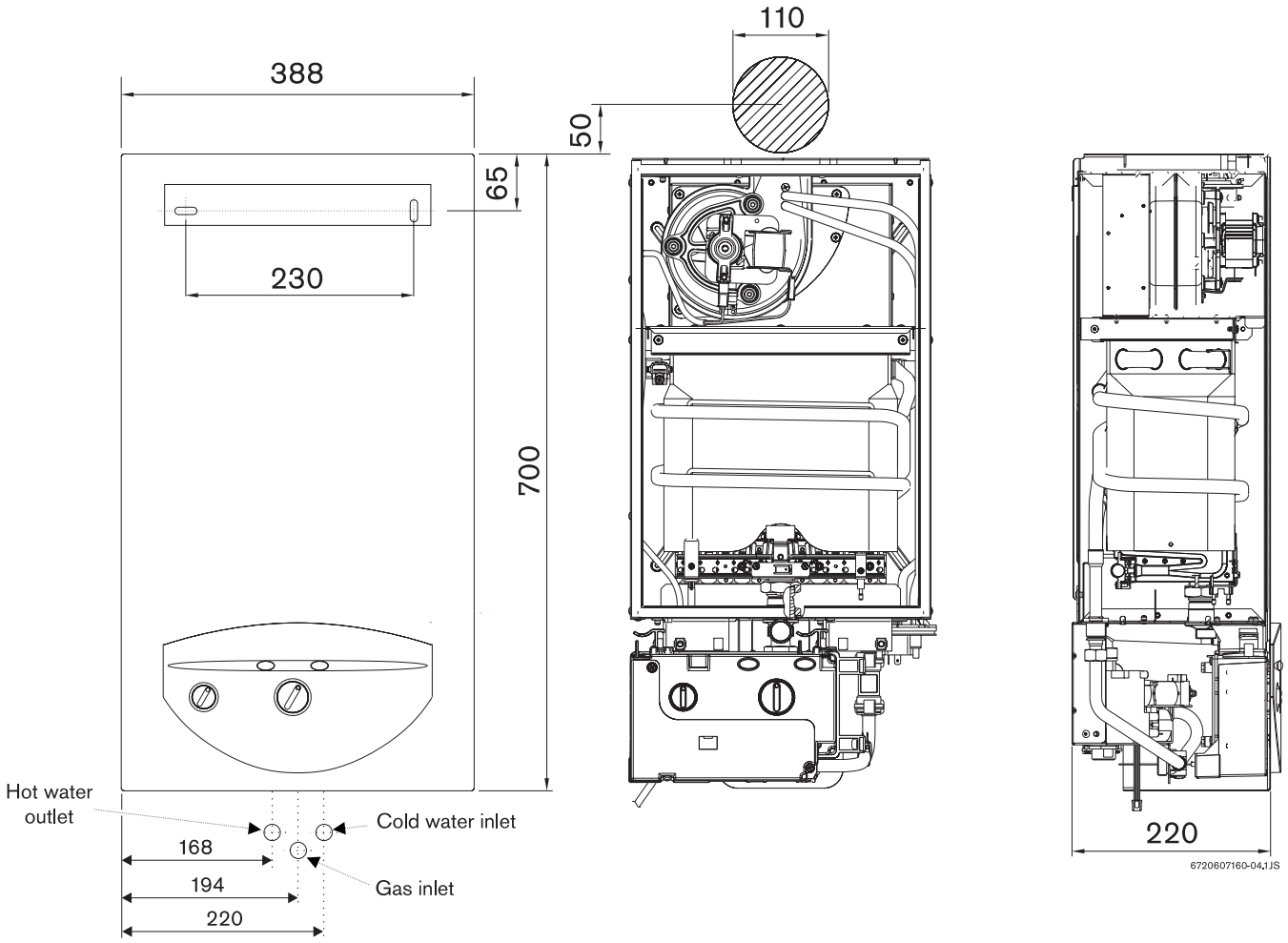
388
110
50
65
230
700
Hot water outlet
Cold water inlet
168
194
220
Gas inlet
220
6720607160-04.1JS

Fig. 5

5. General Information

5.1 GENERAL INSTALLATION

If the appliance is to be fitted into a compartment, the compartment must conform to the requiremens of BS 6798.
Do not place anything on top of the appliance.
The clearances specified for servicing must be maintained.

5.2 SHOWERS

If a shower control is supplied from the appliance it should be of the thermostatic or pressure balanced type. Thermostatic type shower valves provide the best comfort and guard against water at too high a temperature. Existing controls may not be suitable - refer to the shower valve manufacturer.

6. Installation Regulations

6.1 Warning - Check the information on the data plate is compatible with local conditions.

The installation must be carried out by a CORGI Registered Installer or other registered competent person and be in accordance with the relevant requirements of the current Gas Safety (Installation and Use) Regulations, the building regulations (Scotland) (Consolidation), the local building regulations, the current I.E.E Wiring Regulations and the bye laws of the local water undertaking.
Where no specific instruction is given, reference should be made to the relevant British Standard Code of Practice. For Ireland, install in accordance with IS 813 “Installation of Gas Appliances”.

6.2 B.S Codes of Practice

Standard	Scope
BS 6891	Gas Installation
BS 5546	Installation of water supplies for domestic purposes
BS 6798	Installation of gas fired hot water boilers
BS 5440 Part1	Flues
BS 5440 Part2	Ventilation

WARNING - The addition of anything that may interfere with the normal operation of the appliance without the express written permission of Baxi Potterton could invalidate the appliance warranty and infringe the Gas Safety (Installation and Use) Regulations.

7. Siting the Appliance

7.1 The appliance is NOT suitable for external installation.

7.2 The appliance is NOT suitable for SEDUCT application.

7.3 The appliance does not require any special wall protection.

7.4 The wall must be capable of supporting the weight of the appliance. See Technical Data – Table 1.

7.5 If the appliance is to be fitted in a timber framed building, refer to the **Institute of Gas Engineers,** "Guide for gas installations in timber framed housing" **IGE/UP/7**.

7.6 The following advisable clearances must be available for installation and for servicing:

Above case	120 mm
In front	600 mm
Below	50 mm
Right hand side	10 mm
Left hand side	10 mm

Table 4

7.7 The minimum clearances required for Operation are:

Above case	120 mm
In front	60 mm
Below	50 mm
Right hand side	10 mm
Left hand side	10 mm

Table 5

7.8 The appliance can be installed in a cupboard used for airing clothes provided that requirements of BS 6798 and BS 5440:2 are strictly followed. See section 9 for further detail.

7.9 The airing space must be separated from the appliance space by a perforated non-combustible partition. Expanded metal or rigid wire mesh are acceptable provided that the major dimension is less than 13 mm.
See BS 6798

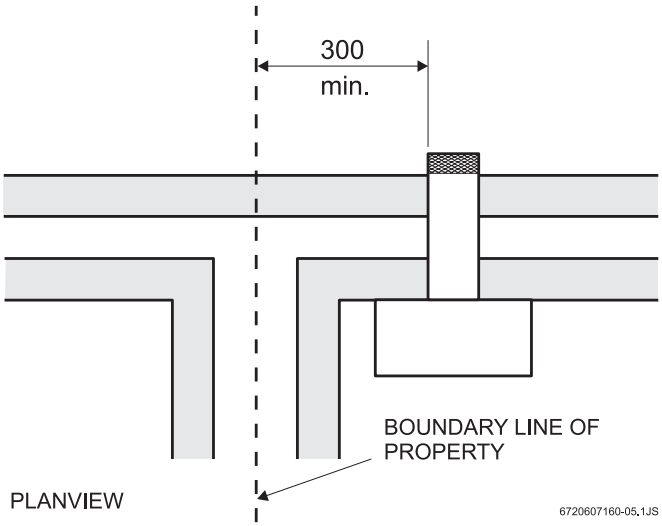

Fig. 6

8. Siting the Flue Terminal

See Fig. 7.

8.1 The flue must be installed as specified in BS 5440:Part 1.

8.2 The terminal must not cause an obstruction nor the discharge cause a nuisance.

8.3 If the terminal is fitted within 1000 mm of a plastic or painted gutter or within 500 mm of painted eaves then an aluminium shield at least 1000 mm long should be fitted to the underside of the gutter or painted surface.

8.4 If a terminal is fitted less than 2 metres above a surface to which persons have access then a guard must be fitted.

8.5 The terminal guard must be evenly spaced about the flue terminal and fixed to the wall using plated screws.

8.6 In certain weather conditions a terminal may plume when the appliance is operated. Siting where this could cause a nuisance should be avoided.

8.7 Take care to ensure that combustion products do not enter ventilated roof voids.

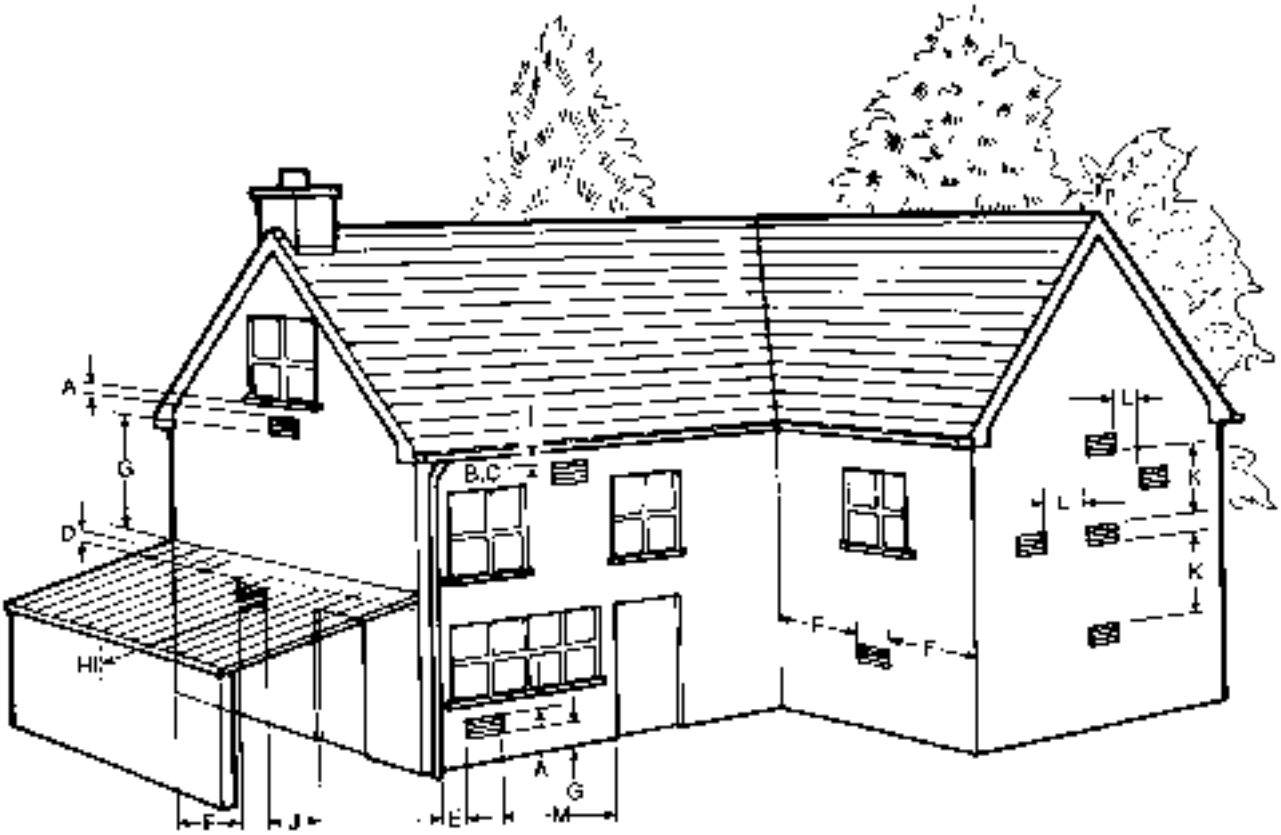

TERMINAL POSITION	MIN. DIST.	TERMINAL POSITION	MIN. DIS.
A - directly below an openable window or other opening e.g. air brick.	300 mm	I - From a terminal facing a terminal.	1200 mm
B - Below gutters, soils pipes or drain pipes.	75 mm	J - From an opening in a car port (e.g. door window) into dwelling.	1200 mm
C - Below eaves.	200 mm	K - Vertically from a terminal on the same wall.	1500 mm
D - Below balconies or car port roof.	200 mm	L - Horizontally from a terminal on the same wall.	300 mm
E - From vertical drain pipes and soil pipes.	150 mm	M - From door, window or air vent	300 mm
F - From internal or external corners.	300 mm		
G - Above ground, roof or balcony level.	300 mm		
H - From a surface facing a terminal.	600 mm		

Fig. 7 - Siting of the flue terminal

9. Air Supply

9.1 The appliance does not require a separate vent for combustion air.

9.2 The appliance may be installed in an unvented compartment.

9.3 There must be sufficient clearance around the appliance to allow proper circulation of air. The clearances required for operation will normally be adequate.

9.4 Refer to BS 6798 and BS5440:2 for additional information.

10. Gas Supply

10.1 The gas installation should be in accordance with BS 6891.

10.2 The connection to the appliance is 15mm compression via the gas isolation valve supplied.

10.3 Ensure that the pipework from the meter to the appliance is of adequate size. If the appliance gas rate cannot be achieved, the specified hot water conditions will not be reached.

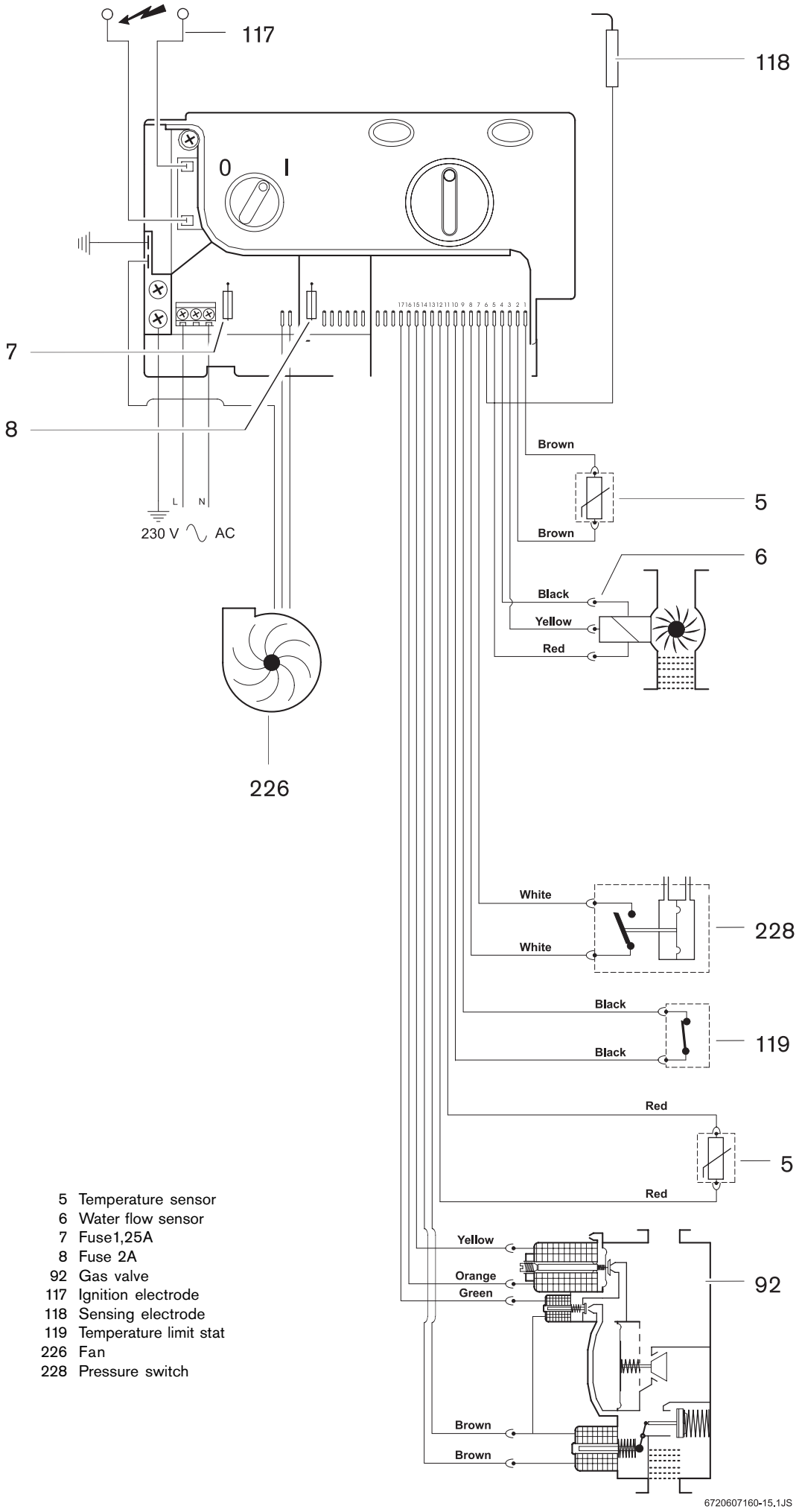

5 Temperature sensor
6 Water flow sensor
7 Fuse1,25A
8 Fuse 2A
92 Gas valve
117 Ignition electrode
118 Sensing electrode
119 Temperature limit stat
226 Fan
228 Pressure switch

Fig. 8

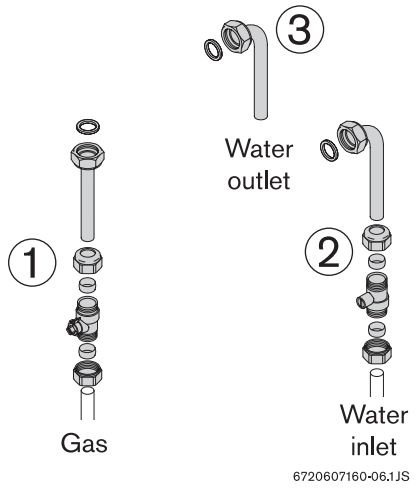

Fig. 9

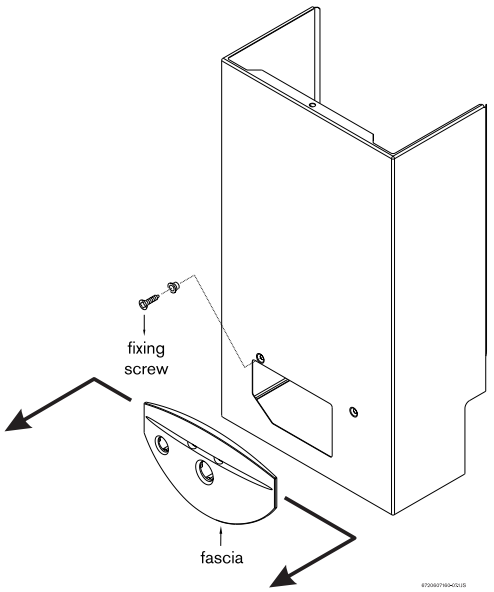

Fig. 10

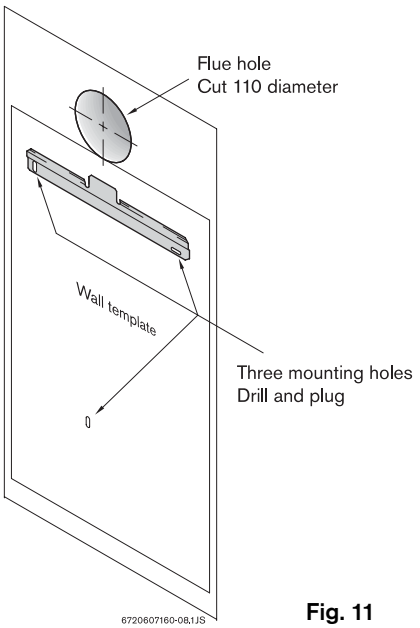

Fig. 11

11. Electrical

See Fig. 8.

11.1 MAINS SUPPLY.
230 V ~, 50 Hz, 65 watts.

11.2 It must be possible to completely isolate the appliance.

11.3 The following connection alternatives must be used: A 3 amp fused three-pin plug and unswitched shuttered socket outlet (both complying with the requirements of BS 1363) or a double pole isolator with a contact separation of 3mm in all poles and supplying the appliance and controls only.

11.4 The appliance must be earthed.

11.5 Mains Cable. 0.75mm^2 (24 x 0.20mm) to BS 6500 Table 16.

11.6 The wiring between the appliance and the electrical supply must comply with current IEE Wiring Regulations and any local regulations which apply.

11.7 SAFETY CHECK.
After installation or in the event of an electrical fault the electrical system shall be checked for short circuits, fuse failure, incorrect polarity of connections, earth continuity and resistance to earth.

12. Installation

The installation must be carried out by a competent person.

12.1 INITIAL PREPARATION

12.1.1 Unpack the appliance and take care to remove the fascia and the installation kit which are located on the top and on the bottom of the polystyrene packing. Remove the White painted Flue Elbow inclusive of sealing rings. The installation kit (Fig. 9) consists of the following:

Gas inlet:
1x Flanged Copper Pipe, Compression Nut, fibre washer
1x Isolation valve, 2 x Compression nuts and Olives

Water Inlet:
1x Copper inlet elbow, Compression Nut, fibre washer
1x Isolation valve, 2 x Compression nuts and Olives

Water Outlet:
1x Copper inlet elbow Compression nut, Fibre washer

12.1.2 Lay the appliance on its back, unfasten the two retaining screws and lift the case clear (Fig. 10).
Place the paper mounting template in the required location on the wall and mark the positions of the flue and the three mounting holes (Fig. 11).
Cut the flue hole and drill and plug the mounting holes. Fix the wall mounting bracket, hang the appliance and secure to the wall through the hole located in the valve mounting bracket. To increase access to this area of the appliance the control box may be temporarily re positioned, depress the two curved finger tab latches on top of the control box and withdraw forward. Use the integral moulded hooks to hang the control from the combustion box.

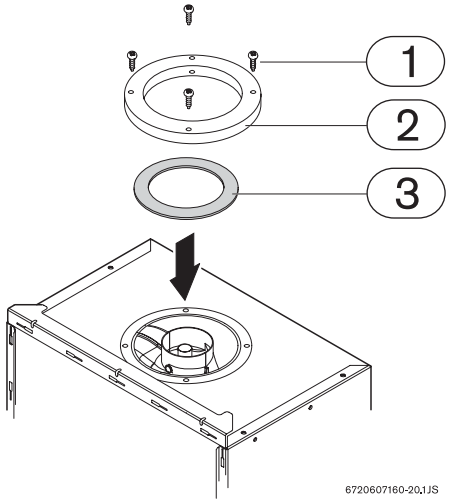

Fig. 12

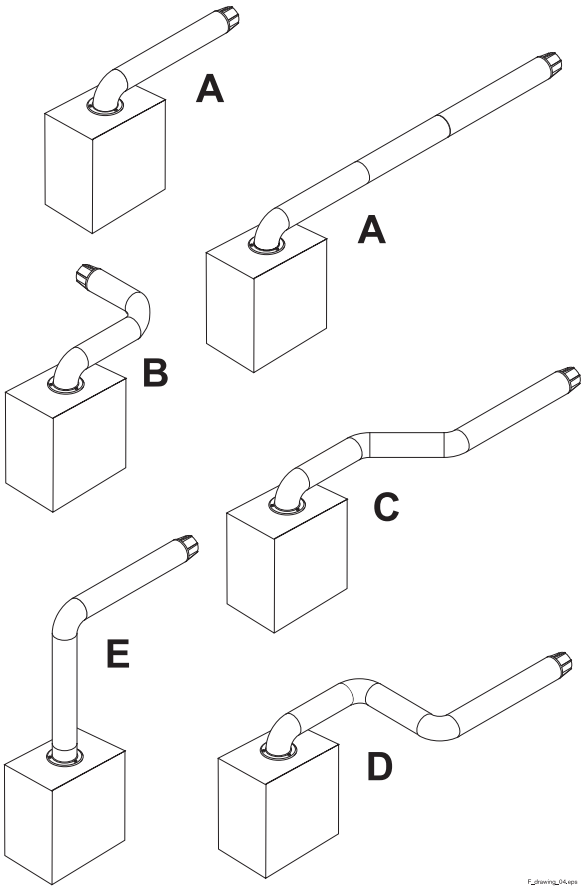

Fig. 13 - Horizontal Flue Applications (see Fig. 17 for Vertical)

12.2 FLUE RESTRICTION

The Installation notes in these Instructions, particularly those regarding Maximum Flue Lengths and Configuration Options, take precedence over any universal instructions included in flue component packs.

To ensure the correct operation of the appliance, certain flue lengths require one of two flue restrictor rings to be fitted to the air inlet. (Fig. 12).

Restrictor requirements for the horizontal and vertical flue configurations shown in Figures13 and 17 are as per tables 6 and 7 respectively.

Horizontal configuration		Flue length	Restrictor Diameter
Configuration A	White Flue Elbow only – no additional bends	Up to 2.0 m	86
		2.0 m – 4.0 m Max	None
Configuration E	Direct vertical rise from the appliance: Vertical Adapter + 1 x 90 degree bend	Up to 2.0 m	86
		2.0 m – 3.5 m Max	None

Table 6

Vertical configuration		Flue length	Restrictor Diameter
Configuration A	No additional bends Straight vertical	Up to 4.0 m Max	83
Configuration B	2 x 45 degree bends	Up to 4.0 m Max	83
Configuration C	Direct vertical rise from the appliance: Vertical Adapter + 2 x 90 degree bend	Up to 2.5 m	83
		2.5 m – 4.0 m Max	None

Table 7

12.2.1 Restrictor Ring Installation.

Unfasten the fixing screws (Fig. 12, pos. 1) securing the flue support ring (Fig. 12, pos. 2).
Place the restrictor ring (Fig. 12, pos. 3) between the flue support ring and the appliance sealed box, align the holes and re secure.

12.3 FITTING A HORIZONTAL FLUE

Possible flue configurations are as per Fig 13.
The concentric horizontal flue system has an inner flue tube diameter of 60 mm and an outer air duct diameter of 100 mm.
Standard horizontal flue terminal kits and flue extension components are detailed in Section 3, Page 6, Table 2 - Flue Details.
The Maximum and Minimum flue lengths available for horizontal configurations are as per table 8.

Horizontal configuration		Flue length	Restrictor
Configuration A	White flue elbow only – no additional bends	4.0 m Max	Table 6
Configuration B	White Flue Elbow + 1 x 90 degree bend	2.2 m Max	None required
Configuration C	White Flue Elbow + 2x 45 degree bends	2.5 m Max	None required
Configuration D	White Flue Elbow + 2x 90 degree bends	1.8 m Max	None required
Configuration E	Direct vertical rise from the appliance: Vertical Adapter + 1 x 90 degree bend	3.5 m Max	Table 6
Minimum flue length: Rear flue, 230mm wall thickness.		0.29 m Min	

Table 8

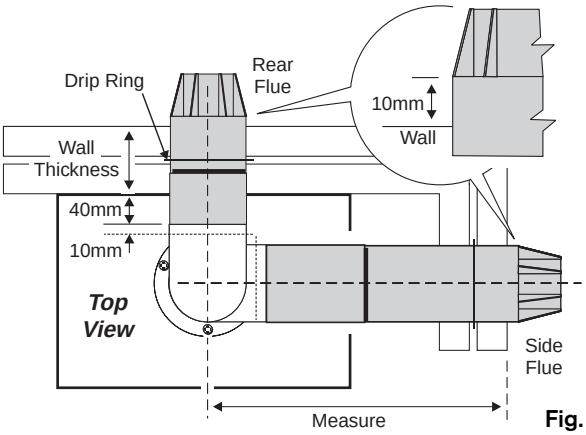

Fig. 14

SET FOR REAR FLUE APPLICATION

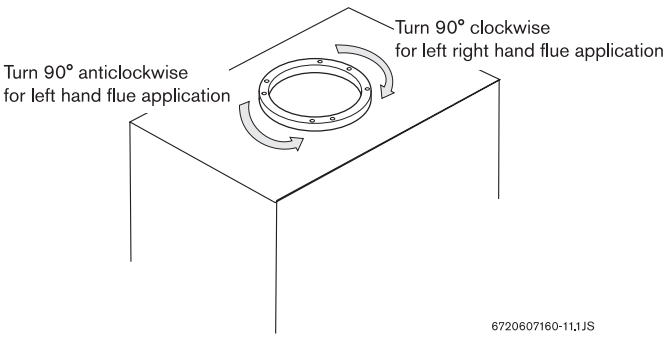

Fig. 15

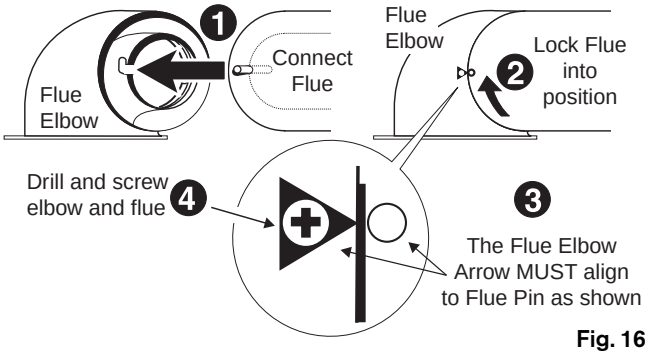

Fig. 16

12.3.1 Standard Telescopic Flue Installation:

Determine appropriate flue length (Fig. 14)

Rear Flue Application - Measure wall thickness, add 60mm.

Side flue application – Measure distance from outer face of wall to centre line of appliance, deduct 55mm.

Set the Telescopic flue tubes to the length determined.
Drill through the pilot hole in the outer duct and secure with the self tapping screw provided. Wrap tape around joint on the outer duct to seal the flue, slide the drip ring in position to coincide with the wall cavity.
Slide flue through the hole in wall until it stops against the bayonet pin.

For side flue Applications – re orient flue support ring on top of appliance: (Fig. 15) Unfasten Flue Support Ring (x 4 screws). Turn ring 90 degrees to left or right as appropriate. Re secure.

Position the white painted Flue Elbow onto the Flue Support Ring ensuring the Silicone Seal engages over the Fan Outlet, secure the Elbow with 3 off screws provided.

Slide the Flue forward from the wall until it engages in the white painted elbow's bayonet connection, twist anticlockwise to lock. (Fig. 16)
Drill through the pilot hole in the white flue elbow and lock the flue in position with self tapping screw provided.
Make good the opening around the flue.

12.3.2 Extended Horizontal Flue Installation:

The flue may be extended to the maximum configuration lengths shown in Table 8 with the application of 1m extension kits, 45 and 90 degree Elbows and a Telescopic Flue In Line Elbow Adapter. In all configurations the first section of Standard Horizontal Flue is located in the white painted Flue Elbow, the second section terminates the flue after the extension components.
The 1m extensions can be cut to length as required.

Extended Horizontal flue with direct vertical rise:
The flue may be extended with a direct vertical rise from the appliance with the application of a Vertical Flue Adapter, 1m extension kits, 90 degree elbow and a telescopic flue in line elbow adapter. The maximum flue length for this configuration is as per table 8.

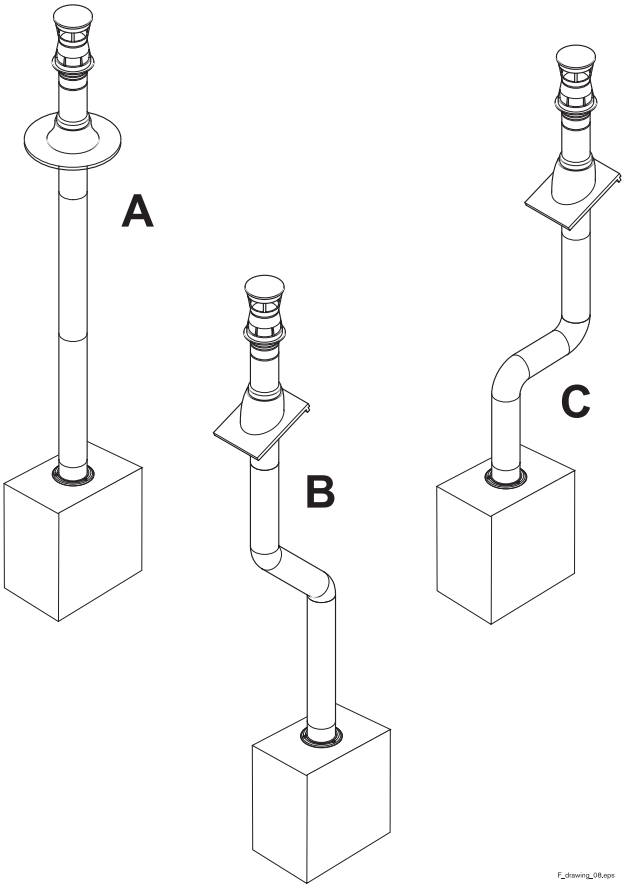

Fig. 17

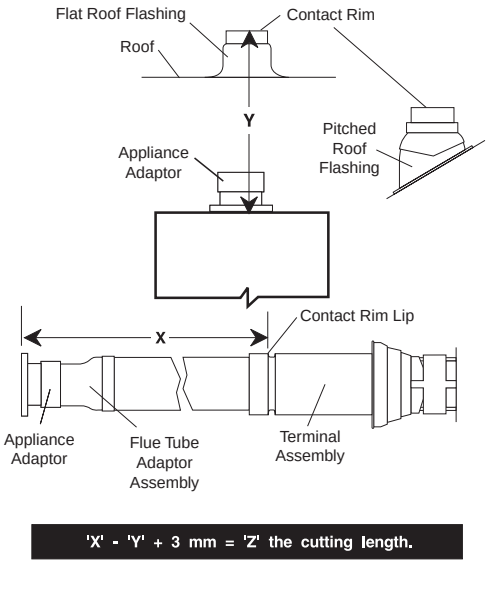

Fig. 18

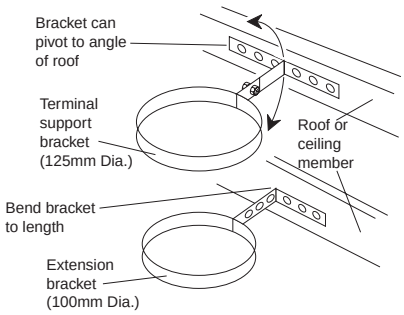

Fig. 19

12.4 FITTING A VERTICAL FLUE

Possible configurations of flue are as per Fig. 17.
Vertical flue kits and flue extension components are detailed in Section 3, Page 6, Table 2 - Flue Details.
For vertical application the white painted elbow is discarded.
The Maximum and Minimum flue lengths available for vertical configurations are as per table 9.

Vertical configuration		Flue length	Restrictor
Configuration A	No additional bends Straight vertical	4.0 m Max	Table 7
Configuration B	2 x 45 degree bends	4.0 m Max	Table 7
Configuration C	2 x 90 degree bend	4.0 m Max	Table 7
Minimum flue length:		1.4 m Min	

Table 9

12.4.1 Standard Vertical installation:

Secure the flashing kit to the roof.
Refer to Fig. 18.
Measure the distance from the contact rim on the flashing kit to the flue support ring on top of the boiler.

This is dimension ‘Y’.

Lay the Terminal Assembly flat and loosely connect the Flue Tube Adaptor Assembly and the Appliance Adaptor.
Measure the overall length from the contact rim lip to the base of the adaptor.
This is dimension ‘X’.
Subtract dimension ‘Y’ (actual) from ‘X’ (uncut), add 3mm, this will give the cutting length ‘Z’.
Take the assembly apart and shorten the inner and outer tubes by dimension ‘Z’. Remove any burrs.

Fit the Appliance Adaptor to the top of the appliance using 3 screws provided.
Slide the Flue Tube Assembly onto the Appliance Adaptor.
From the roof, slide the Terminal Assembly through the flashing kit.
From the appliance side, position the terminal clamp bracket and loosely secure to the roof. Fig. 19.
Locate the base of the Terminal Assembly into the Flue Tube Adaptor Assembly From the roof, ensure the contact rim of the flashing kit has slid up inside the outer tube of the Terminal Assembly.
Secure the Terminal Assembly to the Flue Adaptor Assembly and Flue Adaptor Assembly to the Appliance Adaptor. Drill (2mm drill) through the pilot holes and secure using the screws provided.
Fully secure the Terminal clamp bracket.
Tape around both joints to give an air tight seal.
Make good around the flashing kit.

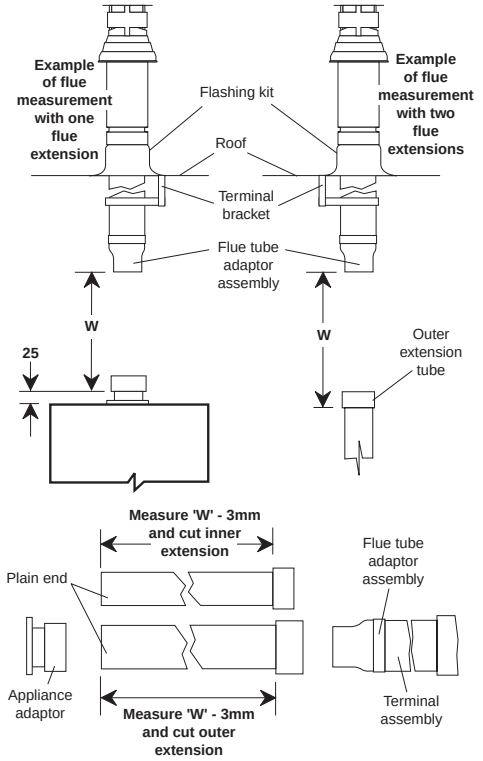

Fig. 20

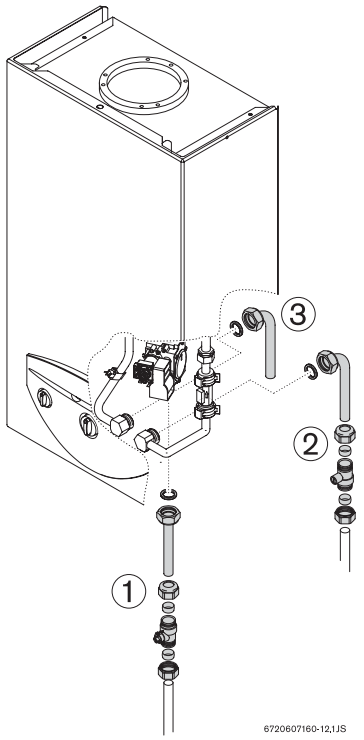

Fig. 21

12.4.2 Extended Vertical Installation

Vertical flue lengths may be extended to the limits as stated in Table 9 using standard 1m extension kits and 45 and 90 degree elbows.
Secure the Flashing kit to the roof.
Refer to Fig. 20.
From the roof, slide the Terminal Assembly through the flashing kit, ensure the contact rim of the flashing kit has slid up inside the outer tube of the Terminal Assembly.
From the appliance side, position the Terminal clamp bracket and loosely secure to the roof. Fig. 15.
Fit the Appliance Adaptor to the top of the appliance using 3 screws provided.
Assemble the Flue Extension(s), (elbows, seals, clamps where used), centralising springs and fixing brackets until the dimension between the end of the Flue Tube Adaptor Assembly and the bottom of the last Extension Tube flange is less than 1m, measure this dimension 'W'.
Subtract 3mm from dimension 'W', mark this dimension onto the final Extension Tube, both inner and outer and cut the plane end (Not the flange end).
Remove all burrs.
Temporarily lift the Terminal Assembly and slide the extension tube fixing bracket (if required) and the ceiling seal onto the outer extension tube.
Position the final Inner Extension Tube.
Position the centralising spring.
Position the final Outer Extension Tube.
Lower and reconnect the Terminal Assembly, drill (2mm drill) through the pilot holes in the Outer Extension Tube(s) and Appliance Adaptor. Secure using the screws provided.
Fully tighten the fixing bracket(s) on the extension(s) and the terminal clamp bracket in the roof.
Make good around the Flashing Kit.

12.5 MAKING THE GAS CONNECTION

Note: The whole of the gas installation should be inspected and tested for soundness and purged in accordance with the recommendations of BS 6891.
Make up the gas supply to the connection on the gas control Valve using the Gas Inlet Kit.
Fit the gas Isolation Valve as close as possible to the appliance (Fig. 21).
Check for soundness prior to making the water connections.

12.6 MAKING THE WATER CONNECTIONS

Connect the appliance to the incoming cold water supply using the Water Inlet Kit.
Fit the Isolation Valve as close as possible to the Appliance (Fig. 21).
Connect the appliance to the domestic hot water System using the Water Outlet Kit. (Fig. 21).
Turn on the water supply to the appliance. Open the Isolation Valve on the inlet to the appliance, open the hot water taps and purge the system of air.

12.7 MAKING THE ELECTRICAL CONNECTIONS

The Appliance is supplied with an integral lead and fused Plug.
The Appliance may be permanently wired to a double pole Isolator.

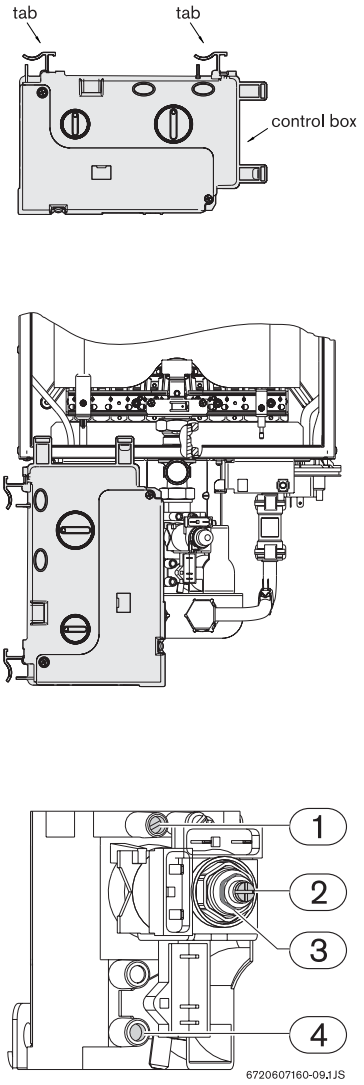

Fig. 22

1 Burner pressure measuring point
2 Minimum gas flow ajustment screw
3 Maximum gas flow adjuster
4 Gas supply pressure measuring point

13. Commissioning

Before commissioning the appliance, the gas installation must be purged and tested for gas soundness in accordance with BS 6891.

13.1) Ensure the gas isolation valve is turned off.

13.2) Remove the appliance outer case.

13.3) To increase access to the pressure test point, the control box may be temporarily repositioned, depress the two curved finger tab latches on top of the control box and withdraw forward. Use the integral moulded hooks to hang the control from the combustion box (Fig. 22).

13.4) Loosen screw (pos. 4) and connect a pressure gauge to the test point. Replace the control box and outer case.

13.5) Turn on the gas isolation valve.

13.6) Move main switch to position **I** (On). Set the temperature control knob to Maximum. Fully open any hot water tap.

Note: On initial light up, or after prolonged shut down, the establishment of a flame may take several attempts due to the presence of air in the gas supply pipe.

13.7) Check the dynamic inlet gas pressure is 20.0 mbar. If the pressure is not correct then check the gas supply to the appliance.

If the pressure is correct, turn off the hot water tap and move the main switch to the off position. Remove the outer case and reposition the control box as in 13.3.

Turn off the gas isolation valve. Remove the pressure gauge and tighten screw (pos. 4).

13.8) The burner pressure is factory set and should not require adjustment.

To confirm the burner pressure stated in table 1, loosen screw (pos 1) and connect a pressure gauge to the pressure test point. Replace the control box and outer case, turn on the gas isolation valve.

With the main switch in position O (off), on the control box front turn the temperature control to position 60. Press and hold the burner indicator button (Fig. 3, key 13). Move the main switch to position I (on), the green burner indicator blinks. Fully open a hot tap, confirm the burner pressure, turn the main switch to position O (off). Turn off the hot water tap, close the gas isolation valve. Remove the case and pressure gauge, tighten screw (pos 1). Replace controls and outer case.

13.9) Should the burner pressure require adjustment, refer to section 15.5, Service Adjustment.

13.10) Open gas Isolation Valve, fit the fascia and set the Main Switch to I (on), the appliance is now ready for operation.

13.11) On completion of the commissioning and testing of the system, the installer should:

13.11.1) Give the Instructions to the user for safe keeping.

13.11.2) Explain and demonstrate the lighting and shutdown procedures.

13.11.3) Advise the user of the precautions necessary to prevent damage to the system and to the building in the event of the system remaining inoperative during frost conditions.

13.11.4) Recommend that the appliance is serviced annually for reasons of safety and economy and that the servicing must be carried out by a competent person.

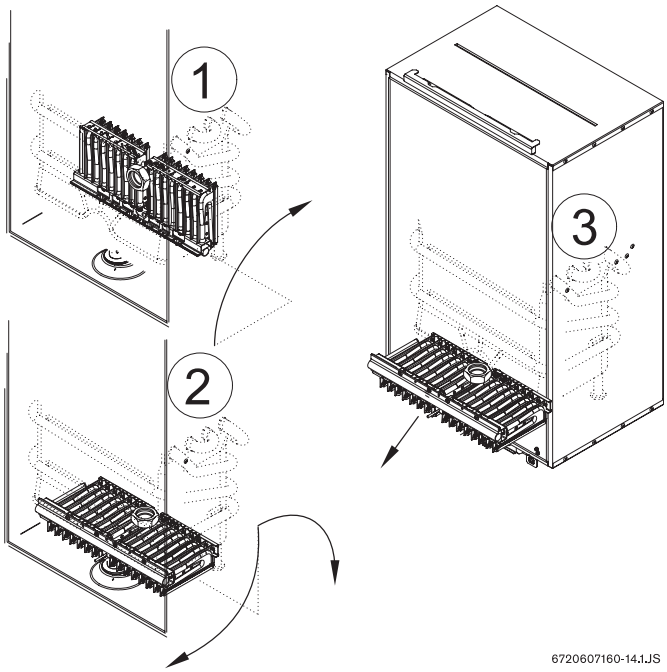

Fig. 23

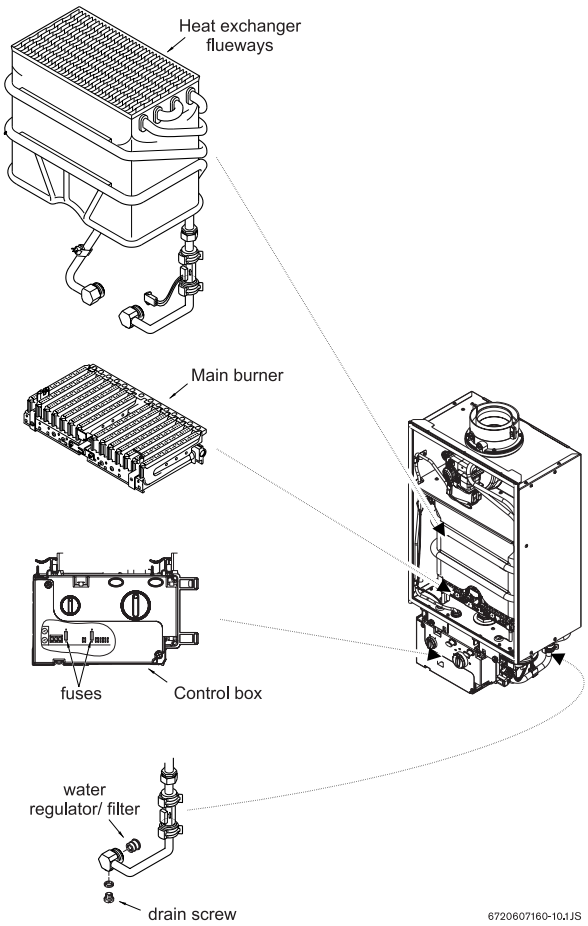

Fig. 24

14. Inspection and Servicing

Warning

Isolate electrical supply before servicing the appliance.

For reasons of safety and economy it is recommend that the appliance is serviced annually. The servicing must be carried out by a competent person.

Before commencing any service operation turn off the gas supply at the main gas isolation valve. Ensure that the appliance is cool.

ACCESS FOR SERVICING

Pull of the fascia and undo the two fixing screws.

Lift the outer case clear.

14.1 Heat Exchanger

Undo the two retaining screws and remove the holding bracket.

Inspect and if necessary clean the heat exchanger flueways.

14.2 Main Burner

Disconnect the wire connections to the ignition and sensing electrodes.

Undo the union connection below the burner.

Remove and retain the fibre washer.

Lift and rotate the front edge of the burner backward through 180 degrees. With the burner oriented horizontally and upside down, withdraw forward beneath the combustion chamber skirt. (fig. 23).

Inspect and clean the injectors if necessary.

Inspect and clean the main burner bars if necessary.

14.3 Water filter

Close the water inlet isolation valve.

Open a hot water tap, open the drain screw and drain the appliance.

Dismantle the cold water inlet pipe.

Clean the water filter/regulator.

14.4 Re-assembling the Appliance

Re-assemble the appliance in reverse order ensuring the following:

The washer in the main gas line union is correctly located.

The seals around the ignition leads and cable entries are correctly seated in the combustion chamber base.

Turn on the gas supply at the main gas isolation valve and check for gas soundness BS 6891 while the appliance is running.

Re-commission the appliance as detailed in Section 13.

14.5 Service adjustment

14.5.1 Max and Min gas rate adjustment

Do NOT use magnetic tools to adjust the gas valve.
Always adjust the MAXIMUM rate BEFORE the MINIMUM.
It is only necessary to adjust the minimum gas rate if the burner frequently goes out when the water flow is reduced toward the minimum specified.

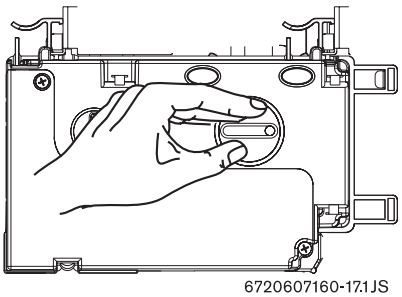

Fig. 25 - Max. adjustment position

Set the main switch to position O (off).
On the control unit front panel, place the rotary temperature control knob at position '60', press and hold the burner indicator button (Fig 3, key 13) and set the main switch to position I (on). The green burner indicator button blinks.

Open a hot water tap. The appliance is operating at its maximum power. Perform the maximum gas adjustment on the corresponding screw (Fig 22 pos 3) to the value stated in Table 1, page 6.

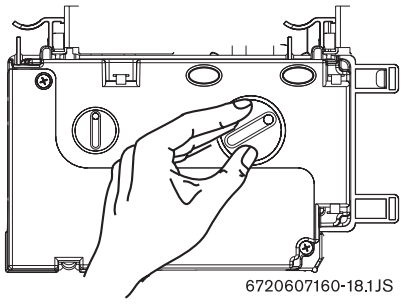

Fig. 26 - Min. adjustment position

On the control unit front panel, place the rotary temperature control knob at position '35'. The appliance works at its minimum power. Perform the minimum gas adjustment on the corresponding screw (Fig. 22, pos. 2) to the value stated in Table 1.

Replace the transparent plastic cover on the gas valve and confirm the adjustments for maximum and minimum by repositioning the rotary temperature control knob at position '60' and position '35' and observing the pressures.

Set the main switch to position O (off), close the hot water tap and set the main switch to position I (on).
The setting of maximum and minimum gas rates is now complete.

14.5.2 Gas Type

The control unit is factory set for the appliance gas type (natural gas).
It may be necessary to repeat the instruction after a major technical intervention. This task is made electronically by programming the control unit.
Set the main switch to position O (off).
Open electronic cover.
Place the jumper according to table 10.

JP6	Gas type
Mounted	GPL
Unmounted	Natural Gas

Table 10

The gas type selection operation is complete.

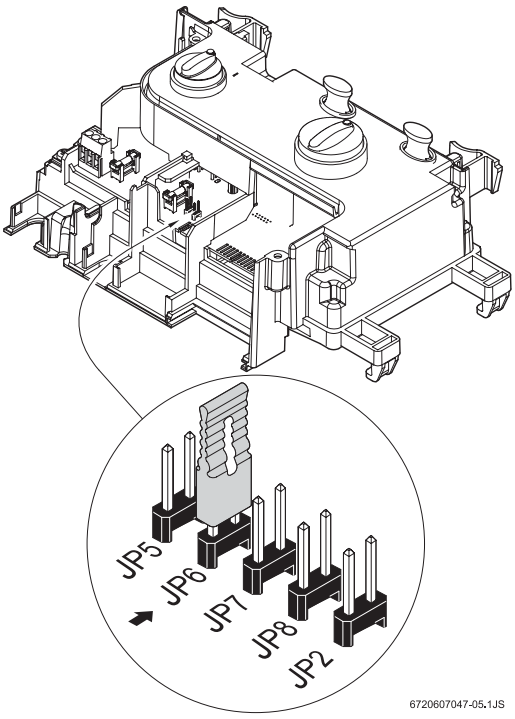

Fig. 27 - Gas type selection

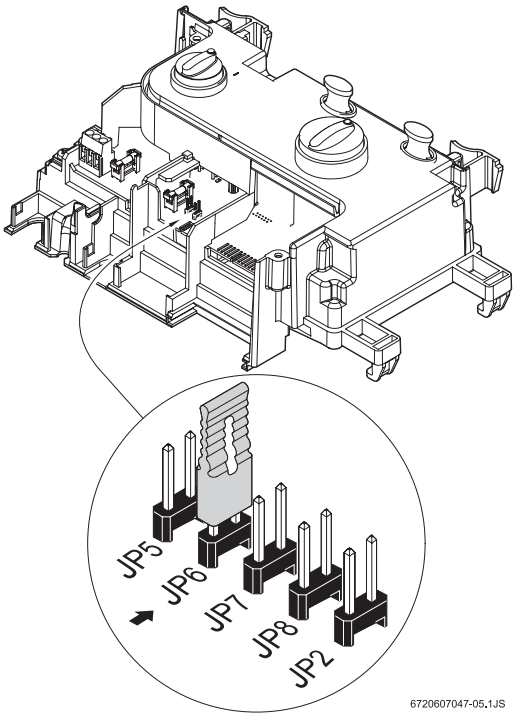

Fig. 28 - Temperature range selection

14.5.3 Temperature range selection

Appliance temperature range is set to 35°C - 60°C. Placing jumper JP7, temperature range changes to 38° - 50°C.

15. Replacement of parts

Warning: Isolate electrical supply before servicing the appliance.

Any servicing or parts replacement must be carried out by a competent person. Use only genuine Manufacturer's Parts. Before commencing servicing or parts replacement turn off the gas supply at the main gas isolation valve and ensure that the appliance is cool.

15.1 Main Burner

Disconnect the spark electrode and the sensing electrode at the main burner.
Remove the two screws retaining the bracket burner front and lift the complete assembly clear.
Undo the union connection below the burner.
Remove and retain the fibre washer.
Lift and rotate the front edge of the burner backward through 180 degrees. With the burner oriented horizontally and upside down, withdraw forward beneath the combustion chamber skirt.
Replace the burner and re-assemble in reverse order.

15.2 Spark Electrode / Sensing electrode

Remove main burner as described in Section 16.1 and replace faulty components.

15.3 Heat Exchanger

Isolate the appliance from the incoming cold water supply, open a hot tap and drain down the appliance via the fitted drain cock.
Undo the two retaining screws from the heat exhanger bracket.
Disconnect the heat exchanger inlet and flow pipes at the base of the combustion chamber.
Remove the locknuts from the heat exchanger inlet and outlet connections and lift the heat exchanger clear.
Replace the heat exchanger and re-assemble in reverse order.

15.4 Water sensor (Turbine)

Isolate the appliance from the incoming cold water supply, open a hot water tap and drain down the appliance via the fitted drain cock.
Disconnect the temperature sensor from the inlet water pipe.
Undo the wire connections between the control box and and the water sensor (turbine).
Remove the two spring clips and replace the turbine.
Reassemble in reverse order.

15.5 Gas Valve

Place the control box in maintenance position as described in Section 13.3.
Undo all wire connections to the gas valve.
Undo the connection between the gas valve and the burner connector.
Remove the two screws securing the inlet end of the valve to the mounting bracket, remove the valve.
Replace the gas valve and re-assemble in reverse order.
Check inlet pressure and Max and Min burner pressures

as per Section 15.5.1.

15.6 Control Unit

Unfasten the two screws securing the front panel of the control unit and remove. Disconnect inlet cable and all wiring connections. Remove control unit by depressing the two curved finger tabs on top of the box and withdraw forward.

Replace the control unit and reconnect the wiring.

Carry out Gas Type selection as in Section 15.5.2 and Performance Optimisation as Section 14.

15.7 Fuses

Unfasten the two screws securing the front panel of the control unit and remove.

Replace appropriate fuse as per Fig 8, key 7 or 8.

15.8 Fan

Remove all wiring connections from the fan.

Remove the pressure sensing tubes from the fan noting their position, black to the top, clear to the bottom connection.

Remove the four fixing screws securing the fan to the appliance.

Remove the fan and check for a restrictor ring as per Section 12.2, Tables 6 or 7, remove restrictor and place with new fan as appropriate (Fig 12).

Re assemble in reverse order.

15.9 Pressure switch

Remove the wiring connections.

Remove the pressure sensing tubes, noting their position, black to the bottom, clear to the top.

Unfasten the retaining screw, replace the switch.

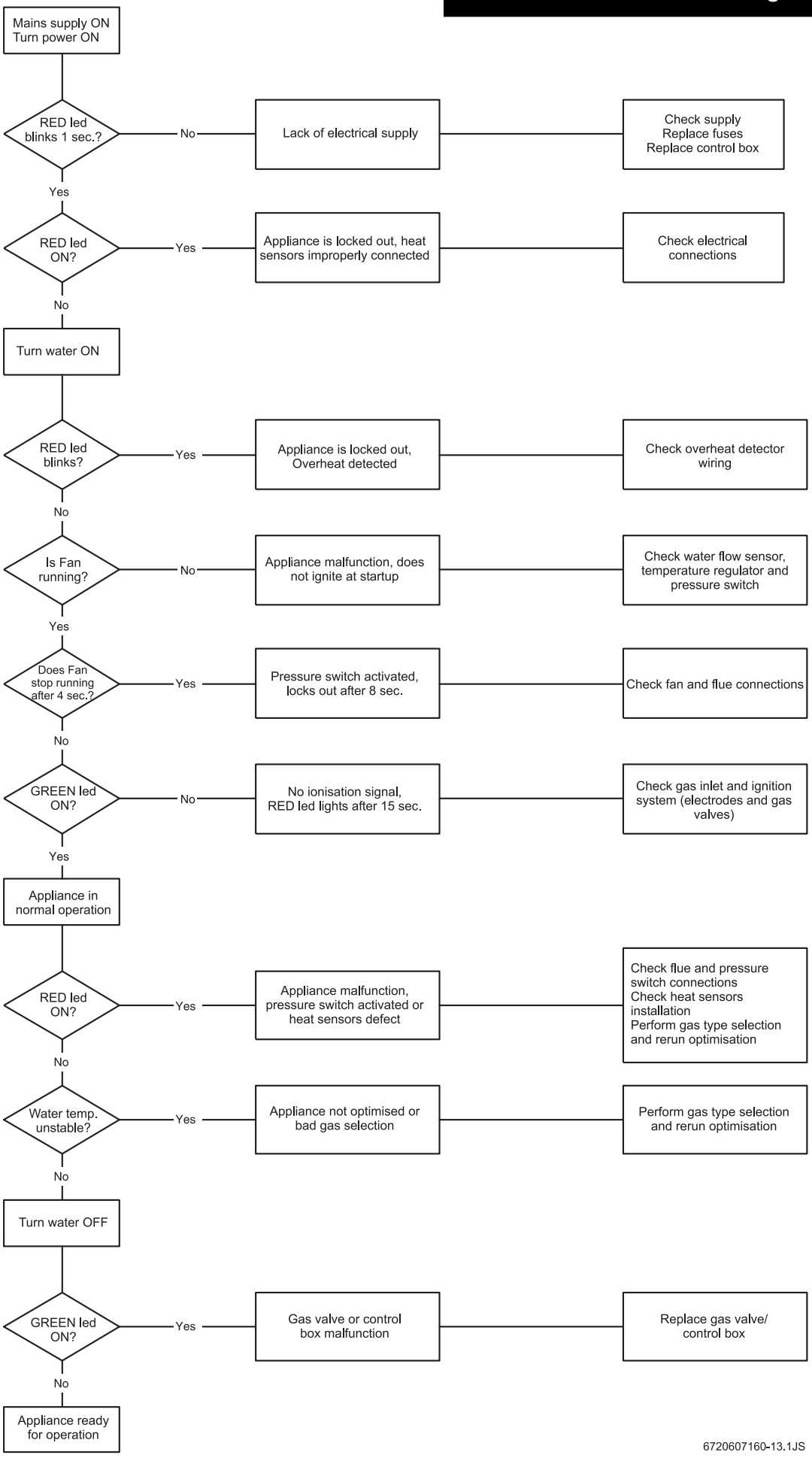

Note: Installation, maintenance and repairs must be carried out only by a competent person.

17. Short Parts List

Item	Baxi Potterton Number
Spark Electrode	5111115
Sensing Electrode	5111116
Flow Sensor	5111117
Control Unit	5111118
Fuse T 1.25A	5111119
Fuse 2A	5111120
Pressure Switch	5111121
Fan	5111122
Gas Valve	5111123

18. Notes

GENERAL ENQUIRIES (GB)

08706 060 780

TECHNICAL (GB)

08706 049 049

SERVICE (GB)

08706 096 096

LITERATURE REQUEST (GB)

08706 060 623

TECHNICAL (IE)

1850 560 570

MAIN

Baxi Potterton
A Trading Division of Baxi Heating U.K. Ltd
Brownedge Road Bamber Bridge Preston Lancashire PR5 6SN

www.baxipotterton.co.uk

Comp N° 5111037 – Iss 4 – 12 / 05