MAXOL

# SUPACOMBI HE28

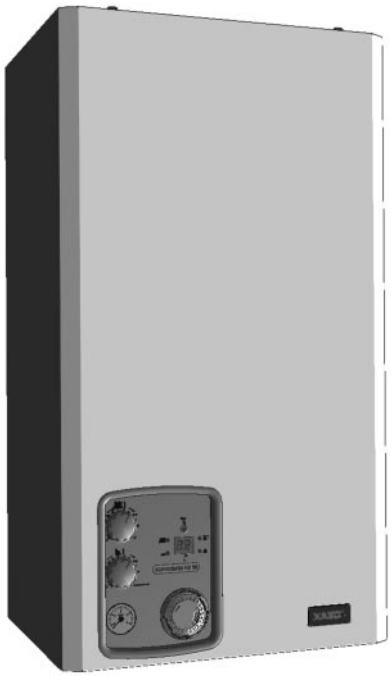

## INSTALLATION & SERVICING INSTRUCTIONS

TO BE GIVEN TO THE USER

CE
0086
Pin 87/BR/93

G.C. Appliance No. 47-260-12

# CONTENTS


| SECTION | DESCRIPTION | PAGE NO |
|---|---|---|
| 1 | **INTRODUCTION** | **0** |
| 1.1 | Important Information | 1 |
| 1.2 | General Description | 1 |
| 2 | **TECHNICAL SPECIFICATIONS** | **2** |
| 2.1 | Gas Categories | 2 |
| 2.2 | Performance Data | 2 |
| 2.3 | General Specifications | 3 |
| 2.4 | Overall Dimensions & Minimum Clearances | 4 |
| 2.5 | Concentric Air / Flue Duct Specifications | 4 |
| 2.5.3 | Additional Concentric Flue Kits Plume Diverter Kit | 5 |
| 2.5.4 | Plume Diverter Kit | 6 |
| 2.6 | Appliance Hydraulic Circuit | 7 |
| 3 | **INSTALLATION REQUIREMENTS** | **8** |
| 3.1 | Statutory Requirements | 8 |
| 3.2 | Appliance Location | 8 |
| 3.3 | Flue Terminal Position | 8 |
| 3.4 | Ventilation Requirements | 8 |
| 3.5 | Condensate Disposal | 9 |
| 3.6 | Gas Supply | 9 |
| 3.7 | Central Heating systems | 9 |
| 3.8 | Domestic Hot Water System | 10 |
| 3.9 | Electricity Supply | 11 |
| 3.10 | External Controls | 11 |
| 4 | **APPLIANCE INSTALLATION** | **12** |
| 4.1 | Unpacking The Appliance | 12 |
| 4.2 | Preparing The Wall | 12 |
| 4.3 | Mounting The Appliance | 13 |
| 4.4 | Central Heating and Domestic Hot Water Service Connections | 13 |
| 4.5 | Gas Connection | 13 |
| 4.6 | Condensate Connection | 13 |
| 4.7 | Pressure Relief Valve Connection | 14 |
| 4.8 | Air/Flue Duct Installation | 14 |
| 4.9 | Electrical Connections | 15 |
| 5 | **COMMISSIONING AND TESTING** | **16** |
| 5.1 | Filling the Water System | 16 |
| 5.2 | Commissioning the Appliance | 17 |
| 5.3 | DHW Flow Rate | 18 |
| 5.4 | Final Checks | 18 |
| 5.5 | Lockout / Reset Indication | 18 |
| 5.6 | Frost Protection | 18 |
| 5.7 | Overheat Protection | 18 |
| 5.8 | Other Features | 18 |
| 5.9 | Users Instructions | 19 |
| 5.10 | Appliance Log Book | 19 |
| 6 | **ROUTINE SERVICING** | **20** |
| 6.1 | Combustion Check | 20 |
| 6.2 | Removal of Casing Panels | 21 |
| 6.3 | Burner Removal and Cleaning | 21 |
| 6.4 | Gas Rate Check | 22 |
| 6.5 | Cleaning the Primary Heat Exchanger | 22 |
| 6.6 | Condensate Drain | 22 |
| 6.7 | Re-assembly | 23 |
| 7 | **INTERNAL WIRING DIAGRAM** | **24** |
| 7.1 | Functional Flow Wiring Diagram | 24 |
| 8 | **FAULT FINDING** | **25** |
| 8.1 | General | 25 |
| 8.2 | Diagnostic Indicators | 25 |
| 8.3 | Fault Finding Codes | 25 |
| 8.4 | DHW Fault Finding | 25 |
| 8.5 | Central Heating Fault Finding | 25 |
| 9 | **REPLACEMENT OF PARTS** | **28** |
| 9.1 | Primary Heat Exchanger | 28 |
| 9.2 | Combustion Chamber Insulation | 28 |
| 9.3 | Condensing Heat Exhanger | 28 |
| 9.4 | Fan and Air Pressure Switch | 29 |
| 9.5 | Burner | 29 |
| 9.6 | Ignition and Detection Electrodes | 29 |
| 9.7 | Gas Valve | 29 |
| 9.8 | Diverter Valve Actuator | 30 |
| 9.9 | Draining the Boiler | 30 |
| 9.10 | CH Flow Switch | 30 |
| 9.11 | DHW Flow Sensor (Hall Effect) | 30 |
| 9.12 | DHW Flow Regulator | 31 |
| 9.13 | DHW Plate Heat Exchanger | 31 |
| 9.14 | CH/DHW Thermistors | 31 |
| 9.15 | Pump | 31 |
| 9.16 | Auto Air Vent | 32 |
| 9.17 | Pressure Relief Valve | 32 |
| 9.18 | Pressure Gauge | 32 |
| 9.19 | Condensate Trap | 32 |
| 9.20 | Control PCB | 33 |
| 9.21 | Timeclock | 33 |
| 10 | **SHORT PARTS LIST** | **34** |


# 1 INTRODUCTION

The **Maxol Supacombi HE 28** is a high efficiency condensing, fully automatic, wall mounted, fan-assisted, balanced flue gas combination appliance suitable for room sealed applications, for use with natural gas (G20) only. This combination appliance provides the user with both central heating (CH) and domestic hot water (DHW) on demand.

The appliance features an attractive white stove enamelled casing, with an inset control panel. The flue systems are in white enamel to give a clean attractive appearance to the installation.

A telescopic horizontal concentric air/flue duct terminal is available, (maximum duct length of 650 mm (25½ in)), suitable for room sealed applications. The duct assembly is connected to the appliance via a turret, which can be orientated to provide different horizontal duct directions. Extension ducts may be fitted in accordance with and up to the maximum dimensions stated in these instructions.

A vertical concentric outlet kit is also available for installations where an outside wall is not accessible or where it is desired to fit the duct 'through the roof'. Installation using the horizontal duct is described in the main text of these instructions and additional information is provided in the vertical outlet kit for the vertical installation option. (Note: If the vertical outlet kit is to be used, access to the roof is necessary).

Extension ducts are available, contact Technical Help Line: 01926 834834, for further details.

**ONLY APPROVED FLUE KITS OR EXTENSIONS MAY BE USED WITH THIS APPLIANCE.**

## 1.1 IMPORTANT INFORMATION

**IT IS A STATUTORY REQUIREMENT THAT ALL GAS APPLIANCES ARE INSTALLED BY COMPETENT PERSONS, (i.e. CORGI REGISTERED INSTALLERS) IN ACCORDANCE WITH THE GAS SAFETY (INSTALLATION AND USE) REGULATIONS (CURRENT EDITION).**

***FAILURE TO COMPLY WITH THESE REGULATIONS MAY LEAD TO PROSECUTION.***

These appliances have been tested and certified in order to satisfy the necessary European Directives and comply with the latest Building Regulations, including the efficiency requirements of the SEDBUK scheme.

| | |
|---|---|
| Gas Appliance Directive | 90/396/EEC |
| Efficiency of Hot Water Boilers Directive | 92/42/EEC |
| Low Voltage Directive | 93/68/EEC |
| Electromagnetic Compatibility Directive | 92/31/EEC |

No modifications to these appliances should be made unless they are fully approved by the manufacturer.

Appliance installation must be carried out by a competent person and must be in accordance with the current legislation in force at the time of installation, in the country of destination.

The manufacturer's instructions must not be taken as overriding any statutory requirements.

### Control of Substances Hazardous to Health

Under Section 6 of the Health and Safety at Work Act 1974, it is a requirement to provide information on substances hazardous to health.

Maxol products are manufactured in accordance with ISO 9000 and do not, and will not, contain any hazardous materials or substances such as asbestos, mercury or C.F.C.s.

The adhesives and sealants used in this appliance are cured and give no known hazard in this state.

The appliance packaging does not contain any substances which may be considered a hazard to health.

### Combustion chamber panels

**Material:** mineral fibres

*Known hazards* – If you have a history of skin complaint you may be susceptible to irritation. High dust levels are usual only if the material is broken. Some people can suffer reddening and itching of the skin. Fibre entry in to the eye will cause foreign body irritation, which can cause severe irritation to people wearing contact lenses. Irritation to respiratory tract.

*Precautions* – Dust goggles will protect eyes. People with a history of skin complaints may be particularly susceptible to irritation. High dust levels are only likely to arise following harsh abrasion. In general, normal handling and use will not present high risk, follow good hygiene practices, wash hands before touching eyes, eating, drinking or using the toilet.

*First aid* – If you do suffer irritation to the eyes or severe irritation to the skin seek medical attention.

**GAS LEAKS. DO NOT OPERATE ANY ELECTRICAL SWITCHES, OR USE A NAKED FLAME. TURN OFF THE GAS SUPPLY. VENTILATE THE AREA BY OPENING DOORS AND WINDOWS. CALL OUT YOUR LOCAL GAS SUPPLIER TEL: 0800 111 999.**

### Gas and Electricity Consumer Council (Energywatch)

Energywatch is an independent organisation, which protects the interests of gas users. If you need advice concerning energy issues, they may be contacted on their consumer help line number: 08459 060708, or via their web site;

http://www.energywatch.org.uk.

## 1.2 GENERAL DESCRIPTION

The appliance incorporates a microprocessor based safety system, called DICOM (Digital Combustion) that consists of the boilers main PCB, the gas control valve (CES) and the air pressure switch for controlling and regulation of the modulating atmospheric gas burner with fan. It has direct burner ignition, which provides a modulated heat output to either central heating (CH) or domestic hot water (DHW) demands, and with internal frost protection provided as standard. The appliance incorporates a domestic hot water (DHW) pre-heat feature which can automatically adjust to the user's habitual requirements. Thus during long stand still periods, e.g. overnight, no pre-heat is provided.

The appliance is designed for use with sealed primary water systems and incorporates a circulating pump, diverter valve assembly, pressure gauge, flow switch, safety valve and system expansion vessel. A separate DHW expansion vessel is not required. Isolation valves are fitted to the service connections and an automatic heating by-pass is fitted to maintain an adequate flow rate through the boiler.

The appliance has a DHW flow detection device, which gives priority to DHW demand and proportions the required heating load to the DHW flow rate, an electro-mechanical 24 hour time clock is also fitted as standard.

The appliances may be used with any certified mains voltage room thermostat, and can operate without the need for an automatic bypass valve in the CH circuit. However, it is recommended that one radiator in the room where the room thermostat is fitted, is installed without thermostatic radiator valves to allow the pump overrun facility to operate correctly. A separate CH expansion vessel is not required if the total CH system content is less than 84 litres, but one is required for systems with volumes greater than 84 litres; refer to section 3.7. A separate DHW expansion vessel is not required.

It is recommended that a drain cock is fitted at the lowest point in the system.

# 2 TECHNICAL SPECIFICATIONS

## 2.1 GAS CATEGORIES

This appliance is certified to comply with the requirements of EN 483, EN 677, and EN 625 for use in GB and IE (Great Britain and Ireland) using gas category 2H (G20 with a governed gas supply at 20 mbar (8 in.wg) inlet pressure).

The appliance classification (as defined in EN 483) will be one of the following depending on the chosen flue option: $C_{12}$, $C_{32}$.

## 2.2 PERFORMANCE DATA

| Appliance<br>Mode | Rate | | Maxol Supacombi HE 28 |
|---|---|---|---|
| **Central Heating Output (non-condensing) (80 - 60 °C)** | Max | kW<br>(Btu/h) | 28.3<br>(96600) |
| | Min | kW<br>(Btu/h) | 12.1<br>(41300) |
| **Central Heating Output (condensing) (50 - 30 °C)** | Max | kW<br>(Btu/h) | 30.7<br>(104800) |
| **Central Heating Input Max Rate** | Net | kW<br>(Btu/h) | 29.0<br>(99000) |
| | Gross | kW<br>(Btu/h) | 32.2<br>(110000) |
| **Central Heating Input Min Rate** | Net | kW<br>(Btu/h) | 13.0<br>(44400) |
| | Gross | kW<br>(Btu/h) | 14.4<br>(49200) |
| **Domestic Hot Water Output** | Max | kW<br>(Btu/h) | 28.3<br>(96600) |
| | Min | kW<br>(Btu/h) | 12.1<br>(41300) |
| **Domestic Hot Water Input Max Rate** | Net | kW<br>(Btu/h) | 29.0<br>(99000) |
| | Gross | kW<br>(Btu/h) | 32.2<br>(110000) |
| **Domestic Hot Water Input Min Rate** | Net | kW<br>(Btu/h) | 13.0<br>(44400) |
| | Gross | kW<br>(Btu/h) | 14.4<br>(49200) |
| **Central Heating Gas Rate (after 10 min operation - hot)** | Max | m3/h<br>ft3/h | 3.07<br>(108.4) |
| **Domestic Hot Water Gas Rate (after 10 min operation - hot)** | Max | m3/h<br>ft3/h | 3.07<br>(108.4) |
| **Burner Pressure (at 20mbar inlet pressure)** | Max<br>Min<br>Ignition | mbar | 10.0<br>1.6<br>6.0 |
| **Injectors** | | | 130 |
| **Seasonal Efficiency** | | % | 87.5 |

| Appliance | | Maxol Supacombi HE 28 |
|---|---|---|
| **Seasonal Efficiency (SEDBUK)** | Band | "B" |
| **NOx Classification** | Class | "2" |
| **Design Domestic Hot Water Performance raised 35°C** | l/min (gpm) | 11.5 (0.5) |
| **DHW Specific Rate (D) EN625** | l/min | 13.5 |
| **Min Mains Water Inlet Pressure for Operation** | Bar (psi) | 0.3 (4.3) |
| **Max Mains Water Inlet Pressure** | Bar (psi) | 10 (145) |
| **Min Domestic Hot Water Flow Rate for Operation** | l/min (gpm) | 2.5 (0.5) |
| **Min Central Heating System Pressure** | Bar | 0.3 |
| **Max Central Heating System Pressure** | Bar | 2.5 |
| **Max Domestic Hot Water Temperature** | °C | 60 |
| **Min Domestic Hot Water Temperature** | °C | 40 |
| **Max Central Heating Flow Temperature** | °C | 80 |
| **Min Central Heating Flow Temperature** | °C | 40 |

## 2.3 GENERAL SPECIFICATIONS

| Appliance | | Maxol Supacombi HE 28 |
|---|---|---|
| **Total weight (full)** | kg | 54.0 |
| **Total weight (empty)** | kg | 49.0 |
| **Max lift weight** | kg | 43.0 |
| **Total water capacity** | Ltr | 4.8 |
| **Integral expansion vessel capacity** | Ltr | 8 |
| **Maximum heating system water content using fitted expansion vessel, @ 0.75 bar** | Ltr | 84 |
| **Electrical supply** | | 230V~50Hz Fuse at 3A |
| **Internal fuse** | | None |
| **Maximum power consumption** | W | 130 |
| **IP Rating** | | IP20 |
| **$CO_2$ value max rate** | % | 6.8 ± 1 |
| **CO value max rate** | ppm | 75 |
| **Flue products mass flow rate** | g/s | 17.0 |
| **Flue gas temperature - max rate** | °C | 90 |

**Connections**

| | |
|---|---|
| **Gas** | 15 mm compression |
| **CH flow** | 22 mm compression |
| **CH return** | 22 mm compression |
| **DHW inlet** | 15 mm compression |
| **DHW outlet** | 15 mm Copper Tail |
| **Pressure relief valve outlet** | 15 mm Copper Tail |
| **Condensate Drain** | 19mm I/D Plastic overflow pipe |

## 2.4 OVERALL DIMENSIONS AND MINIMUM CLEARANCES

1

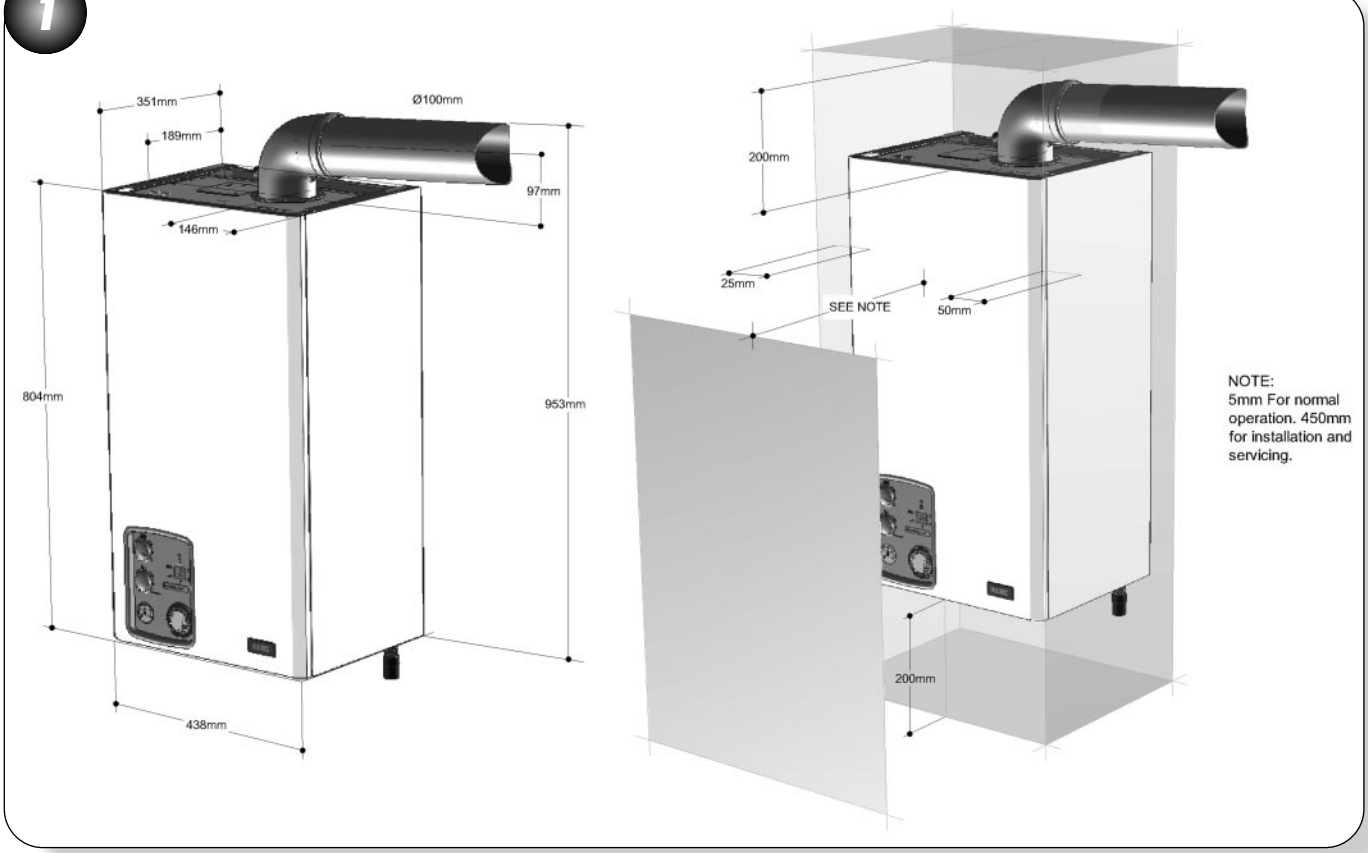


## 2.5 CONCENTRIC AIR / FLUE DUCT SPECIFICATIONS

The Maxol Supacombi HE 28 can be installed to a horizontal or a vertical flue system. The different flue applications as shown in Fig. 2a and Fig. 2b are available as a Horizontal Wall terminal kit or a Vertical Concentric flue terminal kit comprising the connecting parts to the appliance and end terminal.

## 2.5.1 UNIVERSAL TELESCOPIC WALL TERMINAL KIT ($C_{12}$) - PART NO. 956120

2a

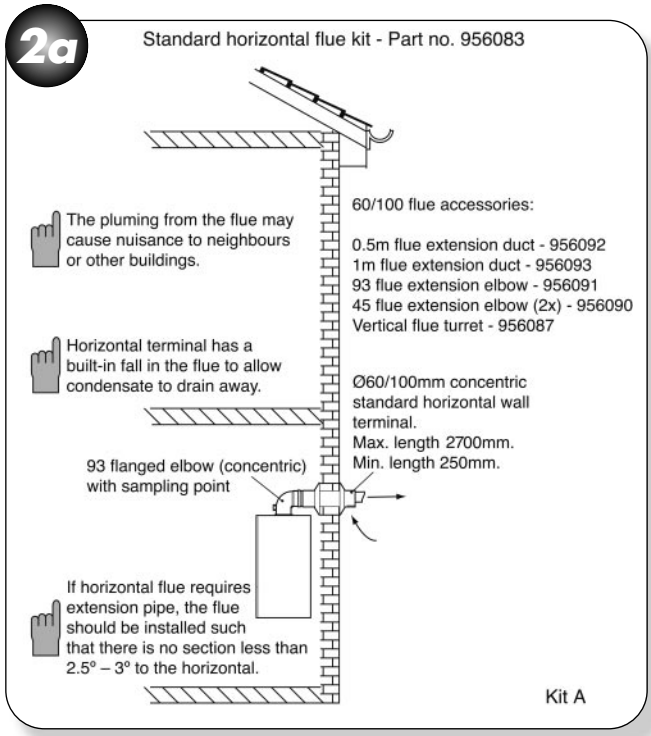


**(C12) – PART NO. 956120**

Traditional concentric flue system, Fig. 2a, with a maximum length of 2700mm. The flanged flue elbow is designed with 2.5° slope towards the appliance so that the condensate can easily drain off. When installing, please note that for every metre horizontal flue length the terminal exit centreline is approx. 45 mm higher than the elbow's centreline.

The standard terminal is telescopic and can be used between 450 to 635 mm (from the centre of flue outlet to the outside wall, but can be cut to a minimum flue length of 250mm, which is suitable for single, 100mm (4"), brick walls.

## 2.5.2 VERTICAL CONCENTRIC FLUE TERMINAL KIT ($C_{32}$) - PART NO. 956081

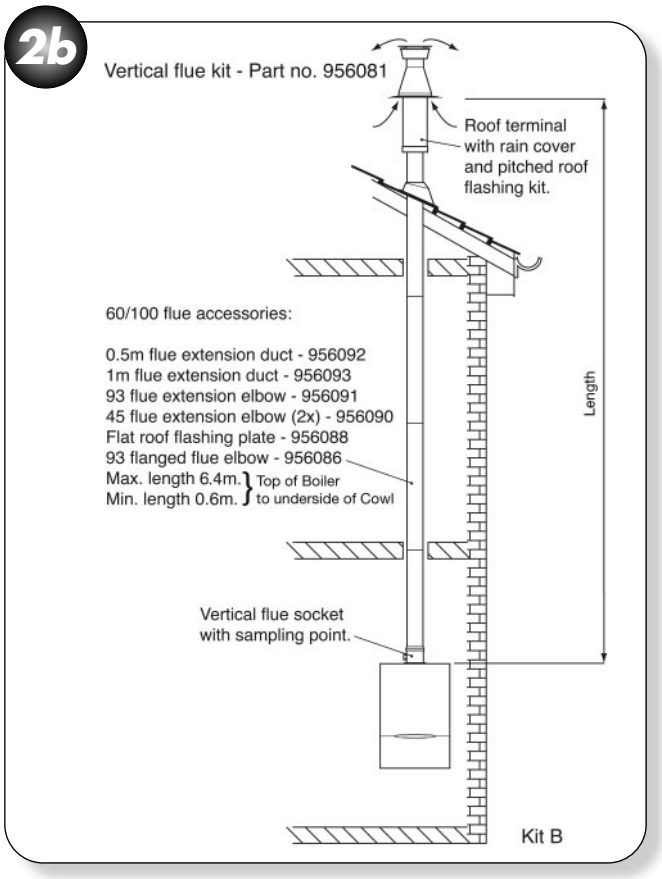


Standard concentric (ø100/60) vertical flue application with a maximum length of 6400mm. The kit comprises of the roof terminal, flashing kit, vertical adaptor with sampling point and bracket.

The maximum length is measured from the top of the appliance casing to the underside of the air cowl.

*For installation details refer to the instructions provided with the individual flue kits.*

*Dimensions from vertical terminals to opening windows should be in line with Fig. 4*

## 2.5.3 ADDITIONAL CONCENTRIC FLUE KITS

The following additional concentric kits are available as optional extras.

**Flue Extension Ducts** - 1000 mm and 500 mm long, (each duct extends the flue length by up to 950 mm and 450 mm respectively).

**93° Extension Elbow** - Allows an additional bend in the flue, and has an 'equivalent length' of 1550 mm. This elbow is mechanically different from the flanged elbow supplied as standard with the kit, but has the same equivalent length.

**45° Extension Elbow** - Allows an additional bend in the flue and has an 'equivalent length' of 775 mm.

*The 'equivalent' flue length must not exceed the maximum values stated.*

These optional kits may be used with the standard flue kits to produce an extended range of flue options, providing that the following rules are strictly obeyed.

**a)** The maximum/minimum permissible length of the room sealed flue system are:

| | |
|---|---|
| Horizontal flue terminal (all orientations) | maximum 2700mm (106 in) |
| Horizontal flue terminal (rear exit) | minimum 250 mm (10 in) |
| Vertical flue terminal | maximum 6400 mm (252 in) |
| Vertical flue terminal | minimum 600 mm (23 1/2 in) |

**b)** The standard terminal must always be fitted horizontally; horizontal ducts must have a continuous fall towards the appliance of 2.5°. This ensures condensate runs back into the appliance from the flue system. The vertical terminal must always be used if a vertical outlet is required.

**c)** The concentric flue system must use either a flanged elbow or a vertical flue turret socket at the entry/exit to the appliance.

**d)** All joints must be correctly made and secured in accordance with the installation instructions. When cutting ducts, avoid swarf, uneven and sharp edges to maintain duct integrity.

## 2.5.4 PLUME DIVERTER TERMINAL INSTALLATION

**Plume Diverter Kit Part No: 956103**

(For use with Telescopic horizontal flue kit - Part no 956120 - only)

This kit is provided to assist in fitting a condensing boiler with reduced clearances when fitted in good practice according to the Guide to Condensing Boiler Installation published by DEFRA/HMSO.

This kit allows the boiler flue outlet to be directed to the left or to the right only.

### INSTALLATION INSTRUCTIONS

Under certain operating conditions condensing appliances have a tendency to form a plume of water vapour at the terminal.

Therefore consideration should be given when fitting the Plume Diverter in terms of plume dispersal onto adjacent surfaces and neighbouring properties.

**a)** Refer to section 4.8 for instructions on fitting the flue system. Also see Figure 4 for all other clearances.

2c

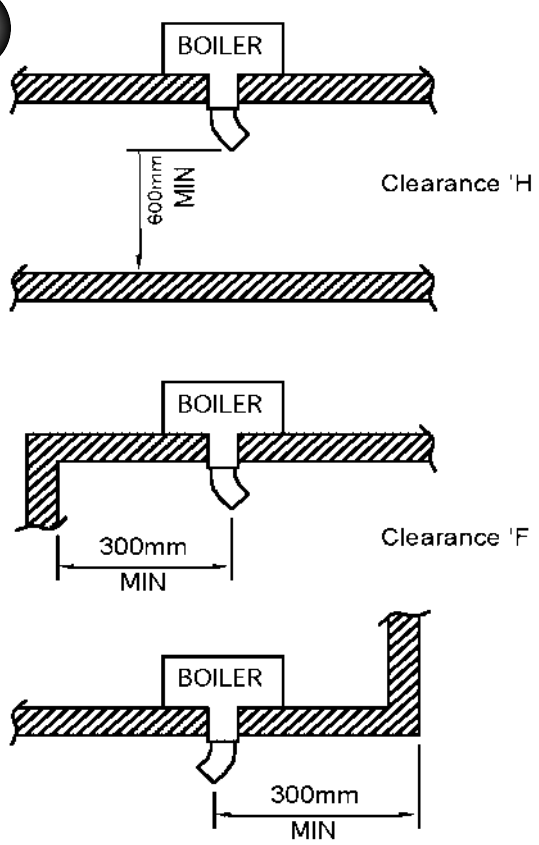


*The resistance of the plume diverter is equivalent to 1.2 Mtrs of flue length. Ensure this is taken into account when calculating the maximum allowable remaining flue length. (ie Max flue length = 2.7 Mtrs subtract plume diverter @ 1.2 Mtrs = 1.5 Mtrs remaining length)*

The diverter allows the terminal clearance to be reduced as follows (see diagram 2c):

***Clearance H – From a surface facing the terminal - 600mm.***

***Clearance F – From internal or external clearances - 300mm.***

**b)** Choose the direction required to deflect the flue products **(left or right only)**

**c)** Push the diverter elbow onto the angled outlet of the flue terminal in the desired rotational position and ensure the diverter is pushed up to the shoulder to fully engage the rubber seal.

**d)** Fix the diverter to the flue terminal with the self drilling screw provided. **Do not use a power tool to fit screw.**

2d

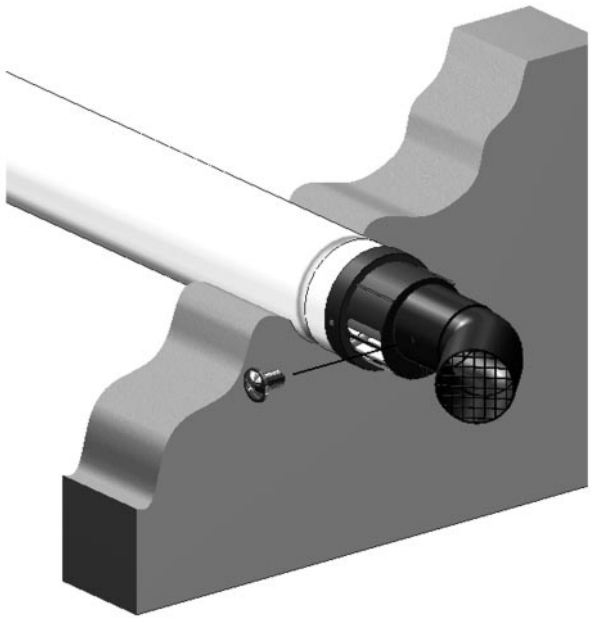

***Note.***
***The Plume Diverter terminal must not under any circumstances deflect flue products downwards.***

3

Central heating (c.h.) operation

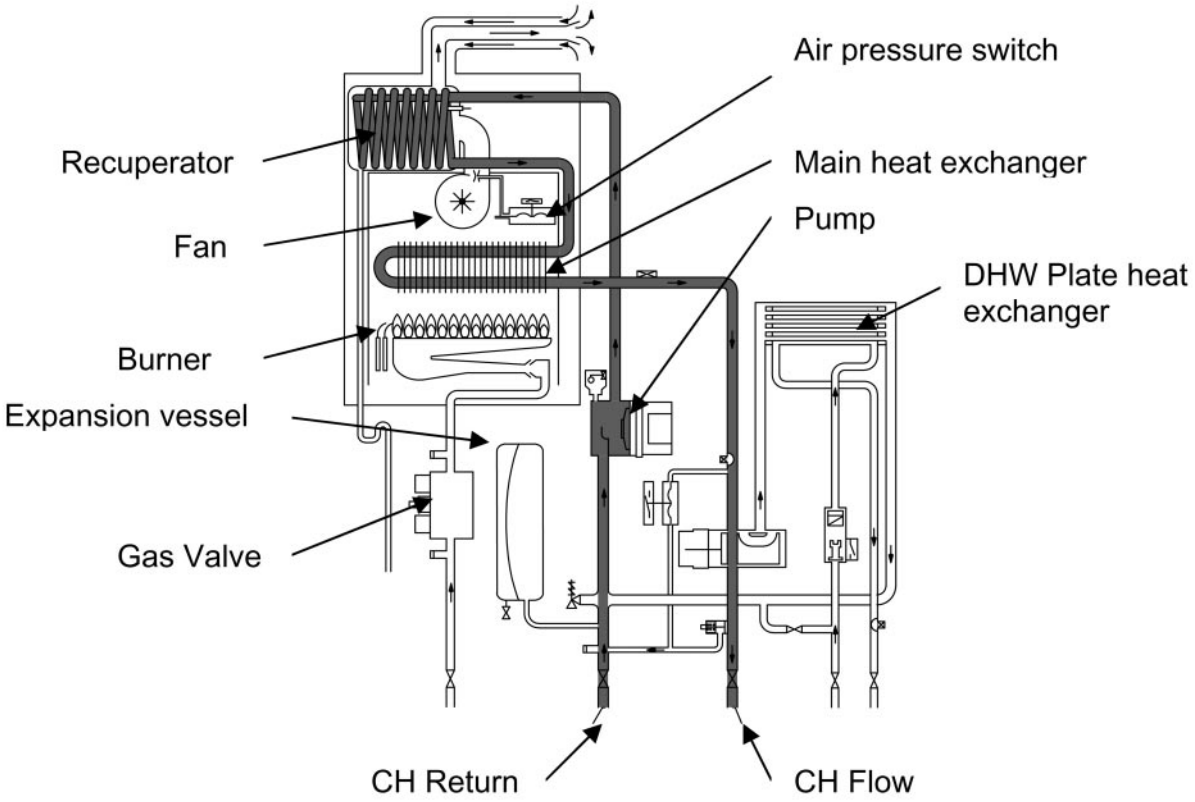


Domestic hot water (d.h.w.) operation

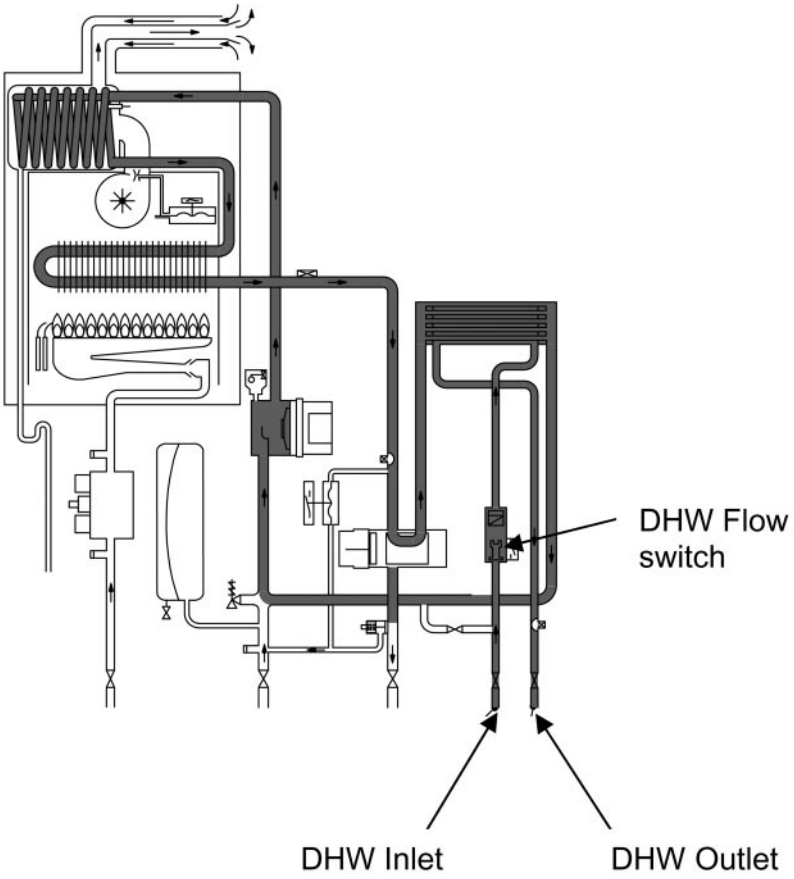

# 3 INSTALLATION REQUIREMENTS

## 3.1 STATUTORY REQUIREMENTS

**GAS SAFETY (INSTALLATION AND USE) REGULATIONS**

The appliance is suitable only for installation in GB and IE and should be installed in accordance with the rules in force.

In GB, a CORGI Registered Installer must carry out the installation. It must be carried out in accordance with the current relevant requirements of the:

**Gas Safety (Installation and Use) Regulations**

The appropriate Building Regulations either The Building Regulations, The Building Regulations (Scotland), Building Regulations (Northern Ireland).

**The Water Fitting Regulations or Water Byelaws in Scotland.**

**The Current I.E.E Wiring Regulations.**

Where no specific instructions are given, reference should be made to the relevant British Standard code of Practice.

In IE, the installation must be carried out by a Competent Person and installed in accordance with the current edition of I.S.813 "Domestic Gas Installations", the current Building Regulations and reference should be made to the current ETCI rules for electrical installation.

It should also be in accordance with the relevant recommendations in the current editions of the following British Standards and Codes of Practice: BS 5449, BS 5546, BS 5440-1, BS 5440-2, BS 6798, BS 6891, Institute of Gas Engineer document IGE/UP-7, BS 7074 (expansion vessel) and I.S.813 for IE.

**IMPORTANT NOTE:** Manufacturer's instruction must NOT be taken in any way as overriding statutory obligations.

## 3.2 APPLIANCE LOCATION

**The following limitations MUST be observed when siting the appliance:**

**a)** The appliance is not suitable for external installations. The position selected for installation should be within the building, unless otherwise protected by a suitable enclosure and MUST allow adequate space for installation, servicing and operation of the appliance and for air circulation around it (Section 2.4 and 3.4).

**b)** This position MUST allow for a suitable flue system and terminal position. The appliance must be installed on a flat vertical wall, which is capable of supporting the weight of the appliance and any ancillary equipment.

**c)** If the appliance is to be fitted in a timber framed building it should be fitted in accordance with the British Gas publication 'Guide for Gas Installations In Timber Frame Housing', Institute of Gas Engineers document IGE/UP-7. If in doubt, advice must be sought from the Local Gas Supplier.

**d)** The appliance is approved to a protection rating of IP20. Therefore if the appliance is to be installed in a room containing a bath or a shower, any electrical switch or control utilising mains electricity must be so situated that it cannot be touched by a person using the bath or shower. Attention is drawn to the requirements of the current BS 7671 (I.E.E Wiring Regulations) and in Scotland the electrical provisions of the Building Regulations applicable in Scotland.

## 3.3 FLUE TERMINAL POSITION

**Detailed recommendations for flue installation are given in BS 5440-1. The following notes are for general guidance.**

**a)** The appliance MUST be installed so that the terminal is exposed to the external air.

**b)** It is important that the position of the terminal allows free passage of air across it at all times.

**c)** It is ESSENTIAL TO ENSURE that products of combustion discharging from the terminal cannot re-enter the building or any other adjacent building, through ventilators, windows, doors, other sources of natural air infiltration, or forced ventilation / air conditioning.

**d)** The minimum acceptable dimensions from the terminal to obstructions and ventilation openings are specified in Figure 4.

**e)** If the terminal discharges into a pathway or passageway check that combustion products will not cause nuisance and that the terminal will not obstruct the passageway.

**f)** Where the lowest part of the terminal is fitted less than 2000 mm (78 in) above the ground, above a balcony or above a flat roof to which people have access, the terminal MUST be protected by a purpose designed K6 terminal guard (optional extra: Part No. 951507).

**g)** The air inlet / flue outlet MUST NOT be closer than 25 mm (1 in) to combustible material.

**h)** Condensing appliances have a tendency to form a plume of water vapour at the terminal under certain operating conditions. This is normal but positions where this would cause damage or a nuisance should be avoided. Consideration should be given to the dispersal of the plume in terms of adjacent surfaces and neighbouring properties.

## 3.4 VENTILATION REQUIREMENTS

Detailed recommendations for air supply are given in BS 5440-2. The following notes are for general guidance.

**a)** It is not necessary to have a purpose provided air vent in the room or internal space in which a room-sealed appliance is installed.

**b)** Cupboard or compartment ventilation is not necessary for a room-sealed appliance providing that the minimum clearances are maintained. Consideration must also be taken into account of the clearance requirements for maintenance. On no account must stored articles be allowed to come into contact with the boiler or flue system.

**c)** If the appliance is installed in a room or internal space with other opened flued appliance, then the size of the air vent necessary should be calculated in accordance with BS 5440-2 Table 2.

## 4 FLUE TERMINAL POSITION

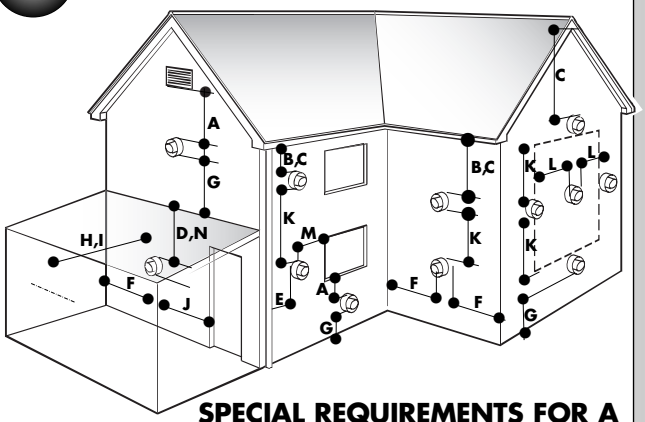


**SPECIAL REQUIREMENTS FOR A VERTICALLY BALANCED FLUE**

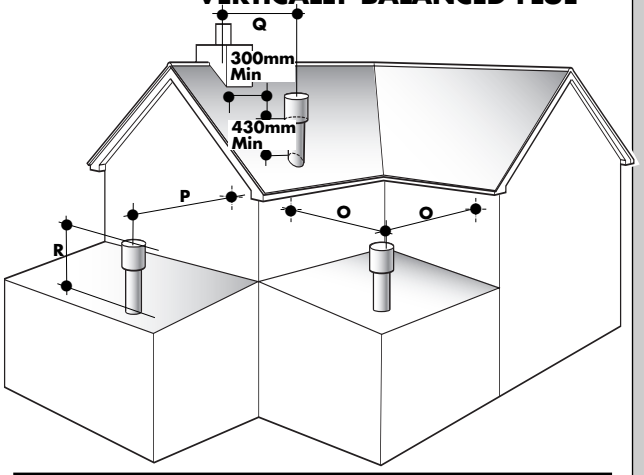


| | Position | Minimum spacing | |
|---|---|---|---|
| **A** | Directly below an openable window, air vent, or any other ventilation opening | 300mm | 12in |
| **B** | Below gutter, drain/soil pipe | 75mm | 3in |
| **C** | Below eaves | 200mm | 8in |
| **D** | Below a balcony | *600mm | 98in |
| **E** | From vertical drain pipes and soil pipes | 150mm | 6in |
| **F** | From internal or external corners | +300mm<br>*1000mm | 12in<br>40in |
| **G** | Above adjacent ground or balcony level | 300mm | 12in |
| **H** | From a surface facing the terminal | +600mm<br>*2500mm | 24in<br>98in |
| **I** | Facing terminals | +1200mm<br>*2500mm | 48in<br>98in |
| **J** | From opening (door/window) in carport into dwelling | *not recommended | |
| **K** | Vertically from a terminal on the same wall | 1500mm | 60in |
| **L** | Horizontally from a terminal on the same wall | 300mm | 12in |
| **M** | Adjacent to opening | 300mm | 12in |
| **N** | Below carport | *not recommended | |
| **O** | From adjacent wall | 600mm | 12in |
| **P** | From adjacent opening window | 300mm | 40in |
| **Q** | From another terminal | 600mm | 24in |
| **R** | Minimum height | 300mm | 12in |

* Recommended by the boiler manufacturing industry to prevent pluming nuisance and damage to buildings.
+ Distances, if plume diverter kit is fitted.

## 3.5 CONDENSATE DISPOSAL

The boiler includes a condensate trap that prevents the combustion products entering the drain; however an additional trap is required, a seal of at least 75mm and an air break of at least 75 mm between the traps (Fig. 5).

The condensate drain connection is suitable for 19mm I/D plastic push fit or adhesive overflow pipes and fittings.

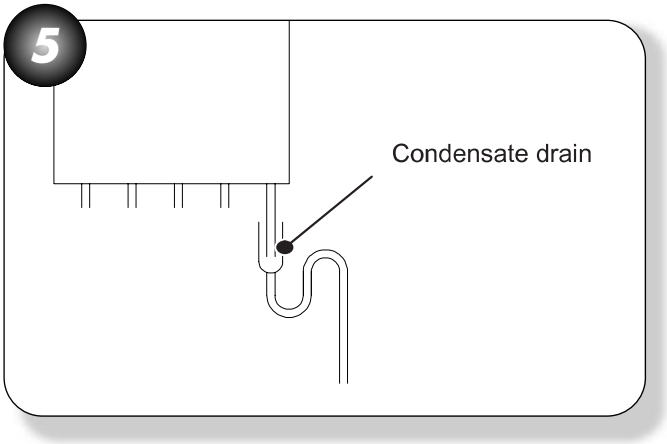


It should be piped to drain, preferably within the building, maintaining a continuous 2.5° (45 mm/m) fall away from the appliance. If the drain is routed to outside it should be to a drain or soak away, and any external pipe work should be in 32 mm. Insulation to protection from freezing in cold weather conditions is also advisable. Note if the appliance is installed in a garage all pipe work should be in 32 mm. Ensure that the condensate discharge system complies with any local regulations in force.

## 3.6 GAS SUPPLY

**a)** The Gas Supplier should be consulted at the installation planning stage in order to establish the availability of an adequate supply of gas.

**b)** An existing service pipe MUST NOT be used without prior consultation with the Gas Supplier.

**c)** A gas meter can only be connected by the Gas Supplier or by their contractor.

**d)** An existing meter and/or pipe work should be of sufficient size to carry the maximum appliance input plus the demand of any other installed appliance. (BS 6891: 1988 or I.S.813 in Ireland).

**A minimum of 22 mm diameter pipe work is recommended within 1000 mm of the appliance gas cock.**

**e) Natural gas appliances:** The governor at the meter must give a constant outlet pressure of 20 mbar (8 in.wg) when all appliances on the system are running.

**f)** The gas supply line should be purged. **WARNING:** Before purging open all doors and windows, also extinguish any cigarettes, pipes, and any other naked lights.

**g)** The complete installation must be tested for gas tightness.

## 3.7 CENTRAL HEATING SYSTEM

**a)** The appliance incorporates all the components necessary to allow it to be connected to a sealed central heating system. Refer to Fig. 8 for a typical system design, which incorporates radiators, and a drain facility that must be provided at the lowest point in the system to allow complete drain down.

**b)** The installation should be designed to operate with a flow temperature of up to 95°C.

**c)** A sealed system must only be filled by a competent person.

**d)** The available pump head for the appliance is given in Fig. 6.

**e)** If thermostatic radiator valves are fitted, a radiator must be fitted with two lock shield valves, to enable correct operation of the pump-overrun facility.

**f)** The following paragraphs outline the specifications of the items fitted to the appliance.

**PUMP** – The available pump head shown in Fig. 6 is that in excess of the appliance hydraulic resistance, i.e. that available for the system.

6

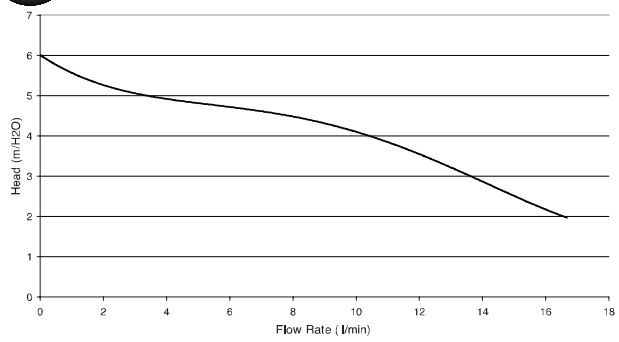


**EXPANSION VESSEL –** The integral expansion vessel is pre-charged to a pressure of between 0.5 and 1.0 bar. This should be checked before the water system is filled. Details below show the water system volume that is acceptable for this vessel. If the system water volume is larger then an additional vessel must be fitted to the system. BS 5449 and BS 6798 give further details regarding expansion vessel sizing and sealed systems.

7

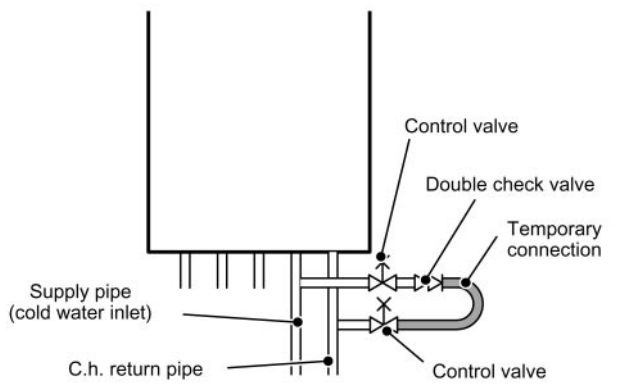


**Expansion Vessel Requirements**

| Vessel charge and initial system pressure | bar | 0.5 | 0.75 | 1.0 | 1.5 |
|---|---|---|---|---|---|
| Total water content of system using 8 L (1.54 gal) capacity expansion vessel supplied with appliance. | L | 96 | 84 | 73 | 50 |
| For systems having a larger capacity multiply the total system capacity in litres (gallons) by these factors to obtain the total minimum expansion vessel capacity required in litres. | | 0.0833 | 0.093 | 0.109 | 0.156 |

**PRESSURE GAUGE –** A pressure gauge is situated on the appliance control panel.

**PRESSURE RELIEF VALVE –** A pressure relief valve set to 3 bar (43.5 psi) is supplied with the appliance; however it will start to open at approximately 2.7 bar. It should not be used to flush the system.

**FILLING LOOP -** This boiler is not fitted with a filling loop. Any filling loop being fitted should comply with the water supply (water fittings) regulations 1999 Section 24.

**A filling loop should be fitted as shown in Fig. 7.**

**WATER TREATMENT, CLEANSING AND FLUSHING THE HEATING SYSTEM**

**NOTE:** *British Standard BS7593: 1992 stresses the importance of cleansing and flushing of the system to ensure it continues to run efficiently with the minimum of maintenance necessary. We fully support this professional approach and recommend that the system is cleansed with an effective chemical cleanser and protected long term with a suitable inhibitor. Such products are available from Fernox and Sentinel.*

**CONTROLS.** As a minimum it is recommended that a room thermostat be installed to control the appliance. Thermostatic radiator valves may be fitted to the system; however they must not be fitted in the room where the room thermostat is fitted. There must be at least one radiator installed with lockshield valves that should not be closed. Further guidance can be obtained from the Domestic Heating and Hot Water Guide to the building regulations.

## 3.8 DOMESTIC HOT WATER SYSTEM

**a)** Check that the mains water pressure is sufficient (as stated in 2.2 "Performance Data" – min 0.3 bar) to produce the required DHW flow rate, but does not exceed the maximum DHW pressure (10 bar). If necessary, a pressure-reducing valve must be fitted to the mains supply before the DHW inlet connection.

**b)** The final 600 mm (24 in) of the mains supply pipe to the boiler must be copper.

**c)** Avoid long DHW pipe runs and several hot water draw off points.

**d)** Insulate the hot water pipes if accessible to minimise the heat losses within the pipes to keep the water hot longer.

**e)** A domestic hot water regulator is not fitted within the appliance to control the maximum water flow rate. However, if the flow rate is too high a 12 l/min flow rate regulator can be fitted as an optional extra.

**f)** In areas where the water is 'hard' (i.e. more than 200 ppm total hardness as defined by BS 7593: 1993 Table 2) it is recommended that a proprietary scale-reducing device is fitted into the boiler cold supply, within the requirements of the local water company.

**DOMESTIC HOT / COLD WATER SUPPLY TAPS AND MIXING TAPS.** All equipment designed for use at mains water pressure is suitable.

**SHOWERS & BIDETS.** Any mains pressure shower or bidet complying with the Local Water Undertaking byelaws is suitable.

## 3.9 ELECTRICITY SUPPLY

**a)** Wiring external to the appliance must be in accordance with the current I.E.E Wiring regulations (BS 7671) for electrical installation and any local regulations, which apply.

**b)** For Ireland (IE), refer to I.S.813.2002 and the current ETCI rules for electrical installations.

**c)** The mains cable **must be at least 0.75 mm²** (24/0.2 mm) PVC insulated to BS 6500 table 16.

**d) THIS APPLIANCE MUST BE EARTHED.** Failure to provide a satisfactory earth connection will result in appliance malfunction.

**e)** The method of connection to the mains supply must facilitate complete electrical isolation of the appliance. Either a 3A fused three pin plug and un-switched shuttered socket outlet, both complying with BS 1363, or a 3A fused double pole switch having a 3 mm contact separation in both poles and serving only the boiler (and its external controls) may be used.

## 3.10 EXTERNAL CONTROLS

The Maxol Supacombi HE may be used with any certified mains voltage room thermostat, as described in section 4. For further information contact: Technical Help line: 01926 834834.

## 9 WALL MOUNTING

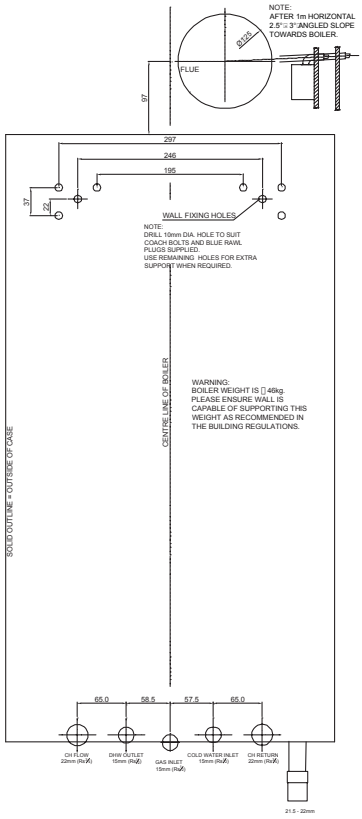


## 8 TYPICAL SYSTEM DESIGN

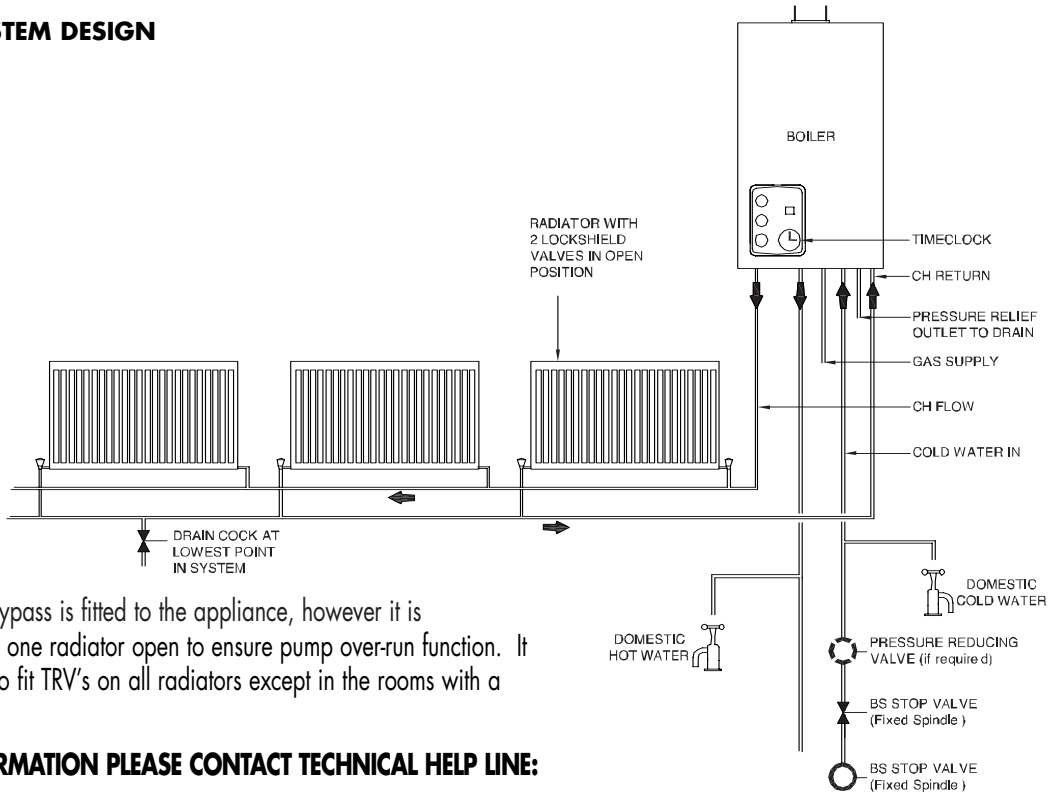


**Note:** An automatic bypass is fitted to the appliance, however it is recommended to leave one radiator open to ensure pump over-run function. It is also recommended to fit TRV's on all radiators except in the rooms with a room thermostat.

**FOR FURTHER INFORMATION PLEASE CONTACT TECHNICAL HELP LINE: 01926 834834**

# 4 APPLIANCE INSTALLATION

Before installing the appliance, check that the chosen location is suitable (section 3.2) and that the requirements for flue position (section 3.3) and minimum clearances (Fig. 1) are satisfied.

## 4.1 UNPACKING THE APPLIANCE

The appliance is supplied in one box. Flue kits are provided separately, the various flue kits available are described in section 2.5. If the appliance is to be installed without access to an external wall, a wall liner kit is also required.

Unpack the boxes and check the contents:

- Complete appliance
- Paper wall mounting template
- Wall mounting plate
- Installation and Servicing Instruction
- User's Instructions
- Hardware pack containing:
  6 x 65 mm wood screws – 2 off
  Blue wall plugs – 2 off
  Flue seal

**Manual Handling Note:** During the appliance installation it will be necessary to employ caution and assistance whilst lifting, as the appliance exceeds the recommended weight for a one-man lift. Take care to avoid trip hazards, slippery or wet surfaces.

## 4.2 PREPARING THE WALL

**a)** Fix the paper template in the required position (ensuring that the necessary clearances are observed). Ensure squareness by hanging a plumb line.

**b)** Mark the position of the largest wall fixing holes. Refer to Fig. 9.

**c)** Mark the position of the flue outlet. For side flue installation extend the flue centre line on to the sidewall, where the flue length exceeds 775 mm, a flue slope angle of 2.5° needs to be taken into account. Refer to Fig. 10. Remove the paper template.

**d)** Cut the hole in the wall for the air/flue duct (preferably with a core-boring tool). The hole must be horizontal and not be less than 100 mm in diameter. If the hole is not accessible from outside, its minimum diameter must be sufficient to allow insertion of the wall liner (130 mm, 5⅛ in). The wall liner is available as an optional extra and must be sealed in position with mortar (or equivalent).

**e)** Drill the two largest fixing holes using a 10mm drill and insert the blue wall plugs provided. (Ensure the provided wall plugs are suitable for the wall to be fixed to, if not, use suitable wall plugs). Further holes can then be drilled should additional support be required for the boiler. Screws and wall plugs are not supplied for this.

**f)** Hang the wall mounting plate using the two large fixing screws supplied, ensuring that it is level. Refer to Fig. 9.

**g)** Fit any additional fixing screws into wall plugs and tighten all screws.

*As standard the pipe work may only be routed from below.*

**10**

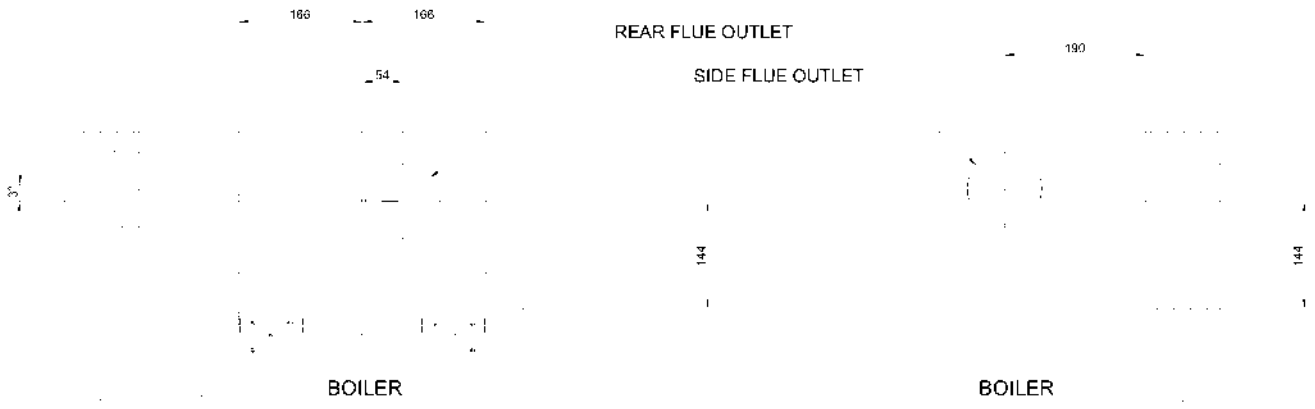

## 4.3 MOUNTING THE APPLIANCE

**a)** Remove all casing panels (see section 6.2)

**b)** Take the protective caps off the boiler pipework.

**c)** Lift the appliance into position as shown in Fig. 11. Position the top of the appliance approximately 10mm above the top of the wall mounting plate and use the side wings on the plate to locate the appliance in a horizontal direction. Then carefully lower the appliance, ensuring that the four locating tabs are securely engaged.

**11 MOUNTING THE APPLIANCE**

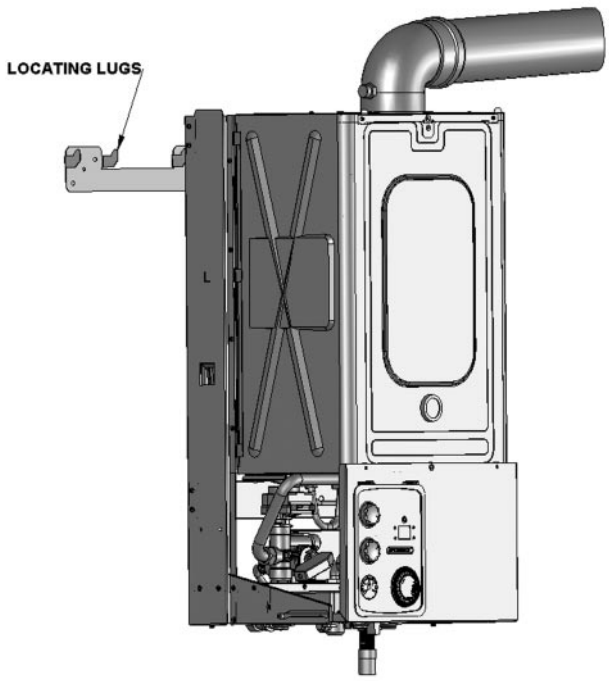


## 4.4 CENTRAL HEATING & DOMESTIC HOT WATER SERVICE CONNECTIONS

**Refer to Figure 12.**

**a)** Connect the central heating system pipes to the central heating flow and return valves, using 22mm pipe work.

**b)** Connect the mains water supply to the DHW inlet isolating valve.

**c)** Connect the DHW supply pipe to the DHW outlet pipe connection.

Commission the central heating system and domestic hot water system, as described in section 5.1, and then proceed to section 4.5.

## 4.5 GAS CONNECTION

**Refer to Figure 12.**

Connect the gas supply pipe to the gas service cock using 15mm copper pipe and the 15mm nut and olive supplied. Within 1000mm of the gas service cock it is recommended that the pipe diameter is stepped up to a minimum of 22mm diameter copper pipe.

**12 VIEW OF CONNECTIONS ON REAR OF BOILER**

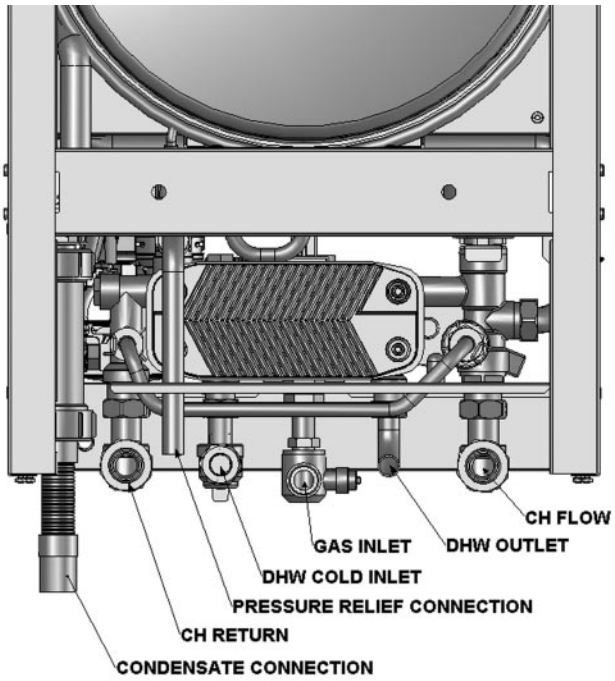


## 4.6 CONDENSATE CONNECTION

**Refer to Figures 12 and 13.**

Connect preferably a 19mm I/D plastic push fit or adhesive overflow pipe to the condensate outlet. It should be piped to drain, preferably within the building, maintaining a continuous 2° fall away from the appliance.

**Note:** if an additional "U" trap is fitted between the appliance and the discharge point, then a visible air break is necessary between the appliance and trap, because a trap is already provided within the appliance. 32 mm pipe should be used for external pipe work, or if the appliance is installed in a garage.

If the drain is routed externally to a drain or soak away, then the external length should be kept as short as possible and not exceed 3000 mm. Protection from freezing in cold weather conditions is also advisable. Ensure that the condensate discharge system complies with any local regulations in force.

The drain pipe material should be resistant to acid with a pH less than 6.5. Suitable materials for the condensate drainage pipe are PVC, UPVC, ABS, PP or PVC-C.

In exceptional circumstances, such as when a boiler is installed in a basement without drainage, it may be necessary to install a condensate pump to carry condensate up to ground/drain level. Such products are available from Grundfos Pumps Ltd on: 01525 850000 and Pump House on: 0115 922 2211.

13

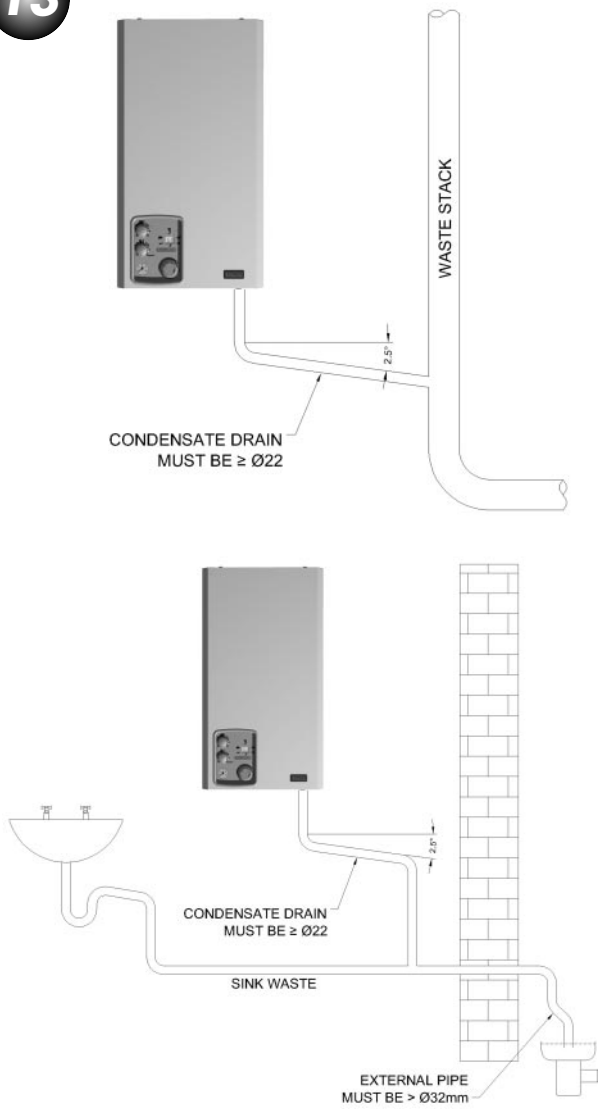


## 4.7 PRESSURE RELIEF VALVE CONNECTION

**Refer to Figure 12.**

The pressure relief valve and discharge pipe is located at the bottom RHS of the appliance. Continue the discharge pipe provided using no less than 15mm diameter copper pipe to the outlet. The pipe outlet should be positioned so that the discharge of water or steam can be noticed, but cannot create a hazard to the occupants of the premises or damage electrical components or wiring.

## 4.8 AIR / FLUE DUCT INSTALLATION

For correct flue installation please refer to the installation instructions that are provided with the individual flue kits as described in section 2.5.

Measure the required flue length as shown in Fig. 14.
Refer to section 2.5 to determine whether any extension kits are required. Installations using only the standard ducts or standard ducts with straight extensions are described in this section. Installation instructions for all other flue systems are included in the various flue kits.

**IMPORTANT:** Ensure the flue seal supplied in the fittings bag is fitted to the flue outlet at the top of the boiler (recuperator).

**a)** Ensure that all (inner and outer tube) sealing rings are provided and assemble the air/flue ducts as shown in the flue instructions.

**b)** Construct the correct flue length by building the flue outside the appliance.

**Ensure that the flue and air seals are correctly fitted before assembly and that each section is fully engaged, and that the flue seal supplied in the fittings bag is fitted to the flue outlet at the top of the boiler (recuperator).**

*The flue length is measured from the centreline of the appliance flue outlet to the inside of the external wall-sealing ring. In most cases it will be possible to achieve the required flue length without cutting the ducts, however where necessary the plain ends of the extension ducts may be cut. Never cut the swaged end, and always ensure that the cut is square and free of burrs or debris.*

**NOTE IT IS ESSENTIAL THAT THE TERMINAL IS FITTED THE CORRECT WAY UP**
*See flue kit Instructions (i.e. rain shield at the top).*

14 **MEASURING THE EXACT FLUE LENGTH**

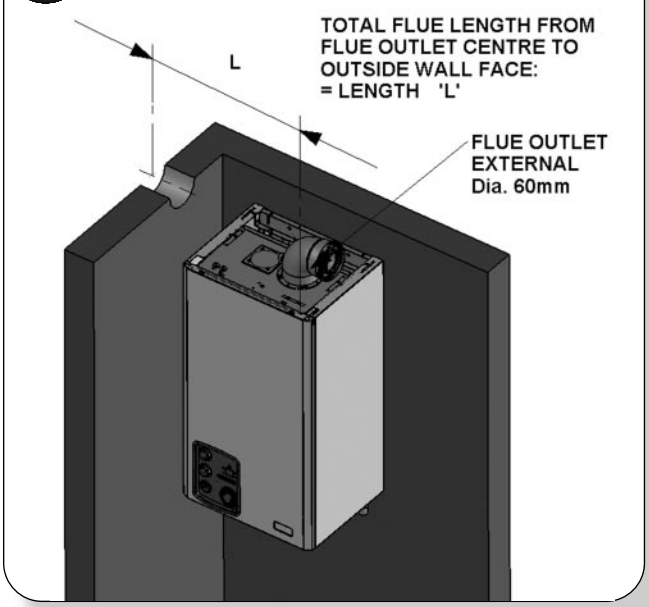

## 4.8.1 INSTALLING THE AIR/FLUE DUCT FROM INSIDE THE ROOM

Wall thickness up to 800 mm (31 in) only.

**a)** Push the terminal through the wall liner taking care to ensure that the terminal is the correct way round and the external wall-sealing ring does not become dislodged.

**b)** Assemble the flue system extension ducts as necessary, referring to Fig. 15.

**c)** Pull the flue system towards the appliance to seat the external sealing ring against the outside wall, ensuring that the duct joints are not disturbed.

**d)** Use the internal sealing ring to make good the internal hole, and check that the terminal is correctly located on the outside wall (Where possible this should be visually checked from outside the building.) Fig. 15 shows a view of the flue system, correctly installed.

**e)** Finally locate and secure the elbow to the appliance using the four screws provided.

## 4.8.2 INSTALLING THE AIR/FLUE DUCT FROM OUTSIDE THE BUILDING

(Flue hole diameter 100 mm – wall liner not necessary)

**a)** Secure the flue elbow with seal to the appliance using 4 screws.

**b)** Fit external wall sealing ring over flue and then from outside the building, push the flue system through the wall taking care to ensure that the terminal is the correct way around.

**c)** Loosely fit the internal wall sealing ring over the inside end of the flue.

**d)** Assemble the flue system extension ducts as necessary, referring to the flue kit instructions, and fit to the flue elbow.

**e)** Fit the flue terminal to the flue system, ensuring that the duct joints are not disturbed, and that the external sealing ring is seated against the outside wall.

**f)** Finally use the internal sealing ring to make good the internal hole. Check that the external wall sealing ring and the terminal is correctly located, on the outside wall from outside the building.

**15** **INSTALLING THE FLUE SYSTEM FROM INSIDE THE ROOM**

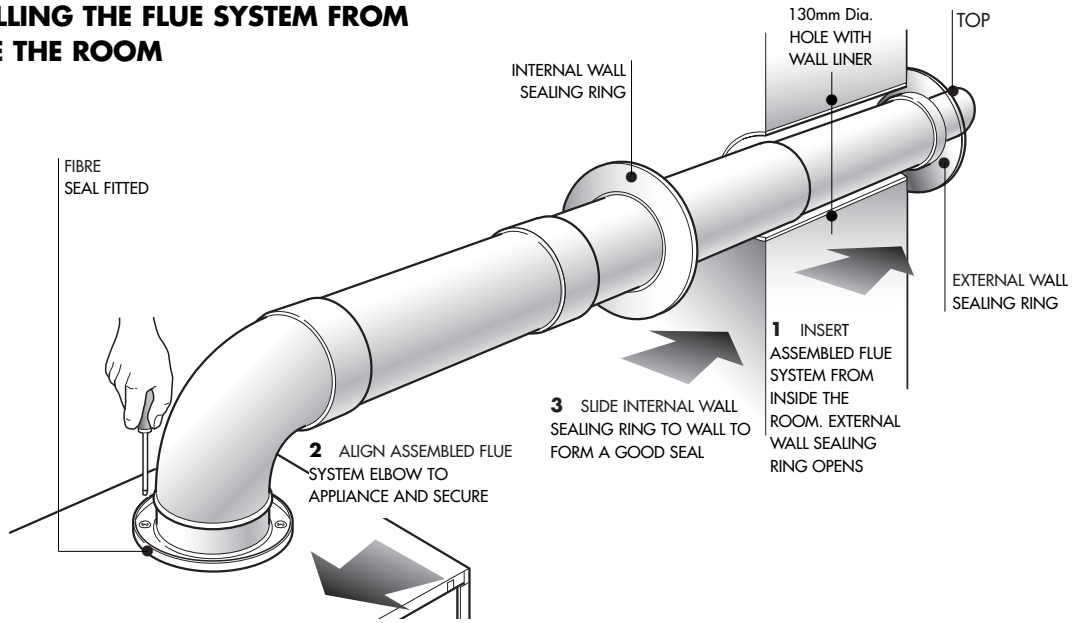


## 4.9 ELECTRICAL CONNECTIONS

Connect the electricity supply and external controls (using suitable mains cable) as follows:

Wire the cable(s) into the appropriate connections in the terminal block provided, referring to Fig. 16. Live supply to L1, Neutral and Earth as indicated. Check that L2 and L3 are linked.

To provide correct cable retention, fit the cable through the clamping arrangement. The cable will be held in position as the clamp is screwed into place.

If a programmer/room thermostat is to be fitted remove the red link between L2 and L3 and connect the device across these terminals. Any external controls fitted must be rated at 230V~50Hz and have volt free contacts.

L1 = PERM LIVE N = NEUTRAL

L2 = STAT OUT ⏚ = EARTH

L3 = STAT IN

**16**

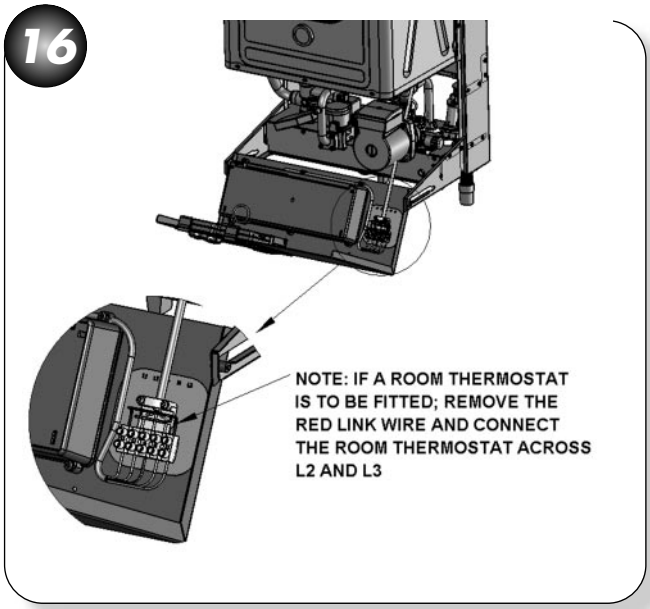

# 5 COMMISSIONING & TESTING

## 5.1 FILLING THE WATER SYSTEM

**WARNING: The commissioning of this boiler and system must only be undertaken by a professionally qualified person in accordance with the requirements of the Gas Safety Installation and Use Regulations and be approved by CORGI.**

**Ensure that the Benchmark Log Book is satisfactorily completed during the commissioning process. The Log Book is located at the end of this manual. This manual should be handed to the User following completion of the installation and commissioning process. Failure to comply with these requirements may invalidate the manufacturers guarantee.**

**For Ireland (IE), it is necessary to complete a "Declaration of Conformity" to indicate compliance to I.S.813.2002.**

Before commissioning the appliance, the whole gas installation including the meter **MUST** be purged and tested for gas tightness in accordance with BS 6891: 1998.

*Open all doors and windows, extinguish naked lights, and **DO NOT SMOKE** whilst purging the gas line.*

Before commencing the commissioning procedure, ensure that the gas service cock is turned on, the electricity supply is isolated, and that the CH and DHW pipe-work is complete. Fill the water systems by following the procedure detailed below steps 1 to 5, and referring to Figure 17.

*It is recommended, where possible, to flush the CH system without the appliance connected, to avoid debris and flux blocking the waterways within the appliance.*

17

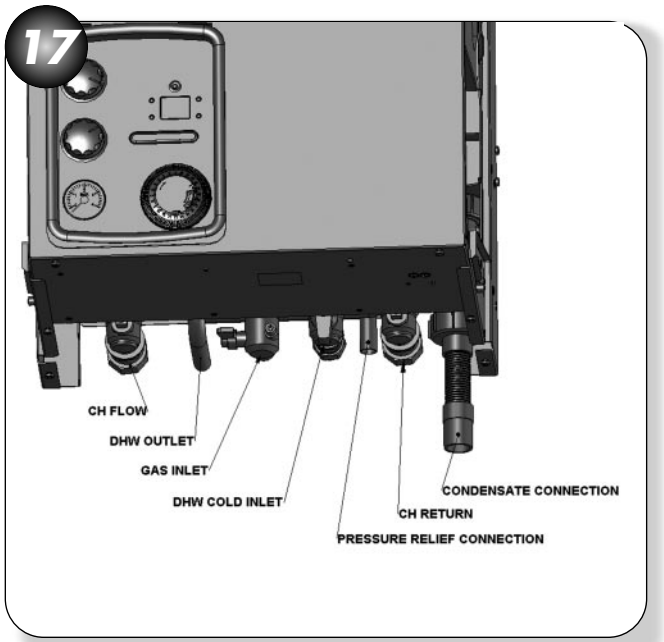


**1)** Check that the CH flow and return valves are in the open position and unscrew the cap on the automatic air vent (Fig. 18) one full turn and leave open permanently.

**2)** Fill the system with water using the method described in section 3.7 to about 2.0 bar. Vent the system via the radiator valves and system air vents in accordance with normal practice. Ensure that all system air vents are closed.

**3)** Check the system for soundness.

**4)** Check the operation of the pressure relief valve (Fig. 18) by rotating the plastic head anticlockwise 1/4 of a turn and checking that water is discharged. Ensure that the valve seats correctly and does not leak. If the valve leaks or is stuck closed, replace it.

**5)** Drain the entire system using the manual drain valve (Fig. 18), to flush out any debris, and refill to 0.2 bar above the system design pressure (between 0.3 and 3.0 bar) by repeating the above procedure. Follow the commissioning procedure described below, and then repeat this instruction with the system hot. It is recommended that the system is cleaned with a recognised system cleaner such as Fernox or Sentinel.

**6)** Close all DHW taps

**7)** Open the DHW inlet valve and open and close each hot water tap in turn to clear all the air from the pipes and the appliance.

**8)** Remove the pump cap; use a screwdriver to rotate the pump shaft. Replace the cap.

**9)** If a filling loop has been used, disconnect filling loop.

*Do not use the pressure relief valve to drain the system, because dirt or debris could prevent the valve seating correctly. If the valve leaks or sticks closed, then replace it.*

***To drain the system, open the manual drain on the side of the CH flow cock shown in figure 18.***

18

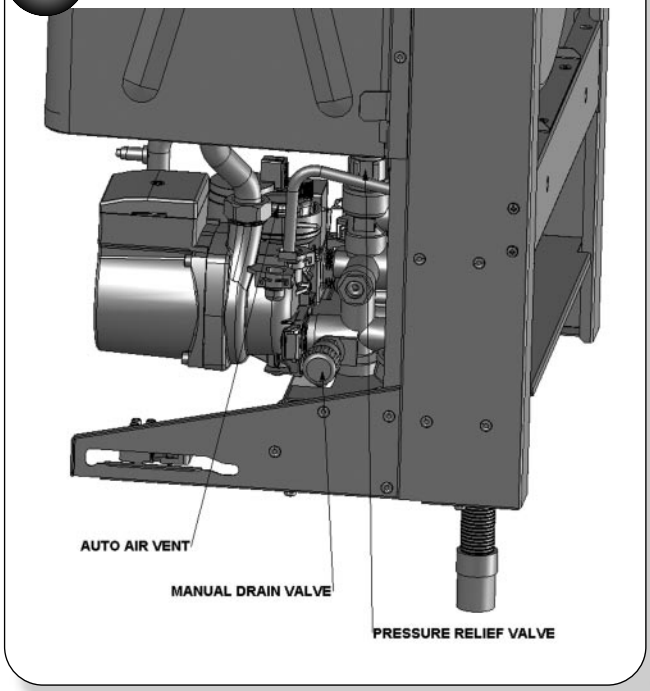

## 5.2 COMMISSIONING THE APPLIANCE

**Refer to Figures 19 & 20**

*If, at any time during the commissioning procedure, it is required to prevent the appliance from modulating, set the CH control knob to the Service position (fully clockwise).*

**a)** Check that the gas supply is turned ON and the gas service cock is OPEN.

**b)** Slacken the screw in the gas cock inlet pressure test point and connect a suitable manometer. Refer to Fig. 20.

**c)** Turn both control knobs fully anticlockwise to the standby position ⏻.

**d)** Switch on the electrical supply. The display reads '||||', followed by the current CH temperature.

**e)** Turn the CH and DHW control knobs to the desired temperature position and fully open any DHW tap. The fan should start and after a few seconds ignition will commence.

**f)** If the burner fails to light the fan will stop. Initially this may be due to air in the gas supply line. The boiler will automatically have five attempts at ignition. It may be necessary to press the reset button and repeat. (See section 5.5).

**g)** When the boiler has lit the display will show the boiler temperature and the flame light will come on. Check that the gas supply pressure measured at the appliance inlet pressure test point is 20 ± 1 mbar for natural gas. (See Fig.20).

*If the gas inlet pressure is outside the required value check that the gas pipe is of the correct diameter or contact the gas provider to adjust the gas meter governor.*

*Please note that the appliance incorporates advanced DICOM (Digitally Controlled Combustion) electronics which means that there is no requirement for manual gas valve adjustment or checks. DICOM makes it possible to control the gas valve completely by the electronic board.*

Close the DHW tap and ensure that the burner goes out (the display reads the current CH temperature) and the pump stops after an over-run period of 2 minutes. **NOTE**: The burner may run on for a few seconds (keep-hot function - see section 5.8)

**h)** Ensure that the room thermostat (if fitted) or timeclock is calling for heat. Turn the clock override switch to the 'I' position. The ignition sequence will commence and when flame is detected the display will show the CH set temperature in °C, the CH demand light will be lit and the flame light will light.

**i)** Set the clock to the desired times by setting the tabs as shown.

**j)** Slide the clock override switch to the 'timed' position and check the operation of the clock and room thermostat (if fitted).

**19**

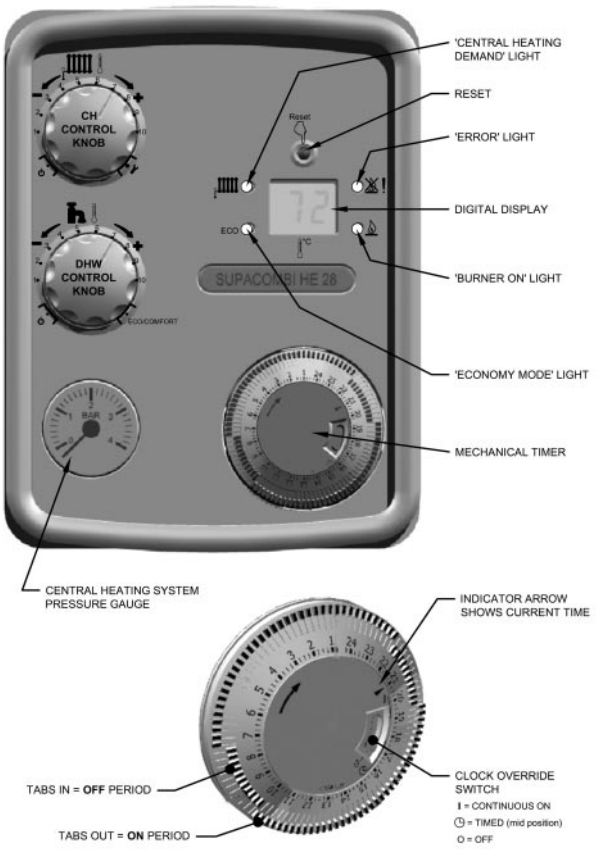


**20**

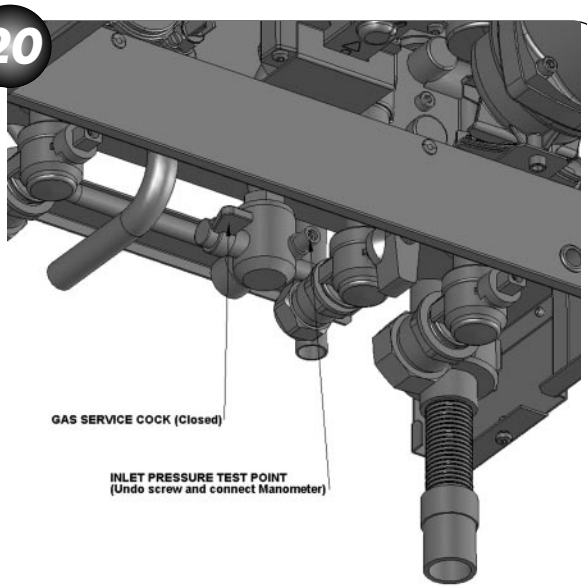


**THIS BOILER IS FACTORY SET SO THAT NO COMBUSTION OR GAS BURNER PRESSURE CHECKS ARE REQUIRED. HOWEVER, IF THE APPLIANCE FAILS TO OPERATE CORRECTLY, REFER TO SECTION 8.5. FAULT FINDING.**
**IF A COMBUSTION & GAS INLET CHECK IS TO BE CARRIED OUT, REFER TO SECTION 6.1.**

## 5.3 DHW FLOW RATE

Should the mains flow rate be considered to be too high, a flow regulator is available as a spare part which will limit the flow. Refer to section 9.12.

The nominal pre-adjusted flow rate may vary by ± 5% due to factory tolerances and mains water pressure fluctuation.

## 5.4 FINAL CHECKS

**a)** Turn both control knobs fully anti-clockwise to the standby position ⏻ .

**b)** Remove the manometer and tighten the appliance inlet pressure test point screw. Re-light the burner and test for gas tightness.

**c)** Fit the appliance casing as illustrated in Fig. 21. Fit the side panels by hooking over at the top and securing with the screws at the bottom. Fit the front panel in position using locating lugs at the top and sides and screws underneath.

**d)** Set the CH and DHW control knobs to the required temperature setting. Ensure that the clock override switch is in the timed position and check that the time clock is set at the desired time periods. Set the room thermostat (if fitted) to the required setting.

21

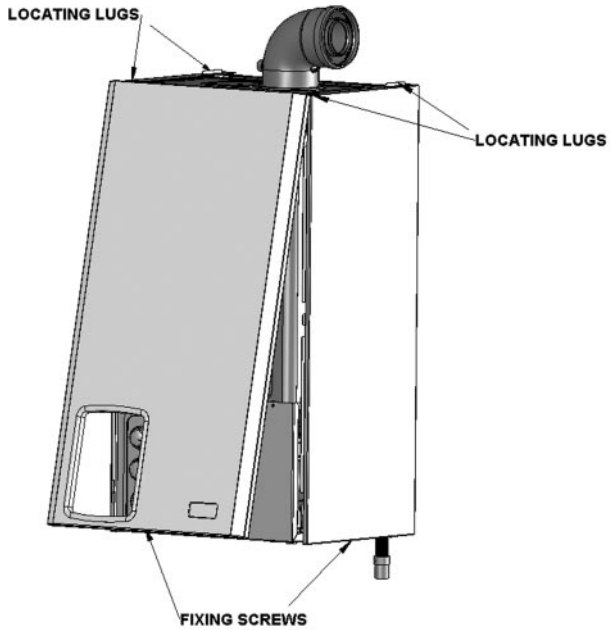


## 5.5 LOCKOUT INDICATION AND RESET THE APPLIANCE

In the event of failure during an ignition sequence, (5 attempts), the digital display displays error code 'Ч' and the error light will be lit. In order to reset, press the reset button (Fig. 19).

## 5.6 FROST PROTECTION

The appliance is fitted with a frost protection device which operates the boiler when the temperature is below 5°C. In the event of very cold conditions, the pump may operate and the appliance light for a few minutes to protect the appliance and system from potential frost damage. This can only function if the gas and electricity supplies are maintained and the appliance is left ON. The time clock can be switched to the OFF setting.

## 5.7 OVERHEAT PROTECTION

The appliance incorporates an overheat thermostat, which monitors the appliance's operating temperature. Abnormal temperatures will cause the appliance to go to lockout, the digital display will show code 'ï' and the error ! light will be lit.

Allow the appliance to cool and press the reset button to clear (Fig. 19).

## 5.8 OTHER FEATURES

The following additional features are included in the appliance specification:

**ANTI-CYCLE DEVICE:**
When the appliance cycles on its central heating control thermostat, a slow cycle device operates. The timer (set to 3 mins) is activated after the end of each burn cycle to prevent rapid cycling of the burner.

**ANTI PUMP SEIZURE DEVICE:**
Providing that a power supply is maintained and the appliance ON/OFF switch is ON, the pump will operate for at least 20 seconds every 24 hours (regardless of heat demand) to prevent pump seizure during periods where the appliance is not used.

**WATER FLOW SWITCH:**
This device prevents the burner from firing if there is inadequate water flow through the main heat exchanger.

**DHW PRE-HEAT: (ECO light OFF)**
DHW **Comfort (Pre-heat)** selected: With no demand for DHW the boiler will fire periodically for a few seconds to maintain the DHW plate heat exchanger in a heated condition. This feature will automatically adjust to the user's habitual requirements. Thus during long periods of no DHW draw-off, e.g. overnight, no pre-heat is provided. DHW **Economy** selected: No pre-heat is provided. **(ECO light lit)**

**KEEP-HOT FACILITY:**
This feature is designed to provide hot water very quickly without wasting too much water. Therefore you may notice that after EVERY hot water draw-off the burner may stay on for a short period of a few seconds. This is to pre-heat the hot water circuit and prepare the appliance for the next hot water draw-off.

**SUMMER MODE:**
To avoid resetting the control knob temperature to O in summer when CH is not required, switch the clock override switch to the **OFF** position.

**SERVICE MODE:**

The appliance enters the SERVICE mode by turning the CH control knob to (full clockwise). The and ECO lights flash. In this mode the appliance runs at the minimum CH output. This mode allows the burner pressures to be measured. To check $CO_2$ emissions at maximum rate turn the control knob back to O and on to again.

After checking emissions, remember to turn the control knob back to O, to enter normal operating mode. The appliance will stay in service mode for 10 minutes and revert to normal operation if left.

## 5.9 USERS INSTRUCTIONS

Upon completion of commissioning and testing the system, the installer must instruct the user in how to operate the appliance by drawing the user's attention to the following:

**a)** Give the 'Users Instructions' to the householder and emphasise their responsibilities under the 'Gas Safety (Installation and Use) Regulations' or rules in force.

**b)** Explain and demonstrate the lighting and shutdown procedures.

**c)** Advise the householder on the efficient use of the system, including the use and adjustment of all system controls for both CH and DHW.

**d)** Advise the user of the precautions necessary to prevent damage to the system, and to the building, in the event of the system remaining inoperative during frost conditions.

**e)** Explain the function of the control knobs, and how to reset the appliance. Emphasise that if cut-outs persists, the appliance should be turned off and the installer or service engineer consulted.

**f)** Stress the importance of an annual service by a registered heating engineer.

**g)** The electrical mains supply to the appliance must remain ON for the frost protection circuit to operate.

## 5.10 APPLIANCE LOG BOOK

A logbook is supplied with this appliance at the back of these instructions to record installation and commissioning details and to make future servicing of the appliance easier.

This logbook forms part of the industry's Benchmark code of practice for the installation, commissioning and servicing of central heating systems.

Please ensure that the logbook is fully completed and left with the customer for future reference, along with Users Instructions and this Installation and Servicing Instruction manual.

# 6 ROUTINE SERVICING

To ensure continued efficient operation of the appliance, it is recommended that it is checked and serviced as necessary at regular intervals. The frequency of servicing will depend upon the particular installation conditions and usage, but in general once a year should be adequate. It is the law that a competent person, such as British Gas or other CORGI registered personnel, must carry out any service work.

Before commencing any service operation, ISOLATE the mains electrical supply, and TURN OFF the gas supply at the main service cock.

Service the appliance by following the full procedure detailed below:

## 6.1 COMBUSTION CHECK

The appliance incorporates a flue sampling point on the appliance flue elbow, or appliance vertical flue adaptor. If suitable equipment to analyse the flue gas is available, remove the sampling cap and fit a 6 mm inside diameter sample tube.

Operate in DHW mode, at full rate. After ten minutes operation check the $CO_2$ /CO values and compare with those figures stated in section 2.3. Do not forget to replace the sampling cap after use.

*If the measured combustion values are significantly outside the figures stated in section 2.3 check heat exchanger blockage, flue blockage, burner cleanliness etc.*

When the appliance is operating at maximum output check that the gas supply pressure is 20mbar, using the inlet pressure test point located on the main gas service cock.

Check also the flame current of the detection electrode (see Fig.23).

Remove casing panels and ease control panel down for access.

Connect a multimeter across connectors of the detection electrode as shown. The measured value shall be approximately 0.7μA (Microamps). If the value is less than stated please clean the electrode with a wire brush.

22

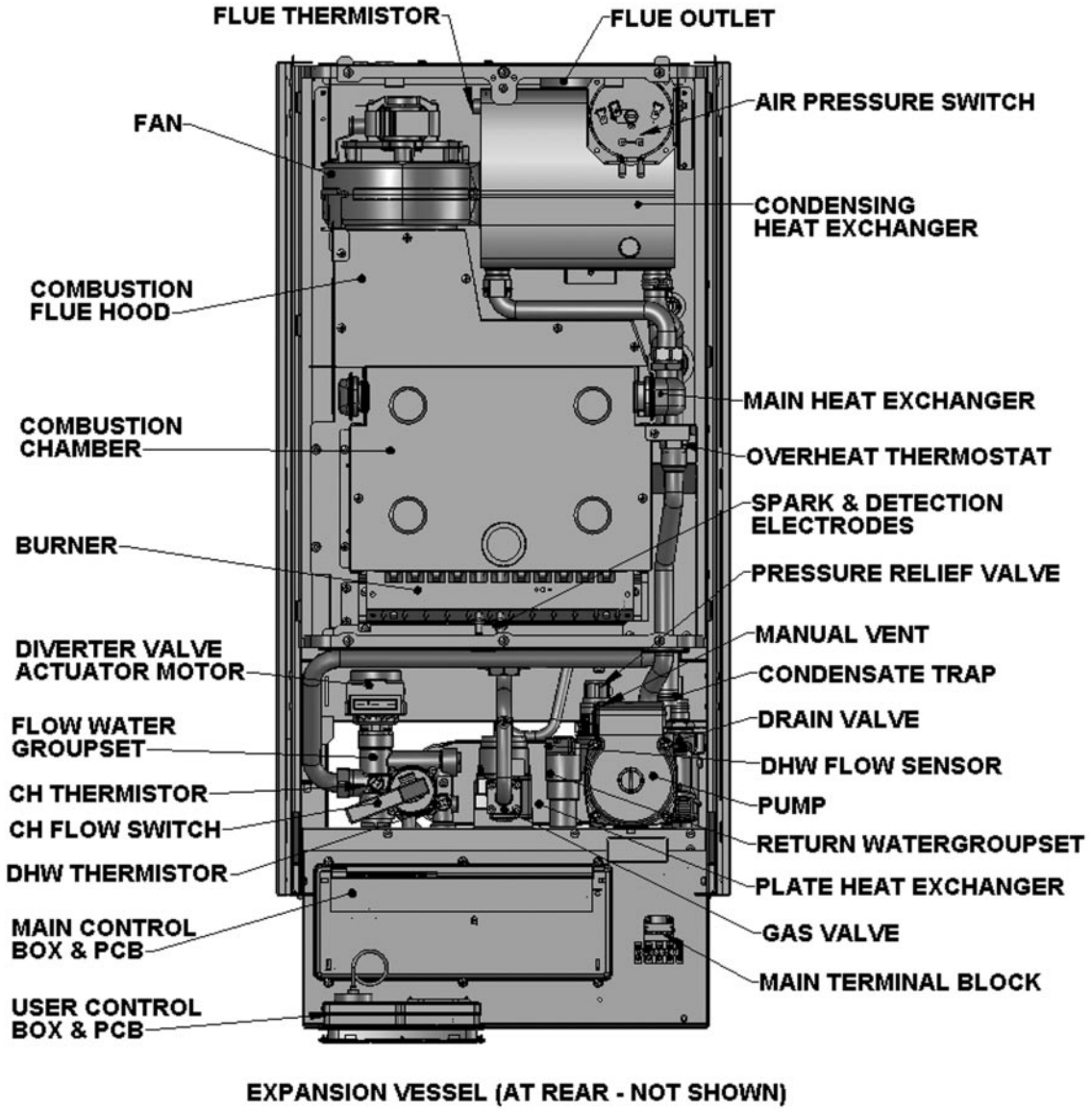

23

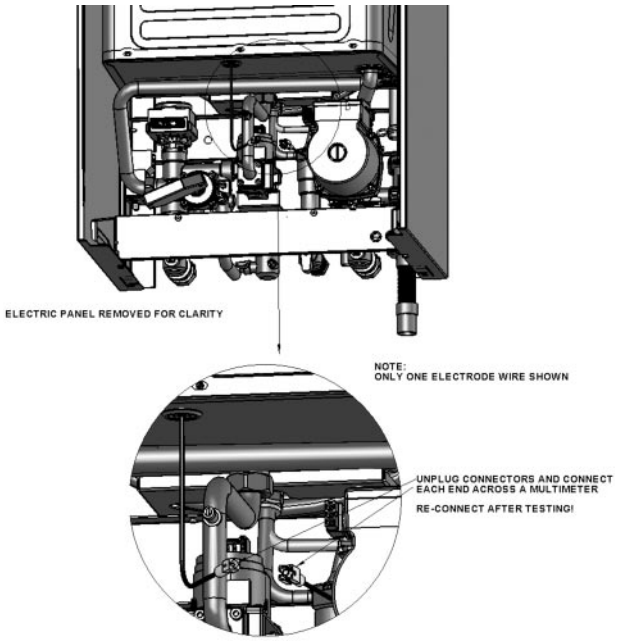


## 6.2 REMOVAL OF CASING PANELS

**Refer to Figures 24, 25 and 26**

**Front panel**

**a)** Remove the 2 screws from underneath and unhook from side panel retaining lugs.

**b)** Lift and remove the panel.

24

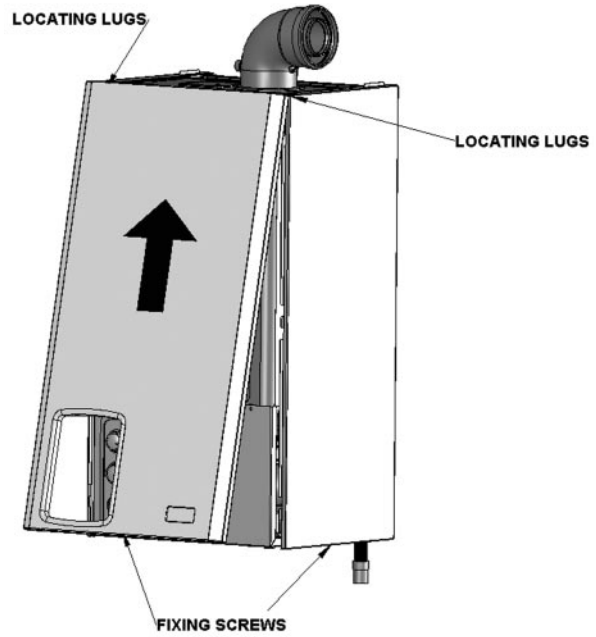


**Side panel**

**c)** Loosen the 4 screws. Swing the bottom of the panels away from the boiler and lift them over the hooks at the top.

25

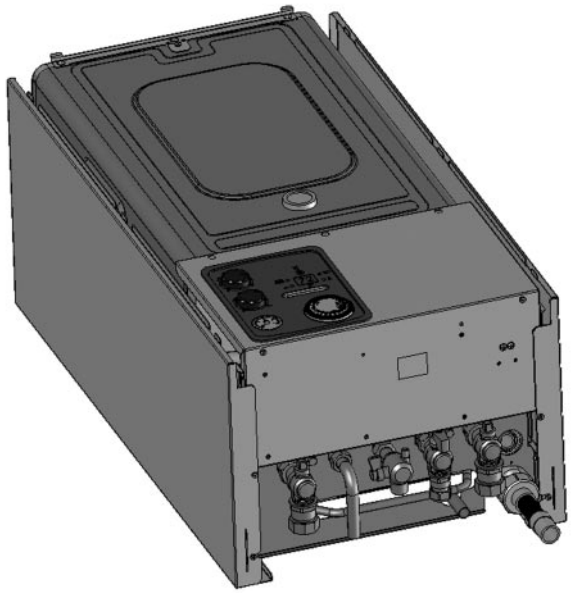

**Combustion chamber lid**

**Refer to Figure 26**

**a)** Remove the 6 screws, gently ease control panel forward and remove combustion chamber lid taking care not to damage the seals.

26

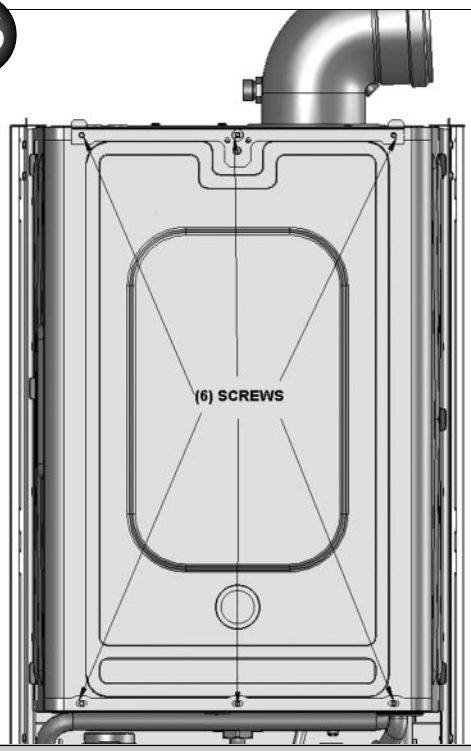


## 6.3 BURNER REMOVAL & CLEANING

**Refer to Figures 27, 28 and 29**

**a)** Undo screws A and remove the fan holder bracket B and combustion chamber panel C.

**b)** Remove the screws D and the baffle E.

**c)** Disconnect the ignitor and detection electrodes.

27

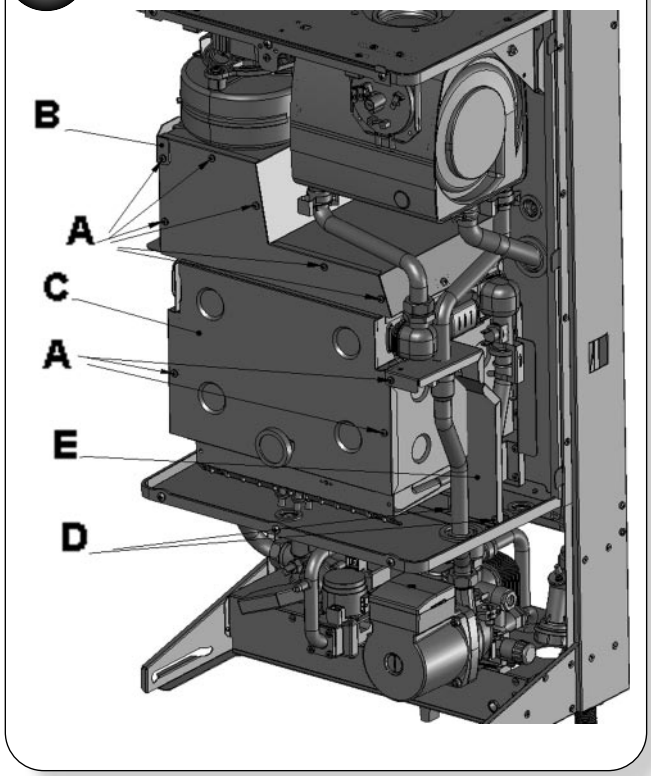


**d)** Undo the 4 screws F holding the burner and remove.

**e)** Inspect, and if necessary clean the main burner ports using a soft brush or vacuum cleaner, ensuring that the flame ports are not obstructed.

28

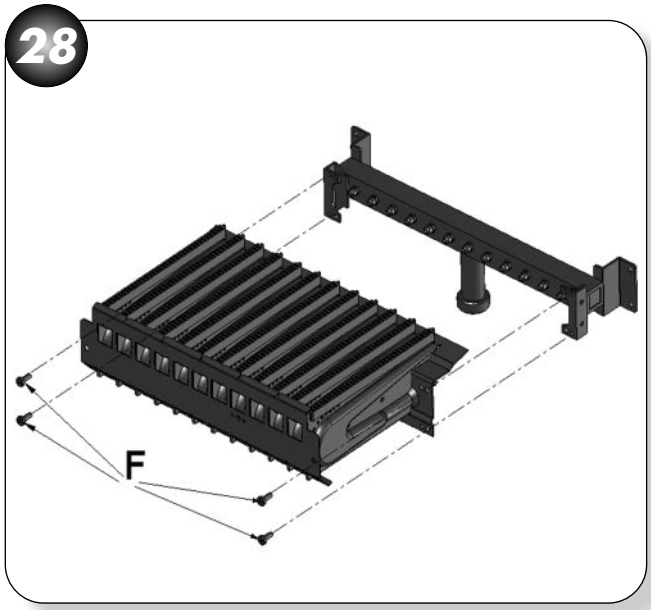


**Note: Do not use a wire brush or any abrasive material.**

**f)** Inspect the spark and detection electrodes. Ensure they are clean and in good condition; replace if necessary.

**g)** Finally, before replacing, check that the spark and detection gaps are correct.

29

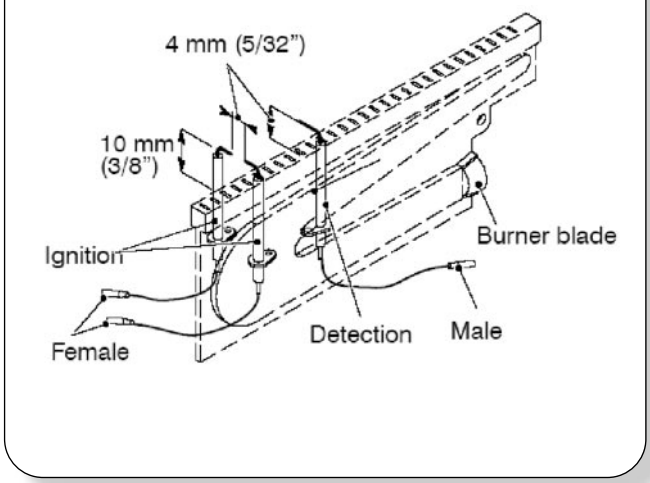


## 6.4 GAS RATE CHECK

**a)** After servicing, check the gas rates against section 2.2 or the data plate.

**b)** If the gas rates are incorrect ensure the inlet pressure, with the appliance running, is correct.

**c)** If the gas rates are still incorrect contact: Technical Help line: 01926 834834.

## 6.5 CLEANING THE PRIMARY HEAT EXCHANGER

**a)** Place a sheet or newspaper beneath the heat exchanger and remove all visible loose deposits from the heat exchanger fins, using a soft brush or vacuum cleaner.

## 6.6 CONDENSATE DRAIN

*The condensate trap allows the discharge of the condensate via the drain while avoiding the escape of combustion products.*

*A plastic ball closes the trap should the trap be empty.*

*If the drain is blocked the condensate level rises, the electrode contacts the water sending the boiler to lockout on flame loss.*

**a)** The condensate drain has a removable cap, Fig. 29, which allows the removal of debris that may be caught within it. Place a bowl under the cap to catch the condensate and remove the cap. Any debris inside will be expelled at this point. Replace the cap ensuring a good seal is made. Discard the condensate and debris.

**b)** Check the soundness and integrity of the condensate drain pipe.

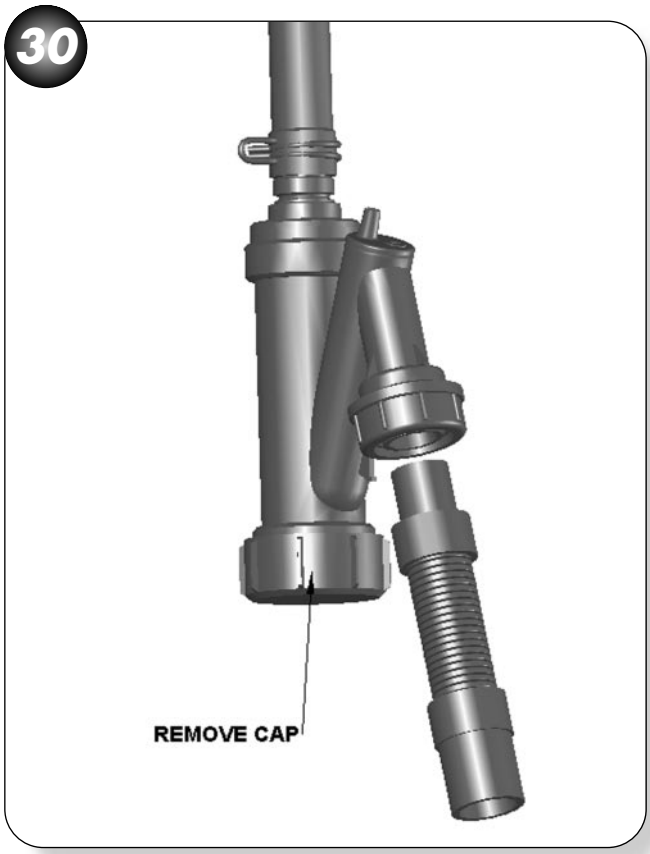


## 6.7 RE-ASSEMBLY

Re-assemble the boiler in the following order:

**a)** Refit the burner.

**b)** Reconnect the electrodes.

**c)** Refit the combustion chamber panel and the fan holder bracket.

**d)** Refit the inner case cover.

**IMPORTANT.** Ensure the boiler sealing panel is correctly fitted and that a good seal is made.

**e)** Refit the boiler side and front panels.

**f)** Turn on the gas supply at the gas service cock and check for gas soundness.

**g)** Reconnect the electrical supply.

## 7.1 : FUNCTIONAL FLOW WIRING DIAGRAM

31

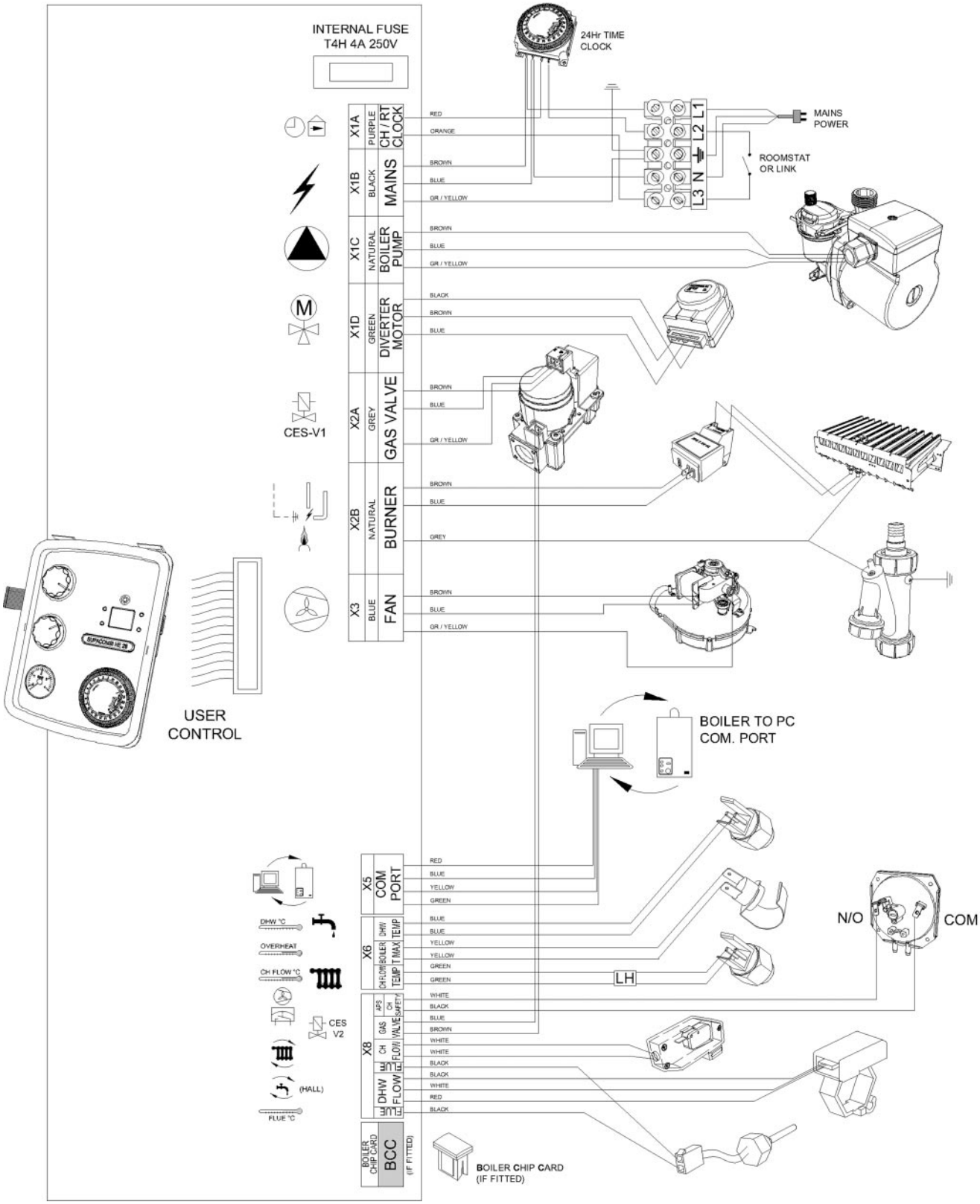

# 8 FAULT FINDING

## 8.1 GENERAL

Before looking for a fault condition, check that:

- The mains electrical supply is turned on.
- The clock, room thermostat or programmer (where fitted) are calling for heat.
- The gas service cock is open.
- The CH and DHW isolation cocks are open.
- The system is at design pressure.

Before attempting any electrical fault finding, always conduct the preliminary electrical system checks as described in the Instructions for the British Gas Multimeter, or other similar instrument.

On completion of any service or fault finding operation involving making or breaking electrical connections, always check for EARTH CONTINUITY, POLARITY and RESISTANCE TO EARTH.

Detailed procedures for replacing faulty components are described in section 9 (Parts Replacement).

For further information contact: Technical Help line: 01926 834834

## 8.2 DIAGNOSTIC INDICATORS

**FASCIA PANEL - Refer to Figures 32 & 33.**

The Digital Display may show an error code in a lockout condition.

To RESET the boiler press the reset button. If the appliance will not reset, refer to the diagnostic chart shown below, together with the notes given in sections 8.3, 8.4 and 8.5

## 8.3 FAULT FINDING CODES

In the event of the appliance failing to light and an error code flashing, refer to the Diagnostics Chart.

## 8.4 DHW FAULT FINDING

When the hot water tap is turned on, the control should perform a series of checks followed by an ignition sequence. Refer to section 5.2.

If the control has powered up correctly but does not respond to a DHW demand, check the following:

**a)** Check that the DHW flow rate at the tap is greater than 2.5 litres/minute.

**b)** Check operation of fan and air pressure switch.

**c)** Check if Red light on DHW flow switch is on or off. If off, check DHW hall effect sensor and condition of sanitary flow detector in hydraulic group set. If on, check wires to flow switch, check DHW and CH thermistor and wires.

32

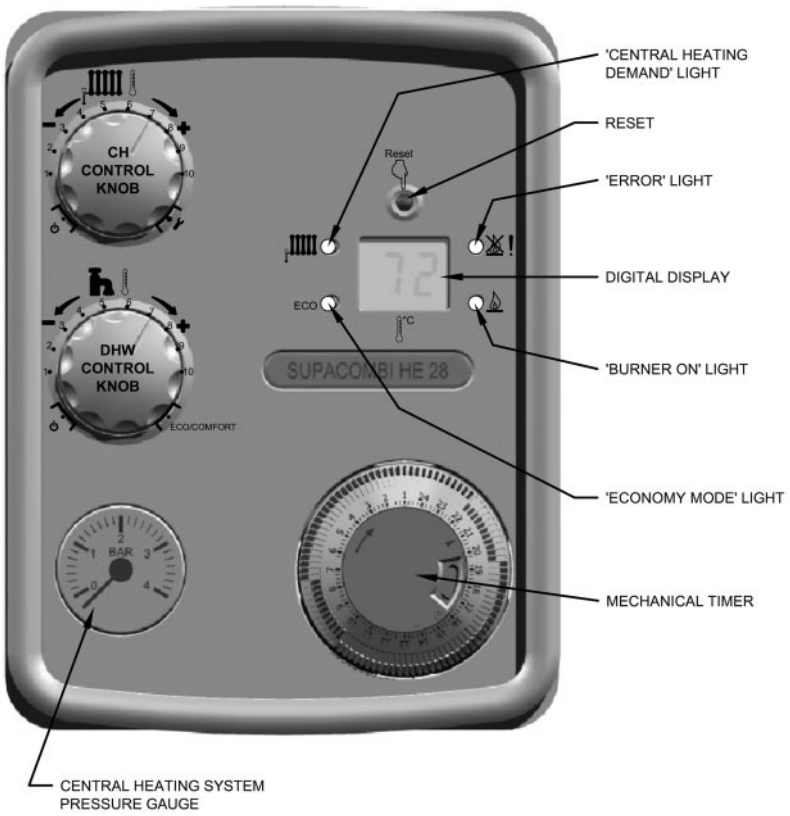

33

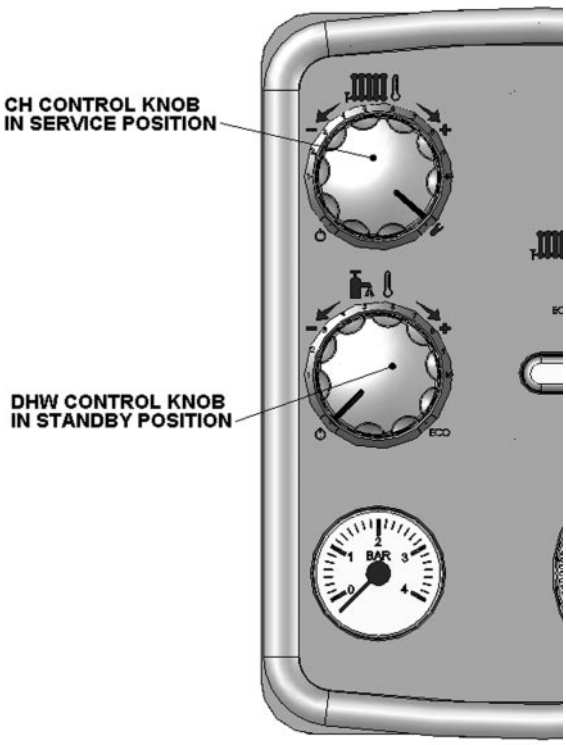


## 8.5 CENTRAL HEATING FAULT FINDING

Upon a demand for Central Heating, (closure of the time switch and room thermostat or programmer, where fitted), the controls should carry out a set of start up checks, followed by an ignition sequence. Refer to Section 5.2.

If the control has powered up correctly but does not respond to a CH demand. Check voltage between pin 2 connector X1A (orange wire) and pin 2 connector X1B (blue wire). If 0 V ac, check room thermostat and clock. If 230 V ac, check control for lockout or blocking codes, (refer to section 8.3), check operation of the pump.

If room thermostat and clock are OK and no lockout or blocking code exists and the control is not in anti cycle mode, then everything should be working correctly, if not contact Technical Help line: 01926 834834

***Note:*** *Whenever a CH demand is removed, either by the timer, the room thermostat or by the appliance's internal temperature control, an anti cycle mode is initiated which prevents the appliance from firing in CH mode for 5 minutes. Ensure that the control is not in this mode by switching off at the mains and restoring it after a delay of 10 seconds.*

## RESET LOCK-OUT CODES (Display flashes and the error ! light will be lit)

| LED CODE | FAULT/EFFECT | REASON | ACTION |
|---|---|---|---|
| 1 | Overheated appliance | Water temperature greater than 105 °C | ● Check no air is in heat exchanger/CH system<br>● CH system and hot water plate heat exchanger blockage<br>● Check CH thermistor |
| 4 | No flame | No flame signal on ignition | ● Check detection electrode/lead – electrode may require cleaning<br>● Check gas supply & pressure<br>● Replace gas valve and/or lead<br>● Check spark gap<br>● Check flue is connected properly<br>● Check condensate trap not blocked |
| 5 | Flame loss | Loss of flame signal during operation | ● Check detection electrode/lead<br>● Check gas valve mains lead |
| 24 | Erroneous APS signal, no flame and fan runs continuously | Missing or defective APS signal | ● Check APS<br>● Check tube connections for blockage/leakage<br>● Check fan operation<br>● Check PCB/X3 connector<br>● Check flue condition |
| 41 | Water flow failure/ flame for a short period only | Low water pressure | ● Check CH flow circulation<br>● Check water pressure(> 0.5 bar)<br>● Check pump/lead<br>● Check expansion vessel<br>● Check flow switch |

***AFTER ENSURING THAT ALL ACTIONS HAVE BEEN CARRIED OUT PRESS THE RESET BUTTON***

## BLOCKING CODES (Display flashes and the error ! light will be lit)

| LED CODE | FAULT/EFFECT | REASON | ACTION |
|---|---|---|---|
| 7 | Overheated appliance | Flue over temperature > 125°C | ● Check air in heat exchanger/recuperator<br>● Check recuperator – flue ways ways may require cleaning<br>● Check flue thermistor |
| 12 | No ignition | CH thermistor failure | ● Check CH thermistor – open circuit<br>● Check PCB/X6 connector – open circuit |
| 13 | No flame | Flue thermistor failure | ● Check PCB/X8 connector<br>● Check flue thermistor |
| 14 | No flame/DHW cold | DHW sensor failure | ● Check DHW sensor – open circuit<br>● Check PCB/X6 connector – open circuit |
| 20 | No flame | Gas valve V2 failure | ● Check/replace gas valve<br>● Check low voltage lead |
| 32 | No flame | Power supply failure | ● Check mains voltage into boiler<br>● Check PCB connectors |
| Boiler temperature displaying | Flame doesn't extinguish No flame after 10sec of hot water draw off | Defective or seized diverter valve | ● Check diverter valve operation |

***IF ANY OF THE ABOVE FAULTS OCCUR DURING INSTALLATION PLEASE REFER TO THE ACTIONS, HOWEVER IF ANY OTHER ERROR CODE IS SHOWING PLEASE CONTACT THE INSTALLER OR TECHNICAL HELP LINE: 01926 834834***

| LED CODE | FAULT/EFFECT | REASON | ACTION |
|---|---|---|---|
| 6 | Temporarily overheated appliance | Water temperature greater than 100°C | ● Check overheat thermostat<br>● Check no air is in heat exchanger/CH system<br>● CH system and hot water plate heat exchanger blockage<br>● Check CH thermistor |
| No ! light display when tap on | DHW cold | Defective DHW flow switch or defective DHW/CH thermister | ● Check DHW flow switch & lead<br>● Check DHW/CH thermister<br>● Check PCB/X4 connector<br>● Check filter in flow switch |
| (No display) | No light indication | Defective power supply | ● Check power supply<br>● Check PCB/X1B connector<br>● Check PCB fuse |

***REFER TO THE ACTIONS FOR THE ABOVE 3 FAULTS***

# 9 REPLACEMENT OF PARTS

Before commencing any service operation, ISOLATE the mains electrical supply and TURN OFF the gas supply at the main service cock.

Replacement of most parts first requires the removal of the casing panels and the combustion chamber lid; refer to section 6.2.

There may be some slight water spillage; so electrical components should be protected.

It is the law that any service work must be carried out by a registered person.

## 9.1 PRIMARY HEAT EXCHANGER

**Refer to Figure 34**

**a)** Remove the casing panels and the combustion chamber lid (see section 6.2).

**b)** Empty the primary circuit of the boiler.

**c)** Remove the combustion chamber front C by unscrewing the screws A and removing the fan bracket B (Fig. 34).

**d)** Remove the screws D and the baffle E.

**e)** Loosen the connection G and slightly move the pipe H upwards.

**f)** Remove the clip I and the safety thermostat J. It is not necessary to disconnect it from the wiring.

34

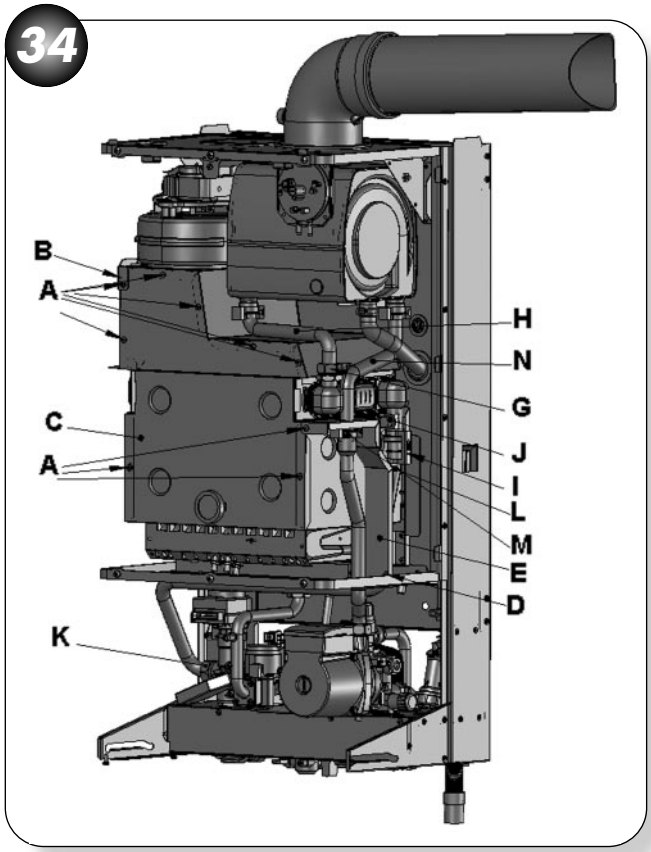


**g)** Loosen the connection K and move the pipe L downwards freeing it from the connection of the primary heat exchanger.

**h)** Remove the clip M.

**i)** Move the pipe N upwards freeing it from the connection and rotate towards right.

**j)** Remove the heat exchanger by sliding it forwards.

**k)** Reassemble the boiler carrying out the removal operations in reverse order. **Fit the clip *I* with the arrow pointing upwards as illustrated in Fig. 34.**

**IMPORTANT - Do not force the connection G when tightening it.**

**Cleaning**

Inspect, and if there are deposits of soot or dirt between the blades of the heat exchanger clean using a soft brush or vacuum cleaner, ensuring that the flame ports are not obstructed.

**Note:** Do not use a wire brush or any abrasive material and avoid any damage to the protective varnish with which the exchanger has been covered.

**Warning: After cleaning or replacement, if it is deemed necessary to undertake a combustion analysis, refer to section 6.1.**

## 9.2 COMBUSTION CHAMBER INSULATION

Inspect, and if there are deposits of soot or dirt between the blades of the heat exchanger clean using a soft brush or vacuum cleaner, ensuring that the flame ports are not obstructed.

**a)** Remove the primary heat exchanger as section 9.1.

**b)** The front insulation may now be replaced, but to replace the side and rear insulation, the burner must be removed. Refer to section 6.3.

**c)** Fit the new insulation and re-assemble in reverse order.

**d)** Ensure that all joints and seals are correctly re-fitted and recommission the system (if necessary) using the procedure in section 5.1.

**It is recommended that a protective mask is worn when changing or handling the insulation material.**

## 9.3 CONDENSING HEAT EXCHANGER

**Refer to Figure 35**

**a)** Remove the casing panels and the combustion chamber lid (see section 6.2).

**b)** Empty the primary circuit of the boiler.

**c)** Remove the fan O and the air pressure switch P.

**d)** Remove the flue temperature probe NTC Q.

**e)** Completely loosen the connection G and slightly move the pipe H upwards.

**f)** Remove the clip R and move the pipe S downwards freeing it from the connection, then turn it towards the right.

**g)** Using pliers, remove the spring T moving it downwards and disconnect the rubber pipe U.

**h)** Remove the bracket V by unscrewing the screws that hold it to the chassis.

**i)** Rotate the heat exchanger as indicated by the arrow and remove it towards the front of the boiler.

**j)** Remove the clip X and the pipe H.

**k)** Reassemble the heat exchanger carrying out the removal operations in reverse order.

**After reassembling ensure that the fan-exchanger and exchanger-elbow gaskets are correctly mounted and ensure a good sealing.**

**Warning: After cleaning or replacement, if it is deemed necessary to undertake a combustion analysis, refer to section 6.1.**

35

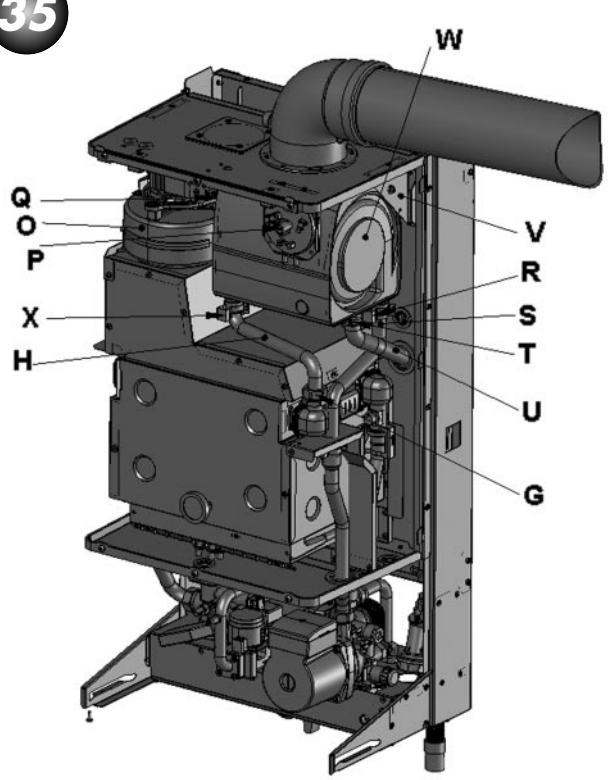


## 9.4 FAN & AIR PRESSURE SWITCH

**Refer to Figure 35**

**a)** Remove all the Casing panels and the combustion chamber lid as section 6.2.

**b)** Disconnect the spade connectors from the fan and measure the electrical resistance of the motor which should be approx. 25 Ω (at room temperature).

**c)** Disconnect the air pressure switch sensing pipe from the fan.

**d)** Remove the fan assembly by twisting counterclockwise and withdraw the assembly by gently easing from the condensing heat exchanger.

**e)** Check the **Air pressure switch** operation

**f)** Disconnect the wires and check the electrical resistance between the connections of the Air pressure switch. The contacts should be open.

**IMPORTANT: Ensure gas is turned OFF before proceeding with the next step.**

**g)** Run the boiler (the Fan must run) and check the electric resistance between the connections. The contacts should be closed.

**h)** Fit the new fan assembly and re-assemble in reverse order.

**i)** Ensure that all joints and seals are correctly re-fitted. (Polarity is immaterial on the fan connections.)

## 9.5 BURNER

**Refer to Section 6.3 and Figures 28 and 29.**

## 9.6 IGNITION & DETECTION ELECTRODES

**Refer to Section 6.3 and Figure 30.**

## 9.7 GAS VALVE

**Refer to Figure 36**

**a)** Remove the Casing panels and the combustion chamber lid (see section 6.2).

**b)** Disconnect the connectors a and b (Fig. 36).

**c)** Turn off the gas supply and disconnect the gas supply pipe from the inlet pipe c to the gas valve.

**d)** Unscrew the retaining nut d from the inlet pipe.

**e)** Unscrew the nut to the burner rail e and remove the whole gas valve assembly.

**f)** Unscrew the screws f and remove the pipes to the valve.

**g)** Reassemble the valve carrying out the removal operations in reverse order, ensuring the 2 gaskets are fitted to the valve.

36

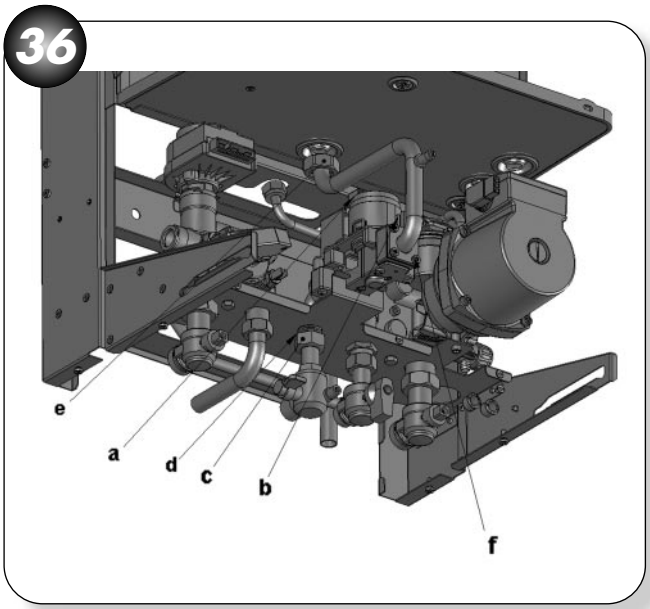


After any service operation, turn on the gas supply at the gas service cock and check for gas soundness.

**Please note, the gas valve self calibrates every 5 burner starts to ensure optimum performance and correct burner pressures.**

## 9.8 DIVERTER VALVE ACTUATOR

**Refer to Figure 37**

**a)** Ensure supply voltage is isolated.

**b)** Remove the casing front panel (see section 6.2) and lower the controls fascia panel.

**c)** Unplug the electrical leads g from the actuator, noting their positions.

**d)** Withdraw the retaining clip h to release the actuator from the head of the diverter valve.

**e)** Fit the new actuator and re-assemble in reverse order ensuring the electrical leads are in their correct positions.

37

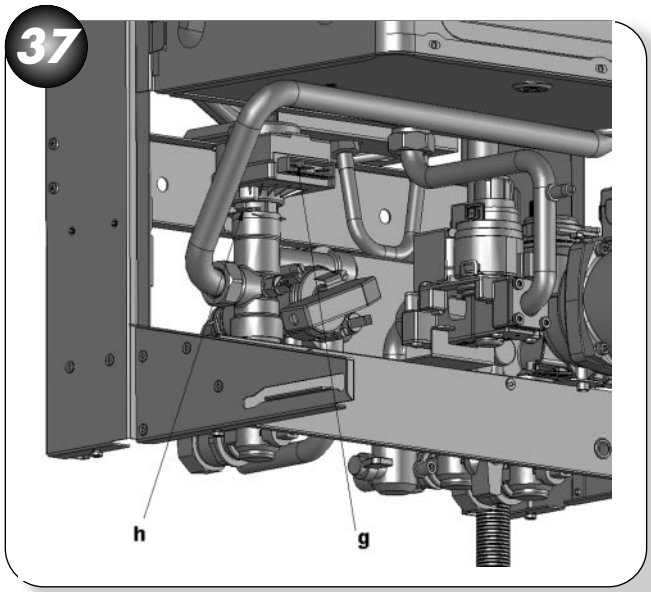


## 9.9 DRAINING THE BOILER

To replace components in sections 9.10 to 9.18 it is necessary to drain the boiler and/or the DHW circuit. There may be some slight water spillage, so electrical components should be protected.

**a)** CH: Close the CH flow and return isolating valves. Attach a hose to the drain point and open the drain valve.

**b)** DHW: Close the cold water inlet valve and open all DHW taps to empty the DHW circuit.

## 9.10 CH FLOW SWITCH

**Refer to Figure 38**

**a)** Ensure supply voltage is isolated.

**b)** Remove the casing front panel and lower the controls fascia panel.

**c)** Withdraw the retaining spring clip h to release the microswitch assembly from the spindle j.

**d)** Remove the three screws securing the halves of the plastic housing and slide the microswitch forwards to release it from the housing.

**e)** Disconnect the electrical leads from the micro switch.

**f)** Fit the new micro switch and re-assemble in reverse order.

## 9.11 DHW FLOW SENSOR (HALL EFFECT)

**Refer to Figure 38**

**a)** Ensure supply voltage is isolated.

**b)** Remove the casing front panel (see section 6.2) and lower the controls fascia panel.

**c)** Draw the switch k upwards to unclip it from the brass manifold.

**d)** Disconnect the electrical lead from the switch.

**e)** Fit the new switch and re-assemble in reverse order.

**Note:** *The hall effect magnet is housed within the DHW flow switch group and should not normally need replacement.*

38

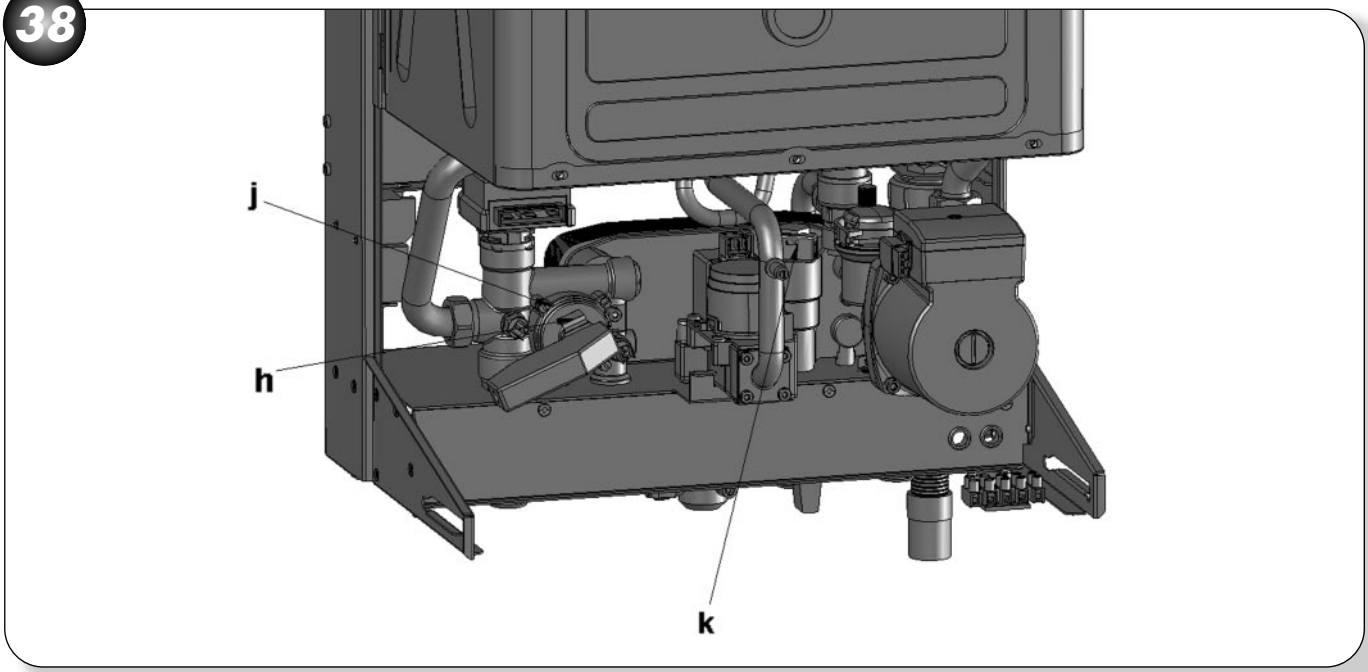

## 9.12 DHW FLOW REGULATOR

**Refer to Figure 39**

**a)** Ensure supply voltage is isolated.

**b)** Remove the casing front panel and lower the controls fascia panel.

**c)** Empty the DHW circuit.

**d)** Remove the DHW flow sensor (see section 9.11).

**e)** Unscrew the body 2 and extract the flow switch group.

**f)** To remove the filter from the flow switch group separate the filter 9 from the threaded ring by gently levering it apart.

**g)** Unscrew the flow regulator 8 and threaded ring 7 and remove it from the body 2.

**h)** Reassemble the parts following the removing sequence in reverse order.

**Parts of DHW flow switch group (Fig. 39)**

| | | | |
|---|---|---|---|
| **1** | **Flow switch sensor** | **6** | **Float** |
| **2** | **Body** | **7** | **Threaded ring** |
| **3** | **O-ring** | **8** | **Flow regulator** |
| **4** | **Spring** | **9** | **Filter** |
| **5** | **Magnetic ring** | | |

39

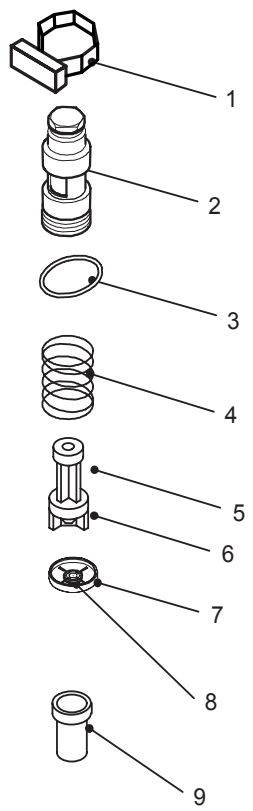


## 9.13 DHW PLATE HEAT EXCHANGER

*Please note, in hard water areas, an increased temperature display on the digital display may mean that the DHW plate heat exchanger requires cleaning.*

**Refer to Figure 38 and 40**

**a)** Remove the casing front panel (see section 6.2) and lower the controls fascia panel.

**b)** Drain both the boiler and DHW circuits, refer to section 9.9.

**c)** Remove the two spring clips securing the bypass pipe and pull out the pipe.

**d)** Remove the two socket screws l securing the heat exchanger to the water manifolds and push the heat exchanger m backwards to release it.

**e)** Fit the new heat exchanger and re-assemble in reverse order.

**f)** Re-commission the heating and hot water systems. Refer to section 5.

40

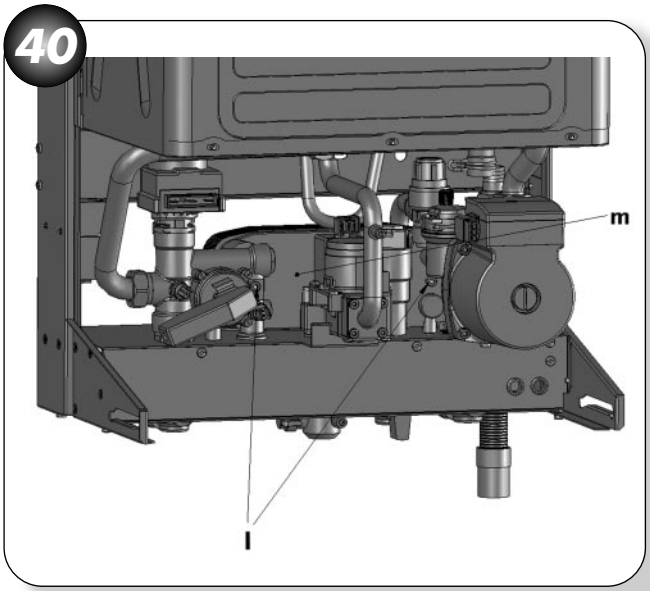


## 9.14 CH/DHW THERMISTORS

**Refer to Figure 38**

**a)** Ensure supply voltage is isolated.

**b)** Remove the casing front panel and lower the controls fascia panel.

**c)** Isolate the boiler from the system. Refer to section 5.

**d)** DHW thermistor: Close the cold water inlet valve and open all DHW taps to empty the DHW circuit.

**e)** CH thermistor: Close the boiler flow and return isolating valves and drain the boiler's CH circuit, refer to section 9.9.

**f)** Disconnect the electrical lead from the thermistor.

**g)** Unscrew the thermistor from the manifold.

**h)** Fit the new thermistor and re-assemble in reverse order.

**i)** Ensure that the copper washers are correctly fitted to provide a sealed joint.

**j)** Re-commission the system. Refer to section 5.

## 9.15 PUMP

**Refer to Figures 41 and 42**

**a)** Ensure supply voltage is isolated.

**b)** Remove the casing front panel and lower the controls fascia panel.

**c)** Empty the primary circuit of the boiler.

**d)** Disconnect the connector n.

**e)** Loosen the connection o, remove the fork p and the pipe q.

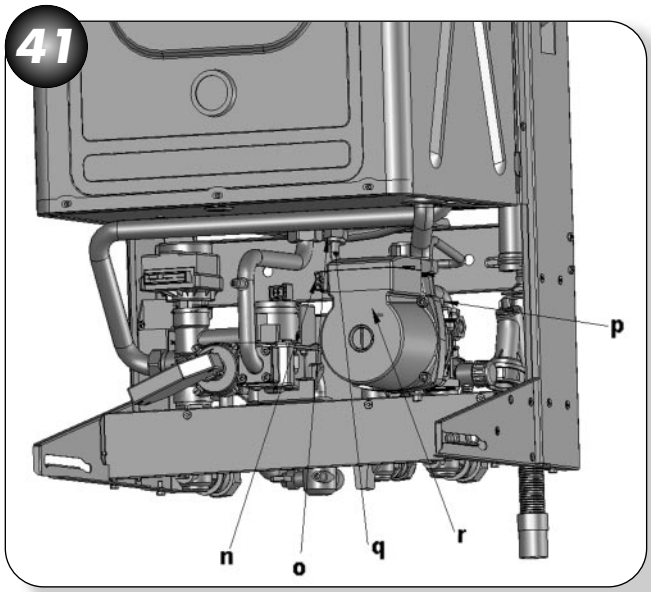


**f)** Remove the fork s (Fig. 43).

**g)** Completely loosen the nut t.

**h)** Unscrew the screws u that hold the pump r on the frame and remove the pump forwards.

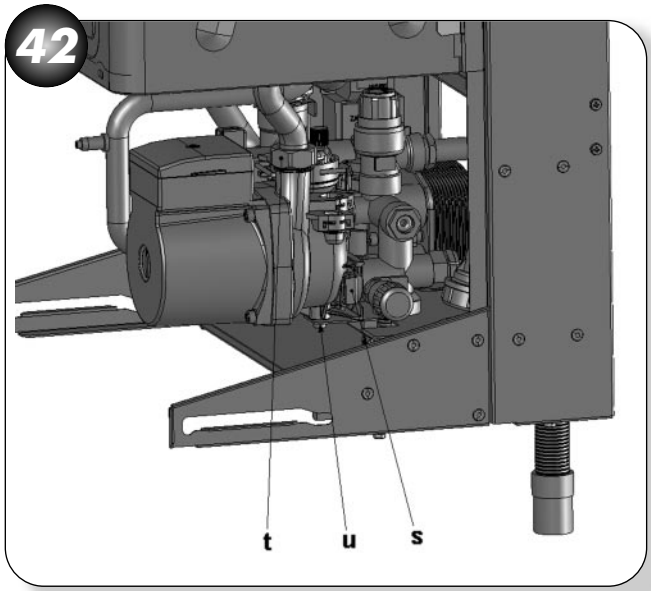


**i)** Reassemble the pump carrying out the removal operations in the reverse order. When reassembling the pump, check the correct location of the O-ring gasket in the inlet port of the pump that seals the connection between the pump and the brass groupset.

## 9.16 AUTO AIR VENT

**Refer to Figure 18**

**a)** Ensure supply voltage is isolated.

**b)** Remove the casing front panel and lower the controls fascia panel.

**c)** Drain the boiler. Refer to section 9.9.

**d)** Remove the clip from the top of the air vent, and remove the vent from the pump hydroblock.

**e)** Fit the new air vent and re-assemble in reverse order.

**f)** Re-commission the system. Refer to section 5.

## 9.17 PRESSURE RELIEF VALVE

**Refer to Figure 18**

**a)** Remove the casing front panel and lower the controls fascia panel.

**b)** Drain the boiler. Refer to section 9.9.

**c)** Undo the pipe connection and unscrew and remove the valve.

**d)** Fit the new valve and re-assemble in reverse order.

**e)** Re-commission the system. Refer to section 5.

## 9.18 PRESSURE GAUGE

**Refer to Figure 43**

**a)** Remove the casing front panel and lower the controls fascia panel.

**b)** Drain the boiler. Refer to section 9.9.

**c)** Disconnect the pressure gauge capillary v from the water manifold.

**d)** From the front, disengage the pressure gauge w from the fascia panel, and remove the gauge.

**e)** Fit the new pressure gauge and re-assemble in reverse order.

**f)** Re-commission the system. Refer to section 5.

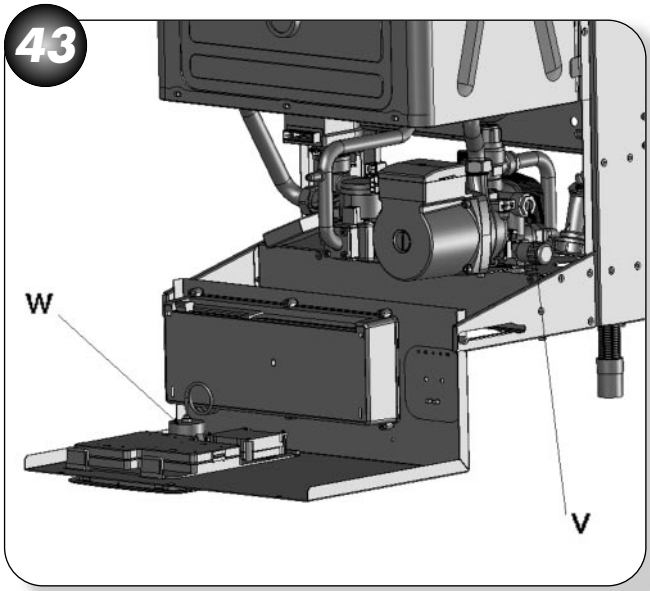


## 9.19 CONDENSATE TRAP

**Refer to Figures 44 and 45**

**a)** Ensure supply voltage is isolated.

**b)** Remove the casing front panel and lower the controls fascia panel.

**c)** Open the drain sump cap AA, while holding a receptacle beneath to capture any condensate.

**d)** Disconnect the condensate drainpipe AB from the appliance.

**e)** Using pliers, slacken the spring AC moving it upwards.

**f)** Remove the pipe AD and lower the trap.

**g)** Disconnect the wires B and C from the trap noting their positions.

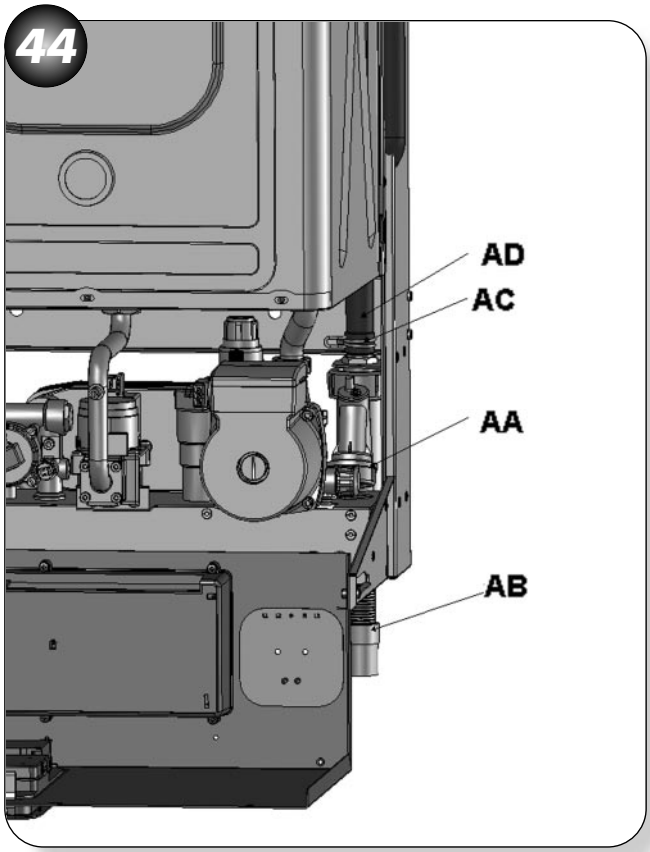


Reassemble carrying out the removal operations in reverse order ensuring that earth wire B is attached as shown and flame detection electrode C is attached to the top of the trap.

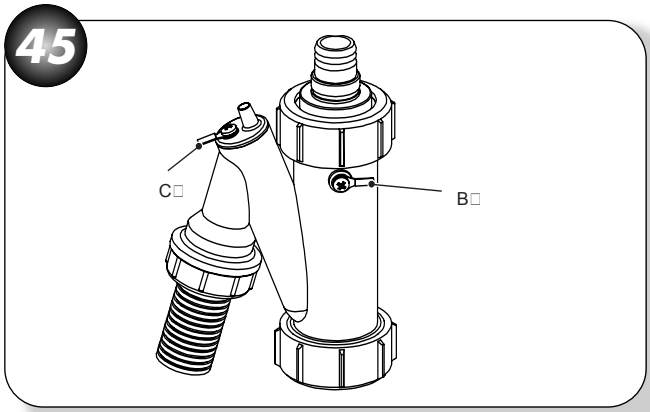


## 9.20 CONTROL PCB

**Refer to Figures 38 and 46**

**a)** Ensure supply voltage is isolated.

**b)** Remove the casing front panel and lower the controls fascia panel.

**c)** Unplug the electrical leads from the main PCB. Refer to section 7.

**d)** Unscrew the PCB plastic cover.

**e)** Unclip the PCB and withdraw.

**f)** Carefully remove the ribbon cable to the controls fascia and fit onto new PCB.

**g)** Fit the new PCB and re-assemble in reverse order, ensuring that the ribbon cable is not trapped.

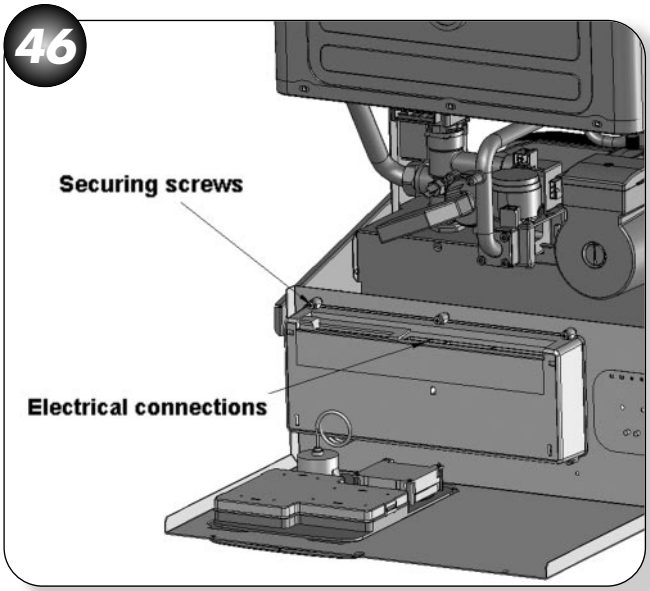


If access to the control PCB is required proceed as follows:-

**a)** Unclip the rear plastic cover.

**b)** Disconnect the ribbon cable from both PCBs.

**c)** Unclip the control PCB and the display PCB from the front housing.

**d)** Replace in reverse order, ensuring the ribbon cable is in the correct position and does not interfere with the operation of the control knobs.

## 9.21 TIMECLOCK

**Refer to Figure 47**

**a)** Ensure supply voltage is isolated.

**b)** Remove the casing front panel and lower the controls fascia panel.

**c)** Unplug the four electrical leads AE from the back of the clock noting their positions.

**d)** Remove the two retaining screws AF and withdraw the clock from the control panel.

**e)** Fit the new clock and re-assemble in reverse order.

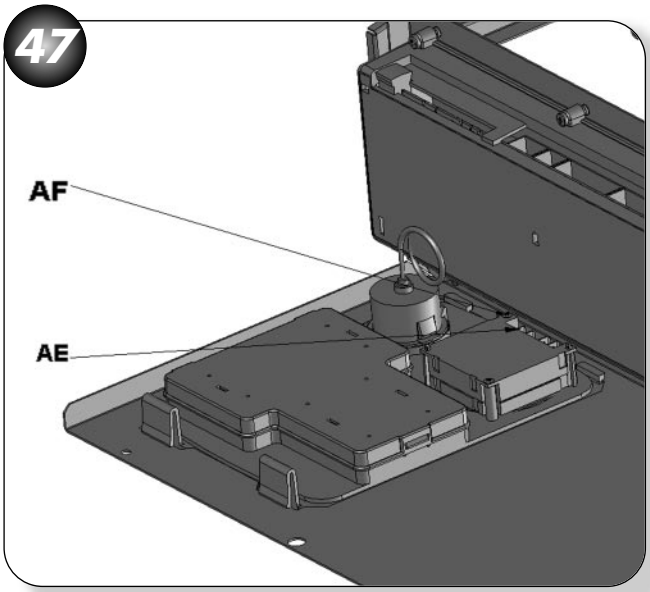

# 10 SHORT PARTS LIST

| Key | G C Part No. | Description | Qty | Manufacturer Part No. |
|---|---|---|---|---|
| 1 | 173-149 | Burner | 1 | 700608 |
| 2 | | Injector | 14 | 701035 |
| 3 | | Expansion vessel | 1 | 451021 |
| 4 | H20-985 | Main heat exchanger | 1 | 451014 |
| 5 | H21-049 | Fan | 1 | 601018 |
| 6 | | Gas valve | 1 | 500705 |
| 7 | | Air pressure switch | 1 | 500703 |
| 8 | | Pressure relief valve | 1 | 300753 |
| 9 | | Combustion chamber insulation panel set | 1 | 988578 |
| 10 | | Control p.c.b. | 1 | 500701 |
| 11 | | Control fascia assembly | 1 | 988576 |
| 12 | | DHW heat exchanger | 1 | 451017 |
| 13 | | Pump | 1 | 500652 |
| 14 | | CH flow switch | 1 | 500593 |
| 15 | | DHW flow switch | 1 | 500668 |
| 16 | E00-688 | Primary pressure switch kit (inc membrane) | 1 | 840501 |
| 17 | E83-086 | Three way diverter valve (electric actuator) | 1 | 500642 |
| 18 | E83-101 | Overheat thermostat | 1 | 550535 |
| 19 | | Flue temperature probe NTC | 1 | 450959 |
| 20 | E23-671 | Timeclock | 1 | 600520 |
| 21 | 164-026 | Thermister (CH or DHW circuit) | 1 | 500590 |
| 22 | E83-127 | Ignition electrode (pair) | 1 | 988577 |
| 23 | E83-122 | Detection electrode | 1 | 500698 |
| 24 | E23-541 | Pressure gauge | 1 | 450961 |

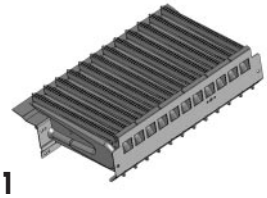
1

2

3

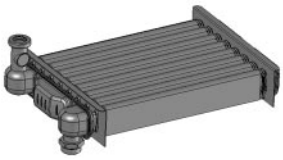
4

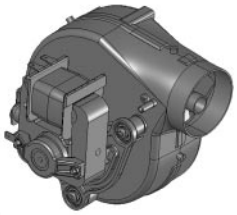
5

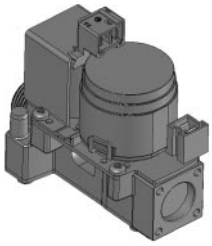
6

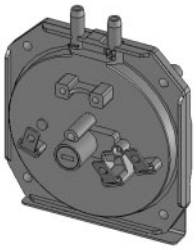
7

8

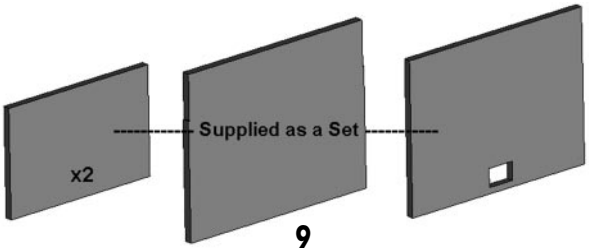

9

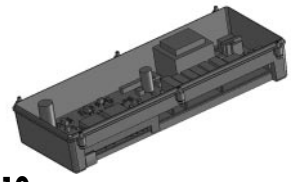
10

11

12

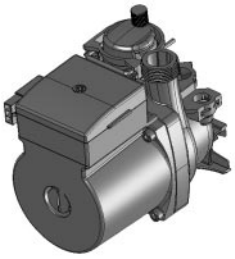
13

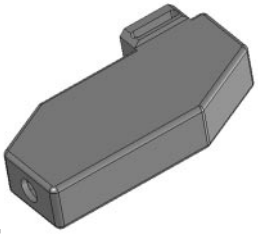
14

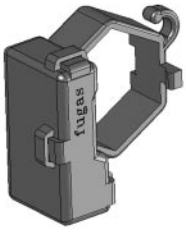

15

18

19

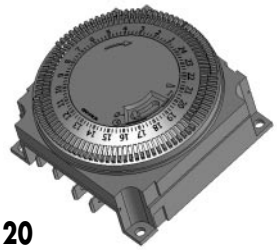
20

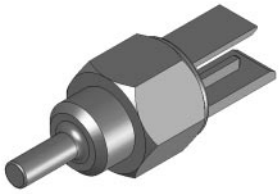
21

22

23

24

**BENCHMARK No.** | | | | | | |

# GAS BOILER COMMISSIONING CHECKLIST

**BOILER SERIAL No.** _____ **NOTIFICATION No.** _____

## CONTROLS *To comply with the Building Regulations, each section must have a tick in one or other of the boxes*

| | | | | |
|---|---|---|---|---|
| TIME & TEMPERATURE CONTROL TO HEATING | ROOM T/STAT & PROGRAMMER/TIMER | ☐ | PROGRAMMABLE ROOMSTAT | ☐ |
| TIME & TEMPERATURE CONTROL TO HOT WATER | CYLINDER T/STAT & PROGRAMMER/TIMER | ☐ | COMBI BOILER | ☐ |
| HEATING ZONE VALVES | FITTED | ☐ | NOT REQUIRED | ☐ |
| HOT WATER ZONE VALVES | FITTED | ☐ | NOT REQUIRED | ☐ |
| THERMOSTATIC RADIATOR VALVES | FITTED | ☐ | | |
| AUTOMATIC BYPASS TO SYSTEM | FITTED | ☐ | NOT REQUIRED | ☐ |

## FOR ALL BOILERS CONFIRM THE FOLLOWING

| | |
|---|---|
| THE SYSTEM HAS BEEN FLUSHED IN ACCORDANCE WITH THE BOILER MANUFACTURER'S INSTRUCTIONS | ☐ |
| THE SYSTEM CLEANER USED | |
| THE INHIBITOR USED | |

## FOR THE CENTRAL HEATING MODE, MEASURE & RECORD

| | | | | |
|---|---|---|---|---|
| GAS RATE | ☐ | m3/hr | ☐ | ft3/hr |
| BURNER OPERATING PRESSURE (IF APPLICABLE) | ☐ | N/A | ☐ | mBar |
| CENTRAL HEATING FLOW TEMPERATURE | | | ☐ | °C |
| CENTRAL HEATING RETURN TEMPERATURE | | | ☐ | °C |

## FOR COMBINATION BOILERS ONLY

| | | | | |
|---|---|---|---|---|
| HAS A WATER SCALE REDUCER BEEN FITTED? | YES | ☐ | NO | ☐ |
| WHAT TYPE OF SCALE REDUCER HAS BEEN FITTED? | | | | |

## FOR THE DOMESTIC HOT WATER MODE, MEASURE & RECORD

| | | | | |
|---|---|---|---|---|
| GAS RATE | ☐ | m3/hr | ☐ | ft3/hr |
| MAXIMUM BURNER OPERATING PRESSURE (IF APPLICABLE) | ☐ | N/A | ☐ | mBar |
| COLD WATER INLET TEMPERATURE | | | ☐ | °C |
| HOT WATER OUTLET TEMPERATURE | | | ☐ | °C |
| WATER FLOW RATE | | | ☐ | lts/min |

## FOR CONDENSING BOILERS ONLY CONFIRM THE FOLLOWING

| | | |
|---|---|---|
| THE CONDENSATE DRAIN HAS BEEN INSTALLED IN ACCORDANCE WITH THE MANUFACTURERS INSTRUCTIONS | YES | ☐ |

## FOR ALL INSTALLATIONS CONFIRM THE FOLLOWING

| | | | | |
|---|---|---|---|---|
| THE HEATING AND HOT WATER SYSTEM COMPLIES WITH CURRENT BUILDING REGULATIONS | | | | ☐ |
| THE APPLIANCE AND ASSOCIATED EQUIPMENT HAS BEEN INSTALLED AND COMMISSIONED IN ACCORDANCE WITH THE MANUFACTURER'S INSTRUCTIONS | | | | ☐ |
| IF REQUIRED BY THE MANUFACTURER, HAVE YOU RECORDED A $CO/CO_2$ RATIO READING | N/A | ☐ | YES ☐ | $CO/CO_2$ RATIO |
| THE OPERATION OF THE APPLIANCE AND SYSTEM CONTROLS HAVE BEEN DEMONSTRATED TO THE CUSTOMER | | | | ☐ |
| THE MANUFACTURER'S LITERATURE HAS BEEN LEFT WITH THE CUSTOMER | | | | ☐ |

**COMMISSIONING ENG'S NAME**

PRINT _____ CORGI ID No. _____

SIGN _____ DATE _____

# SERVICE INTERVAL RECORD

It is recommended that your heating system is serviced regularly
and that you complete the appropriate Service Interval Record below.

**SERVICE PROVIDER** Before completing the appropriate Service Interval Record below, please ensure you have carried out the service as described in the boiler manufacturer's instructions.

Always use the appliance manufacturer's specified spare part when replacing gas controls.

## SERVICE 1 DATE:

ENGINEER NAME
COMPANY NAME
TEL No.
CORGI ID SERIAL No.
COMMENTS

SIGNATURE

## SERVICE 2 DATE:

ENGINEER NAME
COMPANY NAME
TEL No.
CORGI ID SERIAL No.
COMMENTS

SIGNATURE

## SERVICE 3 DATE:

ENGINEER NAME
COMPANY NAME
TEL No.
CORGI ID SERIAL No.
COMMENTS

SIGNATURE

## SERVICE 4 DATE:

ENGINEER NAME
COMPANY NAME
TEL No.
CORGI ID SERIAL No.
COMMENTS

SIGNATURE

## SERVICE 5 DATE:

ENGINEER NAME
COMPANY NAME
TEL No.
CORGI ID SERIAL No.
COMMENTS

SIGNATURE

## SERVICE 6 DATE:

ENGINEER NAME
COMPANY NAME
TEL No.
CORGI ID SERIAL No.
COMMENTS

SIGNATURE

## SERVICE 7 DATE:

ENGINEER NAME
COMPANY NAME
TEL No.
CORGI ID SERIAL No.
COMMENTS

SIGNATURE

## SERVICE 8 DATE:

ENGINEER NAME
COMPANY NAME
TEL No.
CORGI ID SERIAL No.
COMMENTS

SIGNATURE

## SERVICE 9 DATE:

ENGINEER NAME
COMPANY NAME
TEL No.
CORGI ID SERIAL No.
COMMENTS

SIGNATURE

## SERVICE 10 DATE:

ENGINEER NAME
COMPANY NAME
TEL No.
CORGI ID SERIAL No.
COMMENTS

SIGNATURE

MAXOL

Maxol Boilers, 20-22 First Avenue,
Bluebridge Industrial Estate, Halstead, Essex, CO9 2EX
Tel: 01787 272800 Sales: 01787 475557 Fax: 01787 474588
Technical/Service: 01926 834834 Training: 01926 834838
Email: sales@maxolboilers.co.uk or service@maxolboilers.co.uk or training@maxolboilers.co.uk
www.maxolboilers.co.uk

**Maxol Boilers are manufactured in the UK by Halstead Boilers Ltd, part of the Glen Dimplex Group.**

WRAS APPROVED PRODUCT

benchmark™
The code of practice for the installation, commissioning & servicing of central heating systems

*Halstead Boilers is continuously improving its products and may therefore change specifications without prior notice.*
*The statutory rights of the consumer are not affected.*

*03/07 - 751156*

**SERVICE HELPLINE: 01926 834834**