INSTALLATION & SERVICING INSTRUCTIONS

MYSON

WM15/30 BFa, WM30/40 BF, WM40/50 BF

From Serial No.

Wall Mounted Domestic Gas Fired Boiler, Natural Draught Balanced Flue

LEAVE THESE INSTRUCTIONS ADJACENT TO THE GAS METER.

Page 0

Page 0a

Economist MYSON

MYSON ECONOMIST WM15/30 BFa, WM30/40 BF, WM40/50 BF INSTALLATION AND SERVICING INDEX

SECTION	SUBJECT	PAGE
1.0	TECHNICAL DATA	3
2.0	SAFETY	7
3.0	RANGE RATING	8
4.0	BOILER LOCATION	8

5.0	**WATER SYSTEM**	10
6.0	**INSTALLATION PROCEDURE**	16
7.0	**INITIAL LIGHTING**	18
8.0	**COMMISSIONING**	19
9.0	**SERVICING**	21
10.0	**FAULT FINDING**	27
11.0	**SHORT LIST OF SPARE PARTS**	31

IT IS THE LAW THAT THIS APPLIANCE BE INSTALLED BY BRITISH GAS OR ANOTHER CORGI REGISTERED INSTALLER.

INTRODUCTION

This Installation Manual is applicable to the following models from the Potterton Myson Economist range of gas boilers:

WM15/30 BFa	G.C. No. 41.838.90
WM30/40 BF	G.C. No. 41.838.82
WM40/50 BF	G.C. No. 41.838.85

These are balanced flue, wall mounted, central heating boilers, for use on natural gas only.

They require pumped circulation and cannot be used on gravity circulations. A bypass must always be fitted into the heating system, across the boiler. A pump overrun thermostat is fitted as standard and a permanent live connection to the boiler is required.

They may be range rated to suit individual heating systems.

Myson Ltd, pursues a policy of continuing improvement in design and performance of its products. The right is therefore reserved to vary specification without notice.

1.0 TECHNICAL DATA RATINGS

WM15/30 BFa	MAXIMUM	MID RANGE	MINIMUM
HEAT OUTPUT kW	8.8	6.6	4.4
Btu/h	30,000	22,500	15,000
HEAT INPUT kW	11.0	8.4	5.6
Btu/h	37,500	28,500	19,200
BURNER PRESSURE mbar	11.8	6.8	3.3
in wg	4.7	2.7	1.3
GAS RATE m3/h	1.0	0.8	0.5
ft3/h	36.0	28.0	19.0
WM30/40 BF	**MAXIMUM**	**MID RANGE**	**MINIMUM**
HEAT OUTPUT kW	11.7	10.3	8.8
Btu/h	40,000	35,000	30,000
HEAT INPUT kW	14.7	13.0	11.3
Btu/h	50,000	44,300	38,500
BURNER PRESSURE mbar	14.6	11.7	8.8
in wg	5.9	4.7	3.5
GAS RATE m3/h	1.4	1.2	1.0
ft3/h	48.0	43.0	37.0
WM40/50 BF	**MAXIMUM**	**MID RANGE**	**MINIMUM**
HEAT OUTPUT kW	14.7	13.2	11.7
Btu/h	50,000	45,000	40,000
HEAT INPUT kW	18.3	16.7	15.0
Btu/h	62,500	57,000	51,300
BURNER PRESSURE mbar	14.9	12.5	10.2
in wg	6.0	5.0	4.1
GAS RATE m3/h	1.7	1.6	1.4
ft3/h	60.0	55.0	50.0

INJECTORS

MODEL	SIZE mm	SIZE In	MARKING
WM15/30 BFa	2.70	0.106	270
WM30/40 BF	3.00	0.118	300

WM40/50 BF	3.30	0.130	330

OVERALL DIMENSIONS

	HEIGHT			WIDTH			DEPTH	
MODEL	**mm**	**In**		**mm**	**In**		**mm**	**In**
WM 15/30 BFa	600	23 5/8		327	12 7/8		300	11 3/4
WM30/40 BF	650	25 5/8		361	14 1/4		300	11 3/4
WM40/50 BF	650	25 5/8		407	16		300	11 3/4

Page 3

WEIGHTS

MODEL		TOTAL WEIGHT kg	Ib		LIFT WEIGHT kg	Ib
WM15/30 BFa		25	56		16	35
WM30/40 BF		31	68		21	46
WM40/50 BF		35	78		23	50

WATER CAPACITIES

MODEL	litre	pint
WM15/30 BFa	0.7	1.3
WM30/40 BF	1.1	1.9
WM40/50 BF	1.3	2.2

MINIMUM WATER FLOW RATES (ie to give 11 °C temperature rise)

MODEL	litre/h	gal/h
WM15/30 BFa	690	150
WM30/40 BF	920	200
WM40/50 BF	1150	250

BYPASS DIAMETER 15mm diameter.

GAS CONNECTION Rc 1/2 (1/2 in BSP int)

WATER CONNECTION Flow 22mm compression fitting LH side.
Return 22mm compression fitting RH side.

ELECTRICITY SUPPLY 240V-50Hz, fused at 3A.

MINIMUM STATIC HEAD 0.2m (8in)

MAXIMUM STATIC HEAD 30.5m (100ft)

Page 4

MAXIMUM BOILER THERMOSTAT SETTING 79°C (174°F)

STANDARD FLUE Wall thickness from 230mm (9in) to 355mm (14in)

MINIMUM CLEARANCES FOR INSTALLATION AND SERVICING

Left and right side	6mm (1/4in)
Top of boiler	75mm (3in)
Underside of boiler	125mm (5in)
Front of boiler	610mm (24in)

FREE AREA OF CUPBOARD VENTS

MODEL	AIR FROM ROOM cm^2	in^2	AIR FROM OUTSIDE cm^2	in^2
WM15/30 BFa	99	15	49	8
WM30/40 BF	132	20	66	10
WM40/50 BF	165	26	82	13

DIMENSION FOR INSTALLATION, mm (See Fig. 1)

MODEL	A	B	C	D	E	F	G	H	J	K	L	M	N	P
WM15/30 BFa	327	600	300	252	45	255	500	100	128	287	282	568	323	225
WM30/40 BF	361	650	300	286	45	255	550	100	128	287	316	618	373	259
WM40/50 BF	407	650	300	332	45	255	550	100	128	332	362	618	328	305

TERMINAL GUARDS REFERENCE TYPE

MODEL	TOWER FLUE	QUINNELL BARRETT
WM15/30 BFa	A	E
WM30/40 BF	A	E
WM40/50 BF	D	M3

Page 5

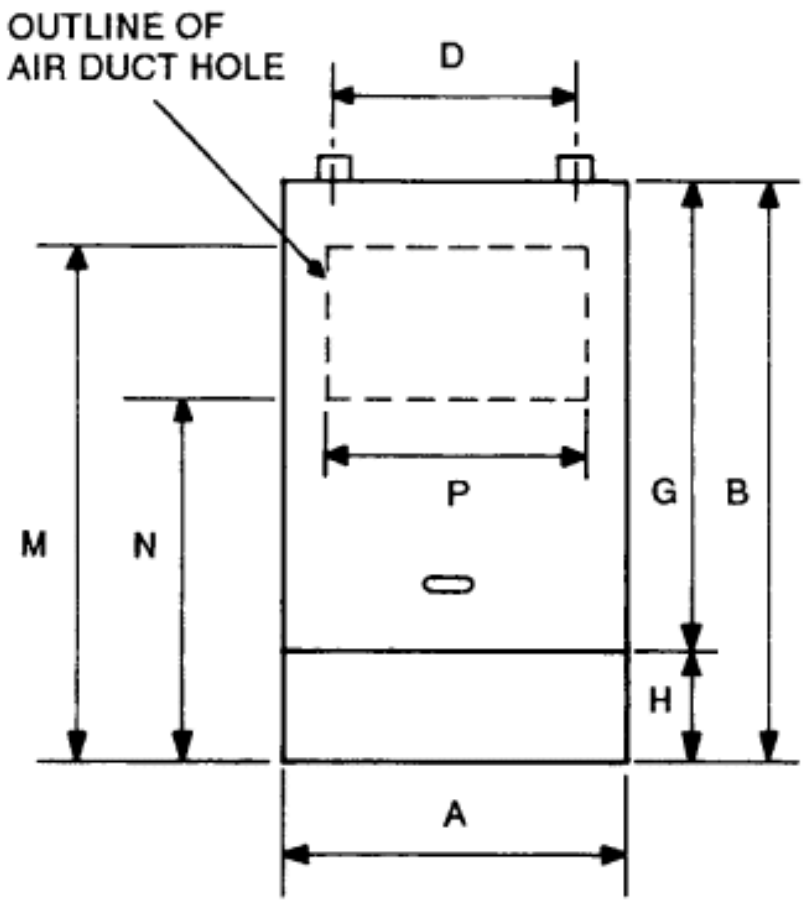

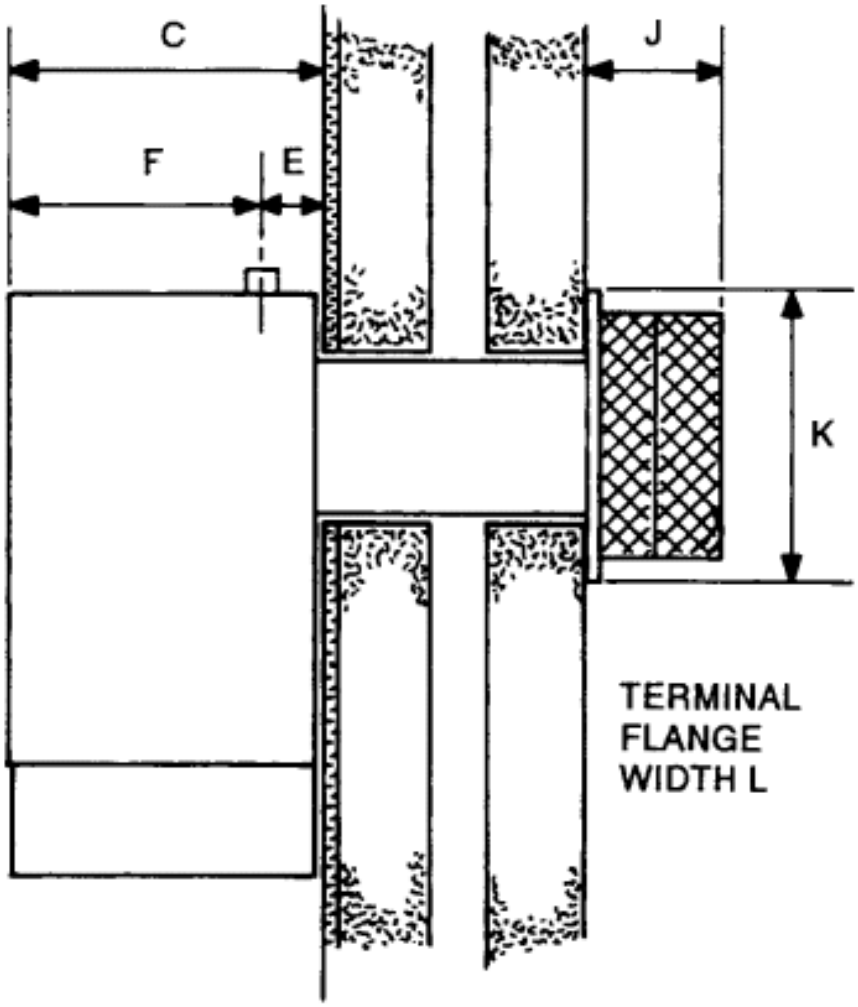

Fig. 1 Dimensions

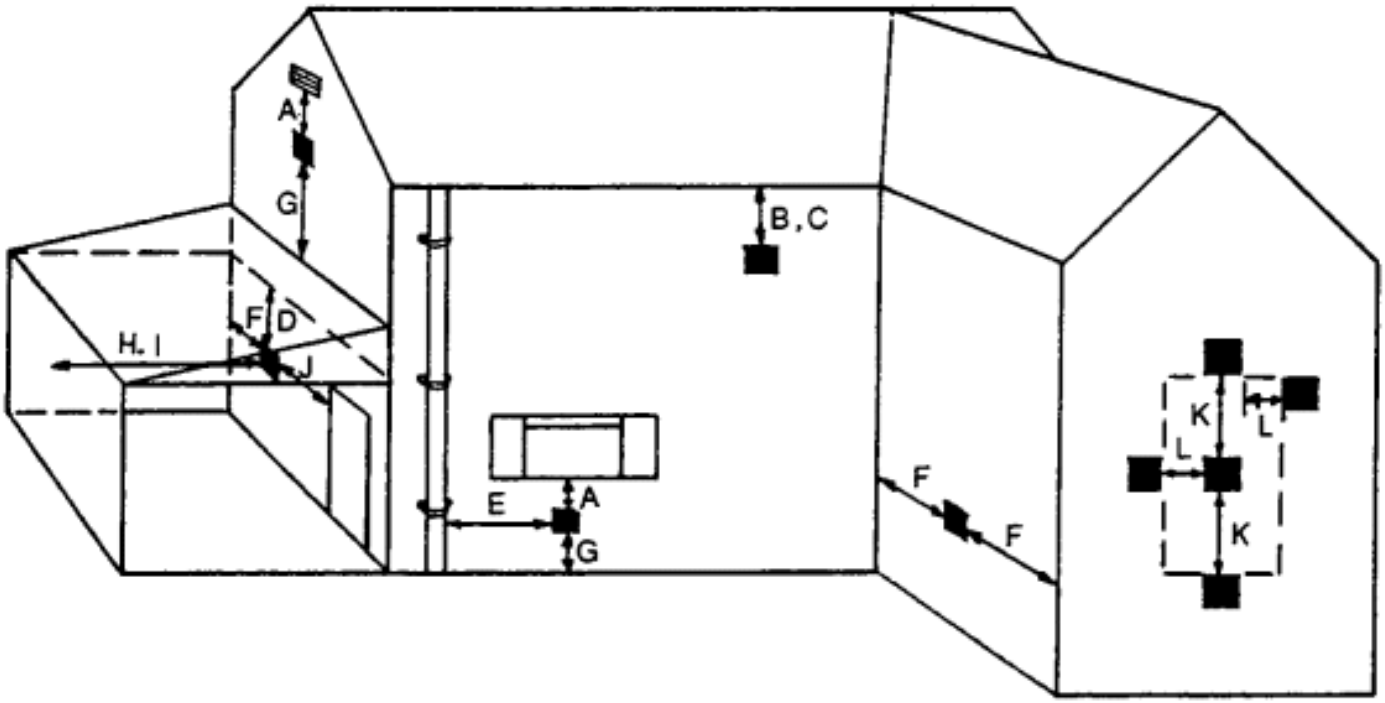

Fig. 2 Balanced Flue Terminal Positions

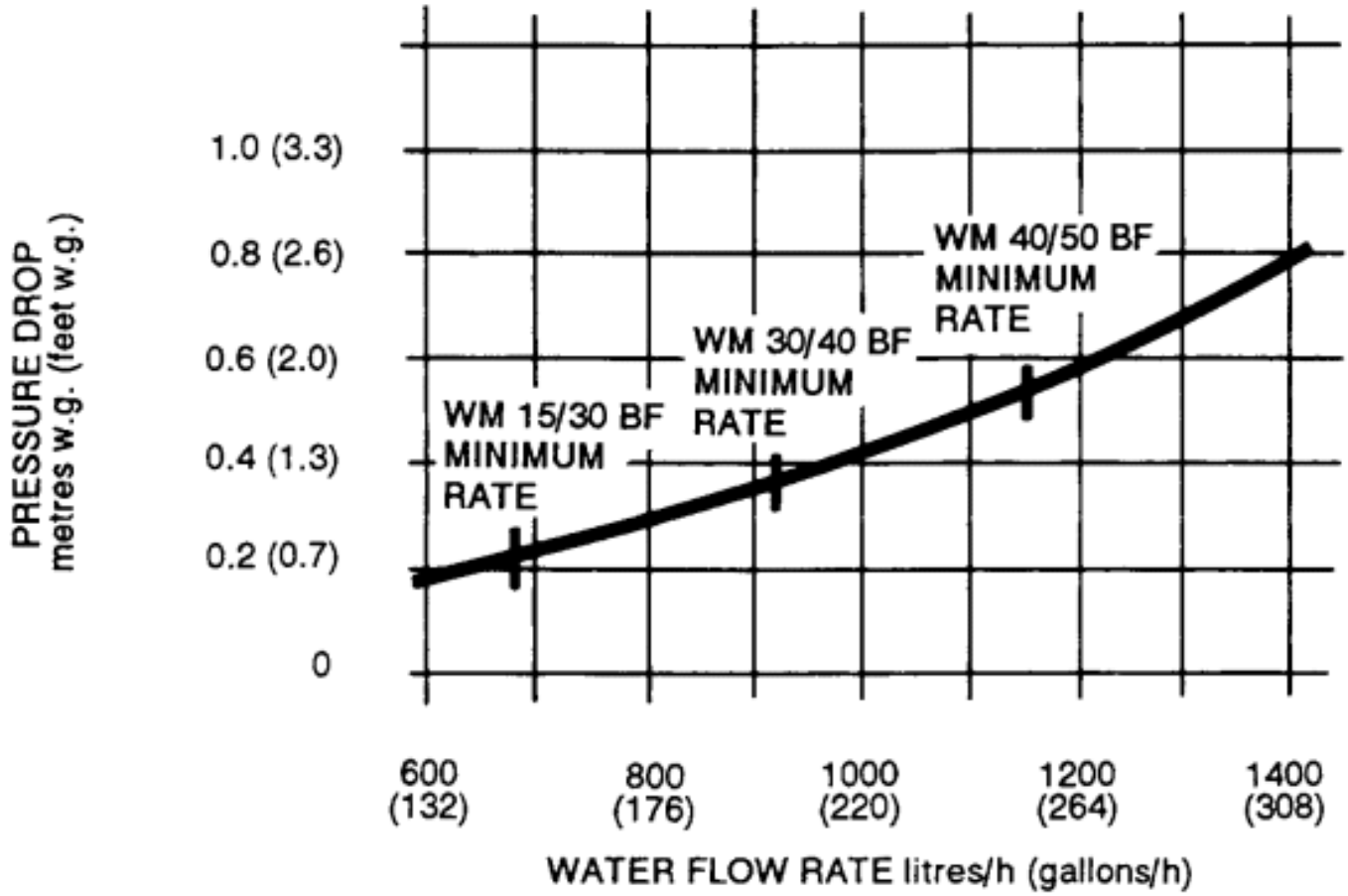

Fig. 3 Resistance to Water Flow through Boiler

Page 6

2.0 SAFETY

It is essential that the boiler is installed in accordance with this manual. It is the law that the installation be carried out by British Gas or another CORGI Registered Installer.

2.1 Statutory Requirements

The installation of the boiler must be in accordance with the current issue of the Gas Safety (Installation and Use) Regulations, Building Regulations, Building Standards (Scotland) Regulations, current IEE wiring regulations and model and local water undertaking bylaws. Detailed recommendations are contained in the following British Standards.

BS5440 Part 1,	1990 ;	BS5440 Part 2,	1989;
BS5449	1990;	BS5546	1990;
BS6798	1987;	BS6891	1988;

2.2 Gas Supply

Installation pipes should be fitted, tested for soundness and purged in accordance with BS6891, 1988. Pipework from the meter to the boiler should be of a size to ensure an adequate supply of gas, as set down in BS6891, 1988. Normally 15mm diameter pipe will be necessary to supply the gas rate shown in the Technical Data section, being adequate for Model WM1 5/30 BFa up to a length of 15m, for Model WM30/40 BF up to a length of of 9m and for Model WM40/50 BF up to a length of 7.5m. These lengths are reduced by 0.5m for each elbow and tee.

2.3 Electricity Supply

All electrical wiring must be carried out by a qualified electrician. All external components should be of an approved type and wired in accordance with current IEE regulations and any local regulations that may apply.

The appliance must be earthed. The supply to the boiler should be 240V - 50Hz and fused at 3A. The rating of the boiler is approximately 5VA.

IT MUST BE POSSIBLE TO COMPLETELY ISOLATE THE BOILER AND ALL ASSOCIATED CONTROLS FROM MAINS ELECTRICITY. THE COMPLETE ELECTRICAL SYSTEM MUST BE POWERED FROM A SINGLE POINT, WHICH SERVES THE HEATING SYSTEM ONLY. THIS POINT CAN BE CONNECTED USING A FUSED THREE PIN PLUG AND SHUTTERED SOCKET, BOTH COMPLYING WITH THE REQUIREMENTS OF BS1363. ALTERNATIVELY, A FUSED DOUBLE POLE SWITCH WITH A CONTACT SEPARATION OF AT LEAST 3mm ON BOTH POLES MAY BE USED.

All external cables to the boiler should be rated to take at least 3A, ie at least 0.75mm2 (24/0.2mm) to BS6500 1990, Table 16. There must be a permanent live connection to the boiler, unswitched by any external controls, for the pump overrun facility to work.

3.0 RANGE RATING

The boilers covered by this manual can be range rated to suit individual systems. They can be used where the maximum loads fall within the values of heat output shown in the Technical Data Section.

NOTE: The boilers are factory set to give the maximum heat output.

4.0 BOILER LOCATION

The appliances are not suitable for external installation.

The boiler may be installed in any room, although particular attention is drawn to the requirements of current IEE regulations and, in Scotland, the electrical provisions of the Building Standards applicable in Scotland, with respect to the installation of a boiler in a room containing a bath or shower. Where a room sealed boiler is installed in a room containing a bath or shower, any electrical switch or boiler control utilising mains electricity should be so situated that it cannot be touched by a person using the bath or shower.

The boiler is suitable for installation onto a combustible wall. If the boiler is to be fitted in a timber framed building, it should be fitted in accordance with the British Gas Publication "Guide for Gas Installations in Timber Framed Houses," reference DM2. If in doubt, advice may be sought from the local Gas Region.

4.1 Installation in Cupboard or Compartment

A cupboard or compartment used to enclose the boiler should be designed and constructed specifically for this purpose. An existing cupboard or compartment may be used provided that it is modified for this purpose. Details of cupboard or compartment design are given in BS6798 1987.

These are room sealed appliances and therefore no air supply is required for combustion. However, if the boiler is installed in a cupboard or compartment, permanent ventilation is required at high and low level for cooling purposes, either direct from outside or from a room. Both high and low level air vents should communicate with the same wall to outside air, or to the same room. Each vent should have a free area of at least that given in the Technical Data Section. Further details are given in BS5440 Part 2, 1989.

4.2 Boiler Clearances

The boiler position should be such that the following minimum clearances are provided for installation and servicing:

Left and right hand side	6mm (1/4in)
Top of wallplate	75mm (3in)
Underside of wallplate	125mm (5in)
Front of wallplate	910mm (36in)

4.3 Positioning of Balanced Flue Terminal

The boiler is supplied with a standard flue suitable for wall thicknesses from 230mm (9in) to 355mm (14in). The boiler terminal must be installed such that it is exposed to external air which has a free passage across it at all times, so that combustion products can disperse freely.

In certain weather conditions the terminal may steam, and positions where this could cause a nuisance should be avoided.

If the terminal discharges onto a passageway or pathway or over an adjoining property, check that the combustion products will not cause a nuisance and that the terminals will not obstruct the passageway. In some areas, local bylaws ask for a minimum height for projections from a wall above a public footpath.

If the terminal is fitted within 850mm of a plastic gutter, or within 450mm of painted eaves or painted gutter, an aluminium shield at least 750mm long should be fitted to the underside of the gutter or painted surface.

If a terminal is fitted less than 2m above a balcony, above ground or above a flat roof to which people have access, then a suitable terminal guard must be provided. These are available from Tower Flue Components Ltd, Vale Rise, Tonbridge, Kent, or from Quinnell Barrett Ltd, 884 Old Kent Road, London SE15, quoting reference type shown in Technical Data Section. The terminal guard should be screwed to the wall so that it is at least 50mm from all parts of the terminal.

The minimum acceptable spacings from the terminal to any obstructions and ventilation openings are: (refer to Figure 2)

	TERMINAL POSITION	MINIMUM SPACING
A	Directly below an openable window or any other opening, ie air brick	300mm
B	Below gutters, soil pipes or drain pipes	300mm
C	Below eaves	300mm
D	Below balconies or car port roof	600mm
E	From vertical drain pipes and soil pipes	75mm
F	From internal or external corners	600mm
G	Above ground, roof or balcony level	300mm
H	From a surface facing a terminal	600mm
I	From a terminal facing a terminal	600mm

J	From opening in a car port eg door, window into dwelling	1200mm
K	Vertically from a terminal on the same wall	1500mm
L	Horizontally from a terminal on the same wall	300mm

Additional notes for car ports and other single storey "add-on" extensions:

Any car port or other add-on extension should consist of a roof, or a roof and one other wall. If it consists of a roof and two other walls the installation shall be treated as suspect and further advice sought.

If there is any opening in the car port into the dwelling, eg door, window, then the terminal must be at least 1200mm away from the opening. If it is less, then the installation must be treated as suspect and further advice sought. If it is more than 1200mm, the D, F,H, and I shall apply where D is the vertical distance between the lowest point of the roof and the top of the terminal.

If the roof is plastic, then the installation should be treated with great care, as there is no simple way of protecting the roof.

5.0 WATER SYSTEM

The boiler is supplied with copper compression water fittings, of the size shown in the Technical Data Section. The flow and return pipes are identified by labels and on Figure 13.

The installation should comply with the appropriate requirements of BS5449, 1990, BS5546, 1990 and BS6798, 1987. The boiler is designed for use on fully pumped systems only, of the open vented or sealed type.

5.1 Open Vented or Sealed System

Pump

The pump should be capable of providing the mimimum water flow rate, as shown in the Techmical Data Section. The boiler pressure loss graph (Figure 3) should be considered when selecting the pump. The recommended selection is a Myson Unit 5 or equivalent. The pump should be fitted with isolation valves and in a readily accessible position in the flow pipe from the boiler.

Drain Cock

At least one drain cock should be fitted, at the lowest point in the system.

Bypass

The flow through the boiler must not be allowed to fall below the figure shown in the Technical Data Section. Therefore a bypass of at least the diameter shown in the Technical Data Section, should be fitted across the boiler. The total length of the bypass loop should be at least 3m. It is acceptable to use a radiator that cannot be shut off or adjusted by the customer as the bypass.

The use of this bypass will mean the temperature differential across the boiler will be less than that across the heating system.

External Controls

It should not be possible for the boiler to fire when external controls have shut all waterways or switched off the pump.

Inhibitor

When an inhibitor is to be used in the system, contact should be made with the inhibitor manufacturer, so they can recommend their most suitable product. The boiler has a copper heat exchanger.

Working Pressure

The maximum working pressure to which the boiler should be subjected is 3 bar (44 lbf/in2). The normal recommended range of pressure is from 0.1 bar (1.5 lbf/in2) to 1.5 bar (22 lbf/in2).

5.2 Open Vented System Only

Schematic layouts are shown in Figures 4 to 6 .

Hot Water Storage Cylinder

The cylinder must be either an indirect type or a direct type fitted with an immersion calorifier that is suitable for the system pressure. The cylinder should be to the requirements of BS1566, Part 1, 1984. Single feed (self priming) indirect cylinders are not recommended.

Open Vent and Cold Feed

A combined feed and vent is recommended, as there is no possibility of either pumping over or air being drawn in. A system using a Myson Aerjec is equivalent to a combined feed and vent, with improved air removal from system. The combined feed and vent must be at least 22mm diameter.

Some Water Authorities require a stop cock in the cold feed pipe, in which case, a combined feed and vent cannot be used. A close coupled feed and vent should then be used, taking note of the vent lengths required to prevent pump surges causing either pumping over or air to be drawn in. The vent must be at least 22mm diameter and the feed at least 15mm diameter. There must be no valves or restrictions between the boiler and the outlet of the vent with any system. The feed and expansion cistern should be not less than 23 litre (5 gallon) capacity, and should not be situated more than 30 metres (100ft) above the boiler.

5.3 Sealed Systems Only

A schematic layout is shown in Figure 7 .

Safety Valve

A spring loaded safety valve complying with the relevant requirements of BS6759, Part 1, 1984, should be fitted, and should be preset to operate at 3 bar (44 lbf/in2). It should be positioned in the flow pipe close to the boiler with no valves or restrictions between the safety valve and the boiler. The safety valve should be positioned, or any discharge pipe so arranged, that discharge of water or steam cannot create a hazard to occupants, or damage electrical components or wiring.

Expansion Vessel

A diaphragm type expansion vessel, complying with the requirements of BS4814, 1990, should be connected at a point close to the inlet side of the pump, in the flow pipe from the boiler. The vessel should be chosen to suit the volume of water in the system and the charge pressure, which should not be less than the static head at the point of connection. Further details can be obtained from "Specification for Domestic Hot Wet Central Heating," published by British Gas.

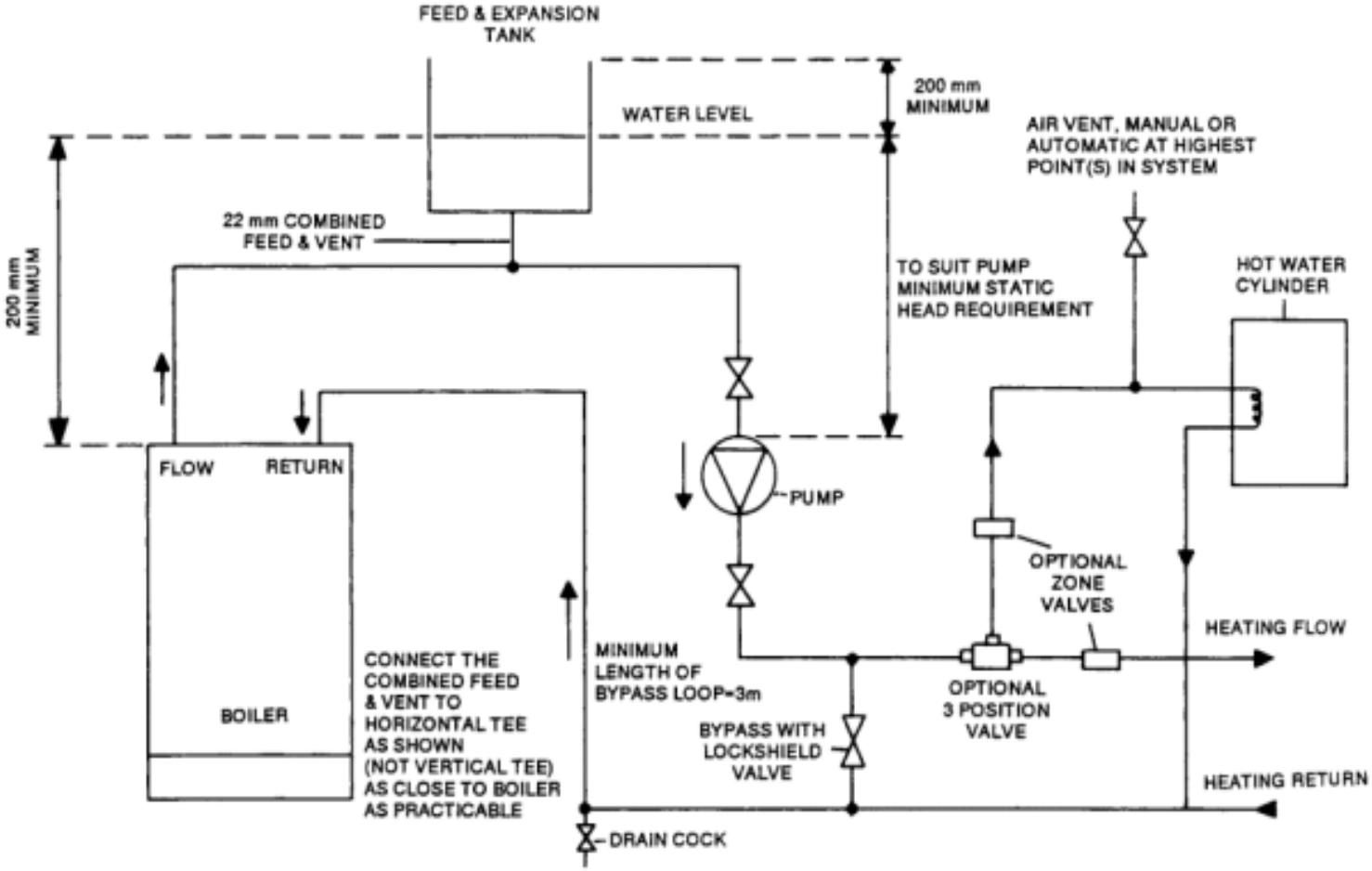

Fig. 4 Fully Pumped Open System - Combined Feed and Vent. (Some water authorities require a stop cock in the cold-feed pipe, in which case this system cannot be used).

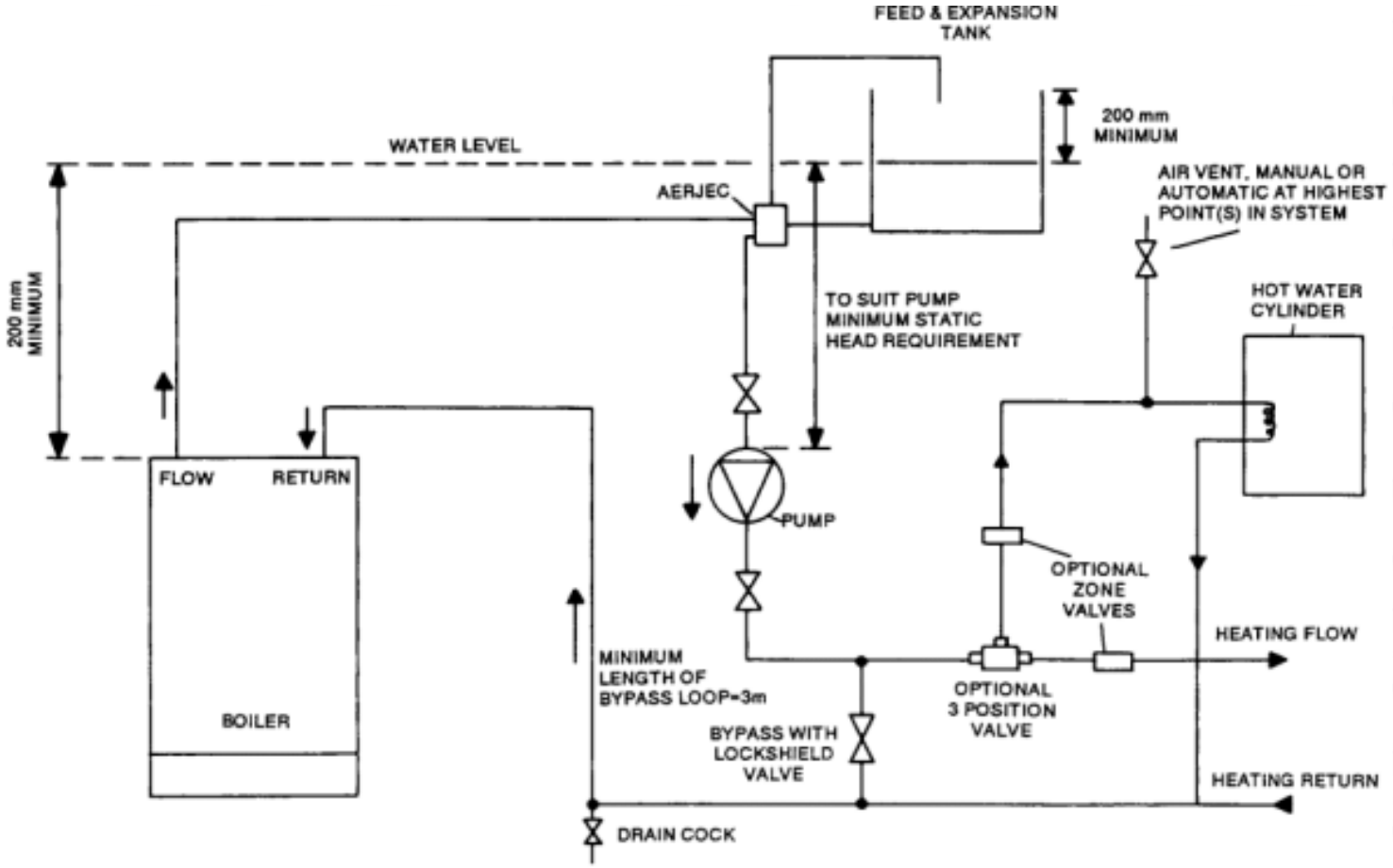

Fig. 5 Fully Pumped Open System - Myson Aerjec.
(Improves air removal from system).

Page 12

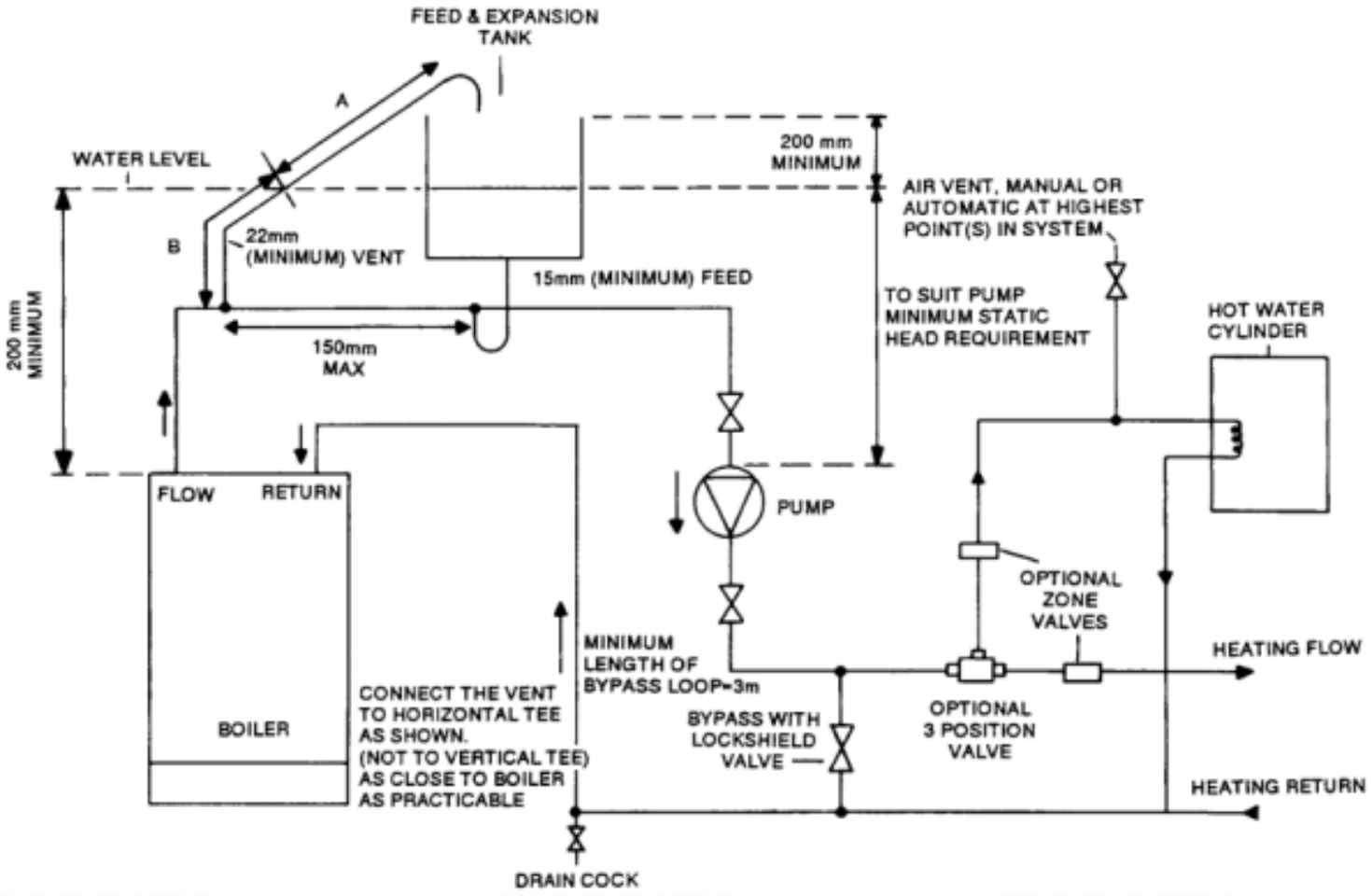

Fig. 6

Fully Pumped Open System - Close Coupled Feed and Vent

MODEL	VENT A	LENGTH B
WM 15/30 BFa	230	260
WM 30/40 BF	330	290
WM 40/50 BF	420	330

A - Length Of Dry Vent
B - Length of Water Filled Vent
Vent lengths do not need to be vertical

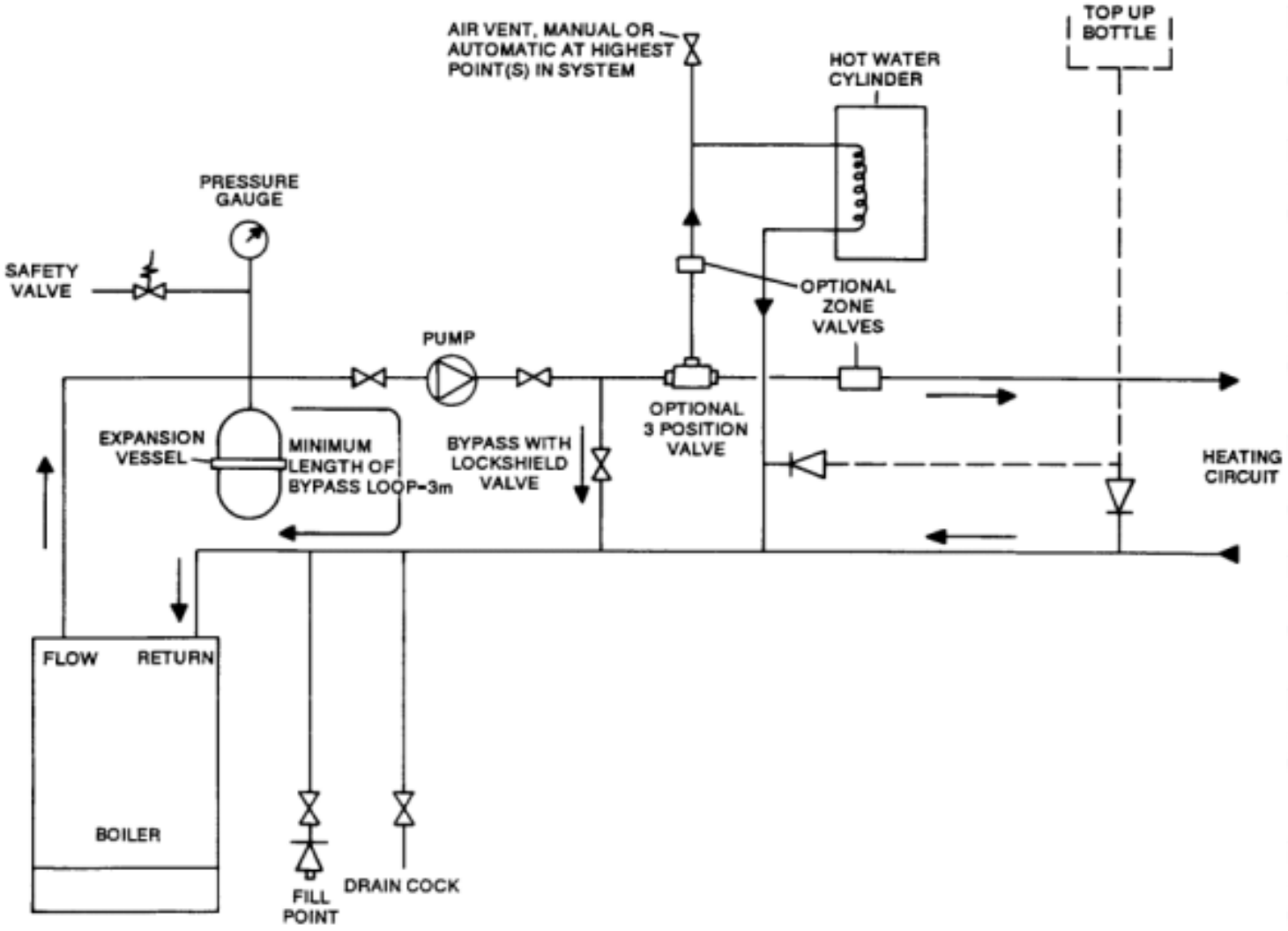

Fig. 7 Fully Pumped Sealed System Piping Diagram.

Page 13

CHARGE PRESSURE (BAR)	0.5			1.0		1.5
Pre-pressurisation pressure (bar)	0.5	1.0	1.5	1.0	1.5	1.5
Expansion vessel volume (litre)	A x 0.066	A x 0.112	A x 0.207	A x 0.087	A x 0.152	A x 0.125

where A = System volume (litre)

Pressure Gauge

A pressure gauge with set pointer and covering at least the range 0 to 4 bar (0 to 58 lbf/in2) should be permanently fitted to the system, so as to be visible to the person carrying out the filling operation.

Hot Water Storage Cylinder

The cylinder should be either an indirect type or a direct type fitted with an immersion calorifier that is suitable for the system pressure.

The cylinder should be to the requirements of BS1566, Part 1, 1984. Single feed (self priming) indirect cylinders must not be used on a sealed system.

Filling and Make-up

There must be no permanent or temporary connection to the mains water supply, or to a water storage cistern supplying domestic water, even through a non-return valve layout, without the approval of the local Water Authority. If the system is to be filled from the mains via a temporary hose, the filling point will require a non-return valve and

anti-vacuum valve on the mains side of the fill point stop valve, both valves UK Water Fittings Byelaws Scheme Listed.

Provision should be made for replacing water lost from the system, from a make-up vessel mounted in position higher than the top point of the system and connected through a non-return valve to the return side of either the hot water cylinder or heating circuit. Alternatively, where access to a make-up vessel would be difficult, provision for make-up can be made by pre-pressurisation of the system.

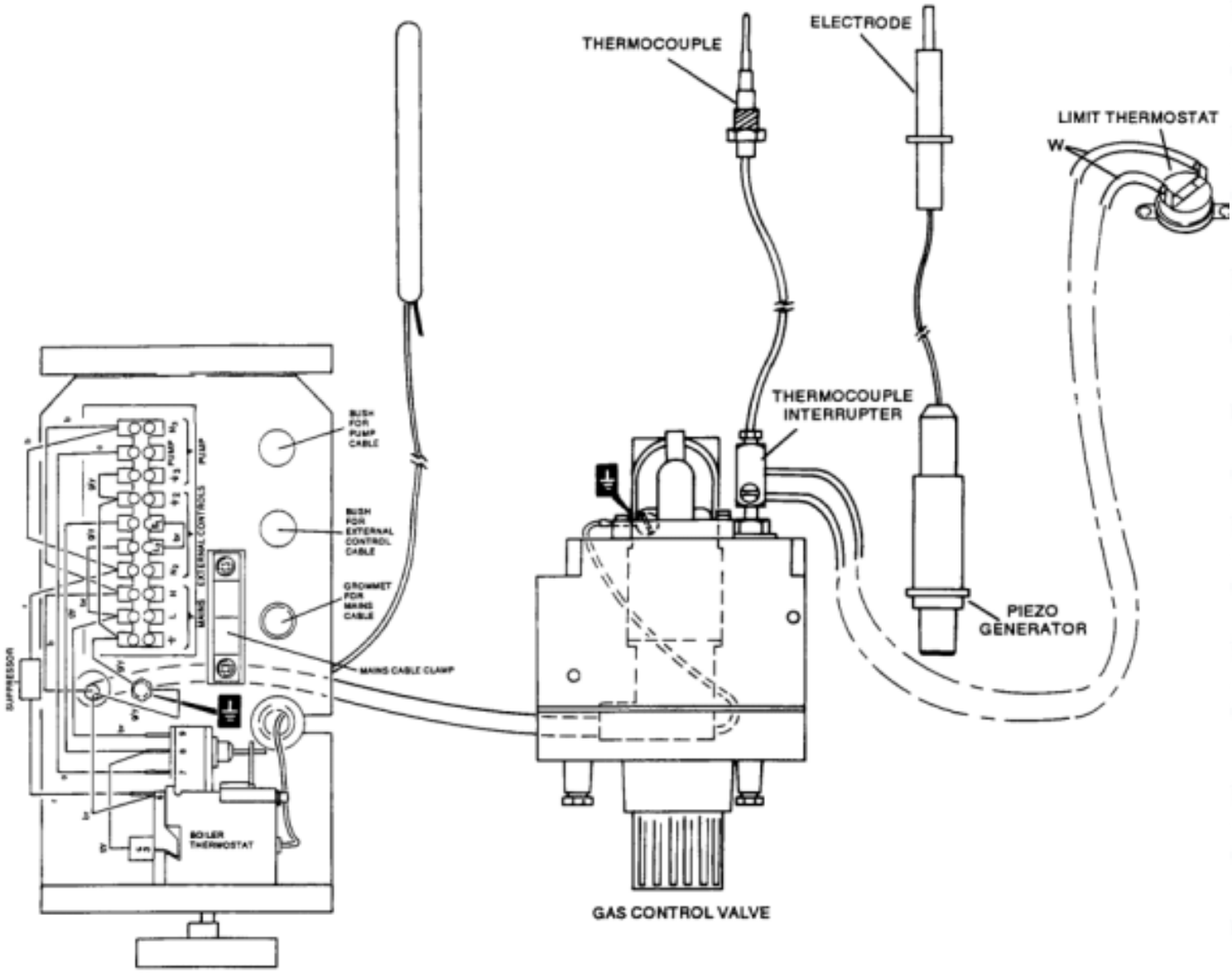

Fig. 8 Control Box Wiring Schematic.

b - blue
br - brown gy - grey
g/y- green/yellow
o - orange
r - red
w - white

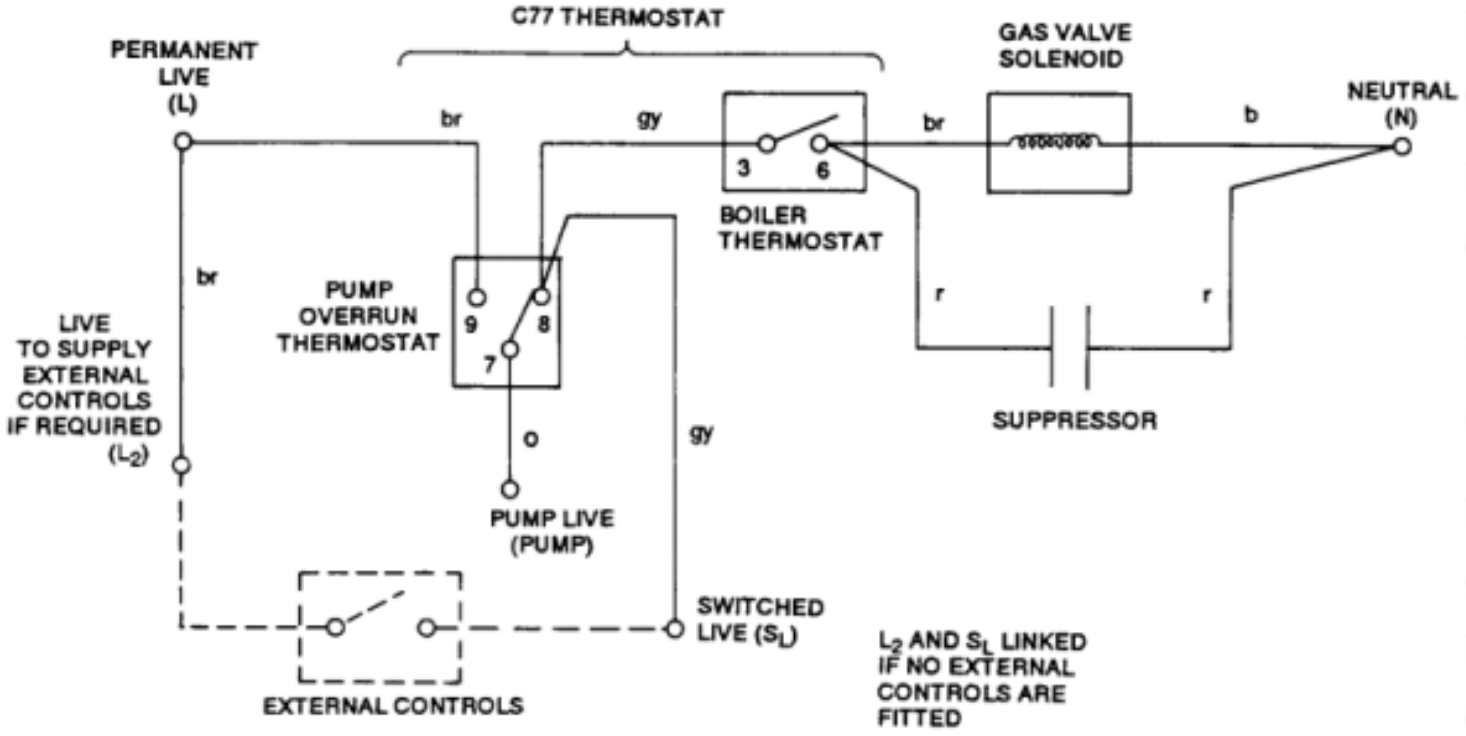

Fig. 9 Function Flow Diagram.

Page 15

6.0 INSTALLATION PROCEDURE

Unpack the boiler. Remove control cover from base of boiler by sliding forward. Remove the main casing locating screws (see Figure 13). Remove casing by pulling forward.

Remove the boiler chassis from the wallplate by removing two wing nuts (B, Figure 10) and disengaging from the lower mounting brackets. Using the wallplate as a template, mark the position of the hole for the air

duct. When positioning the wallplate, due account should be taken of the minimum clearances required for servicing the boiler, as shown in Section 4.2, and check that the top of the wallplate is horizontal.

Cut the air duct hole and make good any plasterwork and brickwork. Realign the wallplate to the air duct hole, ensuring that the wallplate is level, and mark the four wallplate fixing holes (A, Figure 10). Drill and plug the four wallplate fixing holes to accept No. 10 x 50mm (2in) woodscrews. Fix the wallplate to the wall, sealing the gap between the wall and wallplate with a suitable sealant.

Unpack the flue terminal and ducts, slide the telescopic ducts apart. Secure the inner flue duct and then the inner air duct to the back of the boiler, using the seven screws provided (C, Figure 11). Apply

a layer of sealant to seal between the boiler and the wallplate. Lift the boiler and pass the ductwork through the hole in the wall. Engage the bottom of the boiler on the lower mounting brackets and secure the top of the boiler with the two wing nuts (B, Figure 10).

From outside the building, insert the outer flue duct/flue terminal into the wall opening, and slide it into the inner flue duct. Mark the positions of the two flue terminal fixing holes (D, Figure 11). Remove the outer flue duct/flue terminal and make good the external wall surface. Drill and plug the flue terminal fixing holes to accept No. 10 x 25mm (1 in) screws. Apply a layer of sealant, suitable for external use, around the edge of the wall opening. Insert the outer air duct into the wall opening, with the welded seam at the top, and slide it over the inner air duct until the flange seals on the layer of sealant. Seal the join between the two air ducts on the inside with the tape provided.

Locate the outer flue duct/flue terminal into the inner flue duct and slide into position. Fix the flue terminal to the wall with the screws provided.

Connect the gas supply to the boiler, see Section 2.2.

Connect the water system, see Section 5 . Remove the water circulating pump, flush out the system with cold water and replace the pump. Fill the system with water, clear any air locks and check for water soundness, for sealed systems at a pressure of 2.5 bar (36 lbf/in2)

For sealed systems, pressurise the system to check the operation of the safety valve. This should be within 0.3 bar (4 lbf/in2) of the preset pressure of 3 bar (44 lbf/in2). De-pressurise to the desired operating pressure.

Connect the electricity supply, see Section 2.3. Remove the control box cover by undoing the two screws at the front of the box, the cover can then be slid forward and disengaged. Care should be taken not to damage the thermostat capillary which passes through a grommet in the cover, and not to allow the cover to hang on the electrical cables.

A terminal block is provided for the supply connections to the boiler, connections for external controls if required, and connections for the pump, refer to Figures 8 and 9.

The supply connection to the terminal block (L) must be permanent live, unswitched by any external controls. The supply cable should pass through the grommet provided, and should be clamped using the cable clamp provided. The length of the earth wire must be such that if the supply cable slips out of the cable clamp, the live and neutral wires become taut before the earth wire.

If external controls are not to be fitted, leave the factory fitted link from L2 to SL in position. Otherwise remove the link.

The connection L2 is a permanent live, internally linked to L, and is provided to feed external controls if required. SL is the switched live from the external controls, N_2 and $⏚_2$ are neutral and earth connections for external controls as required.

The connection PUMP is for the pump live, N_3 and ⏚_3 are neutral and earth connections for the pump if required.

The cable(s) to the external controls and pump should be clamped using the bushes provided. Allow 150mm (6in) of slack in all cables to facilitate servicing.

In the event of an electrical fault after installation, preliminary checks should be carried out, ie earth continuity, polarity and resistance to earth, as described in the Minitest Multimeter handbook..

Do not refit the casing at this stage.

Page 16

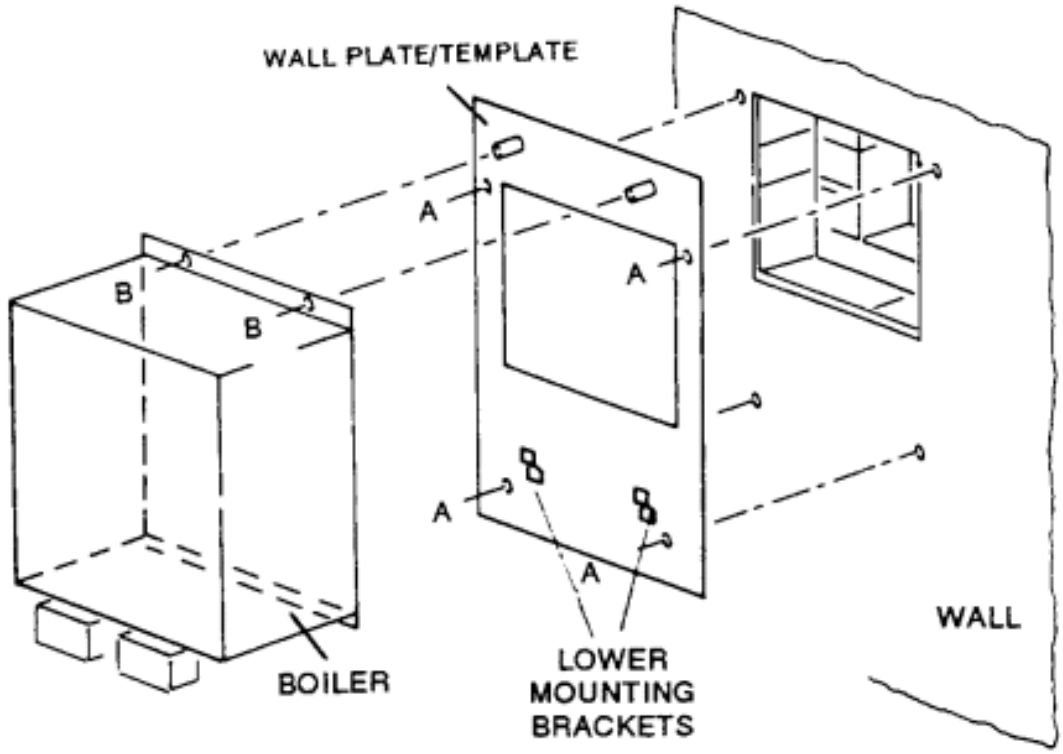

Fig. 10 Boiler Wall Fixing

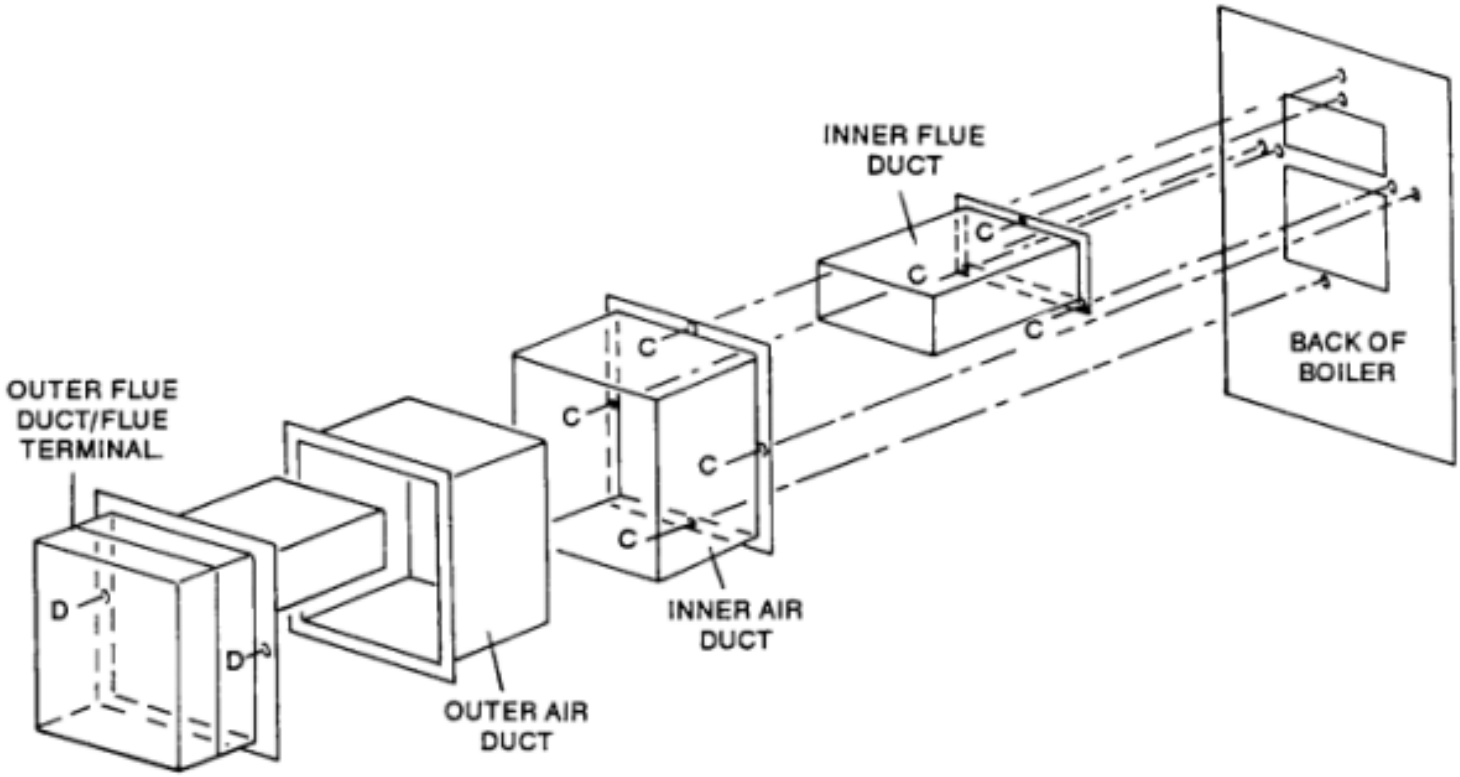

Fig. 11 Flue Duct /Terminal Assembly.

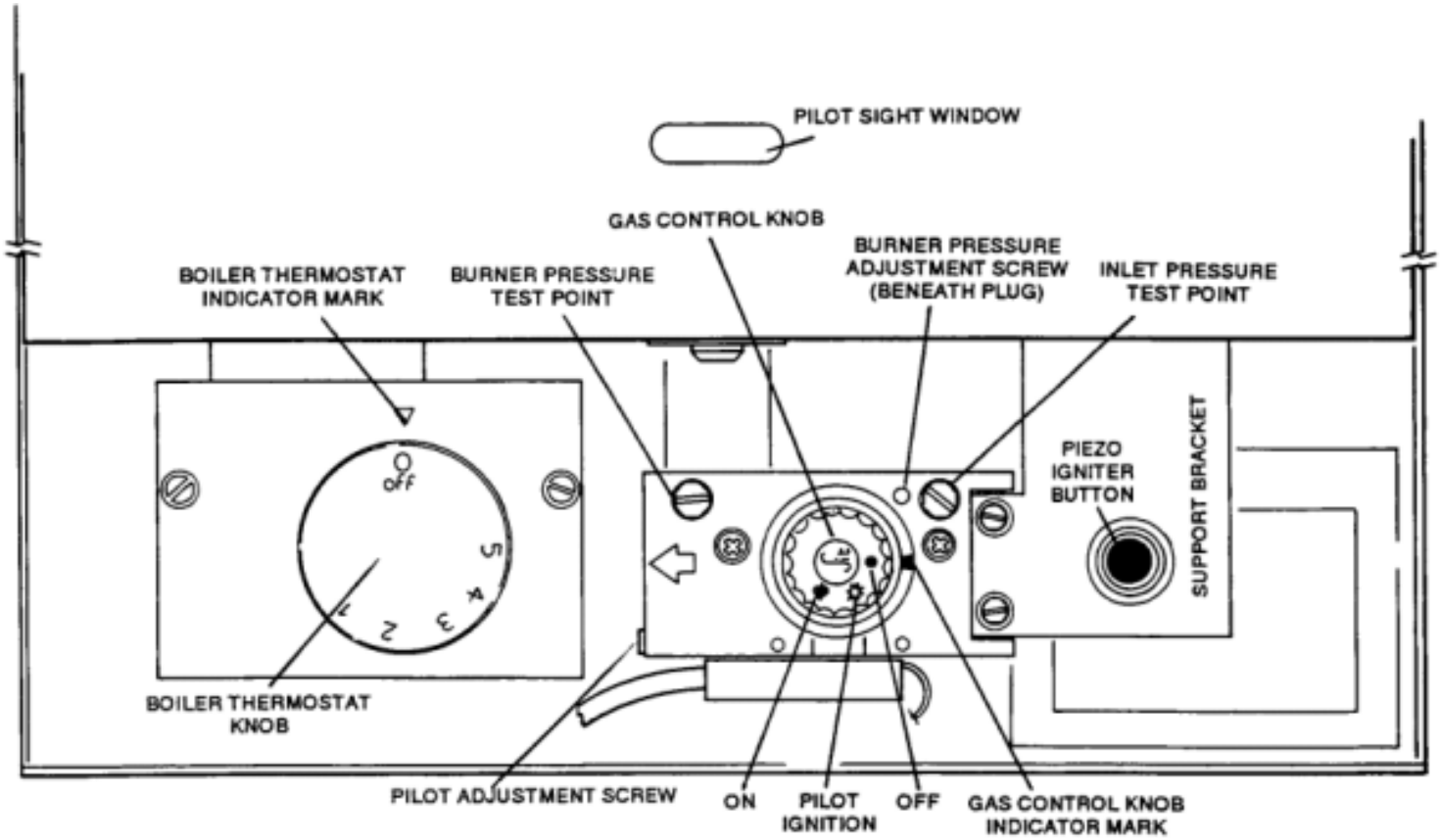

.

Fig. 12 View of Gas Controls

7.0 INITIAL LIGHTING

See Figure 12

a Check that the electricity supply and gas service cock are OFF.

b Remove the screw from the gas control valve inlet pressure test point.

c Turn on the gas supply and open the gas service cock to purge air from the appliance supply pipe.

d Replace the gas control valve inlet pressure test point screw and allow the purged gas to disperse.

e Check that the gas control knob is turned fully clockwise to the OFF position (●) and that the boiler thermostat knob is turned fully anti-clockwise to the OFF position.

f Remove the burner pressure test screw and connect a pressure gauge.

g Turn qas control knob anti-clockwise to the PILOT position (★), push in and hold it depressed.Push in and release the piezo igniter button repeatedly until the pilot flame can be seen through the sight window. When the pilot has lit, continue to press in the gas control knob for a further fifteen seconds, then release. The pilot should stay alight.

h SHOULD THE PILOT GO OUT AT THIS OR ANY OTHER STAGE, TURN GAS CONTROL KNOB CLOCKWISE TO THE OFF POSITION(●) AND WAIT FOR THREE MINUTES. Then repeat instruction "g."

i Check that the pilot flame envelopes the thermocouple tip by 6-8mm (see Figure 14). Refer to the fault finding section if the pilot flame is not satisfactory. Remove the combustion chamber door (see Section 9.1.2) and check for gas soundness at the pilot tube nut on the pilot assembly. Replace the door, ensuring all screws are fully tightened.

j Push in and turn gas control knob anti-clockwise to the ON position( ). Set the boiler thermostat to Setting 5, and ensure all external controls are calling for heat.

k Switch on the electricity supply and check that the main burner lights smoothly from the pilot. Test for gas soundness around all boiler gas components using leak detection fluid.

l Allow the boiler to operate for approximately 10 minutes, then check the burner gas pressure. Note

that the boiler is factory preset to give its maximum heat output.

m Adjust the burner gas pressure to the figures shown in the Technical Data Section. The pressure adjustment screw location is shown on Figure 12 . After removal of the plastic plug, turn the screw anti-clockwise to increase the pressure, and clockwise to decrease the pressure. Check that the flames are not yellow tipping or lifting off. If the appliance gas rate is in doubt, check by timing one or more revolutions of the gas meter.

n Replace the plastic plug for the pressure adjustment screw, to prevent unauthorised adjustment, and mark the appliance data badge (situated on lower right hand side of wallplate) with the arrow provided, to show the burner pressure and heat output, that the appliance has been set to.

o Switch OFF electricity supply, disconnect pressure gauge, and replace burner pressure t est point screw. Check for gas soundness at the test point.

p Check the operation of the flame failure device in the gas control valve as follows. With the main burner lit, turn off the gas supply at the service cock. A "click" indicating that the device has operated should be heard within 60 seconds of turning off the gas.

q Check that the boiler and all external controls operate satisfactorily.

r Check that the thermocouple output is in the range 6-10mV closed circuit.

8.0 COMMISSIONING

Light the boiler and heat the system to the maximum working temperature. The maximum boiler thermostat setting is 79°C (174°F).

Examine for leaks, turn boiler off, and drain system while hot. Refill and vent system. For sealed systems, adjust the cold fill pressure to the required setting, and then disconnect any temporary connection to the mains water supply.

8.1 SYSTEM BYPASS

It is important that the water flow rate through the boiler does not fall below the figure shown in the Technical Data Section, at any time when the boiler is firing. Therefore a bypass must be fitted.

To adjust the bypass, fire the boiler with a full load, ie central heating and domestic hot water both on, and the bypass fully closed. Adjust the pump to give a temperature rise of 11 °C (20°F) across the system. The system should then be switched to minimum load, ie central heating only with the radiator valves turned off. If noise is experienced under these conditions, the bypass valve should be gradually

opened to increase the flow rate through the boiler until the noise stops.

NOTE: When the boiler is first fired, a smell may occur. This will clear within a few hours of operation.

NOTE: A limit thermostat is fitted to the boiler, wired to interrupt the thermocouple circuit, and so causing safety shut down in the event of an overheat condition. This limit thermostat is of a self-resetting type. Should the thermostat trip during commissioning, allow the system to cool, then relight the boiler.

Refit the casing and control cover. Hand all instructions to the user or purchaser for retention. Demonstrate and explain the safe and efficient operation of the boiler. Advise the user or purchaser that for continued efficient and safe operation of the boiler, it is important that servicing is carried out annually.

Page 19

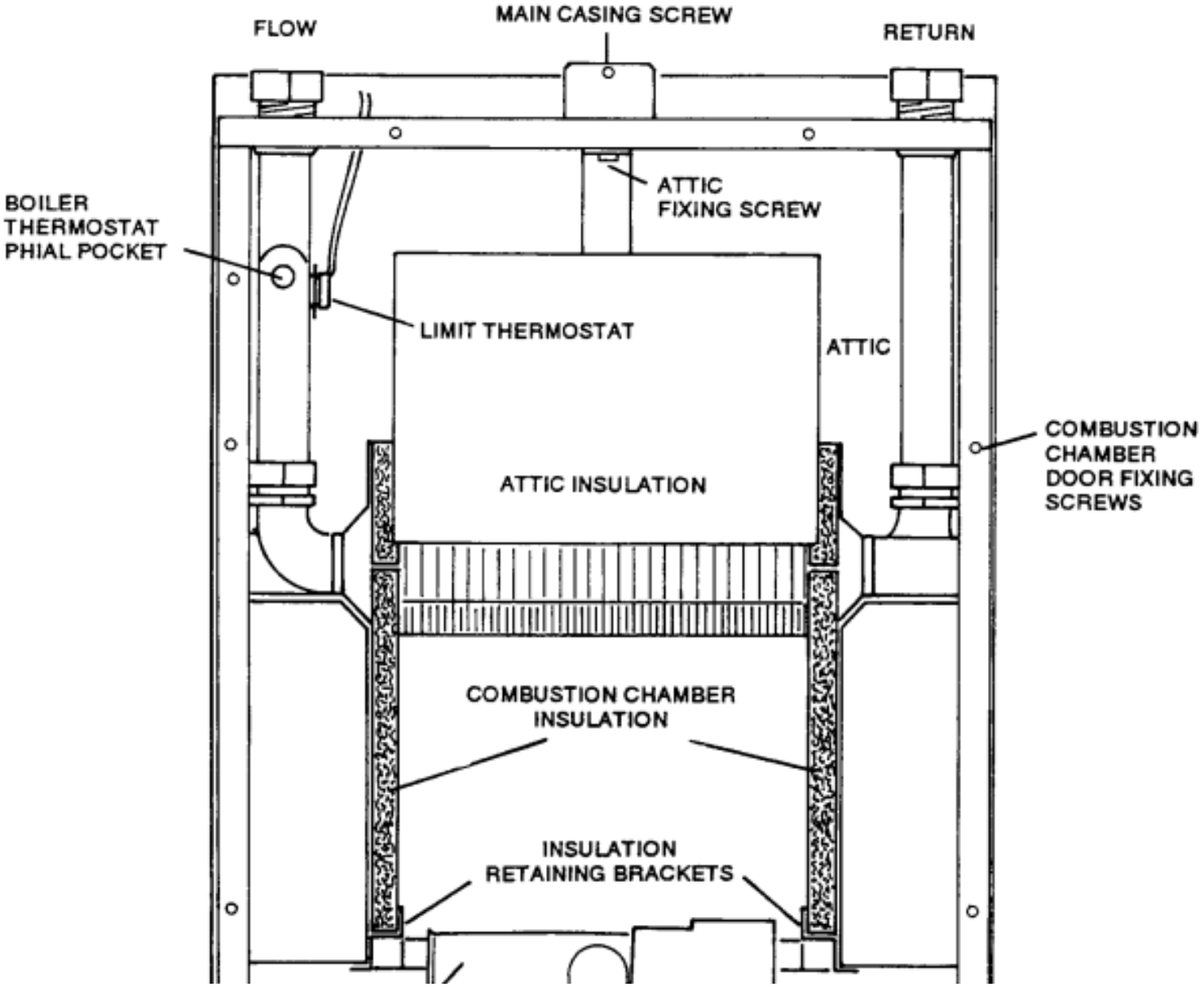

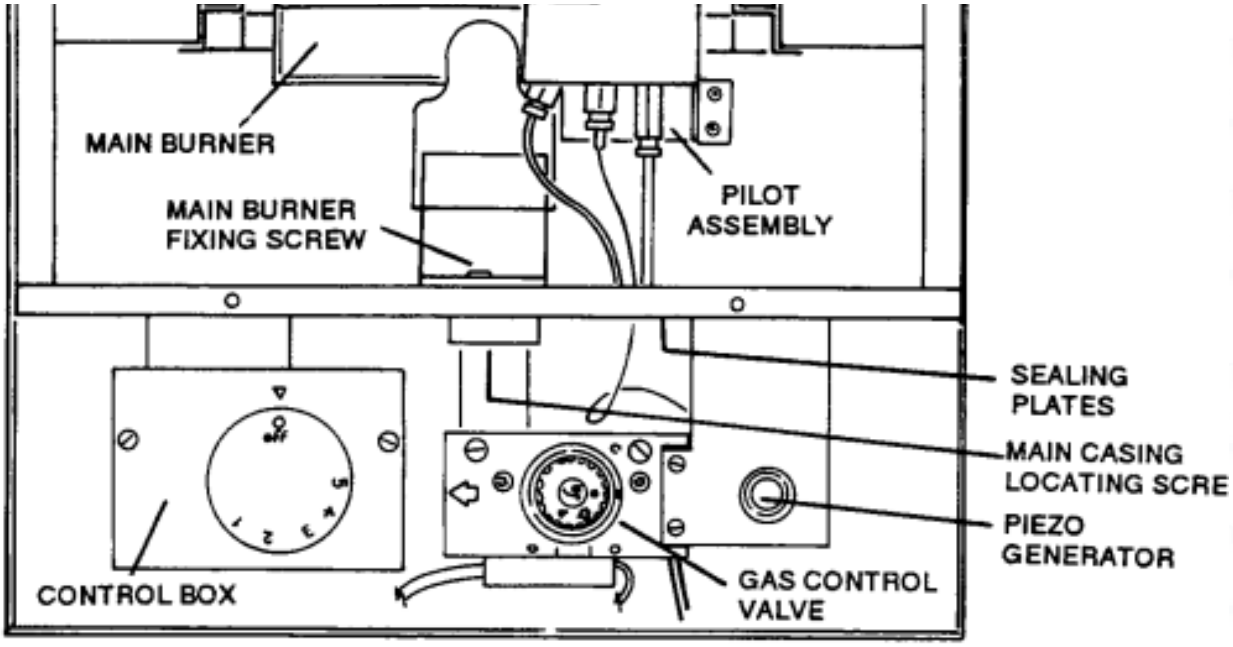

Fig. 13 Internal Layout of Boiler.

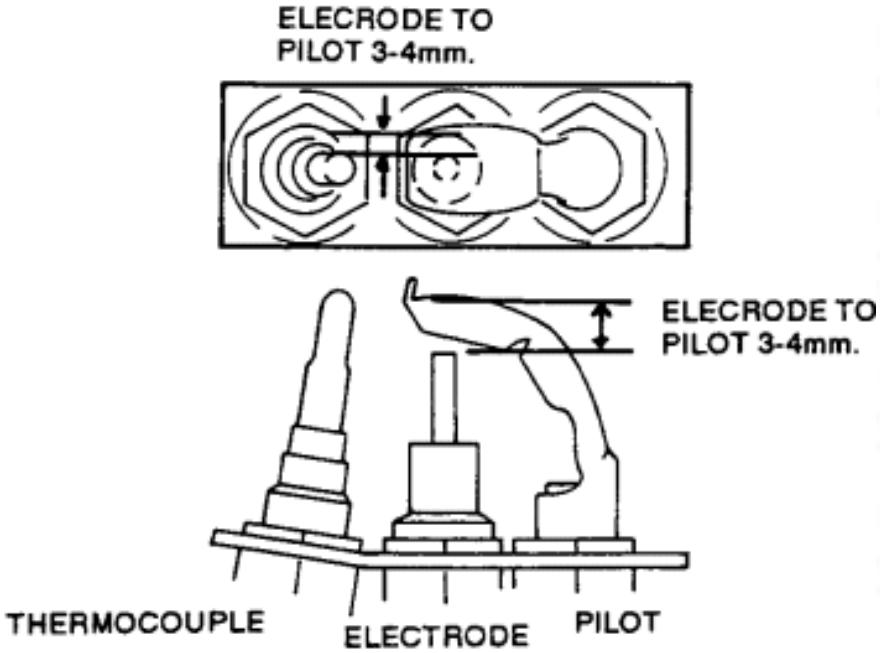

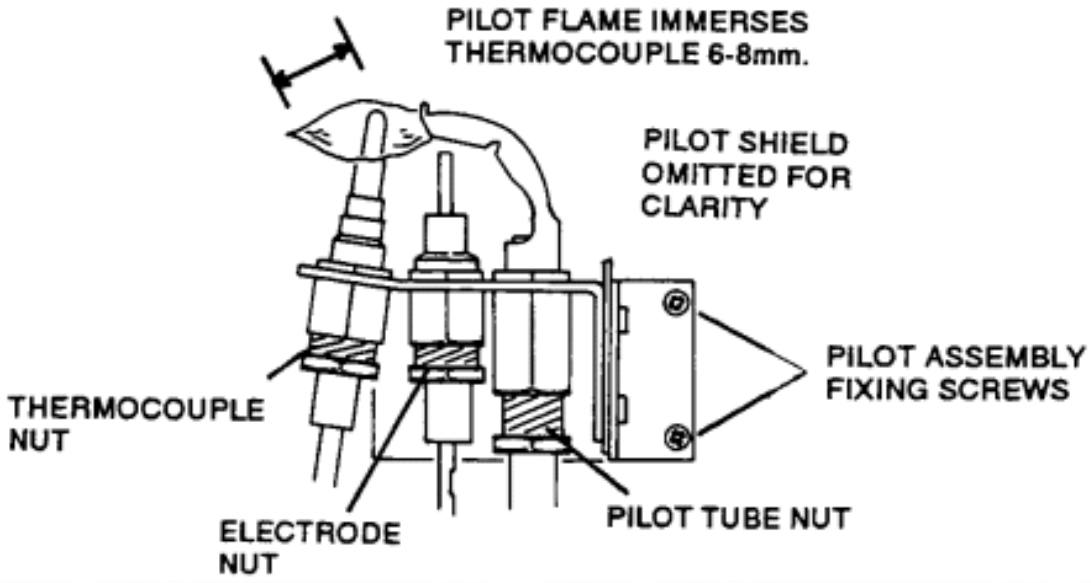

Fig. 14 Details of Pilot Assembly.

Fig. 1 5 Location of Thermostat Phial.

Page 20

9.0 SERVICING

This section describes the annual servicing procedure, and gives instructions for the replacement of faulty parts. Servicing must be carried out by a competent person at least once a year.

WARNING: ALWAYS TURN OFF THE GAS SUPPLY AT THE INLET SERVICE COCK, AND SWITCH OFF AND DISCONNECT THE ELECTRICITY SUPPLY TO THE APPLIANCE, BEFORE COMMENCING SERVICING.

9.1 Annual Routine Service

This is normally confined to cleaning the main burner, main injector, pilot injector and heat exchanger, and checking the operation of boiler control.

9.1.1 Removal of Outer Casing (see Figure 13)

Remove the control cover by pulling forward. Remove the main casing locating screws. Gently pull casing forward to remove. On replacement, check that the clips for the thermostat capillary are not dislodged.

9.1.2 Removal of Combustion Chamber Door (see Figure 13)

a Remove the split pin from the thermostat phial pocket. Remove the fixing screws for the thermostat pocket cover, leaving the cover on the capillary.

b Remove eight screws and remove door.

9.1.3 Removal of Main Burner (see Figure 13)

a Slacken the two screws through the sealing gasket at the front of the base of the boiler.

b Unscrew the thermocouple nut at the base of the pilot assembly, releasing the thermocouple, withdraw nut.

c Unscrew the electrode nut at the base of the pilot assembly, remove electrode.

d Unscrew the pilot tube nut at the base of the pilot assembly, releasing the pilot tube.

e Remove the two brass screws securing the pilot assembly to the main burner, lift away the complete pilot assembly. Note that the pilot injector is loosely attached to the olive on the pilot tube.

f Remove the fixing screws securing the main burner to the base of the boiler. Remove the main burner by pulling forward and tilting upward, taking care not to damage the thermocouple or pilot tube.

g Inspect the burner and lightly brush off any deposits.

9.1.4 Inspect the Main and Pilot Injectors

If these require cleaning, use water or air. Do not use a pin or wire.

9.1.5 Inspect the Thermocouple

If the thermocouple tip is burnt away or cracked, replace the thermocouple (see Section 9.2) 9.1.6 Inspect the Electrode

If the electrode is damaged, replace (see Section 9.2)

9.1.7 Inspect the Heat Exchanger

a Inspect the heat exchanger for deposits. If these are evident, remove the attic fixing screw, and remove the attic by pulling forward. Remove the two attic insulation pieces.

b Remove the two combustion chamber side insulation retaining brackets (see Figure 13) by pulling forward, remove the two side insulation pieces by easing down, then forward.

c Brush the heat exchanger from above and below, using a stiff brush. The brush motion should be from front to back, NOT from side to side. Remove all deposits from base of boiler.

9.1.8 Reassembly

Reassemble the components in reverse order, noting:

a The main burner must be correctly located on the injector.

b The pilot injector must be repositioned on the pilot tube.

c The electrode nut must not be overtightened.

d Any damaged insulation must be replaced.

e All combustion chamber door fixing screws must be fully tightened, checking that a good seal is made.

9.1.9 Final Checks

Restore the gas and electricity supply to the boiler and check:

a For gas soundness. The pilot tube nut at the pilot assembly should be checked before the combustion chamber door is refitted.

b That the burner pressure is set to give the correct output for the system. The data badge showing the correct burner pressure is located on the lower right hand corner of the wallplate.

c For the correct operation of the flame failure device. Check that the thermocouple output is 6-10mV closed circuit.

d For the correct operation of the system controls.

9.2 Replacement of Parts (see Figure 13)

Please quote Boiler Serial No. when ordering spare parts.

WARNING: ALWAYS TURN OFF THE GAS SUPPLY AT THE INLET SERVICE COCK, AND SWITCH OFF AND DISCONNECT THE ELECTRICITY SUPPLY, BEFORE WORKING ON THE APPLIANCE.

It will be necessary to remove the outer casing (see Section 9.1.1) before replacing any of the following parts. After servicing, always check for gas soundness and for functional operation.

9.2.1 Replacement of Main Injector

a Remove main burner (see Sections 9.1.2 and 9.1.3).

b Unscrew main injector from the manifold at the rear of the boiler.

c Reassemble in reverse order. When replacing, use a little gas jointing compound on the injector threads to ensure gas soundness (see Section 9.1.8).

9.2.2 Replacement of Thermocouple

a Remove combustion chamber door (see Section 9.1.2).

b Unscrew the thermocouple nut at the base of the pilot assembly, releasing the thermocouple.

c Remove the two sealing plate screws, then remove the sealing plates and gasket from the front of the base of the boiler.

d Remove the electrode lead from the electrode, and withdraw through the hole in the base of the boiler.

e Unscrew the thermocouple connection at the interrupter at the side of the gas control valve, and remove the thermocouple.

f Reassemble in reverse order, bending the new thermocouple to match the discarded one. No bend should be less than 12mm (1/2in) internal radius. Check that the interrupter is held in position by the thermocouple, but do not overtighten this connection.

9.2.3 Replacement of Electrode

a Remove combustion chamber door (see Section 9.1.2).

b Unscrew the thermocouple and electrode nuts at the base of the pilot assembly.

c Disconnect the electrode lead and remove the electrode.

d Reassemble in reverse order (see Section 9.1.8). Check that the electrode gap is 3-4mm (see Figure 14).

9.2.4 Replacement of Pilot Assembly and Pilot Injector)

a Remove combustion chamber door (see Section 9.1.2).

b Remove pilot assembly and pilot injector (see Section 9.1.3).

c Reassemble in reverse order (see Section 9.1.8).

Note: that if the steel pilot pipe is also being replaced, a considerable tightening torque is required to initially clamp the steel olive onto the pipe. Care should be taken to support the pilot assembly to prevent distortion,alternatively the initial tightening can be carried out whilst the pilot assembly is removed and held in a vice.

9.2.5 Replacement of Multi-Functional Gas Control Valve

a Remove combustion chamber door (see Section 9.1.2).

b Remove main burner and injector (see Section 9.1.3 and 9.2.1).

c Unscrew the pilot tube nut at the rear of the gas control valve.

d Unscrew the thermocouple connection at the interrupter at the rear of the gas control valve, remove interrupter body. The lock nut need not be removed.

e Loosen screw in the electrical plug housing in the base of the gas control valve, remove the plug by pulling forward.

f Remove the earth wire screw from the base of the gas control valve, remove the earth wire.

g Unscrew the union nut of the inlet service cock.

h Remove lead from piezo generator. Remove three screws from the piezo generator bracket.

i Remove two screws securing the injector manifold to the base of the boiler, remove injector manifold and gas control valve.

j Turn gas control valve anti-clockwise to unscrew it from the injector manifold, remove gas inlet pipe from gas control valve.

k Reassemble in reverse order (see Section 9.1.8). Note that the earth wire should be connected before the electrical plug.

l Light boiler and check for gas soundness. Check for correct operation of the gas control valve, and adjust the burner pressure to suit the system requirements.

9.2.6 Replacement of Boiler Thermostat

a Remove the split pin from the thermostat phial pocket, withdraw spacer and thermostat phial.

b Unclip the thermostat capillary from the side of the boiler.

c Remove the thermostat knob by pulling off.

d Remove the outer two screws from the front of the thermostat control box, slide the control box forward.

e Carefully note the positions of the electrical connections to the boiler thermostat, detach the leads from the thermostat.

f Remove the two thermostat mounting screws, remove the thermostat.

g Reassemble in reverse order. The thermostat should be positioned so that the capillary exits from the right hand side. The phial and spacer should be located as in Figure 15 .

9.2.7 Replacement of Limit Thermostat

a Remove combustion chamber door (see Section 9.1.2).

b Remove attic fixing screw and remove attic by pulling forward.

c Remove the two thermostat sensor mounting screws from the boiler flow pipe.

d Disconnect the limit thermostat leads from the adaptors on the gas control valve.

e Remove the grommet from the top of the boiler, remove limit thermostat and leads.

f Reassemble in reverse order.

9.2.8 Replacement of Piezo Generator

a Detach electrode lead from rear of piezo generator.

b Remove piezo generator mounting nut, remove generator from bracket.

c Reassemble in reverse order.

9.2.9 Replacement of Heat Exchanger

a Drain down the heating system.

b Remove combustion chamber door (see Section 9.1.2).

c Remove the attic fixing screw and remove the attic by pulling forward. Remove the two attic insulation pieces.

d Remove the two combustion chamber side insulation pieces (see Section 9.2.10).

e Unscrew the flow and return compression fittings above the boiler and break the connections.

f Unscrew the flow and return compression fittings on the heat exchanger.

g Loosen the flow and return pipe back nuts, on the top of the boiler.

h Tilt heat exchanger up at front, remove flow and return pipes. Remove heat exchanger.

i Reassemble in reverse order.

9.2.10 Replacement of Combustion Chamber Insulation Pieces

a Remove combustion chamber door (see Section 9.1.2).

b Lift the front insulation pieces to clear the bottom retaining brackets. Remove by pulling slightly forward at the top to clear the door edge and lifting the insulation.

c Remove the two side insulation retaining brackets by pulling forward, remove the side insulation pieces by easing down then forward.

d Remove the attic fixing screw and remove the attic by pulling forward. Remove the two attic insulation pieces.

e Slacken the flow and return pipe locknuts (not the pipe nuts) on top of the boiler, pull the heat exchanger forward slightly to release and remove the upper rear insulation piece.

f Lift the bottom rear insulation piece to clear the retaining bracket, then remove by pulling forward at the base.

g Reassemble in reverse order.

10.0 FAULTFINDING

Before attempting any electrical fault finding, ALWAYS carry out the preliminary electrical system checks, as detailed in the Minitest G Multimeter Handbook. Also see Figures 8 and 9.

10.1 Pilot will not light

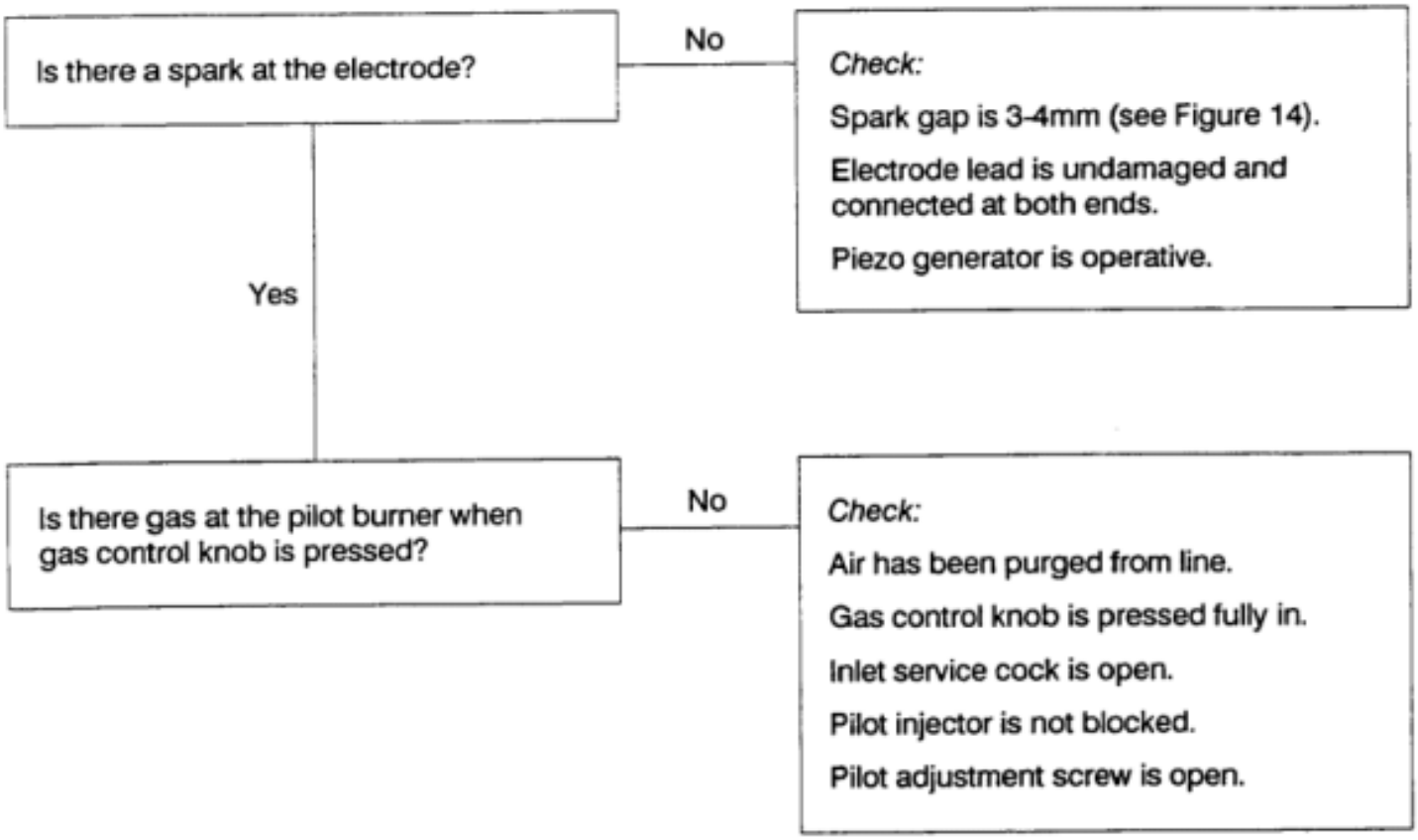

Page 27

10.2 Pilot does not stay alight when gas control knob is released

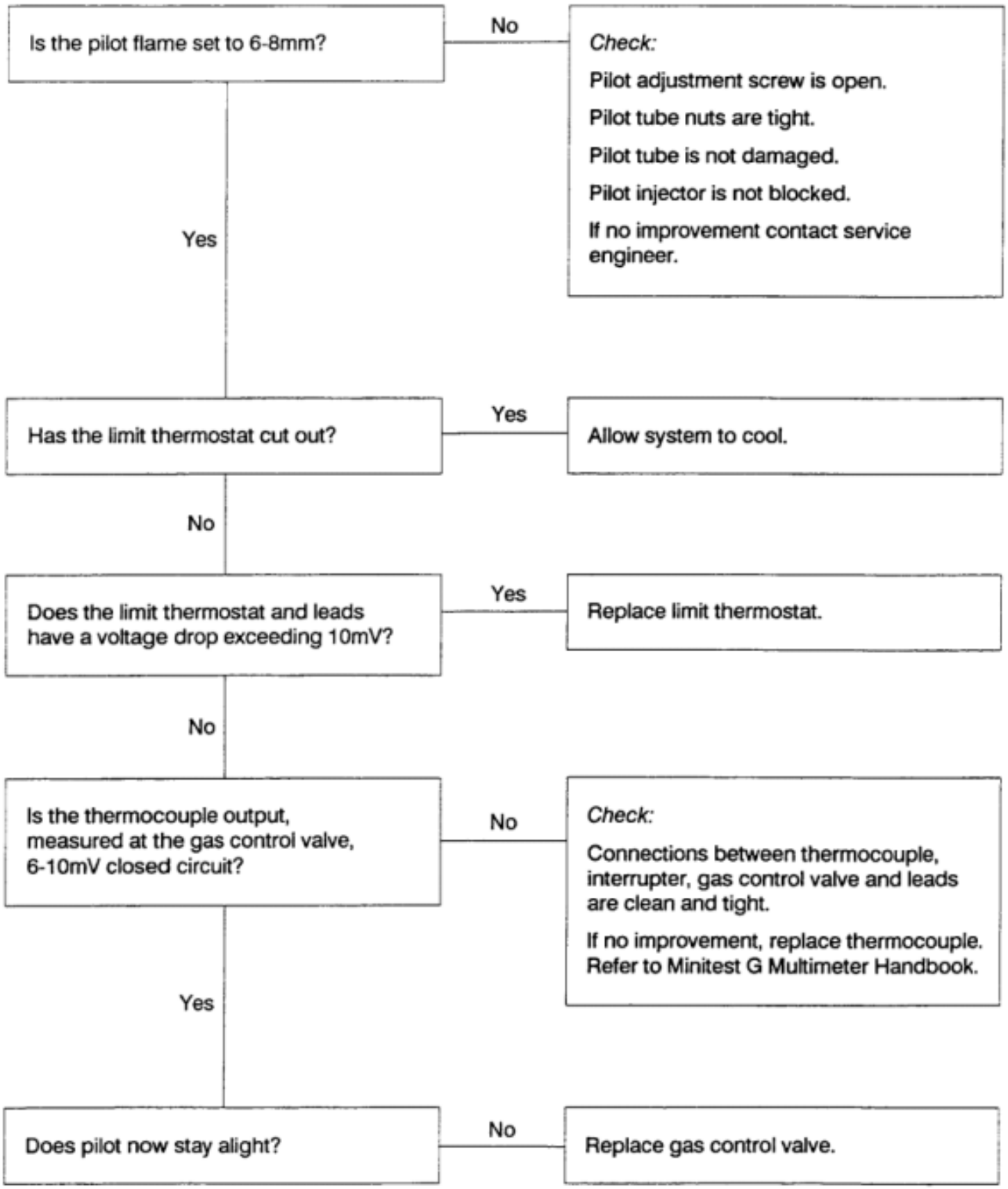

http://www.partsarena.com/baxi/System/DATA/Dx/DS1/installation/2102/I01-2102/I01-2102.htm (38 of 44)14/10/2004 17:30:48

10.3 Pilot lit, main burner will not light

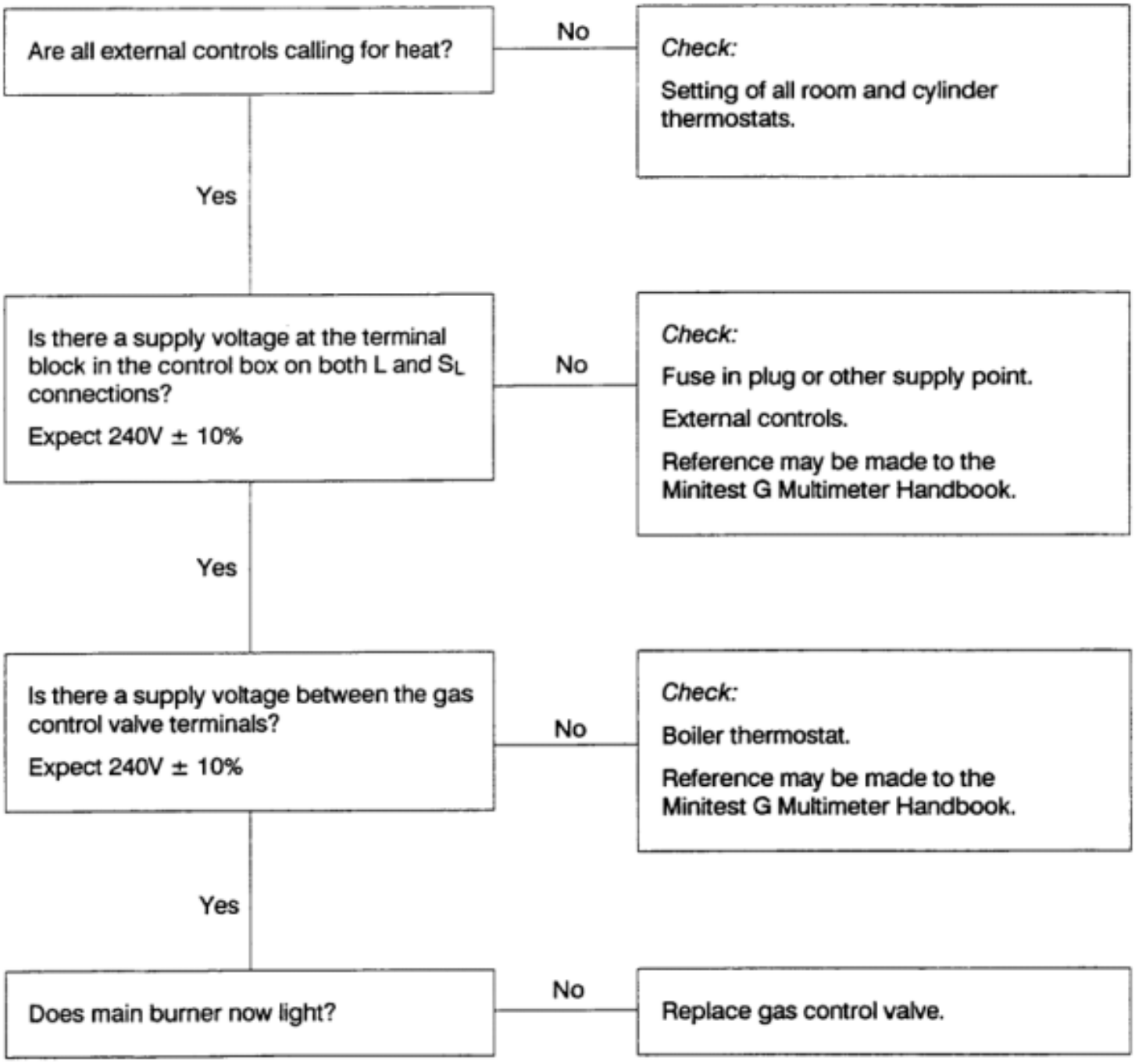

10.4 Boiler shut down by limit thermostat

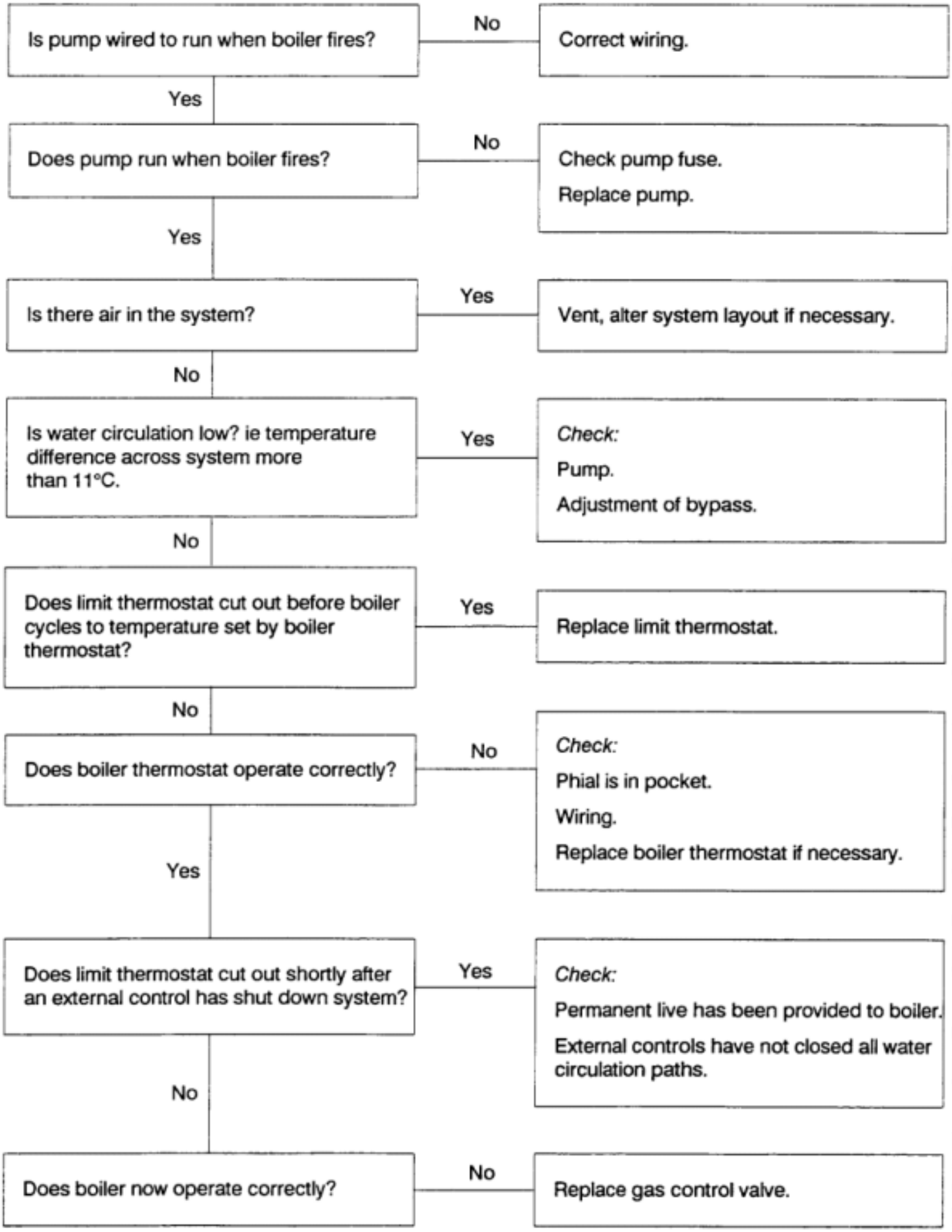
Is pump wired to run when boiler fires?
No
Correct wiring.
Yes
Does pump run when boiler fires?
No
Check pump fuse.
Replace pump.
Yes
Is there air in the system?
Yes
Vent, alter system layout if necessary.
No
Is water circulation low? ie temperature difference across system more than 11°C.
Yes
Check:
Pump.
Adjustment of bypass.
No
Does limit thermostat cut out before boiler cycles to temperature set by boiler thermostat?
Yes
Replace limit thermostat.
No
Does boiler thermostat operate correctly?
No
Check:
Phial is in pocket.
Wiring.
Replace boiler thermostat if necessary.
Yes
Does limit thermostat cut out shortly after an external control has shut down system?
Yes
Check:
Permanent live has been provided to boiler.
External controls have not closed all water circulation paths.
No
Does boiler now operate correctly?
No
Replace gas control valve.

11.0 SHORT LIST OF SPARE PARTS

WM1 5/30 BFa, WM30/40 BF, WM40/50 BF

KEY NO.	BGC PART NO.	ITEM	NO. OFF	MAKERS PART NO.
12	323-510	Sight Glass Assembly	1	68/2515/01
13	323-511	Sight Glass Gasket	1	68/2515/06
35	381-749	Multifunctional Gas Control S.I.T. 0.680.009	1	68/2021/02
38	382-496	Injector WM15/30 BFa 2.7mm diameter	1	68/0033/01
38	323-864	Injector WM30/40 BF 3.0mm diameter	1	68/0033/02
38	323-892	Injector WM40/50 BF 3.3mm diameter	1	68/0033/03
41	382-495	Main Burner WM15/30 BFa Furigas	1	68/0032/01
41	381-868	Main Burner WM30/40 BF Furigas or Bray	1	68/0032/02
41	381-880	Main Burner WM40/50 BF Furigas or Bray	1	68/0032/03
42	381-865	Pilot Assembly S.I.T. 0.140.020	1	68/2021/09
47	381-949	Pilot Injector, size 34 S.I.T. 0.977.103	1	68/2021/26
52	386-775	Electrode S.I.T. 0.007.226	1	68/2021/13
54	323-812	Electrode Lead	1	68/2509/13
55	394-214	Piezo Generator Vernitron 66212	1	68/2021/14
57	381-713	Thermocouple S.I.T. 0.290.161	1	68/2021/39
71	323-534	Boiler Thermostat Knob	1	68/2508/09
107	397-832	Limit Thermostat Therm-O-Disc 36TZE21	1	68/2014/10

118	397-833	Pump Overrun Boiler Thermostat Type 2, Ranco C77	1	68/2021/42

Page 31

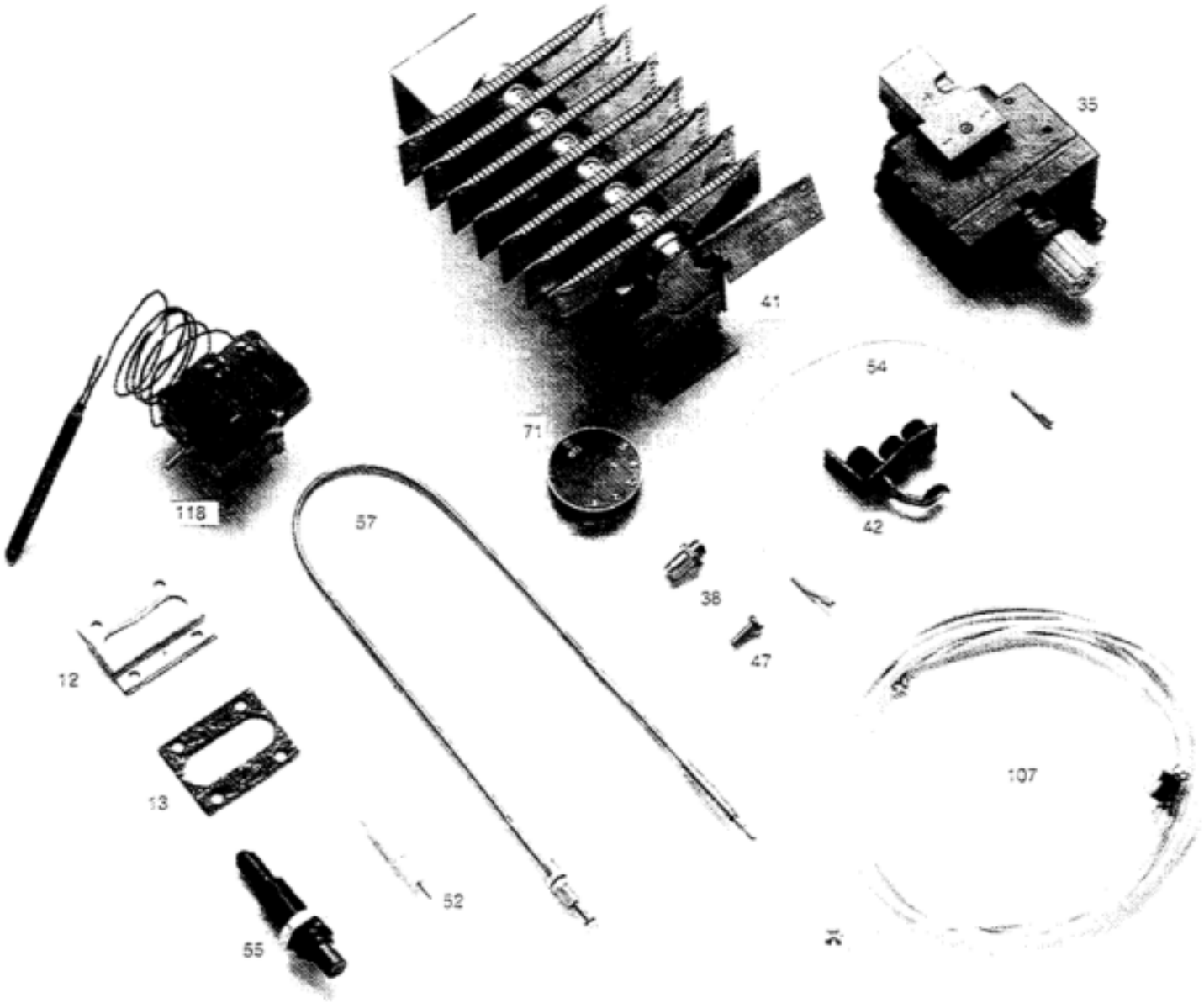

Page 32

Page 32a

SALES INQUIRIES:

Sales Department
Eastern Avenue
Team Valley Trading Estate
Gateshead
Tyne & Wear
NE11 0PG

Tel: 0191 4917500
Fax: 0191 491 7568

SERVICE INQUIRIES:

Service Department
Brooks House
Coventry Road
Warwick
CV34 4LL

Tel: 01926 496896
Fax: 01926 410006

SPARES INQUIRIES:

Curzon Components
National Sales Office
Unit 382F
Jedburgh Court
Eleventh Avenue
Team Valley Trading Estate
Gateshead
NE11 0BQ

Tel: 0990 103030
Fax: 0191 4876688

TECHNICAL HELPLINE:

Technical Department
Brooks House
Coventry Road
Warwick
CV34 4LL

Tel: 01926 410044
Fax: 01926 410006

TRAINING ADMINISTRATION

Unit 5
Titan Business Centre
Spartan Close
Tachbrook Park
Leamington Spa
Warwickshire
CV34 6RS

Tel: 01926 430481
Fax: 01926 882971

Registered Office: 84 Eccleston Square . London SW1V 1PX

Registered in England No. 412935

"All descriptions and illustrations contained in this catalogue have been carefully prepared, but we reserve the right to make changes and improvements in our products which may affect the accuracy of the information contained in this catalogue"

OMYSON

OMYSON

Page 33