NU-WAY
Enertech Group

Installation & Maintenance Manual

MDFL 1510
MDFL 1880
MDFL 2505
MDFL 2705

Dual Fuel Burner

Tel: +44 (0) 1905 794331 **Fax:** +44 (0) 1905 794017 **Email:** info@nu-way.co.uk **Web:** www.nu-way.co.uk

Contents

1. General information 3
2. Scope of delivery 3
3. Maintenance and customer service 3
4. Operating instructions 3
5. Instruction of operating personnel 3
6. Filter/Strainer 3
7. Key for code designation 4
8. Technical specifications 4
9. Boiler connection dimensions 4
10. Ignition electrode 5
11. Flame failure controller 5
12. Oil connection 6
13. Oil pump 8
14. External oil pump (option) 8
15. Front panel 9
16. Air flap positioning motor 9
17. Remote switching 9
18. Air pressure switch 10
19. Gas pressure monitor 10
20. Functional test 10
21. Start-up 11
22. Troubleshooting / process description 15
23. Control unit 19
24. MPA 22 control unit display 19
25. Calculation principle for gas burner adjustment 20
26. Gas train KEV_{II} 1 ½" , KEV 2" and KEV DN65 21
27. Gas train KEV25 1" and KEV30 1½" 22
28. Nozzle selection diagram 23
29. Adjustment tables 24
30. Exploded views / spare parts lists 26
31. Adjustments log 33
32. Declaration of conformity for dual-fuel burner for heating oil and natural gas or liquid gas 34
33. Overall dimensions 36
34. Working ranges 36

E. 30.07.07 • G. 07.06.11

1. General information

Installation of a dual fuel must be performed in accordance with extensive regulations and guidelines. It is therefore the duty of the installer to be familiar with all applicable regulations and requirements. Installation, start-up and maintenance must be performed with utmost care.
The burner must not be operated in rooms with high levels of air humidity (laundry rooms), dust or corrosive vapours. The boiler room must be ventilated accordingly with ventilation air.
Light oil in accordance must be used. The burners are suitable for combustion of natural gas or liquid gas and are in compliance with European standard EN 676 and EN 267.

2. Scope of delivery

Before installing the Nu-Way Series MDFL1510/2705 dual fuel, please check that all the items included in the scope of delivery are present.
Scope of delivery:
burner, mounting kit, separate operating instructions, technical information, separate circuit diagram, flange seal, one 7- pin connector and one 4- pin plug connector (Wieland connector).

Caution !
Oil nozzles are not included in the scope of delivery.

For gas:

Gas train
The gas pipe must be designed to conform to the flow rate and the available gas flow pressure and routed with the lowest pressure loss over the shortest distance to the burner. The loss of gas pressure via the gas train and the burner as well as the resistance on the fuel gas side of the heat generator must be less than the connection flow pressure.

Caution !
Observe sequence and throughflow direction of fittings

3. Maintenance and customer service

The complete system should be checked once a year for correct functioning and leaks in accordance with DIN 4755 by a representative of the manufacturer or other suitably qualified person.
According to EN 267 it is not permissible to perform repairs on components with a safety function. On the other hand, the replacement of parts with genuine parts or approved equivalent parts is permitted.
We accept no liability for consequential damage in cases of incorrect installation or repair, the fitting of non-genuine parts or where the equipment has been used for purposes for which it was not intended.

4. Operating instructions

The operating instructions together with this technical information leaflet must be displayed in a clearly visible position in the boiler room. The address of the nearest customer service centre must be displayed on the back of the operating instructions.

5. Instruction of operating personnel

Faults are often caused by operator error. The operating personnel must be properly instructed in how the burner works. In the event of recurring faults, Customer Service should be notified.

6. Filter/Strainer

According EN 676 a filter/strainer shall be fitted at the inlet of the safety shut-off valve to prevent the ingress of foreign elements.

E. 30.07.07 • G. 07.06.11

7. Key for code designation

MDFL1510

Burner output max.

Series

8. Technical specifications

	Burner type			
Technical specifications	**MDFL1510**	**MDFL1880**	**MDFL2505**	**MDFL2705**
Burner output in kW (in gas-fired operation)	441 - 1510	738 - 1880	620 - 2505	887 - 2705
Burner output (in oil-fired operation) in kg/h (in kW)	46.2 - 127.3 (548 - 1510)	62.2 - 158.5 (738 - 1880)	64.0 - 211.2 (759 - 2505)	74.8 - 228.0 (887 - 2705)
Fuel	Light oil, natural gas LL + E, liquid gas			
Mode of operation	Optionally oil/gas two-stage or gas modulating, oil two-stage			
Voltage	3 / N / PE ~ 50 Hz / 400 V			
Power consumption at start / during operation *	10.5 / 6.5	15.0 / 9.0	15.5 / 9.3	16.3 / 11.3
Electric motor power (at 2800 rpm) in kW	3.0	4.0	4.4	5.5
Flame failure controller	KLC1000			
Control box	MPA 22			

* The power consumption of the version with external oil pump is 2.7 A higher.

9. Boiler connection dimensions (All dimensions are given in mm)

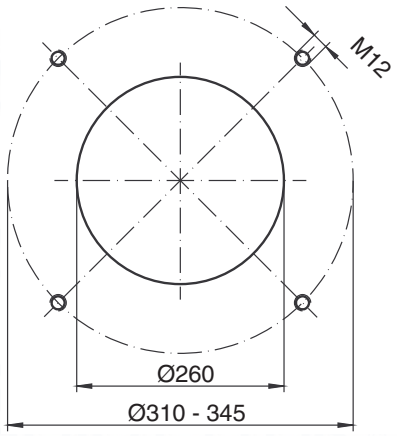

E. 30.07.07 • G. 07.06.11

10. Ignition electrode

The following clearances between the nozzle and ignition electrode should be observed:

The given dimensions are intended for checking purposes after making necessary corrective adjustments or replacing an electrode.

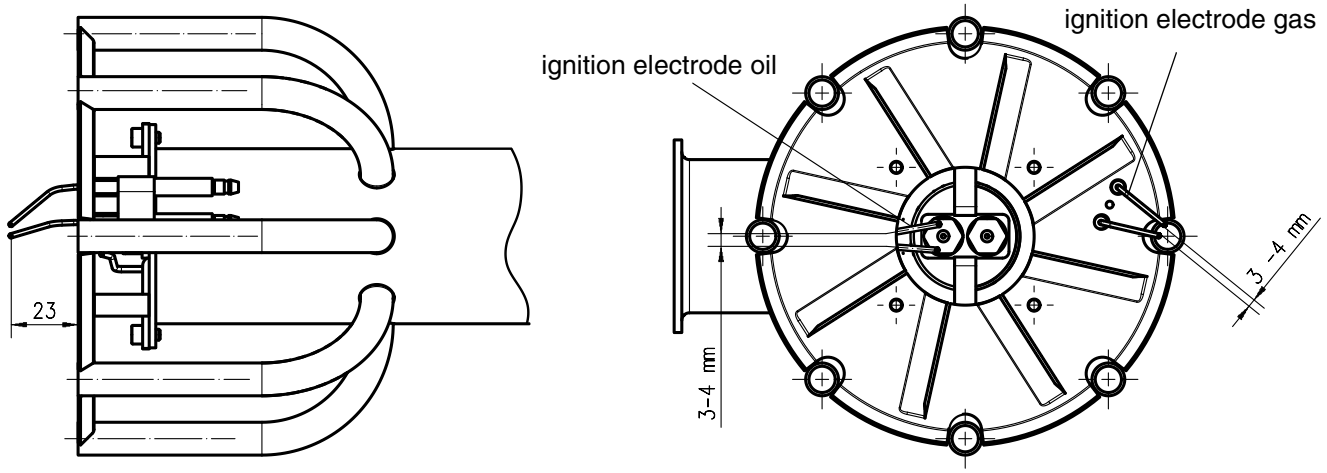

11. Flame failure controller

Operating Indicator LED:

LED is OFF: KLC is not switched on – no power supply or 'no flame' is detected.
LED is FLASHING: KLC has detected a flame; the quality of the flame signal is indicated by the intensity of the flashing of the LED – fast flashing indicates a healthy flame signal and vice versa - slow flashing indicates a weak flame signal.
LED is ON: KLC has detected the strongest level of flame signal.

Commissioning and maintenance

The installation and commissioning must be done by qualified personnel only. Before energising the KLC flame detector please check the cable and wiring connections are in accordance to the diagram and instructions given above. For good maintenance which will ensure trouble free operation of the KLC flame detector; please keep the sight glass clean by wiping with a soft dry clean cloth. Warning: Do not use any kind of cleaning sprays or fluids. During commissioning and after any cleaning maintenance, the flame detector should be checked, as the UV tube is subject to a natural ageing process and towards the end of its life span it is prone to malfunction.
To check that the flame detector is sound we recommend the following procedures be followed:

- Start the burner with the fuel supply closed-off or remove the flame detector from its mounting flange and cover the UV tube using a soft cloth to avoid touching the glass lens. The control box will lock-out at the end of the safety time due to absence of a flame signal.
- Remove the flame detector from its mounting flange. Start the burner while exposing the flame detector to an external UV radiation source such as a cigarette lighter flame, or a small gas flame (n.b. electric room lighting or a torch is inadequate). The burner Control Box must go to lock-out due to detecting an extraneous light source either immediately or at the end of the air pre-purge cycle, depending on the type/model of the Control Box.
- Close off the fuel supply or remove flame detector from its mounting flange and cover the UV tube using a soft cloth when the burner is in the "run" position. The control box must go immediately to lock-out resulting in the burner shutting down.

If any of these safety checks do not function as described i.e. they should always result in burner shutdown and control box lock-out; then it is essential to replace the flame detector with a new KLC flame detector. For safety and trouble free burner operation, we recommend that the flame detector should be replaced after every 10,000 hours of burner operation or approximately every 30months for a burner operating on an average of 10 hours per day.

12. Oil connection

Oil lines must be routed to the burner as far as necessary to allow the oil hoses to be connected without tension. Care must be taken to ensure that the burner can easily be moved into the service position.

Important: an oil filter must be installed before the oil pump.

The tables for single and double line installation show the maximum possible pipe length in dependence on three factors relating to heating oil type EL 4.8 cST.

- Height differential between pump and tank,
- nozzle delivery rate or pump type,
- pipe diameter.

4 brackets, 1 valve and 1 check valve for resistance were factored into the suction line length. Due to possible degassing of the oil, dimension "X" should not exceed a length of 4 m.

Double line system

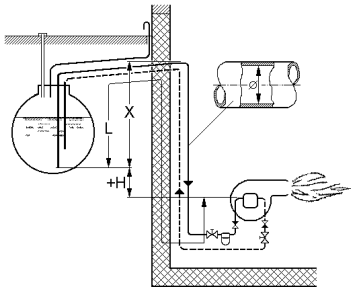

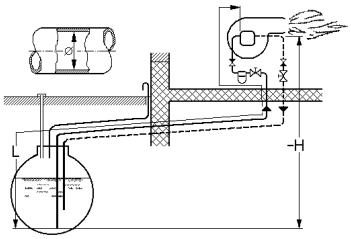

H (m)	Suntec AJ6 L (m)				Suntec J7 L (m)				
∅ mm	10	12	14	16	10	12	14	16	20
4.0	13	28	54	93	7	17	34	60	-
3.0	11	25	47	82	6	15	29	52	-
2.0	9	21	40	70	5	12	25	45	-
1.0	8	17	34	59	3	10	21	37	-
0.5	7	16	30	53	3	9	19	34	-
0	6	14	27	48	2	8	16	30	77
-0.5	5	12	24	42	-	6	14	26	67
-1.0	4	10	20	36	-	5	12	22	58
-2.0	2	7	14	25	-	3	8	15	40
-3.0	0	3	7	13	-	-	3	7	22
-4.0	-	-	-	-	-	-	-	-	4

E. 30.07.07 • G. 07.06.11

Single-pipe system

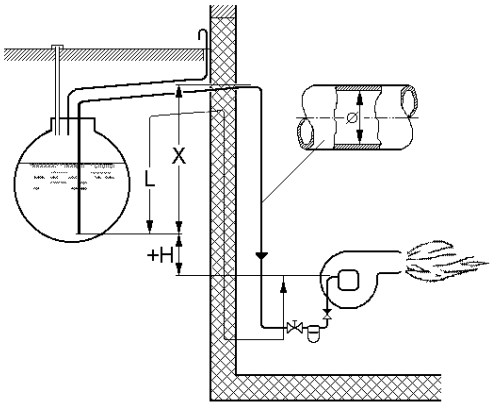

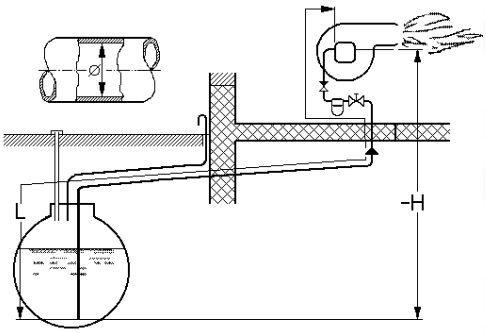

Nozzle	14 (gph)			20 (gph)				30 (gph)				45 (gph)			
.Ø mm	8	10	12	8	10	12	14	10	12	14	16	10	12	14	16
H (m)	L (m)	L (m)	L (m)	L (m)	L (m)	L (m)	L (m)	L (m)	L (m)	L (m)	L (m)	L (m)	L (m)	L (m)	L (m)
4.0	21	52	100	14	36	75	100	23	49	92	-	15	32	61	100
3.0	18	45	95	12	31	66	100	20	43	81	-	13	28	53	92
2.0	16	39	82	11	27	57	100	17	37	70	-	11	24	46	79
1.0	13	33	69	9	23	48	89	15	31	59	-	9	20	38	66
0.5	12	30	62	8	20	43	81	13	28	53	-	8	18	35	60
0	11	27	56	7	18	39	72	12	25	48	82	7	16	31	54
-0.5	9	23	49	6	16	34	64	10	22	42	72	-	14	27	47
-1.0	8	20	43	5	14	30	55	9	19	36	63	-	12	23	41
-2.0	5	14	30	3	10	21	39	6	13	25	44	-	8	16	28
-3.0	3	8	17	-	5	11	22	3	7	14	25	-	4	8	15
-4.0	-	-	4	-	-	-	5	-	-	-	5	-	-	-	-

E. 30.07.07 • G. 07.06.11

13. Oil pump

Oil lines must be routed to the burner as far as necessary to allow the oil hoses to be connected without tension. Care must be taken to ensure that the burner can easily be moved into the service position.

Important: an oil filter must be installed before the oil pump.

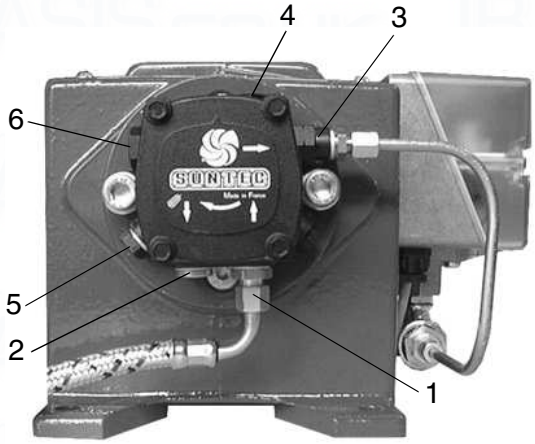

Suntec oil pump for MDFL1510 / MDFL1880

1 Supply
2 Return
3 Nozzle connection
4 Pressure gauging connection
5 Vacuum gauging connection
6 Pressure setting

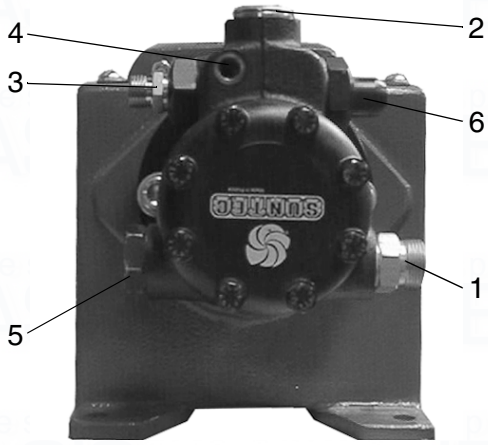

Suntec oil pump for MDFL2505 / MDFL2705

1 Supply
2 Return
3 Nozzle connection
4 Pressure gauging connection
5 Vacuum gauging connection
6 Pressure setting

To convert the pump for operation on a single line system, the following points must be observed: remove the return line and the connection nipple. Unscrew the bypass plug in the return line port and tightly seal the port with a sealing plug. The pump suction flow will then be identical to the flow rate through the nozzle.

14. External oil pump (option)

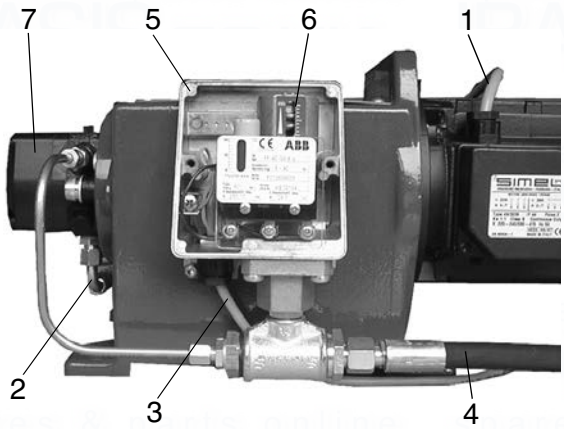

1 Three-phase a.c. motor connecting cable
2 Oil pump power cord
3 Oil pressure switch connecting cable
4 Pressure line to burner
5 Oil pressure switch
6 Oil pressure setting screw
7 Oil pump

The external oil pump is supplied for burners which primarily operate in gas burning mode.
In oil burning mode, the pump starts when a heating request is issued. Oil pressure switch (5) is fitted for pressure monitoring. In the event of loss of oil pressure, the burner shuts off automatically. The oil pressure switch is pre-set at the factory. Pressure can be adjusted using the setting screw (6).

E. 30.07.07 • G. 07.06.11

15. Front panel

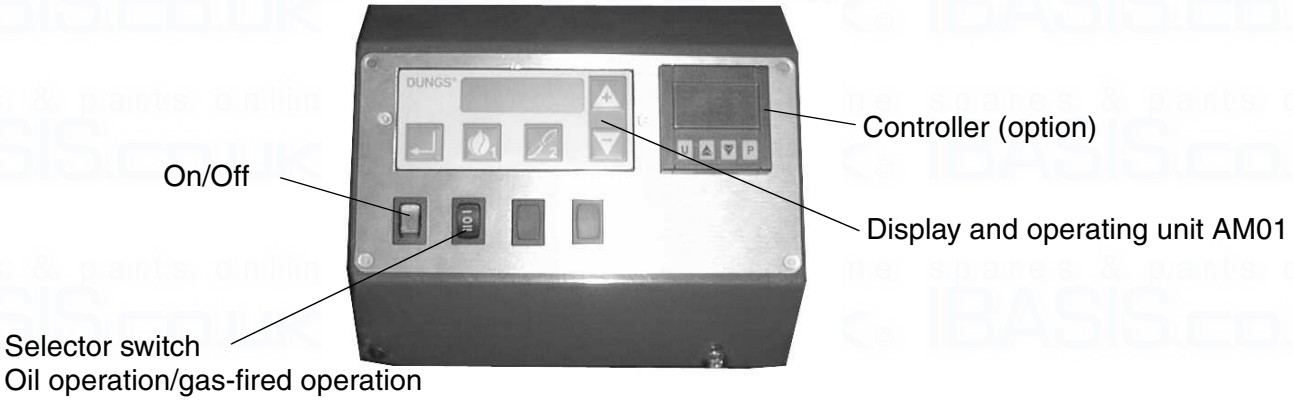

16. Air flap positioning motor

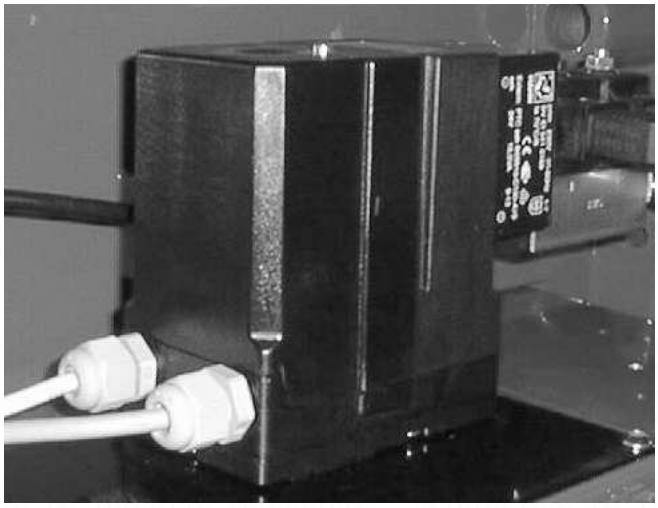

The air flap positioning motor is designed for air flap adjustment on progressive two-stage burners or modulating burners. The motor is activated electronically via the microprocessor-controlled control box.

17. Remote switching

Note

If the selector switch under the burner hood is in the **"Remote"** position, it is not possible to change over between oil and gas operation with the selector switch on the front panel.

It is only possible to change over between oil and gas operation if the selector switch under the burner hood is in the **"Manual"** position.

18. Air pressure switch

The air pressure switch is a differential pressure switch and monitors pressure at the forced-air burner.

The air pressure switch is preset at the factory to 8 mbar.

19. Gas pressure monitor

The gas pressure monitor serves to monitor the gas inlet pressure. The burner is shut down if the gas inlet pressure drops below the set minimum value (preset at factory). The burner starts up automatically again when the minimum pressure is exceeded.

20. Function test

The flame monitor must undergo a safety test both at initial start-up and after modifications or if the system has been out of use for a lengthy period of time.

Start-up test with blacked-out flame sensor:
The burner must go into lockout mode after expiry of the safety interval.

Start-up with exposed flame sensor:
The burner must go into lockout mode after approx. 20 s of pre-ventilation.

Normal start-up; if the burner is in operation, black out the flame sensor:
repeat start-up test, the burner must go into lockout mode after expiry of the safety interval.

E. 30.07.07 • G. 07.06.11

21. Commissioning: Adjustment mode - oil-fired operation

OFF

To enter this adjustment mode, the burner must be on standby.
Standby means that the burner is connected to the power supply, but no heating request has been issued and the burner is switched to oil-fired operation. If **OFF** appears on the display on MPA 22, the unit is running in standby mode and has already been configured.

OFFUPr

If **OFFUPr** appears on the display, the MPA 22 is also running in standby mode, but the unit is still unprogrammed and all setting parameters still have to be entered by the following procedure.

Important: If the setting operation is interrupted within 30 min. or not completed correctly, **OFFUPr** will also be displayed.

To change new setting parameters or old setting parameters, follow these steps:

Step 1:
Enter the safety code. Press key 1 and key 2 simultaneously

Step 2:
7 horizontal bars are now displayed. Enter the password as follows.
Note: The intervals between the individual inputs must not be longer than 20 sec., as the MPA 22 will otherwise revert to standby mode. If this is the case, you will have to start the code entry procedure from the beginning again.

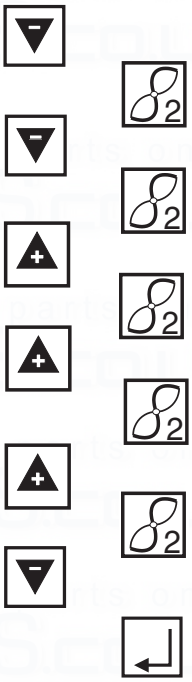

- Press the minus key twice.
- Confirm your entry by pressing key 2 once.
- Press the minus key once.
- Confirm your entry by pressing key 2 twice.
- Press the plus key 4 x.
- Confirm your entry by pressing key 2 once.
- Press the plus key twice.
- Confirm your entry by pressing key 2 once.
- Press the plus key 3 x.
- Confirm your entry by pressing key 2 once.
- Press the minus key 4x.
- Press the enter key once.
  Password entry is now finished.

P E OIL

Step 3:
after the correct password has been entered, **EOIL** appears on the display.

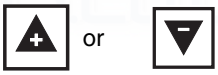

Step 4:
the operating points 9OIL (stage 3), **3OIL (stage 2)** and **1OIL (stage 1)** can now be selected by pressing the **plus or minus key**.

P 9 OIL L/A

Step 5:
After Stage 3 has been selected, **9OIL** appears on the display. The Stage 3 operating point can be adjusted to values between 0° and 90° by holding down **key 2** and optionally pressing the **plus or minus key**.
Note: The setting value of Stage 3 should be set to a value 0.1° greater than the value of Stage 2!

E. 30.07.07 • G. 07.06.11

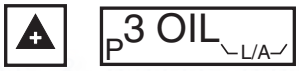

Step 6:
After you have set **Stage 3**, press the **plus key** to set **Stage 2** . **3OIL** appears on the display.

The Stage 2 operating point can be adjusted to values between 0° and 90° by holding down **key 2** and optionally pressing the **plus or minus key**.
For basic setting values, please refer to the adjustment table.

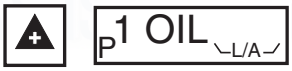

Step 7:
After you have set **Stage 2**, press the **plus key** to set **Stage 1**. **1OIL.** appears on the display.

The **Stage 1** operating point can be adjusted to values between 0° and 90° by holding down **key 2** and optionally pressing the **plus or minus key**.
For basic setting values, please refer to the adjustment table.

Step 8:
After you have set **Stage 1** , press the **plus key** to set the ignition point **P0**. **0OIL.** appears on the display.

The ignition point **P0** can be adjusted to values between 0° and 90° by holding down **key 2** and optionally pressing the **plus or minus key**.

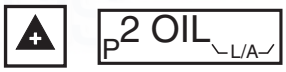

Step 9:
After you have set the ignition point **P0** , press the **plus key** to set the Stage 1 / 2 switch-over point. **2OIL.** appears on the display.

The Stage 1 / 2 switch-over point can be adjusted to values between 0° and 90° by holding down **key 2** and optionally pressing the **plus or minus key**.

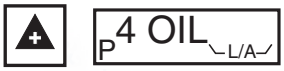

Step 10:
After the Stage 1 / 2 switch-over point has been set, press the **plus key**. **4OIL** of the Stage3 / 3 switch-over point appears on the display. The setting value should be at **Stage 3**. Press the **plus key** again. **OIL.**
Appears on the display.Close the safety loop. The burner should now start up and dwell in the ignition position. If this is not the case, please repeat the procedure for adjustment of the ignition point under Step 8.

Step 11:
The setting values are now adjusted in relation to the boiler and the required burner output. The burner is in operation throughout the adjustment procedure so that all boilers and measured data relevant to the burner can be recorded.

Adjust the operating points in the order Stage 1, Stage 2, Stage 3 (0.1° greater than Stage 2), Stage 1 /2 switch-over point, Stage 3 / 4 switch-over point (0.1° greater than Stage 2) and make adjustments by simultaneously pressing **key 2** and the **plus or minus key**. To switch the burner to normal operation, press **key 1** and **key 2** simultaneously for approximately 2 sec. The burner switches to Stage 1 and then returns to normal operation. The setting procedure is now completed and the values have been stored.

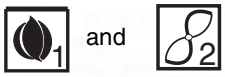

Note:
If you want to change values after finishing the setting procedure, you will have to start from the beginning again, i.e. **OFF**.

Note: faults are cleared by pressing the enter key.

E. 30.07.07 • G. 07.06.11

Adjustment mode - gas-fired operation

OFF

To enter this adjustment mode, the burner must be on standby.
Standby means that the burner is connected to the power supply, but no heating request has been issued and the burner is switched to gas-fired operation.
If **OFF** appears on the display on MPA 22,
the unit is running in standby mode and has already been configured.

OFFUPr

If **OFFUPr** appears on the display, the MPA 22 is also running in standby mode, but the unit is still unprogrammed and all setting parameters still have to be entered by the following procedure.

Important: If the setting operation is interrupted within 30 min. or not completed correctly, **OFFUPr** will also be displayed.

To change new setting parameters or old setting parameters, follow these steps:

Step 1:
Enter the safety code. Press **key 1** and **key 2** simultaneously

Step 2:
7 horizontal bars are now displayed. Enter the password as follows.
Note: The intervals between the individual inputs must not be longer than 20 sec., as the MPA 22 will otherwise revert to standby mode. If this is the case, you will have to start the code entry procedure from the beginning again.

- Press the minus key twice.
- Confirm your entry by pressing key 2 once.
- Press the minus key once.
- Confirm your entry by pressing key 2 twice.
- Press the plus key 4 x.
- Confirm your entry by pressing key 2 once.
- Press the plus key twice.
- Confirm your entry by pressing key 2 once.
- Press the plus key 3 x.
- Confirm your entry by pressing key 2 once.
- Press the minus key 4x.
- Press the enter key once.
  Password entry is now finished.

Step 3:
after the correct password has been entered, **EGAS Pn** appears on the display.

Step 4:
the operating points P9 (max load), **P1 (min load)** and **P0 (starting point)** can now be selected by pressing the **plus or minus key**.

Step 5:
After the operating point **P9** has been selected, **9GAS** appears on the display.
The max load operating point can be adjusted to values between 0° and 90° by holding down **key 2** and optionally pressing the **plus or minus key**.
For basic setting values, please refer to the adjustment table.

Step 6:

After you have set **P9**, press the **plus key** to set **P1**. **1 Gas** appears on the display.

The min load operating point can now be set to a value between 0° and 90° by holding down **key 2** and optionally pressing the **plus or minus key**.

For basic setting values, please refer to the adjustment table.

Step 7:

After you have set **P1**, press the **plus key** to set **P0** (the starting point). **0 Gas** appears on the display.

The operating point (starting point) can now be set to a value between 0° and 90° by holding down **key 2** and optionally pressing the **plus or minus key**. The value of **P1** should preferably be set. If **P1**, (min. load) is set to a very low value, it is recommended to set **P0** to a higher value than **P1** in order to ensure stable starting.

For basic setting values, please refer to the adjustment table.

Step 8:

After you have set **P0**, press the **plus key.**

GAS Pn. appears on the display.

Now close the safety loop and issue a heating request.

The burner should now start up and dwell in the ignition position. If this is not the case, please repeat the procedure for adjustment of ignition point **P0** under **Step 7**. After the burner has started up, the gas train must be set to the nozzle pressure specified in the adjustment table.

Step 9:

The setting values are now adjusted in relation to the boiler and the required burner output. The burner is in operation throughout the adjustment procedure so that all boilers and measured data relevant to the burner can be recorded.

Adjust the operating points in the order **P0**,**P1** and **P9** and make adjustments by simultaneously pressing **key 2** and the **plus or minus key**. To switch the burner to normal operation, press **key 1** and **key 2** simultaneously for approximately 2 sec. The burner switches to min output **P1** and then returns to normal operation.

The setting procedure is now completed.

Note:

If you want to change values after finishing the setting procedure, you will have to start from the beginning again.

spares & parts online IBASIS.COUK

22. Troubleshooting / process description

Defect determined:	Cause:	Remedy:	Fault code
Burner motor does not start up	Electric supply lead faulty	Rectify faults in electrical installation	
	Fuse faulty	Replace	
	Safety thermostat locked	Unlock	42 h
	Temperature of controller setting is exceeded	Renewed start attempt after temperature drop	
	MPA 22 faulty	Replace	04 h
	Leak	Rectify leak	44H / 43H
	No gas	Safeguard gas supply	
	Gas pressure monitor faulty	Replace gas train	22 h
	Filter in gas train dirty	Clean or replace	
	Air pressure switch not in idle position	Check air pressure switch (see page 10)	20 h
	Burner motor faulty	Replace	
	No load at terminal 5	Check plug connection and current path of solenoid valve	
	Mains voltage < 187 V	Rectify faults in electrical installation	
Burner starts up and switches to fault mode before or after expiry of safety period	Air pressure switch does not switch through during pre-ventilation	See Page 10	21 h
	Ignition influencing of ionization monitor	See Page 11	26 h
	Gas solenoid valve does not open	Replace gas train	
	Starting gas quantity set too low	Increase starting gas quantity	
	No ignition	Check ignition electrode and setting, ignition transformer and cable	
	Phase and zero mixed up	Connect connector unit in correct phase sequence	
	Flame control faulty	Check according to Page 11	2BH
	Air pressure switch opens during operation	See Page 10	21 h
	Gas nozzle dirty or faulty	Replace gas nozzle	
Flame extinguishes during operation	No gas	Safeguard gas supply	
	Filter in gas train dirty	Clean or replace	
	Flame blow-off	Incorrect burner setting	27 h
	Air pressure switch contact opens	Check/replace air pressure switch	21 h
	Flame signal too weak	Measure flame signal, check ionisation electrode	27 h

Service mode - pneumatic gas-fired operation

The service mode serves to display the set parameters and to read out the fault memory. It can be invoked in any operating state of the burner.
Important:
setting values cannot be changed in service mode. If no key is pressed for longer than 20 sec., the display returns to standby mode.

To access the service mode, press the **enter key** for approx. 2 sec.
The following now appear on the display: point **P0** and the air flap positioning motor setting value at ignition in angular degrees, plus a wrench symbol denoting the service mode.

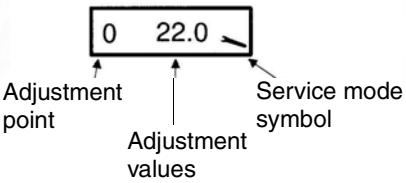

The following points can be retrieved by repeatedly pressing the enter key:

- The characteristic curves for points **P0**, **P1** and **P9**
- The last 6 fault messages **P10** to **P15** (see fault code MPA)
- The testing times of the valve proving system **P16** and **P17**
- The flame quality **P18**
- The eBus address of the MPA **P19**
- The switch setting of the valve proving system **P21**
- The eBus address of the external controller **P24**
- The modulation delay
- The set start points **P26**

To exit the service mode, please press the enter key or wait approx. 20 sec.

Information mode

The information mode is intended for display of consumption figures, operating hours and software data.

To access information mode, press the **Enter key** for approx. 0.5 sec.
A **zero** and a **value** appear on the display.

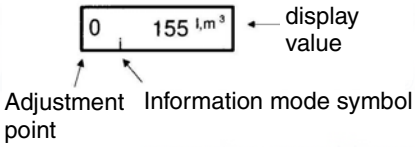

The following values can be queried in information mode under setting points 0 to 8. Retrieve by repeatedly pressing the enter key:

Important:
If no key is pressed for longer than 20 sec., the display returns to normal operating mode.

0 = fuel consumption
1 = total operating hours
2 = for oil only
3 = for oil
only 4 = number of successful start-ups
5 = display of software version
6 = software creation date
7 = hardware number
8 = date of production

E. 30.07.07 • G. 07.06.11

Troubleshooting the MPA

Code	Description
04 h	Internal hardware fault
05 h	Internal hardware fault
06 h	Internal hardware fault
07 h	Internal hardware fault
09 h	Internal hardware fault
10 h	Internal hardware fault
11 h	Internal hardware fault
12 h	Internal hardware fault
13 h	Internal hardware fault
14 h	Internal hardware fault
15 h	Internal hardware fault
20 h	Air pressure switch is not in idle position
21 h	Failure of air pressure switch
22 h	Failure of gas pressure monitor
25 h	No flame after safety period
26 h	Outside light
27 h	Flame failure during operation
29 h	Internal hardware fault
2AH	Internal hardware fault
2BH	Short-circuit in photo resistor or internal fault
2CH	Internal hardware fault
30 h	Internal hardware fault
31 h	Internal hardware fault
32 h	Internal hardware fault
33 h	Internal hardware fault
34 h	Internal hardware fault
42 h	Safety chain interrupted
43 h	Y3 found to be leaking during leak check
44 h	Y3 found to be leaking during leak check
45 h	Internal hardware fault
46 h	Internal hardware fault
47 h	Internal hardware fault
48 h	Internal hardware fault
4AH	Internal hardware fault
5BH	Internal hardware fault
4CH	Internal hardware fault
4DH	Internal hardware fault
4EH	Internal hardware fault
50 h	Internal hardware fault
51 h	Internal hardware fault
52 h	Internal hardware fault
53 h	Internal hardware fault
54 h	Internal hardware fault
55 h	Internal hardware fault
56 h	Internal hardware fault
57 h	Internal hardware fault
58 h	Internal hardware fault
59 h	Internal hardware fault

Code	Description
5AH	Internal hardware fault
5CH	Internal hardware fault
5DH	Internal hardware fault
5EH	Internal hardware fault
63 h	Internal hardware fault
64 h	Internal hardware fault
65 h	Internal hardware fault
67 h	Internal hardware fault
68 h	Incorrect feedback from air flap positioning drive (check connector and cable, actuator drive mounting and air flap mechanism)
6AH	Air-flap actuator position is out of tolerance (check connector and cable, actuator drive mounting and air flap mechanism)
6CH	Internal hardware fault
6DH	Internal hardware fault
6EH	Actuator drive interchanged or incorrectly connected
6FH	Burner detection error
70 h	Internal hardware fault
71 h	Internal hardware fault
73 h	Internal hardware fault
74 h	Internal hardware fault
75 h	Internal hardware fault
76 h	Internal hardware fault
77 h	Internal hardware fault
78 h	Internal hardware fault
79 h	Internal hardware fault

Process description

Start-up tests	Processor and program memory test / move actuator drives to reference position
State 01	Start-up decision (heating request present)
State 02	Blower idle state check
State 03	Blower start-up
State 04	Preventilation / operation of gas flap actuator over speed range
State 05	Preventilation / activate and test watchdog
State 06	Preventilation / move gas flap actuator to ignition position
State 07	Move air flap actuator to ignition position
State 08	Pre-ignition depending on parameters
State 09	Start-up safety period
State 10	Stabilisation period
State 11	Move positioning drive from ignition point to operating characteristic
State 12	Operation
State 13	VPS - evacuate valve cavity / (post-ventilate)
State 14	Test duration Y2 / (remaining post-ventilation time)
State 15	VPS - fill valve cavity / (remaining post-ventilation time)
State 16	Test duration Y3 / (remaining post-ventilation time)
State 17	Remaining post-ventilation time
State 18	Restart disable time / waiting loop for low gas program
State 20	Standby position

E. 30.07.07 • G. 07.06.11

23. Control unit MPA 22

The MPA 22 is a microprocessor-controlled intermittent-duty control box for controlling and monitoring pneumatic modulating forced-air burners with an actuator drive. For operation as an automatic gas burner control with integral valve proving system.
The MPA 22 has e-BUS connectivity.

Gas certification
EU type test approval according to EU Gas Appliance Directive.
MPA 22 CE-0085AU316

24. MPA 22 control unit display

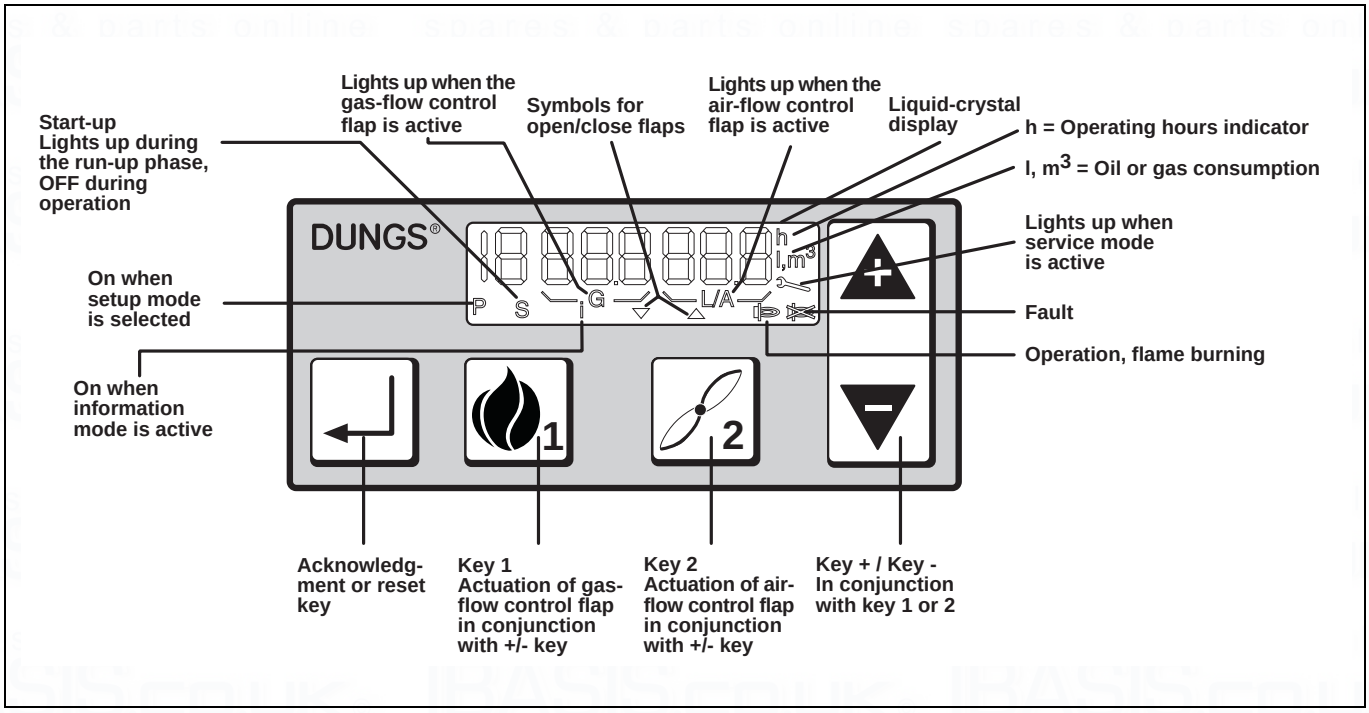

25. Calculation principles for gas burner adjustment

The values given in the tables are setting values for start-up.
The necessary system adjustment must be newly determined in each case.

General:
the calorific value ($H_{i,n}$) of fuel gases is generally specified for the normal state (0°C, 1013 mbar).

Natural gas type E	$H_{i,n}$ = 10.4 kWh/m^3
Natural gas type LL	$H_{i,n}$ = 9.3 kWh/m^3
LPG gas (propane)	$H_{i,n}$= 25.89 kWh/m^3

Gas counters measure the volume of gas in the operational state.

Gas flow determination:
To allow the heat generator load to be adjusted correctly, the gas flow rate must be determined in advance.

Example:

Altitude above sea level	230 m
Barometric air pressure B (acc. to table)	989 mbar
Gas pressure P_G at meter	20 mbar
Gas temperature J_G	16°C
Boiler output Q_n	430 kW
Efficiency h_K (assumed)	90%
Calorific value $H_{i,n}$	10.4 kWh/m^3

Gas flow in standard state (V_n)

$$V_n = \frac{Q_n}{\eta_k \times H_{i,n}} = \frac{430kW}{0,90 \times 10,4 \frac{kWh}{m^3}} = 46 \frac{m^3}{h}$$

Gas flow in operating state (V_B)

$$V_B = \frac{V_n}{f} = \frac{46 \frac{m^3}{h}}{0,94} = 49 \frac{m^3}{h}$$

Conversion factor (f)

$$f = \frac{B + P_G}{1013} \times \frac{273}{273 + \vartheta_G}$$

Annual average air pressure

Average geodetic altitude of the supply region above sea level [m]	from		1	51	101	151	201	251	301	351	401	451	501	551	601	651	701
	to	0	50	100	150	200	250	300	350	400	450	500	550	600	650	700	750
Annual average of air pressure	(mbar)	1016	1013	1007	1001	995	989	983	977	971	965	959	953	947	942	936	930

Legend:
Q_n = boiler output [kW]
h_K = efficiency [%]
$H_{i,n}$ = lower standard calorific value [kWh/m^3]
f = conversion factor
B = barometric air pressure [mbar]
p_G = gas pressure at gas meter [mbar]
J_G = gas temperature at gas meter [°C]

E. 30.07.07 • G. 07.06.11

26. Gas train KEV II1 ½" , KEV 2" and KEV DN65

Installing the gas train	
Installation position	only in horizontal line, not tilted.
Minimum distance to walling:	20 mm
Screw the measuring nipple for combustion chamber pressure into the gas jacket at the top. Route the connecting hose between the measuring nipple for combustion chamber pressure and the gas train in a loose loop.	

The air pressure connection nipple must be screwed into the gas jacket at the top.

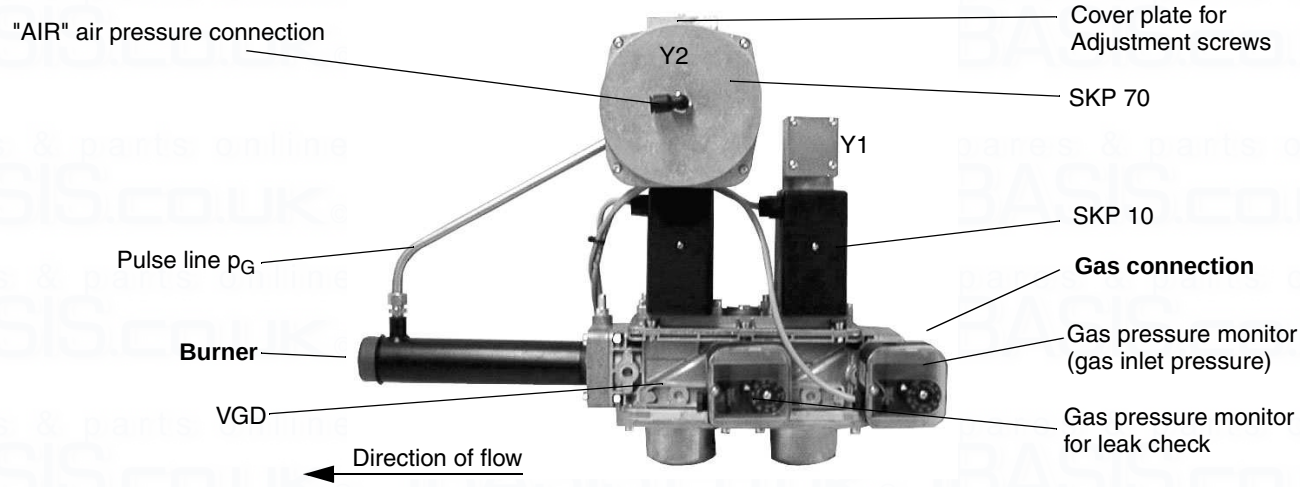

Connect the blue hose to the "AIR" connection on the gas train and the air pressure connection on the gas jacket. The blue hose serves as a control line for the gas train and must be routed in a loose loop without kinking.

Remove the plate for covering the adjustment screws from the gas pressure regulator.

Start the burner.

1. Setting the air surplus in high and low-load operation

- Set the air flap positions P9 for high-load operation and P1 for low-load operation according to 27. Adjustment tables. Follow the setting procedure described in 19. Adjustment mode for pneumatic gas-fired operation with MPA 22 display.
- In high-load operation, set the air surplus with the "large flame" adjustment screw on the gas pressure regulator. The CO_2 level in the flue gas should be 9-10% for natural gas.
- In high-load operation, set the air surplus with the "small flame" adjustment screw on the gas pressure regulator. The CO_2 level in the flue gas should be 9-10% for natural gas. The low-load setting influences the high-load setting.
- In high-load operation, check the air surplus and, if necessary, correct the setting with the "large flame" adjustment screw on the gas pressure regulator.

2. Setting the output in high and low-load operation

- Check the high-load setting via the gas flow at the gas meter or compare the nozzle pressure with the values stated in 27. Adjustment tables. The output can be increased by opening the air flap (to increase P9) and reduced by closing the air flap (to reduce P9). The air surplus is not affected by this adjustment.
- Check the low-load setting via the gas flow at the gas meter or compare the nozzle pressure with the values stated in 27. Adjustment tables. The output can be increased by opening the air flap (increase P1) and reduced by closing the air flap (reduce P1). The air surplus is not affected by this adjustment.

27. Gas train KEV25 1" and KEV30 1½"

Installing the gas train	
Installation position	only in horizontal line, not tilted.
Minimum distance to walling:	20 mm
Screw the air pressure measuring nipple into the gas jacket at the top. Route the connecting hose between the air pressure measuring nipple and the gas train in a loose loop.	

The air pressure connection nipple must be screwed into the gas jacket at the top.

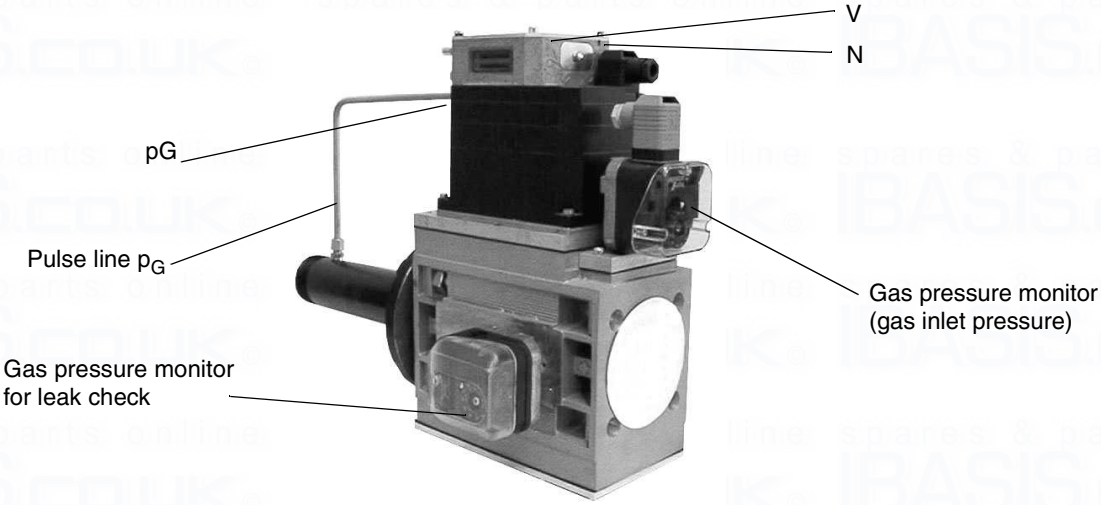

The blue hose serves as a control line for the gas train and must be routed in a loose loop without kinking. Cut the blue hose into two sections. Connect the first sections of blue hose to the "p_L" connection on the gas train and the air pressure connection on the gas jacket, and connect the other section to the "p_F" measuring point on the combustion chamber. The hose must be routed in such a fashion that any condensate forming inside the combustion chamber flows back, and not into the gas train.

Start the burner.

1. Setting the air surplus in high and low-load operation

- Set the air flap positions P9 for high-load operation and P1 for low-load operation according to 27. Adjustment tables. Follow the setting procedure described in 19. Adjustment mode for pneumatic gas-fired operation with MPA 22 display.
- In high-load operation, set the air surplus at the adjustment screw "V" on the gas pressure regulator. The CO2 level in the flue gas should be 9-10% for natural gas.
- In low-load operation, set the air surplus with the adjustment screw "N" on the gas pressure regulator. The CO2 level in the flue gas should be 9-10% for natural gas. The low-load setting influences the high-load setting.
- In high-load operation, check the air surplus and, if necessary, correct the setting using the adjustment screw "V" on the gas pressure regulator.

2. Setting the output in high and low-load operation

- Check the high-load setting via the gas flow at the gas meter or compare the nozzle pressure with the values stated in 27. Adjustment tables. The output can be increased by opening the air flap (to increase P9) and reduced by closing the air flap (to reduce P9). The air surplus is not affected by this adjustment.
- Check the low-load setting via the gas flow at the gas meter or compare the nozzle pressure with the values stated in 27. Adjustment tables. The output can be increased by opening the air flap (increase P1) and reduced by closing the air flap (reduce P1). The air surplus is not affected by this adjustment.

E. 30.07.07 • G. 07.06.11

28. Nozzle selection diagram

If the desired output deviates from the values specified in the tables, the nozzle size and the pump pressure can be determined on the basis of the following diagram.

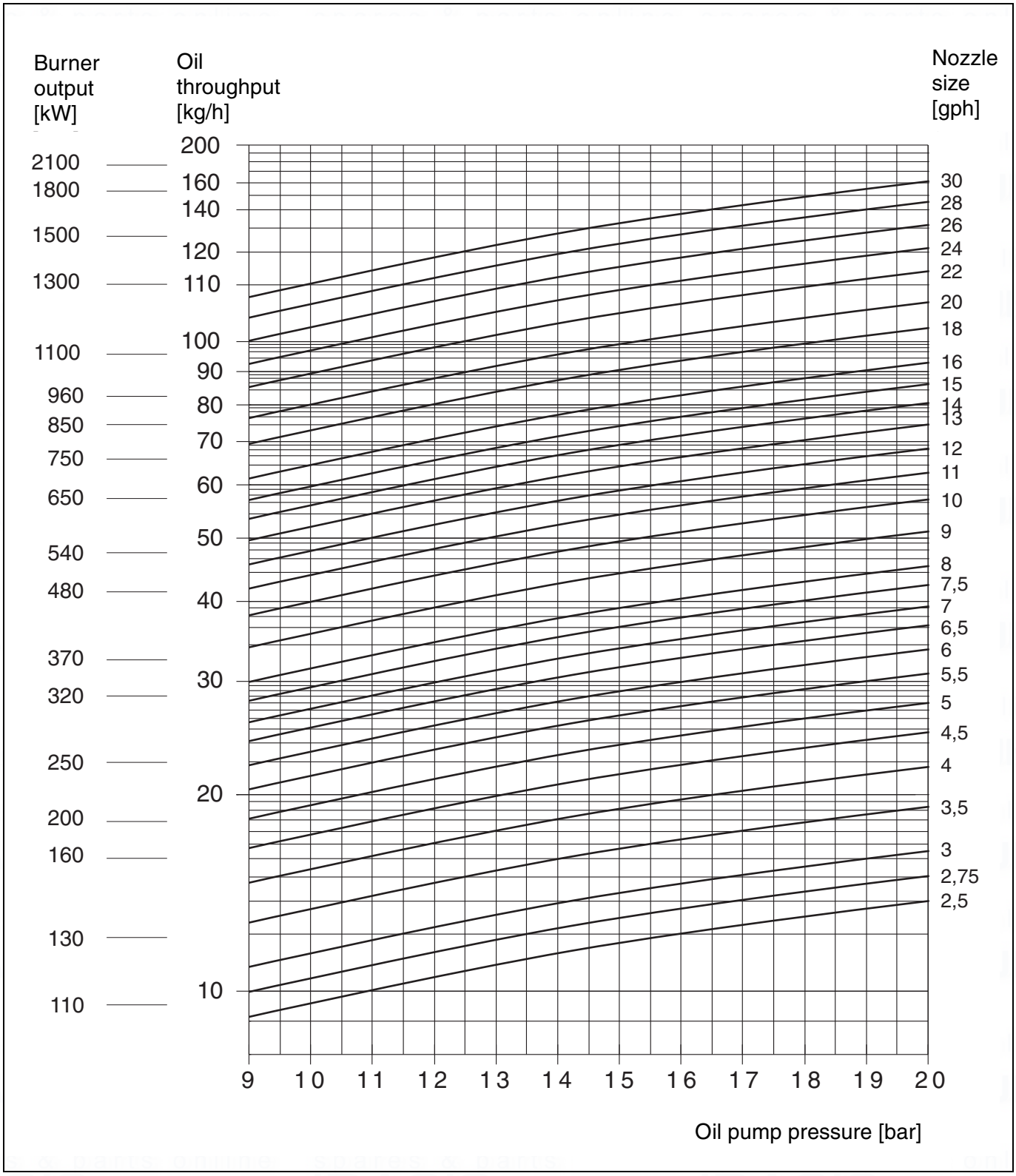

29. Adjustment table

MDFL1510										MDFL1510								MDFL1510			
					Light oil H_i = 11.86 [kWh/kg]					Natural gas L $H_{i,n}$ = 9.3 [kWh/m³]				Natural gas H $H_{i,n}$ = 10.4 [kWh/m³]				LPG $H_{i,n}$ = 25.89 [kWh/m³]			
Burner output [kW]		Boiler output η= 93% [kW]	Air flap position [°]		Pump pressure [bar]	Oil nozzle [USgal/h]		Oil flow rate [kg/h]		Gas nozzle pressure p_G [mbar]		Gas flow rate [m³/h]		Gas nozzle pressure p_G [mbar]		Gas flow rate [m³/h]		Gas nozzle pressure p_G [mbar]		Gas flow rate [m³/h]	
St. 2	St. 1	St. 2	St. 2 P 9	St. 1 P 1		St. 2	St. 1	St. 2	St. 1	St. 2	St. 1	St. 2	St. 1	St. 2	St. 1	St. 2	St. 1	St. 2	St. 1	St. 2	St. 1
1000	550	930	15	10	21	7.0	8.5	84.3	46.4	13.6	4.0	110,9	61.0	10,1	2.4	99,1	54.5	12.1	3.6	39.8	21,9
1100	550	1023	20	11	21	8.5	8.5	92,7	46.4	16.0	4.0	121,9	61.0	12.0	2.4	109.0	54.5	14,6	3.6	43.8	21,9
1200	600	1116	20	11	21	9.0	9.0	101.2	50,6	18.6	4.9	133.0	66.5	14.0	3.2	119.0	59.5	17.4	4.3	47.8	23,9
1300	650	1209	38	12	21	10.0	10.0	109,6	54.8	21.2	5.9	144,1	72,1	16,1	4.0	128,9	64.4	20.4	5.1	51.8	25,9
1400	700	1302	80	13	20	11.0	11.0	118.0	59.0	23,9	7.0	155.2	77,6	18.2	4.8	138.8	69.4	23,6	5.9	55,7	27,9
1500	750	1395	90	14	20	12.0	12.0	126.5	63.2	26.8	8.0	166.3	83,1	20.4	5.6	148,7	74.3	27,1	6.8	59,7	29.9

MDFL1880										MDFL1880								MDFL1880			
					Light oil H_i = 11.86 [kWh/kg]					Natural gas L $H_{i,n}$ = 9.3 [kWh/m³]				Natural gas H $H_{i,n}$ = 10.4 [kWh/m³]				LPG $H_{i,n}$ = 25.89 [kWh/m³]			
Burner output [kW]		Boiler output η= 93% [kW]	Air flap position [°]		Pump pressure [bar]	Oil nozzle [USgal/h]		Oil flow rate [kg/h]		Gas nozzle pressure p_G [mbar]		Gas flow rate [m³/h]		Gas nozzle pressure p_G [mbar]		Gas flow rate [m³/h]		Gas nozzle pressure p_G [mbar]		Gas flow rate [m³/h]	
St. 2	St. 1	St. 2	St. 2 P 9	St. 1 P 1		St. 2	St. 1	St. 2	St. 1	St. 2	St. 1	St. 2	St. 1	St. 2	St. 1	St. 2	St. 1	St. 2	St. 1	St. 2	St. 1
1400	750	1302	35	12	20	10	12	118.0	63.2	26.5	8.5	155.2	83,1	22.3	6.3	138.8	74.3	20.0	5.7	55,7	29.9
1500	750	1395	37	12	20	12	12	126.5	63.2	29.4	8.5	166.3	83,1	24.8	6.3	148,7	74.3	22,9	5.7	59,7	29.9
1600	800	1488	42	13	22	12	12	134,9	67.5	32.3	9.8	177.4	88,7	27.4	7.5	158,6	79.3	26,1	6.5	63,7	31,9
1700	850	1581	50	14	21	13	13	143.3	71,7	35.2	11.2	188.4	94.2	29.9	8.7	168.5	84.3	29.4	7.4	67,7	33.8
1800	900	1674	68	15	20	14	14	151.8	75,9	38,1	12.5	199.5	99.8	32.5	9,9	178.4	89.2	33.0	8.3	71,7	35.8

MDFL2505										MDFL2505								MDFL2505			
					Light oil H_i = 11.86 [kWh/kg]					Natural gas L $H_{i,n}$ = 9.3 [kWh/m^3]				Natural gas H $H_{i,n}$ = 10.4 [kWh/m^3]				LPG $H_{i,n}$ = 25.89 [kWh/m^3]			
Burner output [kW]		Boiler output η= 93% [kW]	Air flap position [°]		Pump pressure [bar]	Oil nozzle [USgal/h]		Oil flow rate [kg/h]		Gas nozzle pressure p_G [mbar]		Gas flow rate [m^3/h]		Gas nozzle pressure p_G [mbar]		Gas flow rate [m^3/h]		Gas nozzle pressure p_G [mbar]		Gas flow rate [m^3/h]	
St. 2	St. 1	St. 2	St. 2 P 9	St. 1 P 1		St. 2	St. 1	St. 2	St. 1	St. 2	St. 1	St. 2	St. 1	St. 2	St. 1	St. 2	St. 1	St. 2	St. 1	St. 2	St. 1
1700	850	1581	32	13	21	13	13	143.3	71,7	18.3	4.2	188.4	94.2	14.8	3.0	168.5	84.3	14.8	3.7	67,7	33.8
1900	950	1767	39	15	20	15	15	160.2	80,1	22.4	5.5	210,6	105.3	18.3	4.2	188.3	94.2	18.5	4.6	75,7	37.8
2100	1050	1953	42	17	21	16	16	177,1	88.5	26,9	7.0	232.8	116.4	22.0	5.4	208.2	104,1	22,6	5.6	83,6	41.8
2300	1150	2139	68	19	20	18	18	193,9	97.0	31,6	8.5	255.0	127.5	25,9	6.7	228.0	114.0	27,1	6.8	91,6	45.8
2500	1250	2325	90	21	21	19	19	210.8	105.4	36,7	10,1	277,1	138,6	30,1	8.0	247.8	123,9	32.0	8.0	99.5	49.8

MDFL2705										MDFL2705								MDFL2705			
					Light oil H_i = 11.86 [kWh/kg]					Natural gas L $H_{i,n}$ = 9.3 [kWh/m^3]				Natural gas H $H_{i,n}$ = 10.4 [kWh/m^3]				LPG $H_{i,n}$ = 25.89 [kWh/m^3]			
Burner output [kW]		Boiler output η= 93% [kW]	Air flap position [°]		Pump pressure [bar]	Oil nozzle [USgal/h]		Oil flow rate [kg/h]		Gas nozzle pressure p_G [mbar]		Gas flow rate [m^3/h]		Gas nozzle pressure p_G [mbar]		Gas flow rate [m^3/h]		Gas nozzle pressure p_G [mbar]		Gas flow rate [m^3/h]	
St. 2	St. 1	St. 2	St. 2 P 9	St. 1 P 1		St. 2	St. 1	St. 2	St. 1	St. 2	St. 1	St. 2	St. 1	St. 2	St. 1	St. 2	St. 1	St. 2	St. 1	St. 2	St. 1
1800	900	1674	30	12	21	14	14	151.8	75,9	20.0	4.0	199.5	99.8	15.9	2.8	178.4	89.2	16.5	4.1	71,7	35.8
2000	1000	1860	33	14	22	15	15	168,6	84.3	24.7	5.4	221,7	110,9	19.8	3.9	198.3	99,1	20.4	5.1	79,6	39.8
2200	1100	2046	41	16	21	17	17	185.5	92,7	29.9	6.8	243,9	121,9	23,9	5.1	218,1	109.0	24.7	6.2	87,6	43.8
2400	1200	2232	50	18	20	19	19	202.4	101.2	35.4	8.4	266.0	133.0	28.4	6.4	237,9	119.0	29.4	7.4	95,6	47.8
2600	1300	2418	80	20	21	20	20	219.2	109,6	41.3	10,1	288.2	144,1	33.3	7.8	257,7	128,9	34.5	8.6	103.5	51.8

30. Exploded views / spare parts lists

Oil pump unit MDFL

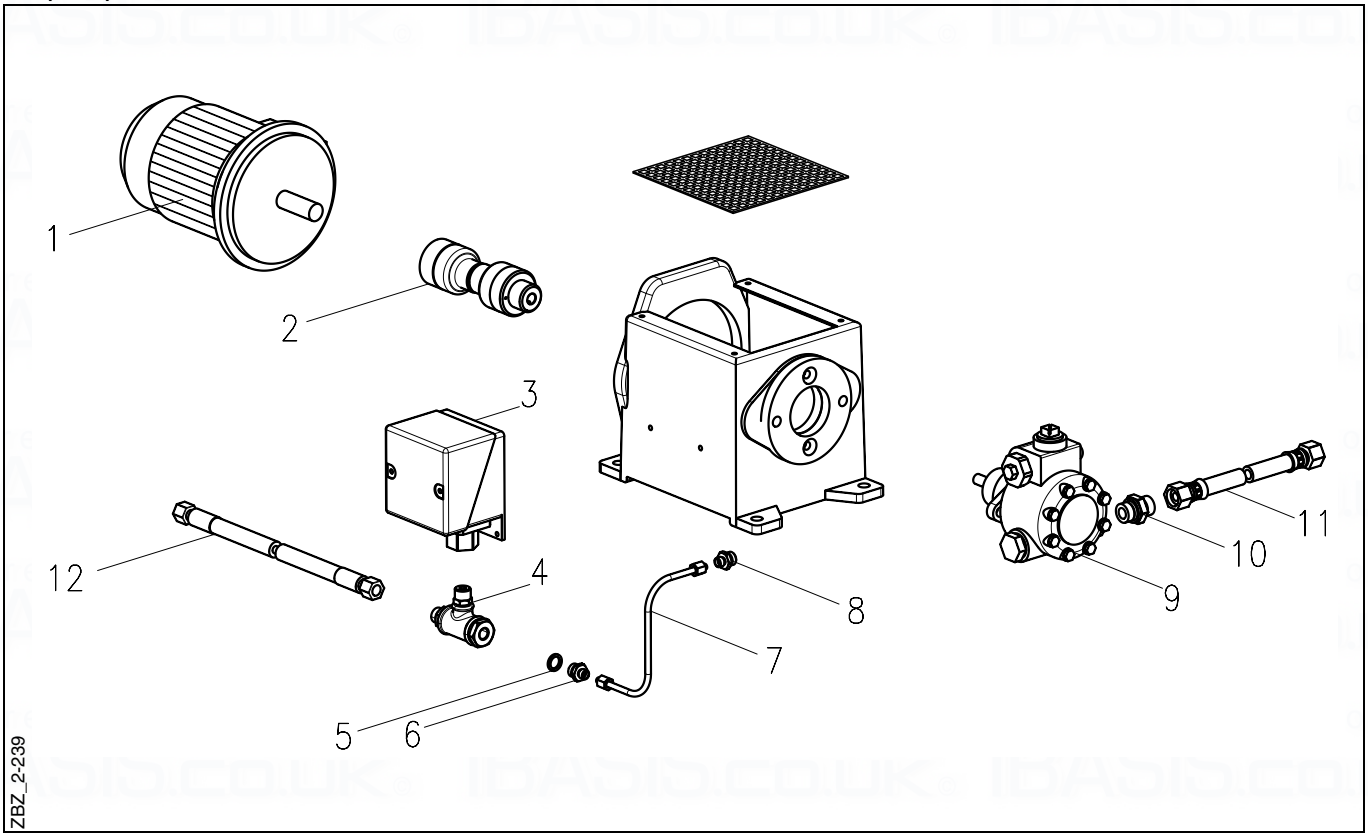

Item	Designation	PU	Art. No.
1	Motor 1.1 kW 50 Hz	1	36-90-11538
2	Coupling compl. for pump unit MDFL	1	47-90-27103
3	Pressure switch compl. with cable	1	47-90-25363
4	T-piece compl. for pump unit	1	44-90-23080
5	Sealing washer AL 14 x 10 x 2	50	37-50-10788
6	Pressure pipe nipple	5	47-50-20127
7	Pressure pipe compl. for pump unit MDFL	1	47-90-27104
8	Hose nipple R 1/4“ x 6LL	10	47-50-20862
9	Oil pump 7JCCC, compl. for pump unit MDFL	1	47-90-27111
10	Hose nipple G 1/2“ x G 1/2“	1	47-90-12819
11	Metal hose NW10 1500 mm lg.	1	47-90-12818
12	Hydraulic hose DN 8, 1500 mm lg.	1	47-90-25302

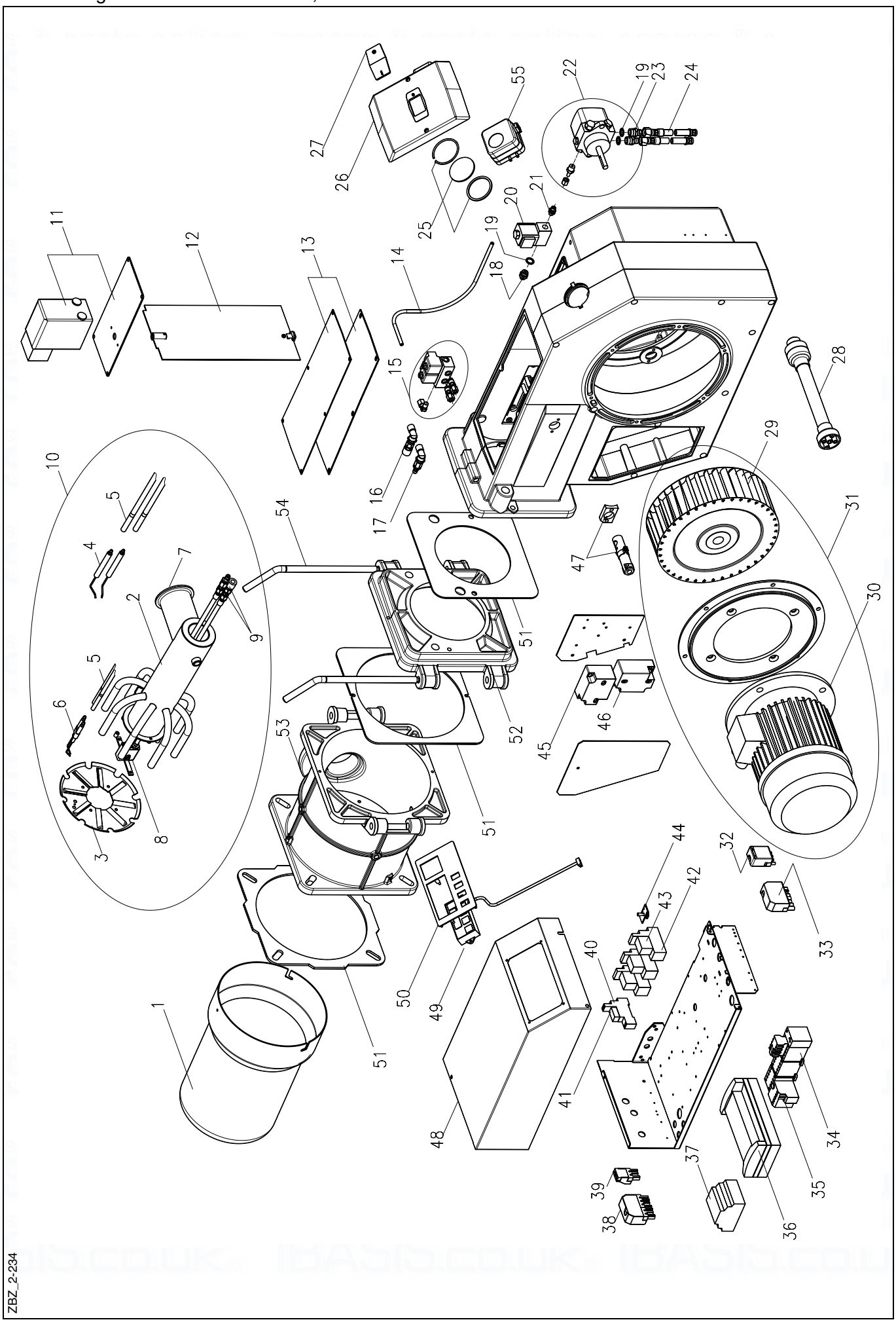
ZBZ_2-234
1
2
3
4
5
6
7
8
9
10
11
12
13
14
15
16
17
18
19
20
21
22
23
24
25
26
27
28
29
30
31
32
33
34
35
36
37
38
39
40
41
42
43
44
45
46
47
48
49
50
51
52
53
54
55

Item	Designation	PU	Art. No.
1	Burner pipe MDFL1510, MDFL1880	1	47-90-25392
1	Burner pipe MDFL1510, MDFL1880, extended 200 mm	1	47-90-25442
2	Mixing head MDFL1510, MDFL1880 welded	1	47-90-27091
2	Mixing head MDFL1510, MDFL1880 welded, extended 200 mm	1	47-90-27092
3	Baffle plate MDFL1510, MDFL1880	1	47-90-25088
4	Oil ignition electrodes compl.	1	47-90-26213
5	Oil / gas ignition cable set	2	47-50-25003
5	Oil / gas ignition cable set, extended 200 mm	2	47-50-25482
6	Gas ignition electrode compl.	1	47-90-24921
7	Seal for gas nozzle	5	47-50-12791
8	Nozzle holder MDFL compl. pre-assembled	1	47-90-25086
8	Nozzle holder MDFL compl. pre-assembled, extended 200 mm	1	47-90-25423
9	Hydraulic set	1	47-90-27087
10	Mixing head MDFL compl. pre-assembled, excl. ignition cable	1	47-90-25036
10	Mixing head MDFL compl. pre-assembled, extended 200 mm, excl. ignition cable	1	47-90-24993
11	Actuator drive SAD 3.0	1	47-90-24473
12	Air damper compl.	1	47-90-24464
13	Cover with seals	1	47-90-12982
14	Pressure hose NW4 compl.	1	47-90-25156
15	Double solenoid valve block compl.	1	47-90-27105
16	Hydraulic coupling compl.	1	47-90-25464
17	Hydraulic sealing nipple T2320V, compl.	1	47-90-25465
18	Hose nipple NW6 R 1/4“	10	37-50-11348
19	Sealing washer AL 13 x 18 x 2	50	37-50-11293
20	Solenoid valve R 1/4“	1	36-90-11583
21	Pressure pipe nipple GES 6LLR	1	47-90-20127
22	Oil pump AJ4, compl. for MDFL1510	1	47-90-26063
22	Oil pump AJ6, compl. for MDFL1880	1	47-90-26064
23	Hose nipple R 1/4“ x R 3/8“	10	46-50-10554
24	Metal hose NW8 1500 mm lg.	1	57-90-10348
25	Sight glass with seal	1	36-90-11544
26	Hood MDFL	1	47-90-24999
27	Cover for sight glass	5	47-50-12106
28	Coupling compl. DFL compl.	1	47-90-27096
29	Fan wheel TLR Ø 280 x 80 for MDFL1510	1	47-90-27093
29	Fan wheel TLR Ø 280 x 100 for MDFL1880	1	47-90-27099
30	3 kW motor for MDFL1510	1	47-90-12802
30	4 kW motor for MDFL1880	1	47-90-12803
31	3 kW motor with fan wheel for MDFL1510	1	47-90-27094
31	4 kW motor with fan wheel for MDFL1880	1	47-90-27100
32	4-pin socket green	1	37-90-20744
33	7-pin socket black/brown	1	37-90-20731
34	Star-delta combination YKB7-30	1	47-90-25176
35	Thermal overload relay 2.4 - 4.0 A	1	47-90-25172
36	Control box MPA 22	1	47-90-24166
37	Logic module CL-LSR	1	47-90-25177
38	7-pin socket green	1	37-90-10831
39	3-pin fermale connector black	1	37-90-20739

E. 30.07.07 • G. 07.06.11

Item	Designation	PU	Art. No.
40	Base CR-PLSx	1	47-90-26713
41	Relay CR-P230AC2	1	47-90-25199
42	Base CR-M4LS	1	47-90-26731
43	Relay CR-M230AC4	1	47-90-25181
44	Remote-manual switch	1	47-90-25040
-	Thermal overload relay for pump unit 2.4 - 4 A	1	47-90-25172
-	Mini motor contactor B7-30-10 for pump unit	1	47-90-25171
45	Ignition transformer Fida Mod. 26/35 incl. ignition cable 200 mm lg.	1	47-90-26790
46	Ignition transformer Fida Mod. 26/48 incl. ignition cable 200 mm lg.	1	47-90-27095
47	Flame controller KLC1000	1	47-90-27184
48	Hood for switch box MK30	1	47-90-25206
49	MPA display AM07	1	47-90-24167
50	Facing panel MDFL	1	47-90-25074
51	Seal set	1	47-90-26792
52	Gas jacket MG3 part 2	1	47-90-12771
53	Gas jacket MG3 part 1	1	47-90-12770
54	Fixing bar MG3	2	46-90-12809
55	Differential pressure monitor 2.5 - 50 mbar	1	47-90-26723
-	Inlet nozzle	1	47-90-12875

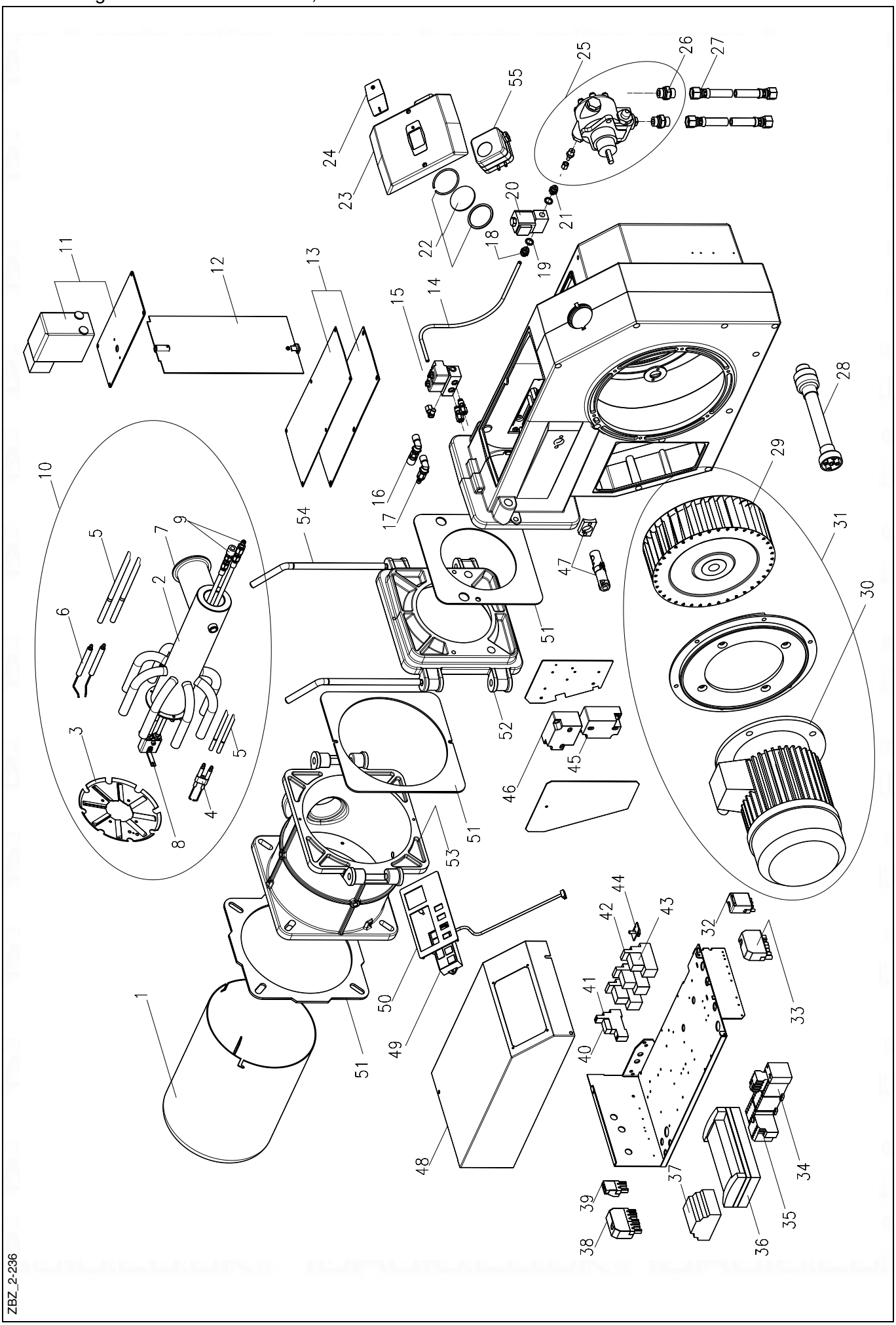
ZBZ_2-236

Item	Designation	PU	Art. No.
1	Burner pipe MDFL2505, MDFL2705	1	47-90-25393
1	Burner pipe MDFL2505, MDFL2705, extended 200 mm	1	47-90-25443
2	Mixing head MDFL2505, MDFL2705 welded	1	47-90-27097
2	Mixing head MDFL2505, MDFL2705 welded, extended 200 mm	1	47-90-27098
3	Baffle plate MDFL2505, MDFL2705	1	47-90-25238
4	Oil ignition electrodes compl.	1	47-90-26213
5	Oil / gas ignition cable set	2	47-50-25003
5	Oil / gas ignition cable set, extended 200 mm	2	47-50-25482
6	Gas ignition electrode compl.	1	47-90-24921
7	Seal for gas nozzle	5	47-50-12791
8	Nozzle holder MDFL compl. pre-assembled	1	47-90-25086
8	Nozzle holder MDFL compl. pre-assembled, extended 200 mm	1	47-90-25423
9	Hydraulic set	1	47-90-27087
10	Mixing head MDFL compl. pre-assembled, excl. ignition cable	1	47-90-25272
10	Mixing head MDFL compl. pre-assembled, extended 200 mm, excl. ignition cable	1	47-90-25425
11	Actuator drive SAD 3.0	1	47-90-24473
12	Air damper compl.	1	47-90-24464
13	Cover with seals	1	47-90-12982
14	Pressure hose NW4 compl. 400 mm	1	47-90-25156
15	Double solenoid valve block compl.	1	47-90-27105
16	Hydraulic coupling compl.	1	47-90-25464
17	Hydraulic sealing nipple T2320V, compl.	1	47-90-25465
18	Hose nipple NW6 R1/4“	10	37-50-11348
19	Sealing washer AL 13 x 18 x 2	50	37-50-11293
20	Solenoid valve R 1/4“ compl. for MK3.3, MK3.4	1	47-90-27107
21	Hose nipple R1/4“ x 6LL	1	47-90-20862
22	Sight glass with seal	1	36-90-11544
23	Hood MDFL	1	47-90-24999
24	Cover for sight glass	5	47-50-12106
25	Oil pump J7CCC, compl.	1	47-90-27110
26	Hose nipple EST G 1/2“ x G 1/2“	1	47-90-12819
27	Metal hose NW10 1500 mm lg.	1	47-90-12818
28	Coupling compl. MDFL2505 compl.	1	47-90-27101
28	Coupling compl. MDFL2705 compl.	1	47-90-27102
29	Fan wheel TLR Ø 280 x 100 for MDFL2505	1	47-90-27099
29	Fan wheel TS Ø 290 x 114 for MDFL2705	1	47-90-22850
30	4 kW motor for MDFL2505	1	47-90-12803
30	5.5 kW motor for MDFL2705	1	47-90-22876
31	4 kW motor with fan wheel for MDFL2505,	1	47-90-27100
31	5.5 kW motor with fan wheel for MDFL2705	1	47-90-26801
32	4-pin socket green	1	37-90-20744
33	7-pin socket black/brown	1	37-90-20731
34	Star-delta combination YKB7-30	1	47-90-25176
35	Thermal overload relay 6 - 9 A	1	47-90-25174
36	Control box MPA 22	1	47-90-24166
37	Logic module CL-LSR	1	47-90-25177
38	7-pin socket green	1	37-90-10831
39	3-pin fermale connector black	1	37-90-20739

Item	Designation	PU	Art. No.
40	Relay CR-P230AC2	1	47-90-25199
41	Base CR-PLSx	1	47-90-26713
42	Base CR-M4LS	1	47-90-26731
43	Relay CR-M230AC4	1	47-90-25181
44	Remote-manual switch	1	47-90-25040
-	Thermal overload relay for pump unit 2.4 - 4 A	1	47-90-25172
-	Mini motor contactor B7-30-10 for pump unit	1	47-90-25171
45	Ignition transformer Fida Mod. 26/35 incl. ignition cable 200 mm lg. for MDFL2505, MDFL2705	1	47-90-26790
46	Ignition transformer Fida Mod. 26/48 incl. ignition cable 200 mm lg. for MDFL2505	1	47-90-27095
46	Ignition transformer Fida Mod. 26/48 incl. ignition cable 460 mm lg. for MDFL2705	1	47-90-26930
47	Flame controller KLC1000	1	47-90-27184
48	Hood for switch box MK30	1	47-90-25206
49	MPA display AM07	1	47-90-24167
50	Facing panel MDFL	1	47-90-25074
51	Seal set	1	47-90-26792
52	Gas jacket MG3 part 2	1	47-90-12771
53	Gas jacket MG3 part 1	1	47-90-12770
54	Fixing bar MG3	2	46-90-12809
55	Differential pressure monitor 2.5 - 50 mbar	1	47-90-26723
-	Inlet nozzle	1	47-90-12875

spares & parts online IBASIS.CO.UK

31. Adjustments log

Please enter the measured values into the Adjustments log.

Boiler type	Gas fitting

Measured values		min.	max.	Date
P0 (start point)				
P1 (min load)				
P9 (max load)				
Flue gas temperature	°C			
Carbon dioxide (CO_2 level)	%			
O_2 content	%			
CO level	%			
Flue	mbar			
Nozzle pressure	mbar			
Boiler pressure	mbar			
Room temperature	°C			
Gas type				
Setting value **V** at the fitting				
Setting value **N** at the fitting				

32. Declaration of conformity for dual-fuel burner for heating oil EL and natural gas or liquid gas

We, Enertech GmbH, D-58675 Hemer, hereby declare on its own responsibility that the products

MDFL ...

are in conformity with the following standards and regulations:

EN 267

EN 676

EN 50081

EN 50082

EN 60335

These products are CE labelled in compliance with the provisions of the following directives:

98 / 37 / EEC Machinery Directive

89 / 336 / EEC EMC Directive

73 / 23 / EEC Low Voltage Directive

92 / 42 / EEC Energy Efficiency Directive

CE - 0085BR0306 according to Test Report 143192E1/15563 (GWI) and
CE - 0085BR0307 according to Test Report 139082E1/15564 (GWI).

Hemer, 1 November 2007

R. Rebbe, Head of Operation

E. 30.07.07 • G. 07.06.11

33. Dimensions (All dimensions are given in mm)

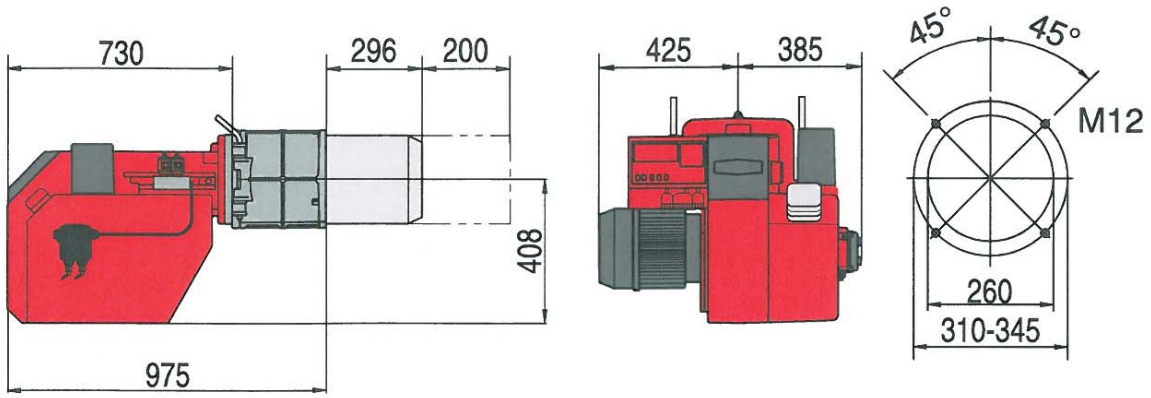

34. Working ranges

Gas / oil

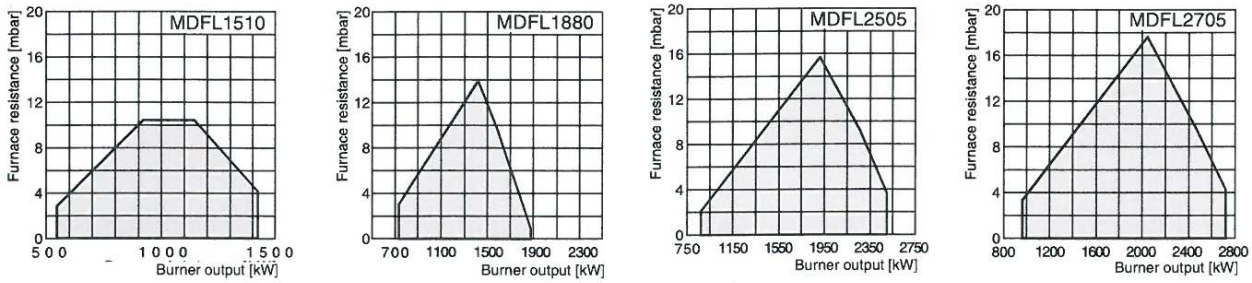

Working ranges according to EN 676 and EN 267.

Enertech Limited,
P O Box 1,
Vines Lane
Droitwich,
Worcestershire,
WR9 8NA

Tel: +44 (0) 1905 794331 **Fax:** +44 (0) 1905 794017
Email: info@nu-way.co.uk **Web:** www.nu-way.co.uk

NU-WAY®
Enertech Group