NU-WAY
Enertech Group

Installation & Maintenance Manual

MDFL 3300
MDFL 4000

Dual Fuel Burner

Tel: +44 (0) 1905 794331 **Fax:** +44 (0) 1905 794017 **Email:** info@nu-way.co.uk **Web:** www.nu-way.co.uk

CONTENTS

BURNER & COMPONENT INDENTIFICATION FOR MDFL 3300 & 4000 3
INTRODUCTION 5
FEATURES 5
Burner Capacity 5
Fuel 5
Air Fan Size 5
Controls and Safety Systems 5
Operating Mode 5
SITE CONDITIONS AND SERVICES 6
Flue and Chimney Requirements 6
Plant Room Ventilation 6
Combustion Chamber Conditions 6
Gas Supply 6
Gas Boosters 6
Electrical Power Supply 7
Oil Supply 7
Pumped Oil Ring Main 8
UNPACKING AND ASSEMBLY 9
INSTALLATION 9
BURNER CONTROL AND OPERATION 10
Air Controls 10
Gas Controls 10
Air Damper Motor 11
Gas train 12
Oil Controls – Single Spill-Back Nozzle 16
Control Panel 20
Burner Controller 20
Modulating Controller 20
BURNER OPERATING SEQUENCE 22
MODULATING CONTROLS 23
Controller 23
Commissioning Controls 23
Temperature Detector 23
Pressure Detector 23
General 23
COMMISSIONING : GENERAL 24
Safety and Emergency Notes 24
Inspection 24
Initial Settings 25
COMMISSIONING : OIL 26
Burner Dry Run 26
Burner Live Run 27
COMMISSIONING : GAS 30
Burner Dry Run 30
Burner Live Run 31
FINAL COMMISSIONING STAGES – OIL and GAS 34
Checking the Flame Signal 34
Setting the Air Pressure Switch 34
Modulating Control : Siemens RWF 40 35
Final Checks 36
On Completing Commissioning 36

FULL CHANGEOVER PROCEDURE **37**
Switching from Gas to Oil 37
Switching from Oil to Gas 37

ROUTINE SAFETY CHECKS **37**
Combustion Air 37
Flame Detector 37
Valve Proving System (if fitted) 37

ROUTINE MAINTENANCE **38**
Combustion Air Fan 38
Replacing the Air/Gas Ratio Controller 38
Oil Filters 38

FAULT FINDING **39**
Burner Motor fails to Start 39
Fan Starts and Burner goes to Lockout 39
Start Flame Failure 40
Incorrect Rotation of Burner Motor 40
Main Flame is Not Established 40
Burner Motor only runs Continuously 40

SPARE PARTS **40**
APPENDIX **41**
Burner Head Details 41
Electrode Setting Detail 42
Performance Envelopes 43
Oil Commissioning Sheet 44
Gas Commissioning Sheet 45

BURNER SERVICE RECORD **46**
NOTES **47**

IMPORTANT – SAFETY

It is essential that the following instructions and adjustments are carried out by qualified engineers that are experienced in forced draught gas and pressure jet oil burner commissioning. In the UK it is a legal requirement that these engineers should also be CORGI registered. Nu-way cannot be held responsible for any consequential damage, loss or personal injury as a result of customers failing to follow these instructions, or as a result of misuse. Your attention is drawn to the **Emergency Instructions** on Page 24.

EUROPEAN BOILER EFFICENCY DIRECTIVE (B.E.D.)

All burners and boiler bodies marketed separately should comply with EN 267 (oil burners) or EN676 (gas burners) and EN303-1 (boiler bodies).

Burner adjustments must be made in accordance with boiler manufacturer's instructions, and these must include flue gas temperatures, average water temperature, and CO_2 or O_2 concentration.

BURNER AND COMPONENT IDENTIFICATION FOR MDF MODULATING BURNER (MODEL MDFL 3300 SHOWN)

Item	Description	Item	Description
1	Burner Casing	13	Valve Proving Pressure Switch
2	Hinged Extension	14	Modulating Cam Box
3	Flame Tube	15	Valve Proving System
4	Fan Motor	16	Pilot Solenoid Valve
5	Air Inlet	17	Pilot Governor
6	Damper Motor	18	Low Gas Pressure Switch
7	Burner Terminal Panel	19	Flexible Oil Pipe
8	Casing Access Lid	20	Quick Release Oil Couplings
9	High Gas Pressure Switch	21	Pressure Gauges
10	Valve Body	22	Oil Manifold
11	Control Valve	23	Manual Gas Interlock Valve
12	Main Valve		

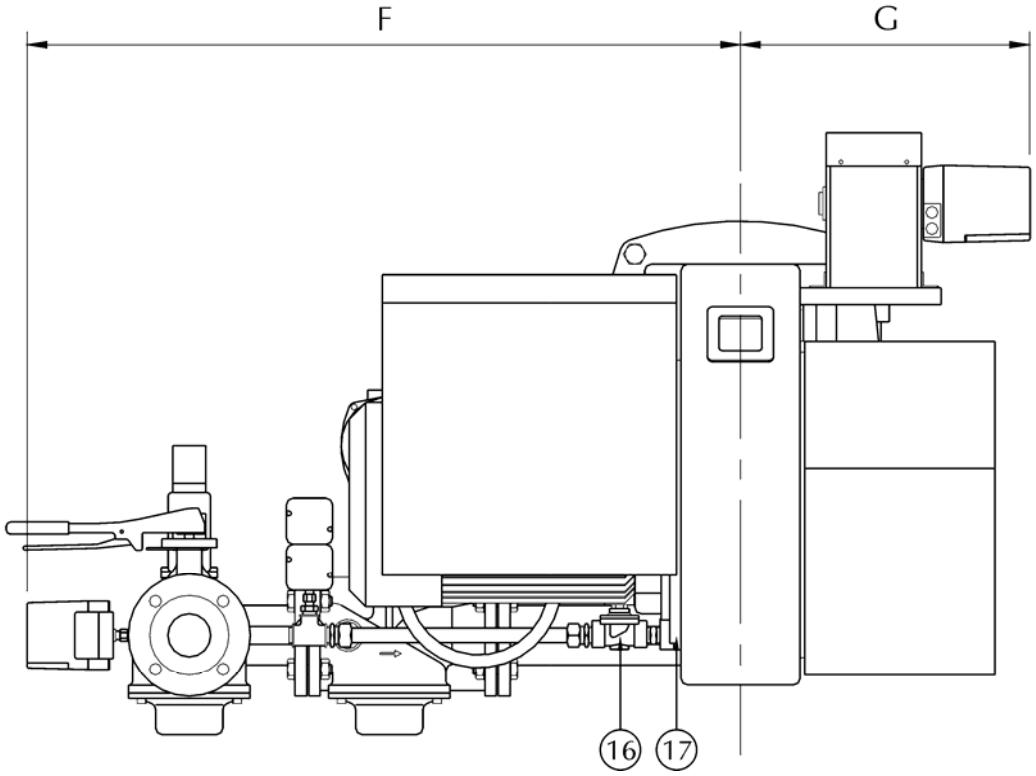

BURNER DIMENSIONS
Single Spill-back Oil Nozzle Burners **Models MDFL 3300 and 4000**

Model	Dimensions (mm)						
	A	B	C	D	E	F	G
MDFL 3300-36	1240	920	345	580	416	1196	440
MDFL 3300-41	1240	920	345	580	416	1196	440
MDFL 4000-36	1240	920	345	580	416	1210	440
MDFL 4000-41	1240	920	345	580	416	1210	440
MDFL 4000-44	1240	920	345	580	416	1210	440

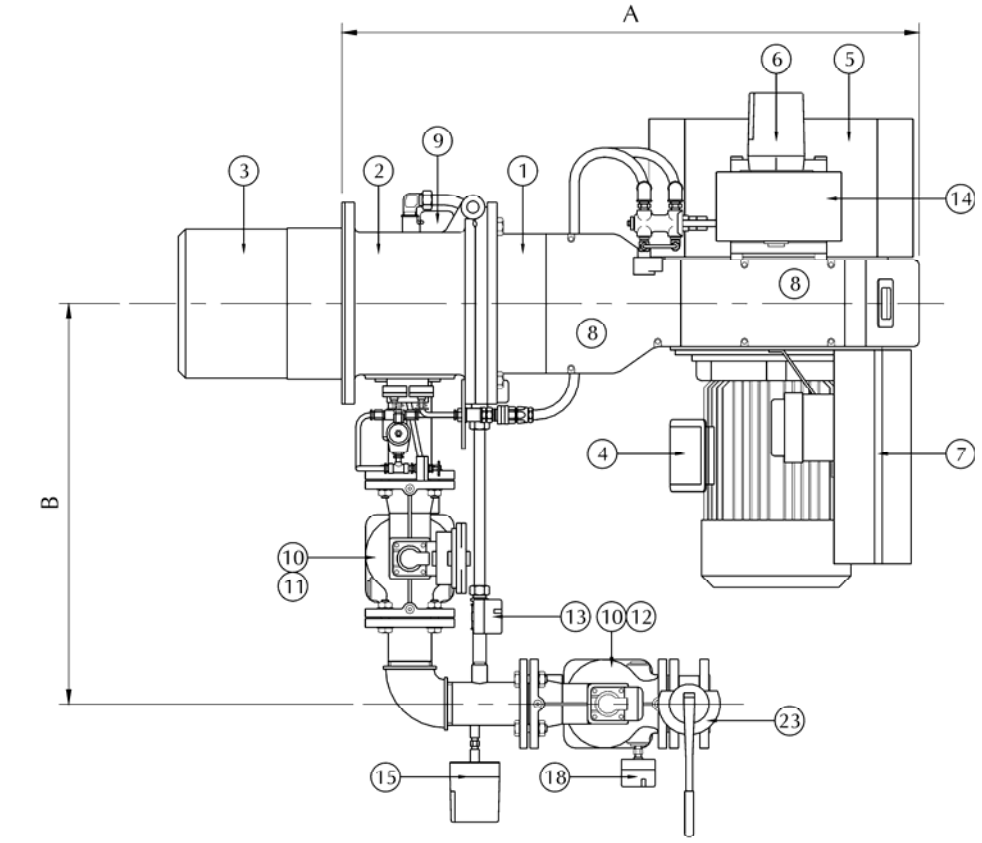

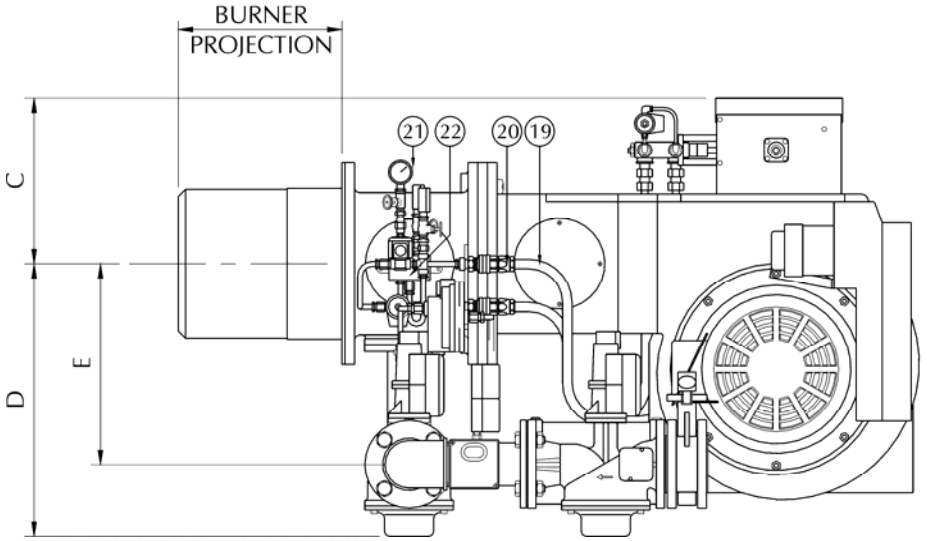

BURNER MOUNTING ARRANGEMENT

MODELS MDFL 3300 & 4000

Hole Diameter: 350mm

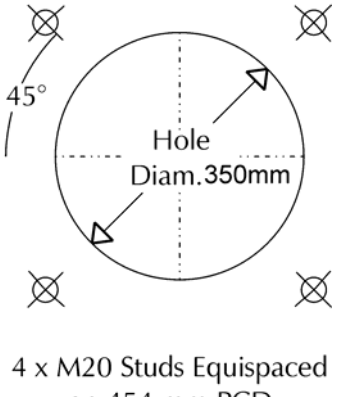

INTRODUCTION

This manual has been produced to enable users to install, commission and use the MDFL burners safely and efficiently. At each stage the conditions that should be met and the adjustments and other actions that should be carried out are detailed and the locations of the various components and adjustment mechanisms are identified. Where appropriate, this information is supported by tables and graphs.

FEATURES

Developed through extensive field experience in the UK and overseas markets, the MDFL series of dual fuel burners meets all current test authority requirements in these markets and sets new standards in efficient and reliable operation.

MDFL burners are designed for flange mounting to the appliance frontplate and they are delivered ready to install with a pre-wired packaged control system and plug-in gas train.

Burner Capacity

The figures quoted are nominal burner outputs based on the nett calorific value.

Burner Model	Capacity kW
MDFL 3300	1550-3367
MDFL 4000	1350-4095

Please refer to the Appendix of this handbook for detailed burner performance data.

Fuel

MDFL burners are suitable for light distillate oil (Class D) and Natural Gas

Air Fan Size

To match MDFL burners with the appliance, with respect to both burner output and appliance resistance, a number of combustion air fan sizes are available for each model, as detailed in the table opposite.

Burner Model	Available Fan Sizes
MDFL 3300	36, 41
MDFL 4000	36, 41, 44

The fan size quoted is the diameter of the fan impellor (measured in cm) and appears as a suffix to the model number. For example, a burner designated MDFL 3300-36 is a model 3300 with a 36cm diameter combustion air fan impellor.

Controls and Safety Systems

MDFL burners are fitted with a combustion airflow control and an air/fuel ratio control system which together ensure smooth starting and optimum operating efficiency.

An air pressure switch provides safe burner shutdown if the combustion air supply becomes insufficient for complete combustion. The burners additional safety systems include for gas pressure monitoring (low and high) whilst gas firing. Continuous flame supervision is provided by an ultraviolet (UV) cell and automatic programming control unit.

Operating Mode

The MDFL 3300 and 4000 burners operate in fully modulating mode when firing on gas, and 2 stage (high/low) mode when firing on oil.

Oil Firing – 2 stage Operation

MDFL 3300 and 4000 burners are supplied with a system designated ‘Sliding High/Low’ which uses a single spillback oil nozzle (similar to that employed in the fully modulating mode) which is constrained to operate at either of two fixed oil flows corresponding to the high and low fire rates. If the burner has been correctly matched to the appliance, a turndown ratio of up to 3.0:1 may be achieved.

Gas Firing – all Models

When gas firing, the fuel gas flow is controlled by an automatic valve which, following commissioning, precisely matches the fuel flow to the air flow to achieve the required fuel/air ratio at any point in the full turndown range. If the burner has been correctly matched to the appliance, a turndown ratio between 2.0 and 2.5:1 may be achieved.

SITE CONDITIONS AND SERVICES

Flue and Chimney Requirements

It is important that:

- The flue pipe from the appliance and the joint between this flue and the chimney are sealed to prevent leakage of combustion products.
- The flue pipe from the appliance does not protrude into the chimney beyond the inside wall.
- The top of the flue or chimney shall be higher than any roof within a radius of 10 metres.
- Checks are made to ensure that the chimney is suitable for gas and oil fired appliances and that the proposed installation complies with all Local Authority and other regulations covering such installation.
- The flue must be balanced at the appliance outlet.
- If more than one appliance is connected to a common flue or chimney, the cross-section of this flue or chimney should be adequate for the total volume of combustion products from the appliances.

Plant Room Ventilation

The burner must be supplied with dust-free air at sufficient rates for all firing conditions, in accordance with the appropriate Standards.

Combustion Chamber Conditions

When the burner is fitted to an appliance designed to work under balanced or negative combustion chamber pressure conditions the over-fire draught must not exceed 0.25 mbar.

Gas Supply

The gas supply pipework to the burner must be appropriate to local conditions and must be constructed and installed in compliance with appropriate Codes and Standards. It shall be of sufficient size to satisfy the pressure and volume flow requirements of the burner under all firing conditions. Checks should be made to ensure that all meters and other components are appropriately rated for the maximum gas flow rate anticipated.

It is essential that a 90° manual isolation valve is fitted upstream of the gas control train to allow the burner to be isolated for maintenance. The size of this valve should not be less than that of the burner control train in order to avoid any restriction in gas flow.

Gas Boosters

When a gas booster is used, the gas pressure at the booster inlet must not fall below 10 mbar under any conditions. A low gas pressure switch must be fitted on the upstream side of the booster to prevent it starting if the supply pressure is insufficient.

An additional pressure switch should be used to monitor the pressure downstream of the booster and prevent the burner going to high fire if the pressure is insufficient.

The booster should be installed as near to the burner as possible. It should be noted that CE marked burners fitted with a low gas pressure switch will not run if the gas pressure from the booster is insufficient. This is due to the low gas switch being set to safeguard combustion quality at the high fire setting. In this situation the booster outlet pressure switch will have no bearing on the burner control, but can only be used to indicate booster failure.

The booster should be installed as near to the burner as possible. It should be positioned on a firm, flat, horizontal surface using anti-vibration mountings. All connecting pipework should be well-supported and accurately positioned in order to avoid stressing the booster casing. Flexible connectors, which reduce both pipework stresses and transmitted noise, must be fitted. The gas supplier should be asked to recommend the size of pipework between the meter and the booster to ensure that the required pressure and flow are available.

ELECTRICAL POWER SUPPLY

A 400 Volt, three-phase, 50Hz supply is required. Power requirements are listed in the table below.

The power supply provided must comply with all relevant Codes and Standards.

BURNER	Fan Motor kW/hp	Pump Motor kW/hp	Start Current A/Phase	FLC A/Phase	Cable Size (mm^2)	HRC Fuse (A)
MDFL 3300-36	7.5 / 10.0	1.5 / 2.0	101.3	17.3	4.0	40
MDFL 3300-41	11.0 / 15.0	1.5 / 2.0	97.0	25.3	6.0	40
MDFL 4000-36	11.0 / 15.0	1.5 / 2.0	97.0	25.3	6.0	40
MDFL 4000-41	11.0 / 15.0	1.5 / 2.0	97.0	25.3	6.0	40
MDFL 4000-44	15.0 / 20.0	1.5 / 2.0	123.6	32.9	10.0	50

Note: 7.5 kW burner fan motors are started D.O.L.
Above 7.5 kW Star/Delta starters are fitted.

OIL SUPPLY

The oil supply pipework to the burner must be appropriate to local conditions and must be constructed and installed in compliance with appropriate Codes and Standards. It shall be of sufficient size to satisfy the pressure and flow requirements of the burner under all firing conditions. Checks should be made to ensure that all meters and other components are appropriately rated for the maximum oil flow rate anticipated. Galvanised steel pipe should not be used. The supply pipework should include an appropriate filter. The final connection to the oil pump inlet port should be made using the flexible pipes supplied with the burner.

MDFL burners may employ a pumped ring main or a gravity feed oil supply system.

Where a gravity feed system is used it should be designed and sized such that the oil pressure at the pump inlet is not less than 350 mbar and not more than 689 mbar. When a two-pipe system is used, it is important to ensure that the return pipe is not obstructed as this may result in damage to the pump.

Where it is thought desirable, a pumped ring main (refer to schematic diagram on page 8) of appropriate capacity may be used for MDFL burners. The capacity of the ring main pump should be at least 1.25 times that of the burner pump(s) that it is required to supply.

OIL HANDLING TEMPERATURES AND PRESSURES

Fuel Handling Temperatures (°C)					Fuel Delivery Pressures (At Inlet to Burner Oil Pump)	
Fuel Class	Viscosity (Seconds)	Minimum From Tank	Burner Inlet	Atomising	kg/cm^2	psi
D	35	Minimum 5 recommended			0.35 to 0.70	5.0 to 10.0

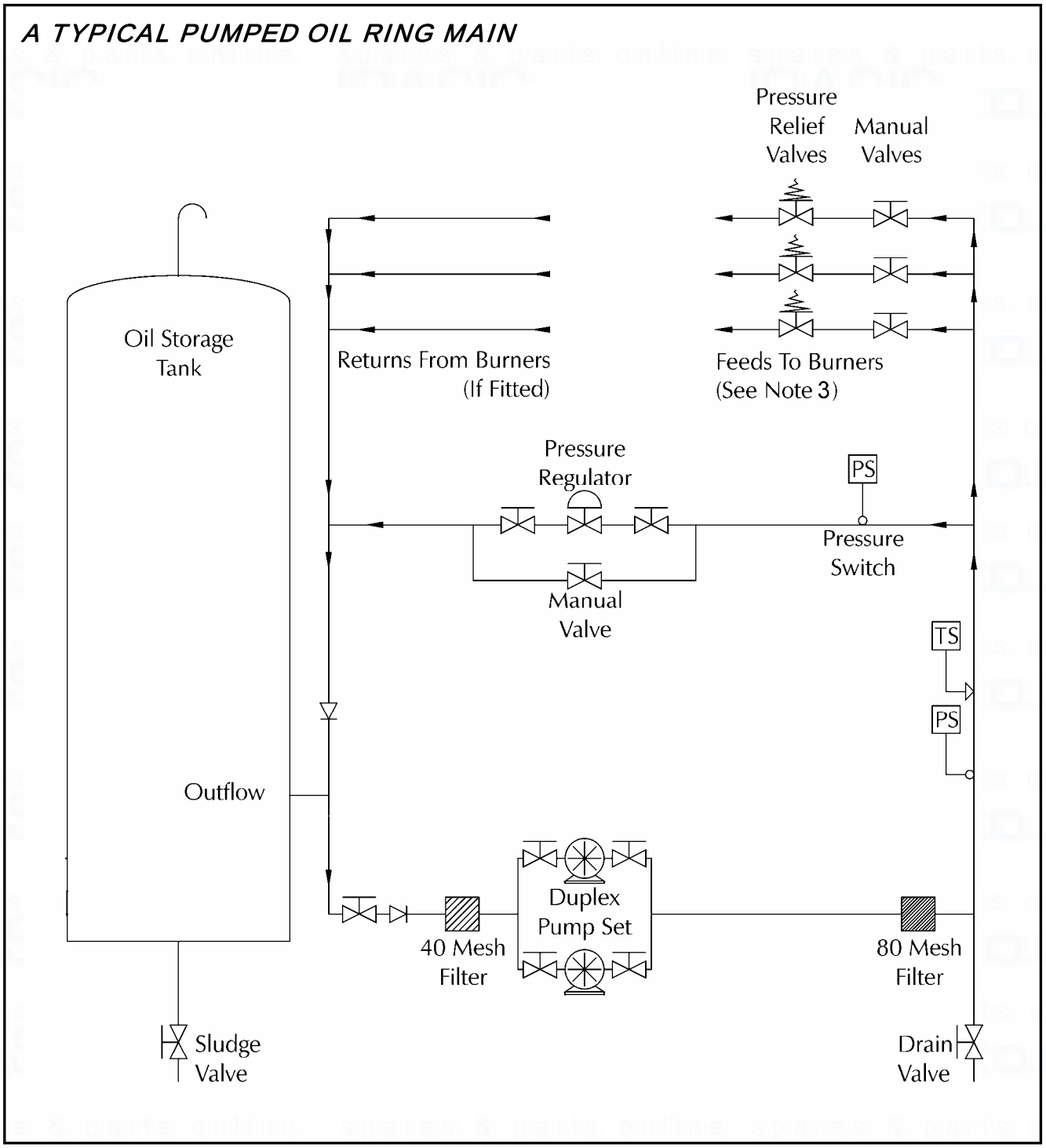

Notes:

1. Duplex pumps are recommended for continuity and serviceability.

2. Pre-heating Class D fuel is not normally required, but a minimum temperature of 5°C should be maintained and all exposed pipework must be lagged.

3. If a shut-off valve is fitted in the supply line to the burner oil pump inlet then a pressure relief valve MUST also be fitted to prevent damage should the shut-off valve be inadvertently left closed during the burner start-up cycle. The relief valve must be set at 0.70 kg/cm^2 (10 psi) above the normal supply pressure.

UNPACKING and ASSEMBLY

To safeguard against damage in transit, MDFL burners are supplied in partly assembled form.

Spill-back Burners

MDFL burners systems comprise of the following units:

- The burner body, complete with hinged extension, flame tube assembly and control panel if fitted
- The gas control train
- The oil pump unit
- A free-standing or wall-mounted control panel, if supplied

To assemble the burner:

- Fit the gas control train to the burner body using the gasket supplied, ensuring that the gasket is fitted correctly with all holes corresponding with those on the burner flange.
- Connect the combustion air impulse pipe from the SKP75 air/gas ratio controller to the left side of the hinged extension.
- Connect the multi-pin plug on the gas valve train to the socket on the rear of the burner-mounted terminal panel.
- Place and secure the oil pump/pumping and heating unit in the desired position. The floor mounting arrangements are shown on page 17 (distillate fuels). Connect the unit to the burner pipework using the flexible connectors provided.
- Fix the control panel in an appropriate position and make the electrical connections to the burner package and oil pump unit, as shown in the wiring diagram contained in the instruction pack attached to the burner.

Note: In some circumstances it may be advisable to fit the burner casing to the appliance before attaching the gas control train. It is recommended that lifting gear should be employed if necessary.

INSTALLATION

General

Ensure that the appliance is suitable for the heat input of the burner. If there is any doubt in this area reference should be made to the appliance manufacturer. Detailed burner performance data are presented in the Appendix of this handbook.

Fitting to the Appliance

If the burner is to be fitted to a new appliance, refer to the appliance manufacturer's recommendations.

If the burner is to be fitted to an existing appliance, a mounting flange must be provided as detailed in the section of Burner and Components Identification. Ensure that the joint between the burner and the mounting flange is sealed effectively using the gasket provided.

The flame tube should be flush with the inner face of the appliance combustion chamber. Up to 10mm protrusion may be acceptable (refer to the appliance manufacturer) however it is not generally permissible for the flame tube to sit within the appliance firing tunnel.

Special extensions may be specified by the appliance manufacturer, for example in the case of a reverse flame boiler.

Electrical Power Connection

Connect a three-phase, 50 Hz electrical supply to the burner, observing all applicable Codes and Standards. The electrical connections required are shown in the wiring diagram contained in the instruction pack attached to the burner. These diagrams also show the external auxiliary control connections which must be made.

If the burner is supplied as part of a packaged appliance/burner unit, refer to the appliance manufacturer's instructions.

BURNER CONTROL and OPERATION

AIR CONTROLS

Air Regulator

The flow of combustion air into the burner is controlled by a multiple-aperture rotary type damper, fitted to the burner casing within the air inlet silencer on the right hand side of the burner.

Air Damper Motor

In all cases, the air damper is controlled by a servomotor containing adjustable limit switches for the low and high fire positions.

The single spill-back burners employ a Landis & Staefa SQM10 motor, as shown on Page 11. This motor activates the damper through an adjustable cam and cable system, and is mounted above the air inlet on all models.

Air Diffuser

The air diffuser is fitted to the front of the burner assembly, within the flame tube (refer to the Appendix). This diffuser controls the combustion air flow and creates a pressure drop across the burner head, promoting good fuel/air mixing and flame stability.

Air Pressure Switch

The air pressure switch is located on the left side of the burner casing. Its function is to ensure that combustion air flow is adequate under all operating conditions.

Air flow failure at any stage beyond the first few seconds of the pre-purge sequence will result in burner lockout.

GAS CONTROLS

A typical gas train fitted is shown on page 12.

High Gas Pressure Switch

A high gas pressure switch is fitted at the outlet of the gas train to ensure that any increase in gas supply pressure above the level needed to maintain the set conditions results in a safe burner shutdown. In most cases, high gas pressure would indicate a fault with the air/gas ratio controller.

The pressure switch, which is fitted with an illuminated fault indicator and manual reset button, is factory set to the maximum value. Final adjustment of the setting of this switch is described in the section on Commissioning.

Low Gas Pressure Switch

Provision of a low gas pressure switch is required by European Standard EN676 – Automatic forced draught burners for gaseous fuels. The pressure switch is fitted to all burners which carry the CE marking but it may not be fitted to non-CE marked burners.

The low gas pressure switch monitors inlet gas pressure and ensures that any decrease in gas pressure below the value needed to maintain satisfactory combustion results in a safe burner shutdown. Final adjustment of the setting of this switch is described in the Section on Commissioning.

Gas Valve Train

In addition to the pressure switches noted above, the gas control train includes an air/gas ratio controller, automatic safety shut-off valves and a governor in the start gas line. A manual isolation valve must be fitted at the inlet to the gas train during installation. This valve must be in the closed position when firing the burner on oil.

.

AIR DAMPER SERVOMOTOR : SINGLE SPILL-BACK NOZZLE BURNERS

Model : Landis & Staefa SQM 10

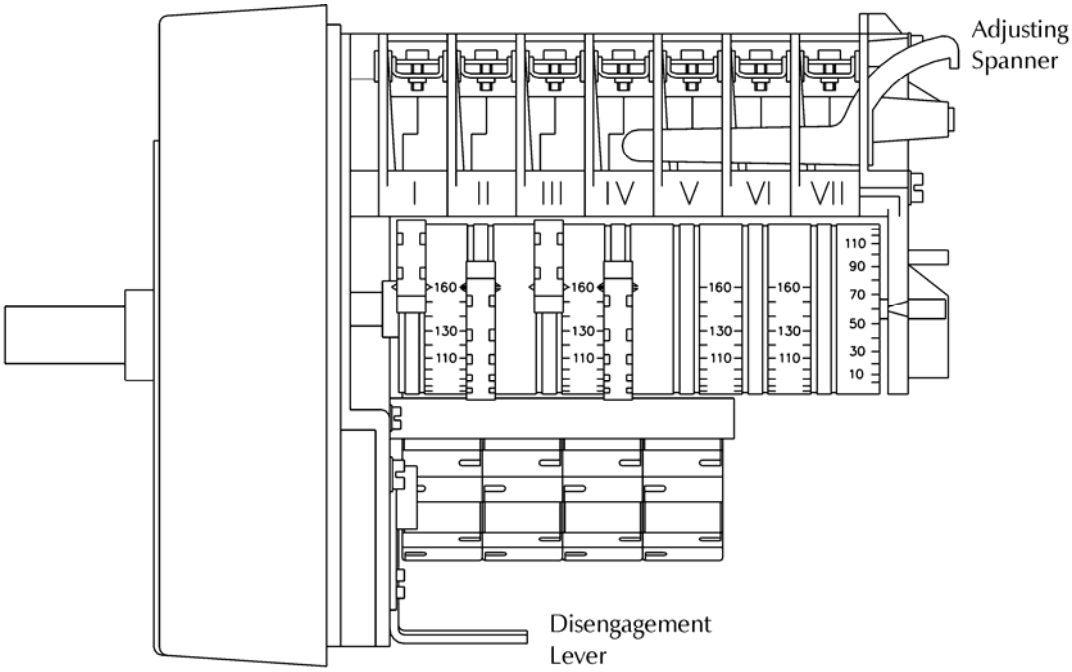

Factory Settings			
Cam	**Function**		**Setting**
1	Gas Firing	High Fire Air	160°
2		Low Fire Air	0°
3	Oil Firing	High Fire Air	160°
4		Low Fire Air	0°
5	Not Used		
6			
7			

Notes:

1. The servomotor operates both the air damper mechanism and the oil spill adjusting valve via mechanical cam arrangements mounted on a common shaft within the 'Modulating Cam Box'.

2. The operation and adjustment of the 'Modulating Cam Box' arrangement should be fully understood before attempting to adjust the motor settings.

3. Cams 1 and 4 represent the low and high limits of the mechanism. These are factory set and should not require further adjustment.

4. Cams 2 and 3 may be adjusted to give the correct related burner firing rates on gas and oil.

5. The cam assembly can be rotated manually by disconnecting it from the drive motor using the disengagement lever. The cams are adjusted with the special 'C' spanner provided.

TYPICAL GAS TRAIN

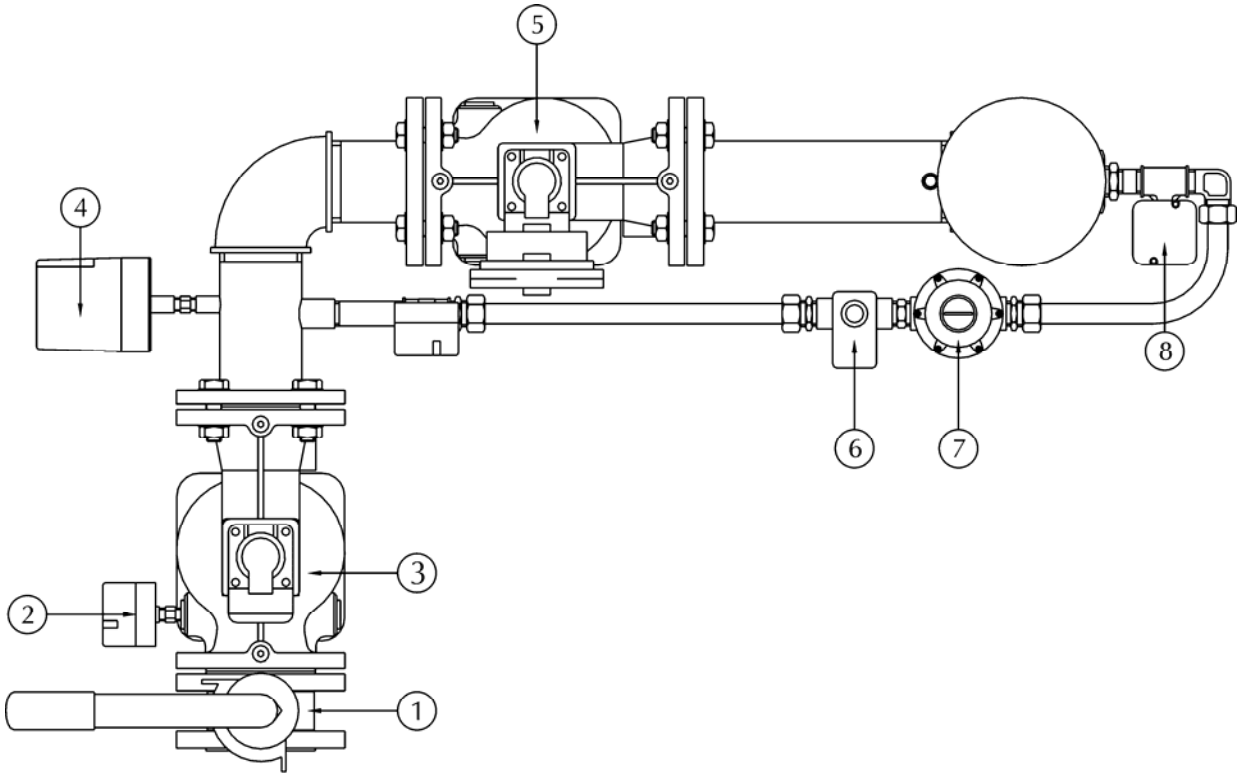

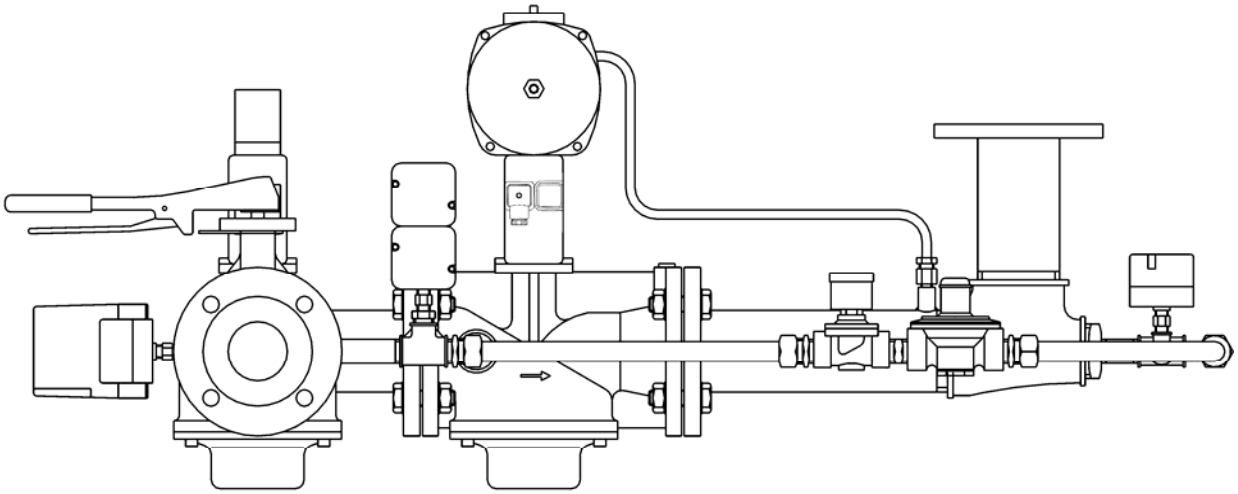

Item	Description	Item	Description
1	Manual Gas Interlock Valve	5	Control Valve
2	Low Gas Pressure Switch	6	Pilot Solenoid Valve
3	Main Valve	7	Pilot Governor
4	Valve Proving System	8	High Gas Pressure Switch

SKP75 Air/Gas Ratio Controller

The air/gas ratio controller, shown below, varies the gas pressure in response to changes in combustion air pressure to ensure that the air/gas ratio remains constant over the operating range of the burner.

A separate gas pressure governor is not necessary. Two impulse pipes (both factory supplied) are connected to the air/gas ratio controller.

The first is connected to the burner hinged extensions and supplies air pressure to the ratio controller. Note that in installations with negative air pressure in the combustion chamber, this pipe must always be under positive pressure. A second pipe connected to the gas line downstream of the valve set provides gas pressure to the ratio controller.

SKP75 combustion chamber impulse connection

The impulse connection to the combustion chamber is not required in the majority of applications and is therefore not supplied as part of the burner package.

This is because the resistance of the combustion chamber/flue assembly is assumed to remain constant and that the pressure within this chamber will change in proportion to the burner gas and combustion air pressure (as the burner output changes).

If however the pressure in the combustion chamber does not change in proportion to the burner gas or air pressure, i.e. the plant is fitted with a flue gas fan, continuously operating flue gas damper, or the combustion chamber pressure changes from negative to positive whilst moving from Low to High flame, then a compensating circuit is required.

This means that the pressure in the combustion chamber must be connected to the SKP75 so that the controller can automatically offset the pressure changes.

This compensating circuit should also be used if pressure shocks and vibrations, which adversely affect the burner start-up, develop in the combustion chamber during the start-up phase.

Naturally, it must always be taken into consideration that the burner output decreases as the pressure in the combustion chamber increases, and vice versa.

GAS CONTROL VALVE (SKP 75)

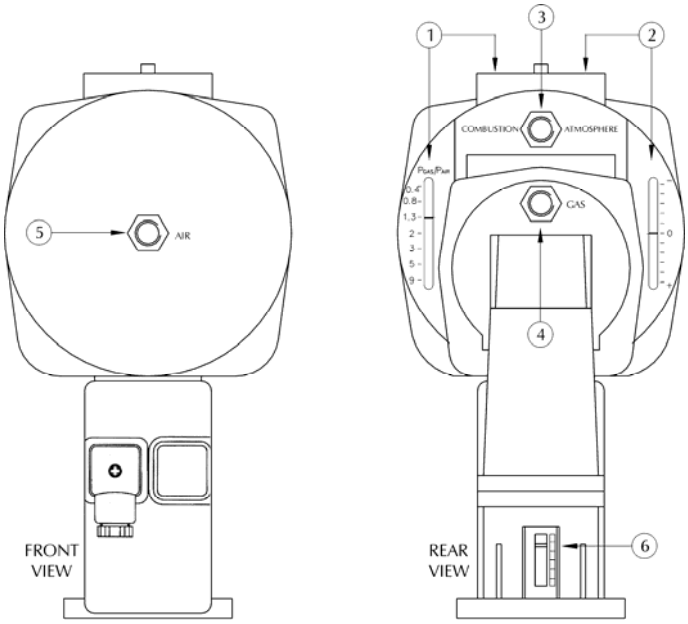

Item	Function
1	Adjustment and indication of the gas/air ratio (high fire settings)
2	Adjustment and indication of the parallel displacement of the characteristic (low fire setting)
3	Vented to atmosphere
4	Connection to the fuel gas line
5	Connection to the combustion air supply at the burner head
6	Indication of the valve stroke

Installation of combustion chamber impulse pipe

A minimum inside pipe diameter of 8mm is recommended. The impulse pipe should be as short as possible to allow the controller to respond quickly to sudden burner output changes. It must be installed such that the gases will cool down in the area of the impulse pipe and condensing gases will not enter the controller but run back into the combustion chamber. If necessary, a water trap must be provided.

Valve Proving System

Valve proving systems are standard on all MDFL 3300 and 4000 burners. The standard model fitted is the Landis & Staefa LDU11. (See page 15)

When the burner operating sequence is initiated the burner control box energises the proving system, which then carries out the following checks:

The LDU11 control unit is designed to provide automatic gas valve proving (leakage test) based on the pressure proving principle. The system comprises the control unit, which is fixed to a bracket/terminal box assembly close to the main valve block, and a dual pressure switch which is connected to the test space between the main valves. The unit comes pre-wired as part of the gas train harness.

Gas valve proving is initiated automatically on completion of the burner control circuit prior to burner start-up. The proving test is based upon the 2-stage pressure proving principal. First, the main safety valve (V1) on the upstream side of the gas circuit is tested by evacuating the test space (via the pilot valve V3) and by monitoring the atmospheric pressure in it, then the valves (V2 and V3) on the burner side are tested by pressurising the test space and monitoring the gas pressure. If the pressure increases excessively during the first test phase (TEST 1) or decreases excessively during the second test phase (TEST 2), the control unit inhibits burner start-up and goes to lockout. The lockout reset button lights up and signals a fault.

A programme indicator, which stops whenever a fault is signalled, indicates which valve(s) set is leaking.

The control unit requires to be reset manually, either on the unit itself or by a remote resetting if this has been fitted.

VALVE PROVING SYSTEM : LDU 11

(Standard fitting)

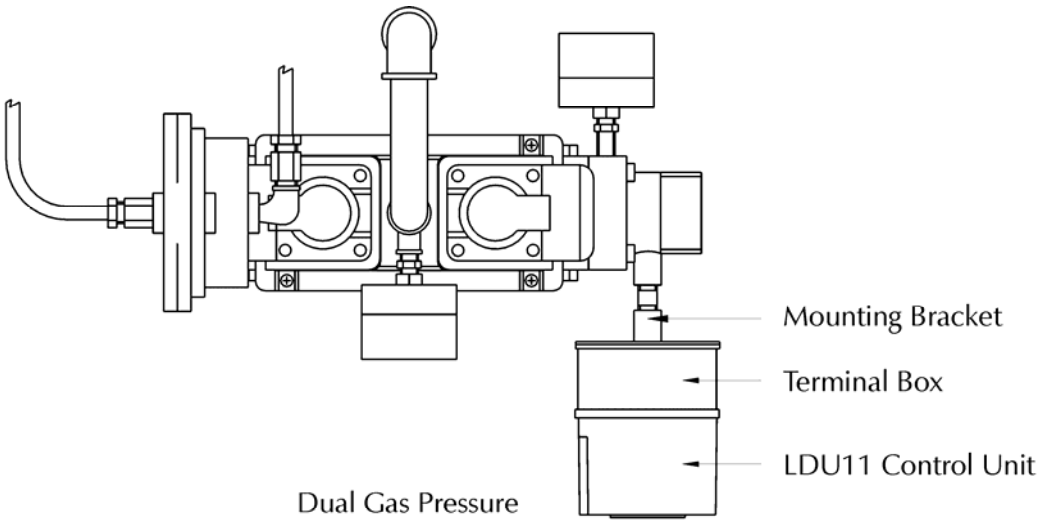

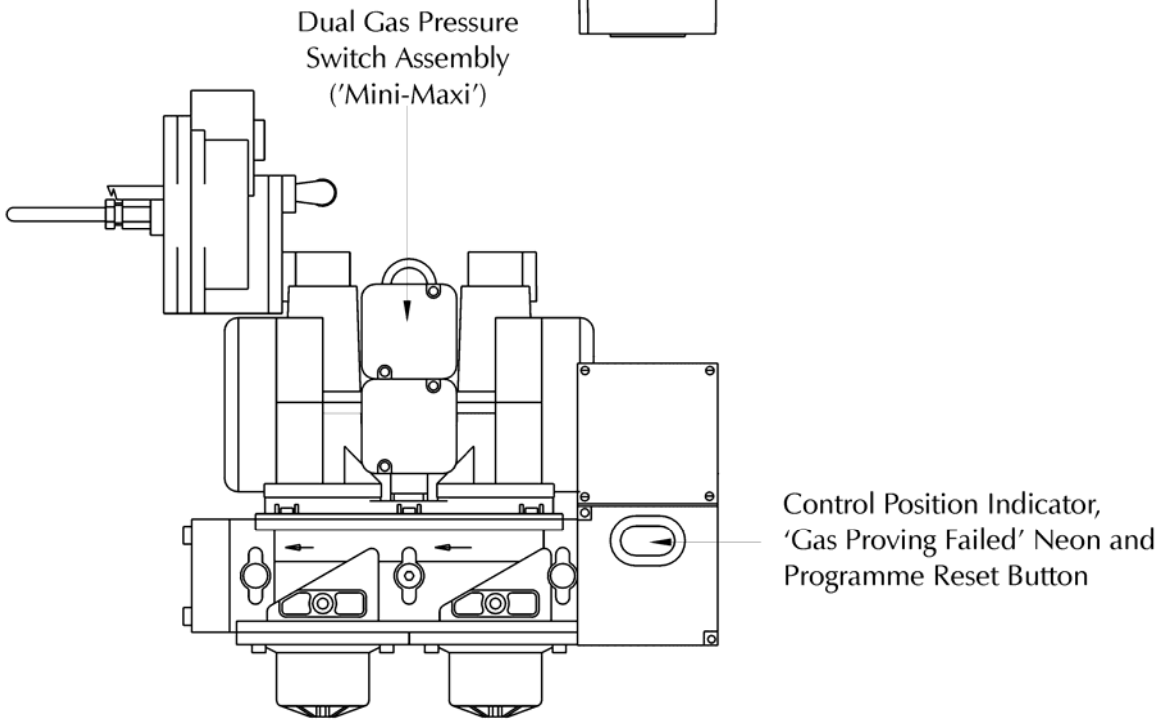

Schematic:

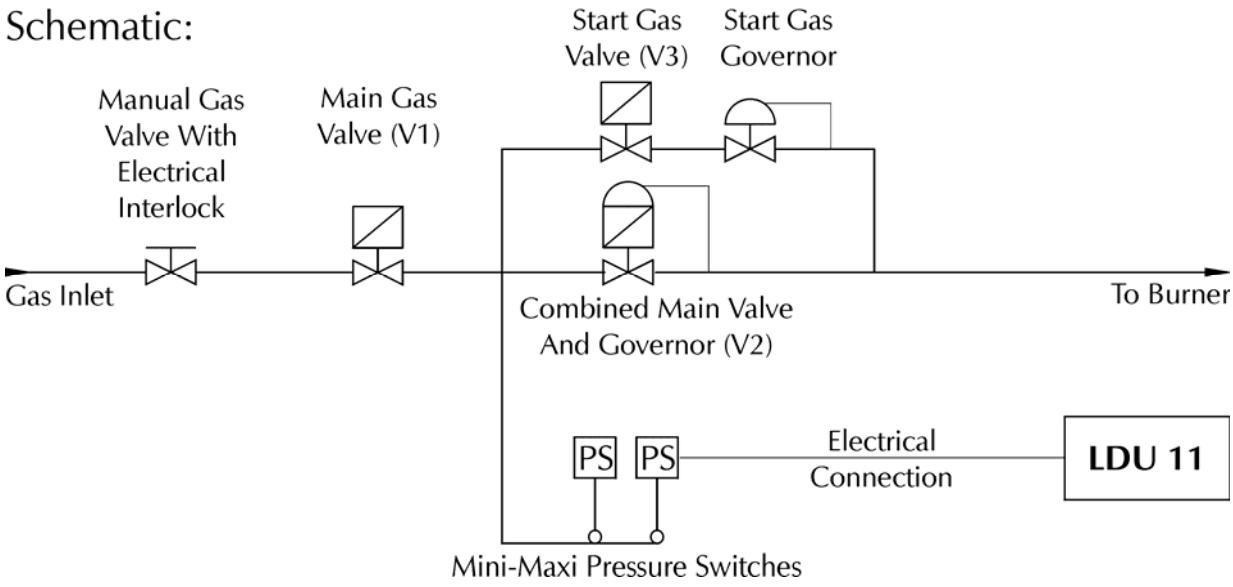

OIL CONTROLS - Single Spill-back Nozzle

The oil control system comprises the burner mounted components and a fuel pump.

Note: When a separate oil pumping set is used it is connected to the burner utilising the braided high pressure hoses supplied. The burner lance incorporates hydraulic tip shut-off for the oil nozzle whilst the system controlling valves are closely mounted at the burner head.

Oil Pumps Fitted: MDFL 3300 - Suntec TA5C
MDFL 4000 - Suntec T2C

Manual Valve
A manual valve is fitted to the output of the fuel pump and must be closed before firing on gas.

Oil Nozzle
MDFL burners use a single oil nozzle (see drg) within the inner assembly (refer to the Appendix).
This nozzle is factory-specified to deliver optimum performance under the specified operating conditions. Any queries regarding the size of the nozzle should be referred to Nu-way.

Fluidics W1 Nozzle

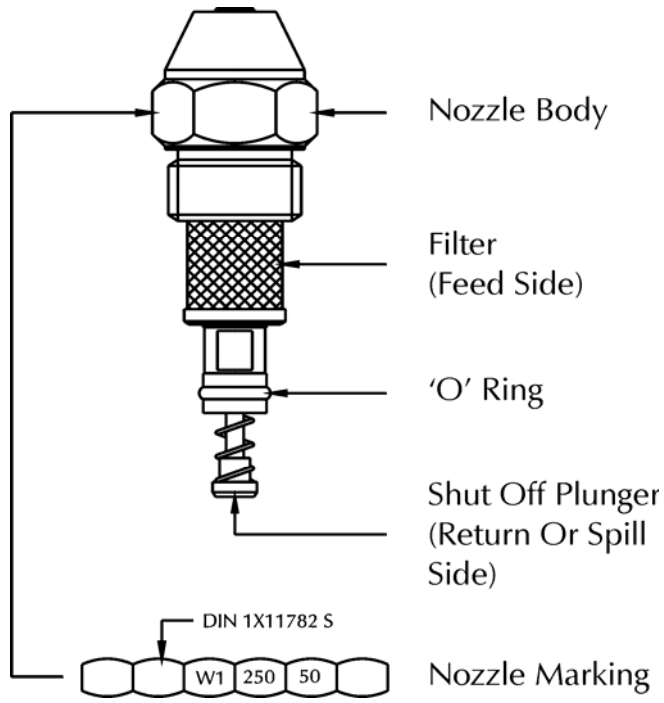

The nozzle is held in position by the inner assembly lance, through which oil flows from the manifold block to the nozzle and recirculated through the spill regulating valve.

Oil Manifold Block
The oil manifold block is located on the left side of the hinged extension. It carries gauges which indicate pump pressure, hydraulic pressure and spill pressure.

Oil Spill Regulating Valve
The oil spill is actuated by the motor which actuates the air damper. It varies the spill pressure in order to provide the required oil flow rate at each operating condition.

Oil Pump
The oil pump is incorporated into a free-standing packaged unit, as shown schematically on page 17. This package includes the oil filters and separation bottle.

OIL PUMPING SET FOR DISTILLATE FUELS

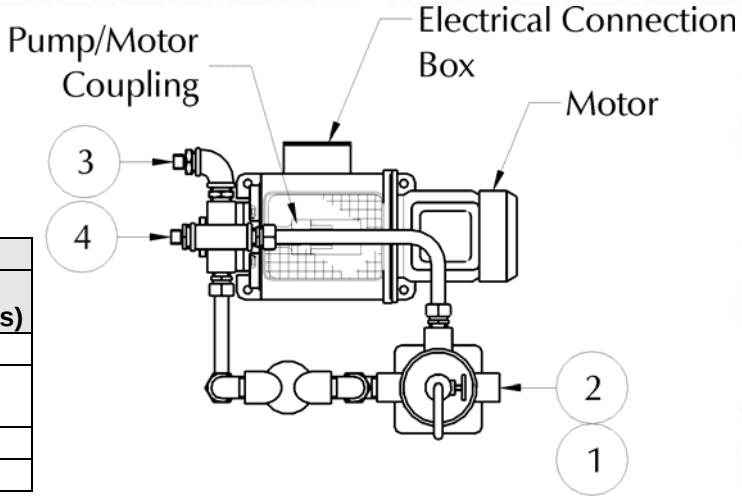

Connection Sizes		
Item	**Description**	**Size (inches)**
1	Main Inlet Connection	1
2	Main Return Connection (Optional)	1
3	Burner Feed	¾
4	Burner Return	¾

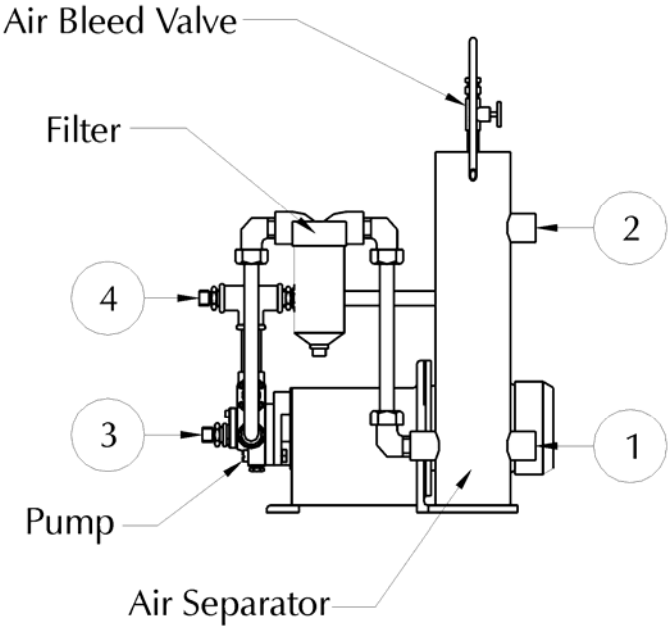

Mounting Arrangement :

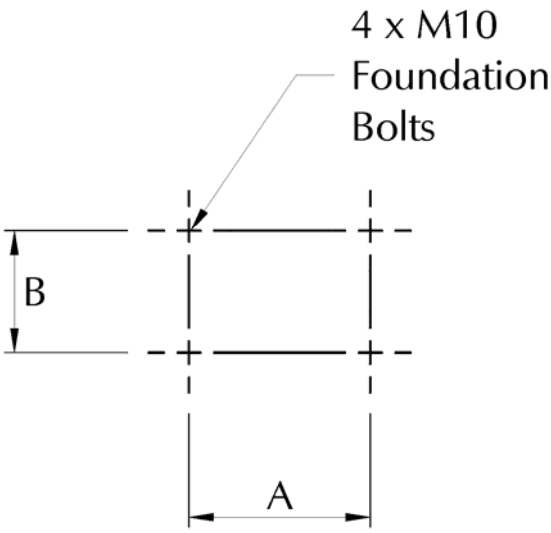

Mounting Dimensions		
Burner Model	**A**	**B**
MDFL 3300 & MDFL 4000	220	194

SUNTEC OIL PUMP IDENTIFICATION AND PORT SIZING

Suntec T Series Oil Pump with TV Pressure Regulator

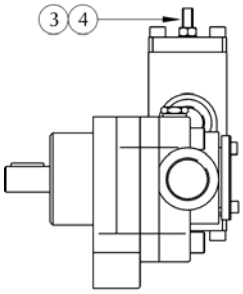

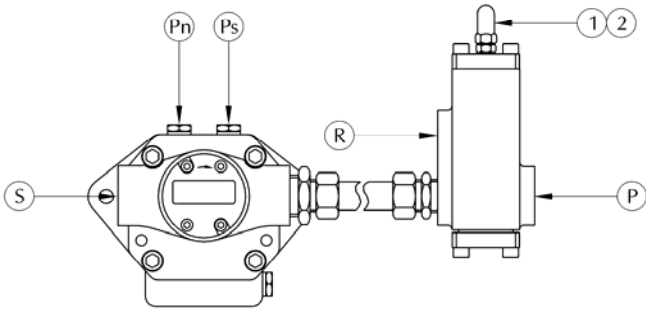

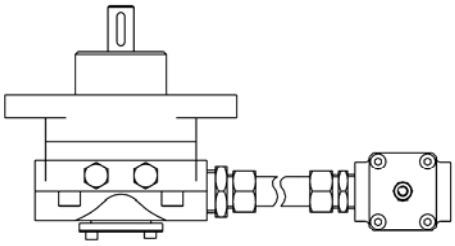

Connection Sizes		
Item	**Description**	**Size**
P	Pressure port	¾”
R	Return port	¾”
S	Suction port	¾”
Pn	Vacuum gauge &	¼”
Ps	Pressure gauge	¼”
1	Regulator cap nut	N/A
2	Washer	
3	Regulator screw	
4	Locknut	

Suntec TA Series Oil Pump

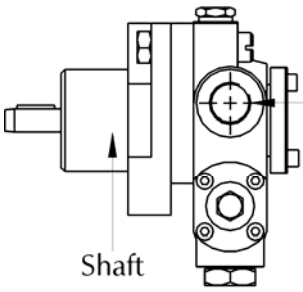

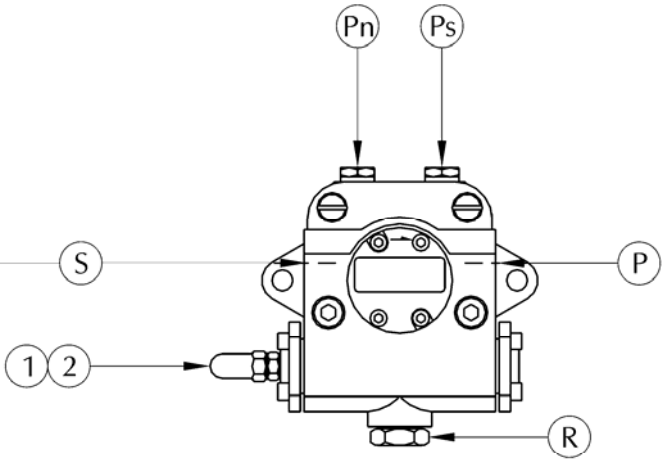

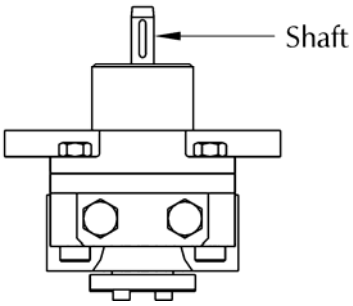

Descriptions and sizing as for Series T pump shown above

OIL CONTROLS : SINGLE SPILL-BACK NOZZLE DISTILLATE OIL BURNERS

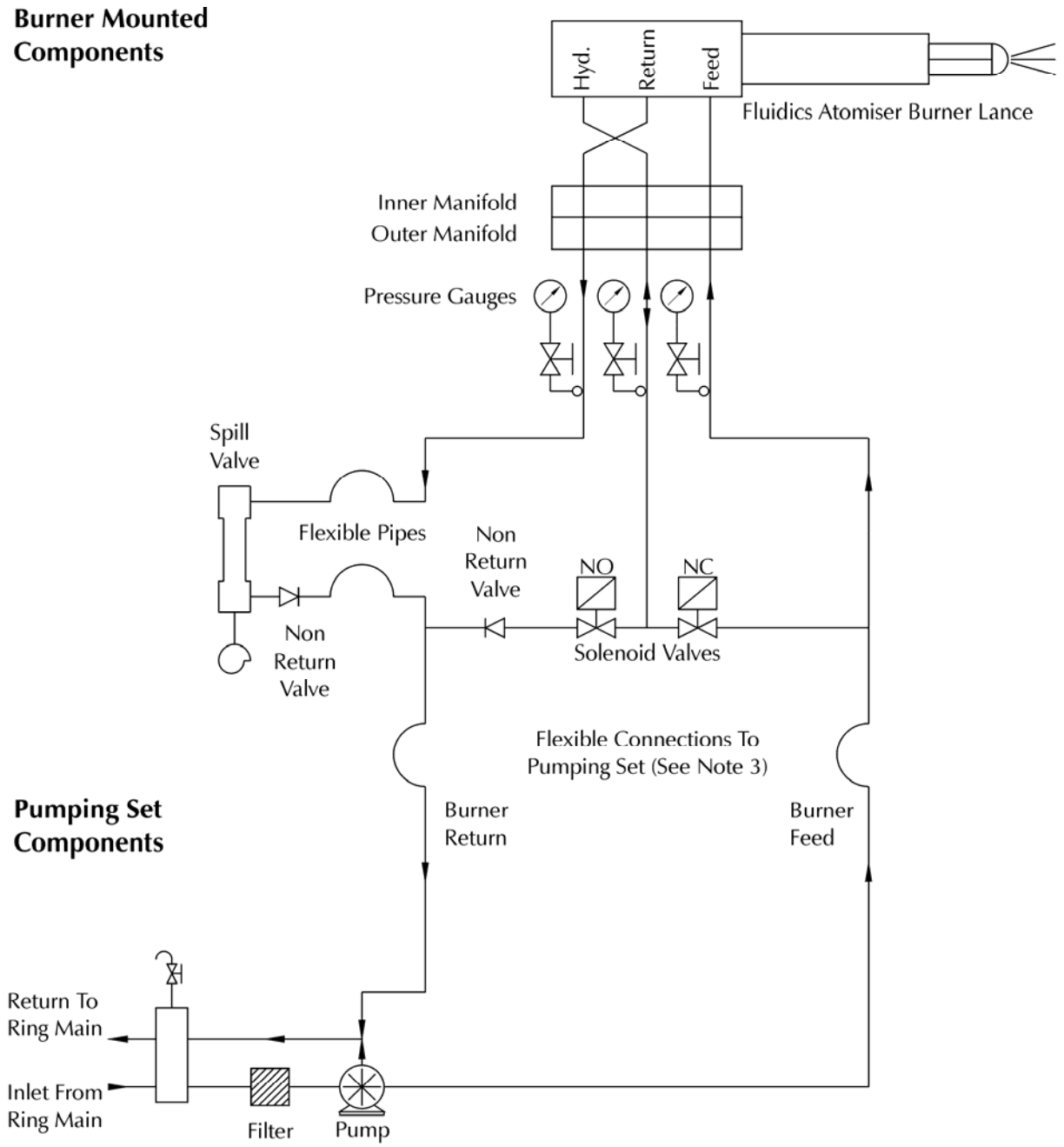

Notes:

1. All interconnecting pipework must have a minimum bore of 19mm (¾") and must be pressure rated for 42 kg/cm^2.

2. Solenoid valves are shown as either NO (normally open) or NC (normally closed).

3. Pipework connections between the burner oil system and the separate pumping set are not supplied by Nu-way. See Note on Page 16.

CONTROL PANEL

On MDFL 3300 and MDFL 4000 burners the enclosure mounted on the left side of the burner serves mainly as a housing for electrical connections, although it also contains the ignition transformers and carries the burner On/Off switch, the Hand/Auto switch, and the Inching switch required by modulating burners.

If supplied, the separate free-standing panel contains the programming burner controller, contactors and other items. This enclosure carries an amber light which indicates “BURNER ON”, and a red light which is illuminated when the burner stops as a result of “EXCESS TEMPERATURE/PRESSURE” in the appliance.

Also located on this enclosure are the fuel selector switch and two additional neon lights. The amber light is illuminated when “OIL” is the chosen fuel and the red light indicates that “GAS” has been selected.

Burner Controller

The burner controller, together with the flame monitor (see below), provide a safe light-up and shutdown sequence for the burner.

The Siemens LFL1.333 (shown on page 21) is fitted as standard.

The burners are fitted with a continuous flame supervision system which uses an ultraviolet (UV) cell and amplifier (incorporated within the burner controller) to detect the presence of the flame.

Modulating Controller

The Siemens RWF 40 (see page 35) is fitted as standard to all fully modulating burners.

BURNER CONTROLLER : SIEMENS LFL 1

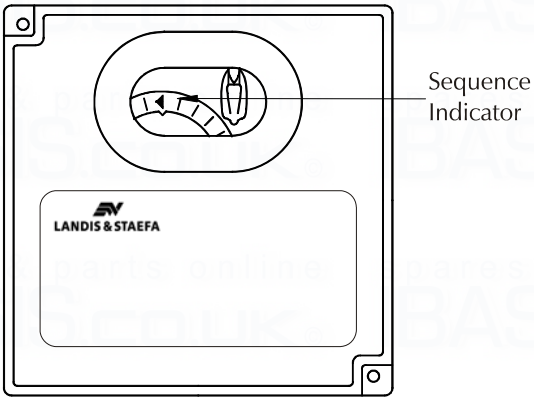

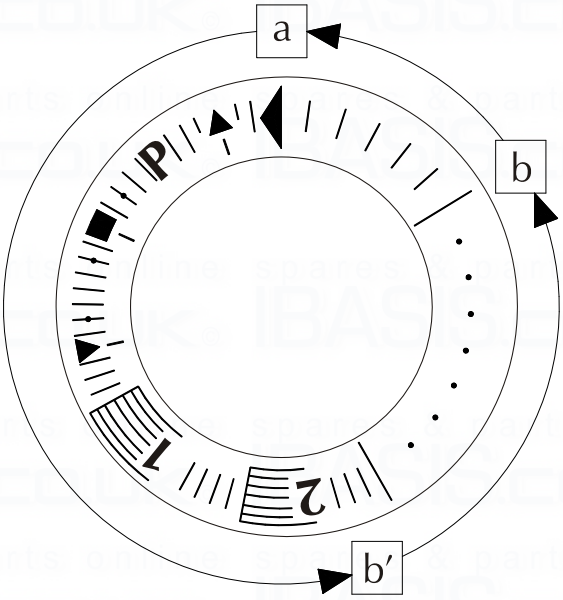

Enlarged Detail of Sequence Indicator

In the event of a fault condition the sequence disc stops rotating, with the symbol appearing above the indicator mark indicating the nature of the fault.

If the fault leads to a lockout condition the orange lockout indicator will be illuminated.

Failure of one or more of the pre-start checks interrupts the start-up procedure.

Symbol	Lockout	Fault
◖	No	Before allowing the sequence to begin the unit carries out the following checks: • Burner Controller not in lockout position. • Air Damper closed (proved by limit switch supplying voltage from terminal 11 to terminal 8). • Fuel Valves closed (proved by limit switch supplying voltage to terminal 12) • Air Pressure Switch indicating ‘no air’ (proved by voltage present on terminal 4). • Fuel Gas Pressure Switch, Limit Thermostat or Limit Pressure Switch all closed (proved by continuity between terminals 4 and 5).
▲	No	Interruption to sequence whilst controller waits for the air damper to drive to open position (proved by servo motor limit switch).
P	Yes	Lockout caused by the failure of the air pressure switch to changeover from the ‘no air’ position shortly after the start of the pre-purge.
■	Yes	Lockout caused by a fault in the flame supervision circuit.
▼	No	Interruption to sequence whilst controller waits for the air damper to drive to start position (proved by servo motor limit switch).
None	Yes	Lockout during the pre-ignition period not marked by a symbol is usually caused by premature flame signal.
1	Yes	Lockout caused by the absence of a flame signal at the end of the first safety period (time for start flame establishment).
2	Yes	Lockout caused by the absence of a flame signal at the end of the second safety period (time for main flame establishment).
I	Yes	Lockout caused by the loss of the flame signal during normal operation.
◖	Yes	Lockout caused by flame signal (either real or due to extraneous light) or flame supervision circuit fault after completion of shutdown.

BURNER OPERATING SEQUENCE

The MDFL burner operating sequence (refer to the controller sequence table below) begins with a pre-purge period on full air. When gas is selected, the fuel is then supplied to the burner at start rate and ignition initiated. Start gas flame proving is followed by establishment of the main flame.

When oil is selected, on completion of the pre-purge period the appropriate oil valve or valves open, ignition is initiated and the flame is established.

In both cases, the burner controller will then continue to its normal operating position and the operation of the burner will be controlled by the pressure and/or temperature requirements of the appliance.

Time (seconds)	LFL 1.333	Description
T1	40	Pre-purge
T2	6	Pre-ignition
T3	3	Safety lockout time
T4	Not applicable to two-stage or fully modulating operation	Delay start rate to main flame – single stage
T5	12	Delay start rate to main flame – multi-stage
T6	12	Delay between main flame low & main flame high (two-stage burners)
T7	18	Post-purge
T8	12	Air pressure switch interlock
T9	91	Total start time
T total	106	Total controller cycle time

Note: The pre-purge times shown refer to the control box only. The time taken for the air damper to move to the appropriate position will extend the total purge time up to a maximum of 157 seconds, depending on the firing rate and air requirements of the appliance.

MODULATING CONTROLS

Controller

The standard method of operation is based on the Landis & Staefa RWF40 Universal Controller, which has been designed for use on gas fired installation, where it provides temperature or pressure control of modulating burners with continuously adjustable fuel throughput.

The control output of the RWF40 is a potential free 3-position switch, which is used for the control of reversible motors. The control signals for the open (Y1) and closed (Y2) are indicated on the controller face by light emitting diodes.

When the boiler control calls for heat, the modulating servomotor will travel to the high flame position and interlock the control circuit. An air pre-purge will take place at this position for a predetermined period, at the end of which the burner sequence controller will stop until the modulating servomotor has travelled to the low flame position and interlocked the control circuit again. The sequence controller will now recommence its operational cycle and the burner will light and remain at low flame until the high flame release signal is given by the sequence controller.

The modulating servomotor will now move to high flame and remain at this position until the desired boiler temperature/pressure is attained. From this stage the modulating unit will commence to move towards the low flame position but, depending on the temperature/pressure, will stop in any intermediate position between low and high flame.

Commissioning Controls

Two switches, Hand/Auto and Inching, are included in the burner panel. In auto mode the burner will respond to the demand of the boiler via the RWF40 modulating controller. In Hand mode the RWF40 controller is disconnected from the burner modulating servo. This servo can now be 'inched' towards high or low flame by operating the 3-position bias inching switch, thus allowing combustion settings to be made at these points. Whilst in Hand mode, care must be exercised when the burner is in a high firing range so that the boiler demand is not exceeded. It is imperative that the burner control circuit operating and limiting instruments are fitted and functioning correctly.

Temperature Detector

The immersion temperature detector type QAE20.1 is used in all hot water boiler applications. The detector has a plastic casing to IP42 with a snap-on cover and an immersion stem. The connection terminals can be accessed after removal of the cover. Cable entry is made via a cable entry gland. In all applications an immersion pocket with a flat seal is supplied.

The detector should be installed in an elbow such that the pocket points against the direction of flow. With all detector versions, the immersion length must be a minimum of 60mm.

Pressure Detector

The pressure detector type QBE620 is used in all steam boiler applications. The detector has a plastic casing to IP42. It is necessary to mount the water trap pipe supplied.

General

The detector must not be covered by lagging.

Mounting instructions are printed on the packing.

COMMISSIONING : GENERAL

Safety

it is essential that commissioning shall be undertaken only by suitable qualified personnel. In the case of MDFL burners, commissioning engineers should be experienced in commissioning forced draught oil and gas burners.

In the UK, it is a legal requirement that anyone working on gas installations, as defined in the "Gas Safety (Installation and Use) Regulations 1994", is CORGI registered.

Nu-way can accept no responsibility for consequential loss, damage or injury which results from a failure to follow the commissioning instructions provided or from commissioning procedures being undertaken by unqualified personnel.

In an Emergency

MDFL burners are designed and constructed to meet all essential requirements of the Gas Appliance Directive 90/396/EEC.

When used in accordance with the instructions provided, MDFL burners are unlikely to produce a hazardous condition. If. however, such a condition should arise in connection with the burner, the appliance or any instrument, machine or service in the vicinity of the burner, the FUEL AND ELECTRICITY SUPPLIES SHALL BE ISOLATED IMMEDIATELY and they shall remain isolated until the fault has been identified and rectified.

Inspection

Before commissioning begins it is important to:

1. Check that the electrical wiring is complete and complies with all applicable Codes and Standards.
2. Ensure that the fuses are fitted and of the correct ratings.
3. Check electrical earthing.
4. Verify that the gas and oil supply pipework is correctly sized and it has been checked for leakage.
5. Ensure that the manual gas isolation valve at the inlet to the gas train and the ball valve on the oil line are operable, fully closed and leak tight.
6. Make all personnel involved in the commissioning aware of the location of the emergency gas, oil and electricity isolation points.
7. Check that fittings such as purge and test points are available.
8. Establish that the application is in an appropriate and safe condition to be fired, for example, that there is water in the boiler.
9. Set the appliance controls to call for heat. Check the appliance's ventilation and flueing arrangements.
10. Ensure that any warning notices appropriate to the commissioning procedure are in position.
11. Ensure that all necessary tools and test equipment are available and ready for use. Essential items include a manometer or other approved pressure measuring equipment, means (which may be permanently installed or provided specifically for commissioning) of measuring flow rates of oil and gas, equipment for checking the smoke number of the flue products and a means of analysing the flue products for carbon dioxide (CO_2), oxygen (O_2), and carbon monoxide (CO).

Inspection (cont..)

12. Check that all relevant documentation is available, including, where appropriate:
    - The agreed plant performance specification
    - Plant drawings and pipework layouts
    - Certificates confirming satisfactory completion of procedures such as soundness testing, purging and electrical safety tests.
    - Commissioning, operating, emergency shutdown and maintenance instructions for the plant.

13. Establish that the operation of plant other than that being commissioned will not have an adverse effect on the operation of the plant to be commissioned, and similarly, that the operation of the plant to be commissioned will not have an adverse effect on other plant.

14. Confirm that the operation of adjacent plant and machinery will not constitute a hazard to the personnel involved in commissioning.

Initial Settings

To prepare the burner for commissioning on oil and gas:

1. Remove the cover from the air damper motor and check the cam positions referring to the appropriate diagram shown on page 11. Adjust if necessary.

2. Remove the small plate on top of the governor section of the air/gas ratio controller. Referring to the diagram on page 13, set the air/gas ratio on scale (1) to 0.8 by adjusting screw (1), anti-clockwise to increase, clockwise to decrease.
   Set the ratio on the remaining scale to half a division on the positive side of '0' by adjusting screw (2) in the same way, anti-clockwise to increase, clockwise to decrease.

3. Remove the cap from the start gas governor and set the adjusting screw approximately half-way between the maximum and minimum settings, turning the screw clockwise to increase the setting and anti-clockwise to decrease it. Replace the cap.
   Never adjust the governor to its maximum setting.

4. Check, and if necessary, re-set the ignition electrode gaps to 2.5 – 3mm. Access to the burner head is explained on page 42.

5. Ensure that oil of the correct class is available at the required temperature (on MDFR systems refer to the table on page 7) and pressure.

IT IS RECOMMENDED THAT THE BURNER SHOULD BE COMMISSIONED FOR OIL FIRING IN THE FIRST INSTANCE. SHOULD OIL NOT BE AVAILABLE TO THE BURNER THEN GAS COMMISSIONING CAN PROCEED ONLY IF THE PUMP DRIVE COUPLING IS REMOVED FROM THOSE BURNERS WHERE THE OIL PUMP IS DRIVEN BY THE BURNER FAN MOTOR.

IT MUST BE NOTED IN ALL CASES THAT WHEN OIL IS AVAILABLE TO THE BURNER THE UNIT MUST BE RE-COMMISSIONED ON BOTH FUELS. NOTICE SHOULD BE MADE OF THIS FACT, BOTH AT THE BURNER AND WITHIN THE BURNER HANDBOOK AND APPLIANCE LOG BOOK.

COMMISSIONING : OIL

Burner Dry Run – MDFL 3300 & MDFL 4000

The following procedure should be followed. It is important that a complete and flawless dry run be completed before fuel is supplied to the system:

1. Check that the gas, oil and electrical supplies to the burner are turned off. Turn the fuel selector switch on the control panel to the oil position.

2. Check that the manual gas isolation valve at the inlet to the gas train is closed. Do not close the ball valve at the outlet of the oil pumping set.

3. Ensure that oil is available at the oil pump on the burner at the required pressure and class.

4. Prime the oil pump by opening the bleed port until air-free oil flows from it. The pump should not be rotated automatically until is has been primed as this may lead to premature wear or pump failure.

5. Switch on the electricity supply to the burner and check that the pump rotation is correct to the direction arrows shown on the pump face.

6. Open the manual isolation valve at the outlet of the pumping set.

7. Open the control panel door and set the burner for low flame hold.

8. Set the air pressure switch to minimum.

9. Remove the access lid on the modulating cam box unit.

10. Switch on the burner at the control panel. The modulating unit cam shaft should now rotate to the high flame setting, and the combustion fan motor will start the air pre-purge phase.

11. Allow the fan motor to run up to speed and switch off the burner. Observe the rotation of the combustion air fan motor, which should be anti-clockwise viewed from the motor cowl end. If the direction of rotation of the fan motor is incorrect, refer to the Section of this handbook on Fault Finding.

12. If the fan rotation is correct switch on the burner.

13. The burner will proceed through its pre-purge and ignition sequences. Check that an ignition spark is present. If there is no spark and the burner goes to lockout, the air pressure switch may be at fault – refer to Section on Fault Finding.

14. During this run note the spill and line oil pressures at the point of ignition. Reset the sequence control and repeat the run if necessary to check these functions. If necessary, adjust the line pressure at the burner pump to 27.8 bar (400 psi) and the spill pressures to the correct figures stamped on the burner data plate.

15. Allow the burner to light momentarily. Remove the UV cell to lock out the burner then switch off the electricity supply to the burner.

16. The burner's safety systems have now been proven on oil firing and commissioning can proceed to the next stage.

Burner Live Run – MDFL 3300 & MDFL 4000

The instructions in this section are presented as a continuous sequence. No separate set of actions (for example, checking the flame signal) should be followed in isolation without paying particular attention to any safety precautions such as isolating the electrical supply to the burner which should precede such actions. At all stages, the operation of the burner should be checked against the programming controller sequence table on page 22.

Setting Oil Flow Rates and Air/Fuel Ratios

From this point the oil commissioning process is concerned with setting the high and low fire oil flow rates to appropriate values and ensuring that the combustion quality of the system is within acceptable limits. During this process:

AFTER EACH ADJUSTMENT check the flue gas analysis and oil flow rate.

ALWAYS use approved and calibrated test equipment.

NEVER rely on visual observation of the flame as the only guide to combustion quality.

New MDFL modulating burners are generally supplied against the firing specification of the appliance. In this case the system and spill pressures may be pre-set and require checking and minor adjustments only.

The following section describes how to set up the modulating cam box unit from the beginning. The modulating cam box is shown on page 29.

The modulating cam layshaft can be rotated by hand using the gearbox disengagement lever in the drive servomotor.

1. Ensure that the modulating cam arrangement is in the low flame position.

   Adjust the oil cam (refer to page 29) so that it gives approximately 1.5mm throw (3mm stroke) and lock in position.

2. Check to ensure that the spill valve push rod bears slightly against the oil cam (refer to page 29).

3. Rotate the air cam adjusting thumbscrews in or out so that they give a reasonable amount of adjustment in each direction.

   Adjust the flexible cable (at either end if necessary) until the air inlet damper is fully closed (i.e. until all the slack is taken up on the cable).

4. Adjust the thumbscrews to give a small opening of the air damper at the low flame position.

5. Reset the sequence control and allow the burner to start. Immediately the burner starts, switch the Hand/Auto selector switch to the 'Hand' position and remain at low flame until the appliance is ready to accept high flame. During this period, check and adjust the low flame oil throughput.

6. Observe the flame through the inspection window at the rear of the burner casing to ensure the flame is established around the outer edge of the diffuser plate. A continuous halo should be visible. If the flame is dirty, adjust the air cam thumbscrews until the flame becomes clean.

7. After a suitable delay, inch the cam shaft to the high flame position (i.e. through 180°) by means of the inching switch on the control panel. Adjust the air cam profile by means of the thumbscrews until the air damper is now fully open.

   At this stage it will be found that all of the thumbscrews between low and high position will require adjusting so as to avoid over-stressing the cam profile band. Once this has been done, there should be a fairly smooth profile between low and high flame positions.

8. Ensure that the flame is visually clean throughout the modulation range at all times.

9. Check the oil consumption. If this is not correct for the full burner rating, the oil cam must be adjusted as follows:-
   a. Inch the burner to low flame and note the spill pressure.
   b. To increase the minimum rate, adjust as shown on page 29.
   c. Adjust the cam to give more eccentricity for more oil at high flame, and vice-versa.
   d. Return to the minimum setting and compensate for any changes.
   e. Inch the burner to high flame and again check the oil flow.

   Continue to repeat a to d until the high flame oil rate is correct.
10. When a satisfactory flame is achieved, again check the line and spill pressures.
11. Inch the camshaft back to the low flame position. The oil consumption rate should now be between 40 and 50% of the rated maximum.
12. Sample the flue products and check the smoke number. Adjust the combustion air volume as necessary.
13. Check the burner performance throughout the range, adjusting the air cam profile as necessary to give a clean and efficient flame.

    When a satisfactory setting has been achieved, lock the air cam thumbscrews with the grubscrews fitted in the side face of the cam body. Refit the modulating cam unit access cover.
14. Switch off the burner and the electricity supply to the burner.

MODULATING CAM BOX

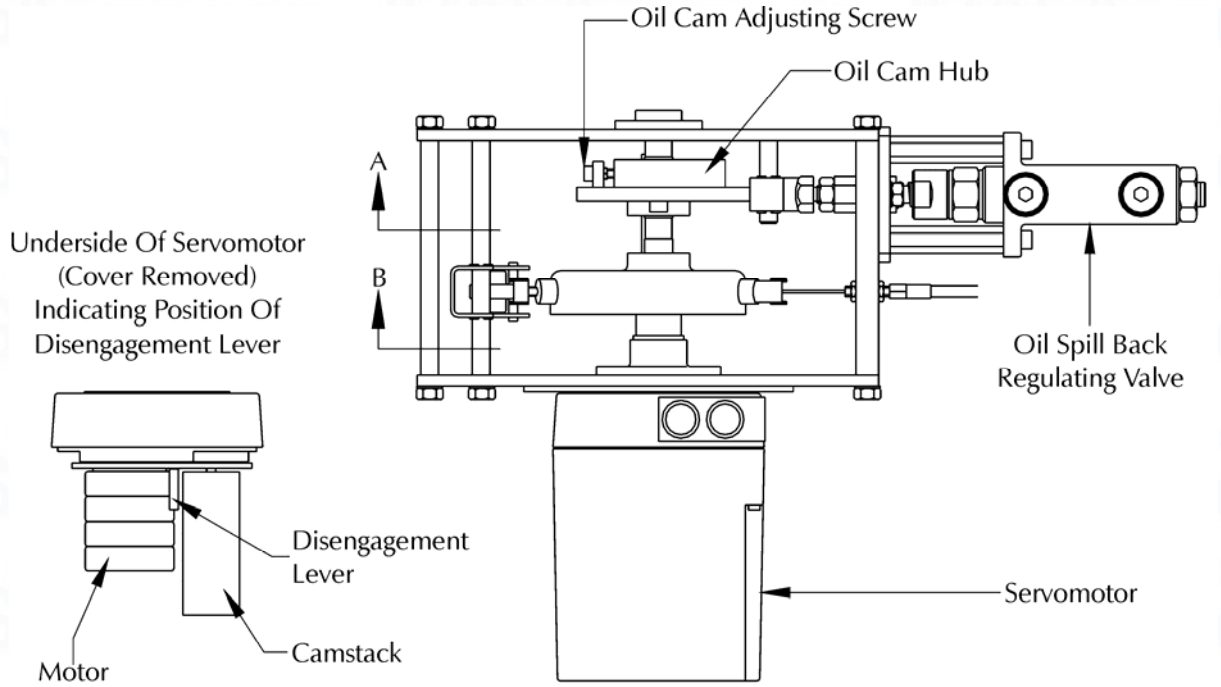

View On 'A' : Oil Cam

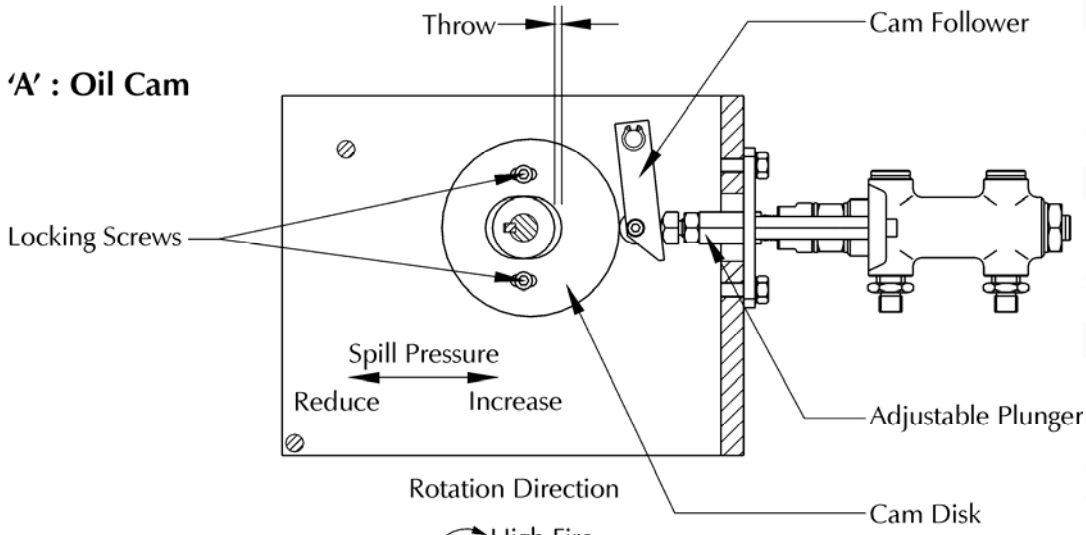

View On 'B' : Air Cam

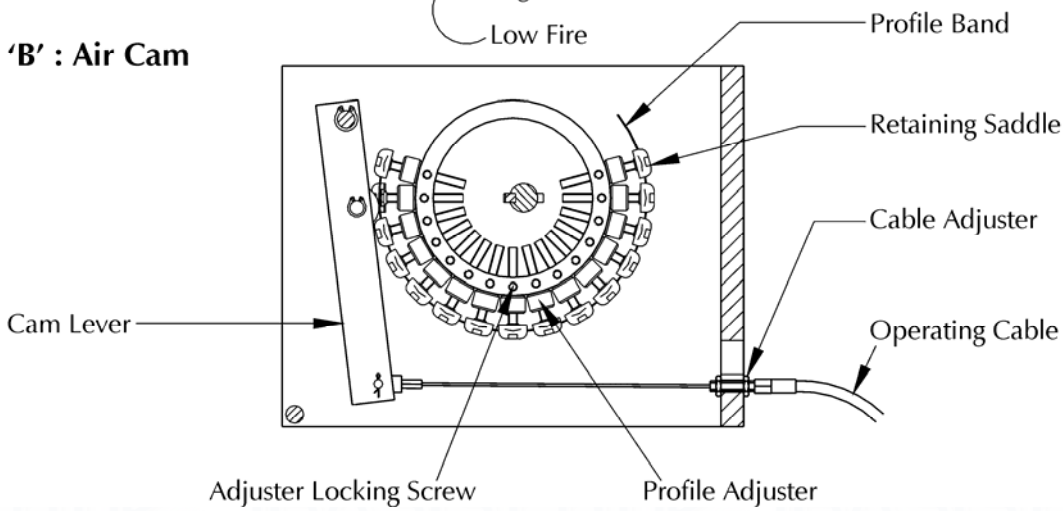

COMMISSIONING : GAS

Burner Dry Run – MDFL 3300 & MDFL 4000

The following procedure should be followed. It is important that complete and flawless dry run be completed before fuel is supplied to the system:

IT IS RECOMMENDED THAT THE BURNER SHOULD BE COMMISSIONED FOR OIL FIRING IN THE FIRST INSTANCE. SHOULD OIL NOT BE AVAILABLE TO THE BURNER THEN GAS COMMISSIONING CAN PROCEED ONLY IF THE PUMP DRIVE COUPLING IS REMOVED FROM THOSE BURNERS WHERE THE OIL PUMP IS DRIVEN BY THE BURNER FAN MOTOR.

IT MUST BE NOTED IN ALL CASES THAT WHEN OIL IS AVAILABLE TO THE BURNER THE UNIT MUST BE RE-COMMISSIONED ON BOTH FUELS. NOTICE SHOULD BE MADE OF THIS FACT, BOTH AT THE BURNER AND WITHIN THE BURNER HANDBOOK AND APPLIANCE LOG BOOK.

Important Note regarding Combustion Air Settings:-

IF THE BURNER HAS ALREADY BEEN COMMISSIONED ON OIL, THE COMBUSTION AIR SETTING MUST NOT BE RE-ADJUSTED. THE GAS RATE MUST BE MATCHED TO THE EXISTING SETTINGS.

1. Check that the gas, oil and electrical power supplies to the burner are turned off. Turn the fuel selector switch on the control panel to the gas position.
2. Check that the manual gas isolation valve at the inlet to the gas train and the ball valve in the oil line are closed.
3. Check that the gas pipework between the plant isolation valve and the safety shut-off valves has been tested for soundness and purged in accordance with an appropriate procedure, for example, IGE/UP/1 “Soundness Testing and Purging on Industrial and Commercial Premises”.
4. Open the control panel cover and set the burner for low flame hold. (On modulating burners not fitted with a low flame hold switch, set the Hand/Auto switch to the “Hand” position).
5. If a gas booster is fitted, ensure that it is turned on.
6. Remove the cover from the low gas pressure switch and fit a temporary link between terminals 2 and 3. Replace the cover.
7. Set the air pressure switch to minimum.
8. Establish the electrical supply to the burner and momentarily switch on the burner. Observe the rotation of the combustion air fan motor, which should be anti-clockwise viewed from the motor end. If the direction of rotation of the fan motor is incorrect refer to the Section of this handbook on Fault Finding.
9. If the fan rotation is correct switch on the burner.
10. The burner motor will begin to run:
    a. Immediately if the system was switched off during normal operation.
    b. On pressing the reset button on the control box.

    If at this stage the burner goes to lockout, refer to the Section on Fault Finding.
11. The burner will proceed through its ignition sequence. Check that an ignition spark is present. If there is no spark and the burner goes to lockout the air pressure switch may require adjustment – refer to the Section on Fault Finding.
12. The ignition spark will cease and the system will go to lockout. Switch off the burner and the electrical power supply to the burner.
13. Switch off the gas booster (if fitted). Remove the temporary link fitted to the low gas pressure switch and replace the cover.
14. The burner’s safety systems have now been proven and commissioning can proceed to the next stage.

Burner Live Run – MDFL 3300 & MDFL 4000

The instructions in this section are presented as a continuous sequence. No separate set of actions (for example, checking the flame signal) should be followed in isolation without paying particular attention to any safety precautions such as isolating the electrical supply to the burner which should precede such actions. At all stages, the operation of the burner should be checked against the programming controller sequence table on page 22.

Before proceeding, check again that:

1. The electrical wiring is complete and complies with all relevant Codes and Standards.
2. All fuses are fitted and are of the correct ratings.
3. The gas and oil supply pipework is correctly installed and has been leak tested. If, at any time during commissioning, there is a SMELL OF GAS the gas and electricity supplies must be isolated and the leak sealed before proceeding.
4. The appliance is in an appropriate and safe condition to be fired.
5. The appliance controls are set to call for heat.

Selecting Gas

1. Ensure that the ball valve in the oil line is closed.
2. Turn the fuel selector switch on the control panel to the gas position.

Gas Supply Pressure

The supply pressure at the inlet to the burner shall not be less than that required for the maximum required continuous output from the burner and not more than 200 mbar.

Before proceeding with commissioning:

1. Fit a manometer or other approved pressure measuring instrument to the pressure test point on the upstream side of the first safety shut-off valve.
2. Open the manual gas isolation valve at the inlet to the gas train.
3. Check that the gas pressure is adequate.

Establishing the Start Gas Flame

1. Remove the control panel cover and remove the pilot check link. Replace the cover.
2. Establish the electrical supply to the burner and switch on the burner.
3. The burner controller will run through its sequence, initiating the ignition spark and opening the start gas safety shut-off valve.
4. The start gas flame will be established and the UV cell will begin monitoring. The burner will operate continuously at start gas rate. If the burner goes to lockout, increase the start gas rate slightly at the governor and reset the burner.
5. Confirm the leak tightness of the pipework downstream of the start gas safety shut-off valve using a proprietary detection fluid. **** See Note on Page 33.**
6. Switch off the burner. Switch on the burner and allow the ignition sequence to be repeated, confirming the start gas flame is reliable.
7. Switch off the burner and the electrical power supply to the burner. Remove the control panel cover and replace the pilot check link. Replace the cover.

Setting Main Flame Rates and Air/Gas Ratios

From this point the gas commissioning process is concerned with setting the main and start gas flow rates to appropriate values and ensuring that the combustion quality of the system is within acceptable limits. During this process:

AFTER EACH ADJUSTMENT check the flue gas analysis and gas flow rate.

ALWAYS use approved and calibrated test equipment.

NEVER rely on visual observation of the flame as the only guide to combustion quality.

1. Fit a manometer or other approved pressure measuring instrument to the gas pressure test point nearest to the burner head. The relationship between the pressure at this point and burner heat input is shown in the graphs in the Appendix. This information is provided only as a guide and it should not be used in conjunction with pressure measurements as a substitute for accurate measurement of gas flow rate, for example, a gas meter.
2. Ensure that the flue gas analysis equipment is functioning.
3. Close the manual gas isolation valve at the inlet to the gas train to an opening of approximately 20%.
4. Set the gas inlet pressure switch to its minimum value.
5. With the burner set for low flame hold (hand operation), re-establish the electrical supply and switch on the burner.
6. The burner controller will run through its sequence, initiating the ignition spark and opening the start gas safety shut-off valve. The start gas flame will be established and the UV cell will begin monitoring.
7. The main gas control valve will open and low fire will be established. Open the upstream manual valve slowly until it is fully open, observing the CO level.
8. If the CO level is too high (see below) reset the low fire adjusting screw (2) on the air/gas ratio controller (refer to the diagram on page 13) until an acceptable figure is achieved. In extreme cases the adjustment on screw (2) may be exhausted without achieving an acceptable CO level. In this event, reset the high fire adjusting screw (1) until an acceptable CO level is achieved.
9. Confirm the leak tightness of the pipework downstream of the main gas safety shut-off valve using a proprietary detection fluid.
10. Switch off the burner and the electrical power supply to the burner.
11. Open the control panel cover and switch the burner from low flame hold to normal run position. On modulating and sliding high/low burners select the ‘Auto’ position of the Hand/Auto switch. Close the cover.
12. Establish the electrical supply to the burner and switch on the burner. The burner controller will run through its sequence. Low fire will be established, expanding to main flame. Monitor the flame visually during the transition from low to high fire. If the flame becomes more intense and compact this indicates an excess of combustion air. If the flame becomes too large and shapeless, this indicates an excess of fuel. Either condition is acceptable at this stage provided that the flame is stable and the commissioning process continues immediately. If in doubt, switch off the burner and adjust screw (1) on the air/gas ratio controller appropriately before restarting the burner.
13. With the burner running on high fire, measure the flue CO_2 level and adjust screw (1) to bring the level to an acceptable level. Note that at this stage the burner may be overfiring the appliance and producing excessively high levels of CO. Check the level of O_2 to confirm the CO_2 reading.
14. Set the burner for low flame and hold (‘Hand’ operation) and switch on the burner. Allow the burner controller to run through its cycle until the burner is running on low fire.
15. Adjust the low fire adjusting screw (2) to bring the CO_2 level to an acceptable level.

16. Changing the low fire setting on the air/gas ratio controller will have a slight effect on the high fire setting. It may therefore be necessary to repeat steps 13 to 15 several times in order to achieve acceptable levels of CO_2 at both firing rates.
17. With the burner running on high fire, check the gas flow rate with an appropriate instrument, ensuring that the instrument has been calibrated before use. If the flow rate is to be measured using the main site gas meter or a supplementary meter ensure that all other gas appliances served by that meter are isolated.
18. Check the gas flow rate with the burner running on low fire. The appropriate low fire rate is governed by the low fire combustion air setting achieved during the oil commissioning phase. The turndown between high and low fire should therefore mirror the figure achieved during this phase. If oil is unavailable and the burner is commissioned for gas firing only, then the gas rate can be adjusted by varying the low and high fire positions of the air damper. In this case care should be taken not to exceed the limits of the burner performance envelope shown in the Appendix.
19. Analyse the flue products on both high and low fire.

Setting the Start Gas Rate

**** Warning:**
Extended firing on start gas rate only can lead to a build-up of volatile gases within the appliance combustion chamber. Running should be kept to maximum of 5 MINUTES ONLY.

1. Switch off the burner and the electrical power supply to the burner.
2. Remove the control panel cover and remove the pilot check link. Replace the cover.
3. Establish the electrical supply to the burner and switch on the burner. Allow the burner to light and establish the start gas flame.
4. Check the gas flow rate. The appropriate setting is usually found between 25 and 30% of the main flame gas rate. The start gas rate must never be set at a higher level than 33%.
5. If it is necessary to adjust the start gas rate, turn the adjusting screw in the start gas pressure governor clockwise to increase the gas rate and anti-clockwise to reduce it. Make small adjustments and check the gas rate after each change.
6. Switch off the burner and electrical power supply to the burner. Remove the control panel cover and replace the pilot check link. Replace the cover.

Setting the High Gas Pressure Switch

1. Remove the cover from the high gas pressure switch.
2. Establish the electrical supply to the burner and switch on the burner. Allow the burner to proceed through its operating sequence until it is operating on high fire.
3. Turn the adjusting dial on the pressure switch anti-clockwise slowly until the switch trips. The pressure switch indicating light will be illuminated at the completion of the shutdown cycle.
4. Turn the adjusting dial approximately 20% clockwise.
5. Refit the cover and reset the pressure switch by pressing the button on the cover. The burner will restart.

Setting the Low Gas Pressure Switch

1. Switch off the burner and the electrical power supply to the burner.
2. Remove the cover from the low gas pressure switch.
3. Establish the electrical supply to the burner and switch on the burner. Allow the burner to proceed through its operating sequence until it is operating on high fire.
4. Turn the adjusting dial on the pressure switch clockwise one small step at a time until the switch trips, causing the burner to shut down. Turn the adjusting dial anti-clockwise until main flame can be established.

FINAL COMMISSIONING STAGE – OIL AND GAS

Checking the Flame Signal

1. Remove the control panel cover and disconnect the flame signal check link.
2. Connect a DC micro-ammeter across the terminals.
3. Establish the electrical supply to the burner and switch on the burner. Allow the burner to light and operate normally.
4. Observe the reading on the ammeter at all firing levels including start gas. A steady reading in excess of 7 microamps is satisfactory. Lower readings may cause intermittent burner lockout and indicate a need for adjustment of the burner settings – refer to the Section of Fault Finding.
5. Switch off the burner and the electrical power supply to the burner. Disconnect the ammeter and replace the flame signal check link. Replace the control panel cover.

Setting the Air Pressure Switch

1. Remove the air pressure switch cover.
2. Fit a manometer or other approved pressure measuring instrument to the pressure switch to enable a comparison to be made between the pressure switch indicator and the measured pressure, if required.
3. Remove the control panel cover and remove the low fire hold link. Replace the cover.
4. Establish the electrical supply to the burner and switch on the burner. Allow the burner to proceed through its sequence until it is operating on low fire.
5. Increase the pressure switch setting slowly until the flame is extinguished and the burner goes to lockout.
6. Turn the dial down one division and reset the burner. If lockout occurs again, turn the dial down a further division and reset the burner. Repeat this process until the burner lights and runs satisfactorily.
7. Turn the adjusting dial down a further two divisions.
8. Switch off the burner and the electrical power supply to the burner. Remove the manometer, if fitted. Replace the pressure switch cover.
9. Remove the control panel cover and replace the low fire hold link. Replace the cover.

Modulating Control : Siemens RWF 40

Basic display

The diagram below shows the RWF40 after switching on the supply voltage. This conditions is called the basic display. The actual valve and the currently active set-pint are shown here. Manual operation, self-optimisation, the operating parameter and configuration levels can be activated from here.

To change the working set point

The operating display shows the actual pressure/temperature of the boiler in red and the required set point pressure/temperature beneath in smaller green digits. One quick press of the PGM button, the display changes to show the set point as the larger red digits and the SPI in the lower small green digits.

Alter the red display using the up/down buttons to show the new required set point, press exit or let the unit time out to return to the basic display which should be the new set point figure.

To enter a new parameter

The parameters dictate the way in which the burner firing rate alters in response to changes in the pressure/temperature of the boiler.

A major factor that determines the need to change the parameters is if the burner is fitted to a steam or hot water boiler. The table below indicates the parameter and its setting for steam and hot water boilers. It must be emphasised that it is only an indication and any departure from these settings should be made in small increments, with time given to see how the burner is reacting to the changed parameter.

Press and hold the PGM button down until the green set point figure changes to an AL, the larger upper figures show the value. Use the up/down buttons to set the new values, press the PGM button to enter the value and change to the next screen. To cancel an entry press exit. Scroll through the screens, (PGM button) modifying any value found to be in error (up/down buttons). At the last screen the PGM button will return the controller to the original display.

At any point in the procedure the original operating display can be obtained by letting the unit time out, the value in the display at the time out will be accepted.

A value can only be altered within the permitted range of that parameter. All other parameters must remain as supplied.

Note: The detector range parameters SCL & SCH are given as °C for Hot Water (temperature) and bar for Steam (pressure).

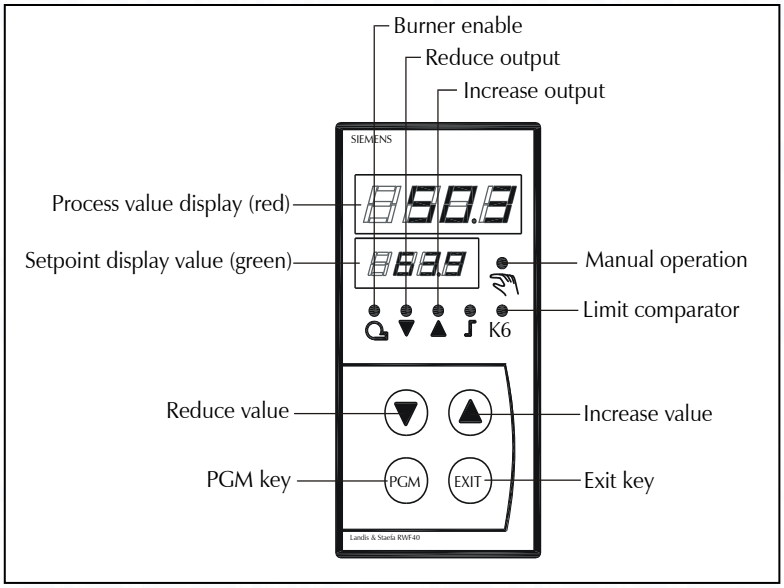

RWF Recommended Settings			
Parameter	**Display**	**Hot Water**	**Steam**
Proportional band	Pb1	10	1
Derivative time	Dt	10	5
Reset time	Rt	50	20
Actuator time	Tt	Set to the air Damper running time between low and high flame	
Switch on threshold	Hys 1	0	0
Upper off threshold	Hyst 3	99.9	999.9
Detector: range start	SCL	0	0
Detector: range end	SCH	100	25

Final Checks

1. Check that all covers have been replaced and that all locking devices are secure.

2. Check the operation of the appliance control instruments and safety interlocks.

3. Ensure that the appliance safety controls and any other interlocks are set to safe limits.

4. **COMMISSIONING IS NOW COMPLETE.**

5. Establish the electrical supply to the burner and switch on the burner. Allow the burner to proceed through its operating sequence until it is operating on high fire. The burner will now operate normally until:
   a. It is switched off by the appliance controls.
   b. It is switched off manually.
   c. There is an electrical power failure. In this event the burner will restart and run normally when power is restored. No manual intervention is required.

On Completing Commissioning

When commissioning has been completed satisfactorily the commissioning engineer shall prepare a report, which shall contain the following:

1. Details of any modifications made to the system, together with revised drawings if necessary.

2. Customer and plant details, including any serial numbers.

3. Operating levels and settings, including flue gas analysis information.

This report shall be passed to the person responsible for the plant. This responsible person shall ensure that:

1. All personnel concerned with operating, supervising and maintaining the plant receive instruction covering:
   - The way in which the plant operates and the locations and functions of the plants safety systems.
   - The correct light-up and shutdown procedures.
   - Adjustment of operating variables.
   - Checking of plant interlocks.
   - The plant's maintenance requirements.
   - The actions to be taken in the event of a fault condition.

2. Clear light-up and shutdown procedures are displayed on the plant and that the pipes, valves and switches involved are clearly marked.

3. **CLEAR AND CONCISE EMERGENCY SHUTDOWN PROCEDURES ARE DISPLAYED.**

FUEL CHANGEOVER PROCEDURE

Note that on completion of the commissioning procedure detailed above the burner is set for gas firing. The procedure to be followed when switching fuels during normal operation is as follows:

Switching from Gas to Oil

1. Switch off the burner and the electrical power supply to the burner.
2. Close the manual gas isolation valve.
3. Open the ball valve in the oil line.
4. Turn the fuel selector switch on the control panel to the oil position.
5. If the burner has been operated on gas for a prolonged period, it may be necessary to refit the burner oil pump coupling and re-prime the pump.
6. Establish the electrical supply to the burner and switch on the burner. Allow the burner to proceed through its operating sequence until it is operating on high fire.

Switching from Oil to Gas

1. Switch off the burner and the electrical power supply to the burner.
2. Close the ball valve in the oil line.
3. Open the manual gas isolation valve.
4. Turn the fuel selector switch on the control panel to gas position.
5. Establish the electrical supply to the burner and switch on the burner. Allow the burner to proceed through its operating sequence until it is operating on high fire. If the burner has been operating on oil for a prolonged period it may be necessary to purge the gas line of air.
6. If the burner is to be operated with gas for a prolonged period, it may be desirable to remove the oil pump couplings.

ROUTINE SAFETY CHECKS

THESE CHECKS SHOULD BE CARRIED OUT ONLY APPROPRIATELY QUALIFIED AND EXPERIENCED PERSONNEL.

Combustion Air

Check that the plant room is well ventilated at all times and inspect the burner air inlet frequently to ensure that there is no obstruction to the air flow.

Flame Detector

1. Remove the UV cell from the burner casing and cover the quartz glass envelope to exclude light. Care should be taken not to touch the glass.
2. Establish the electrical supply to the burner and switch on the burner. The burner should go to lockout at the end of the ignition cycle.
3. Switch off the burner and the electrical power supply to the burner. Replace the UV cell. Establish the electrical supply to the burner and switch on the burner. Reset the lockout.

Valve Proving System (if fitted)

1. Introduce a gas leak by slackening the screw in the pressure test point between the main valves.
2. Switch on the electrical supply to the burner and the burner itself. The valve proving system should lock out through failing gas pressure as the burner runs through its start cycle.
3. Re-tighten the screw in the pressure test point and reset the lockout button on the valve proving system.

ROUTINE MAINTENANCE

ALWAYS SWITCH OFF THE ELECTRICAL POWER AND FUEL SUPPLIES TO THE BURNER BEFORE CARRYING OUT MAINTENANCE.

Combustion Air Fan – All Models

Remove the burner top cover to gain access to the combustion air fan. Clean the fan blades with a stiff brush, taking care not to damage them.

Inspect the burner air inlet frequently and ensure that there is no obstruction to the air flow.

Replacing the Air/Gas Ratio Controller

If mechanical or electrical failure necessitates replacement of the air/gas ratio controller, the burner must be recommissioned to ensure that it is returned to the correct combustion and throughput settings.

Replacement of the air/gas ratio controller and the subsequent recommissioning shall be undertaken only by appropriately qualified and experienced personnel.

Burner Inner Assembly

To gain access to the burner inner assembly, first remove the multi-pin plug from the socket on the control system.

Remove the locking nut securing the hinged extension and open this extension. Disconnect the ignition leads.

Remove the two screws which secure the oil manifold within the hinged extension.

Remove the four bolts which locate the inner assembly and withdraw the assembly, taking care not to damage it.

Clean the air diffuser and gas nozzle with a stiff brush.

Clean and reset the ignition electrodes and check that they are not cracked or worn. Renew the electrodes if necessary.

Remove the oil gun, complete with nozzle, from the centre of the inner assembly. Remove the nozzle from the gun and wash it in a suitable solvent, removing any remaining deposits with a clean, lint-free cloth. The oil nozzle should be replaced after 5000 hours operation.

Reverse the order of actions detailed above to replace the inner assembly and prepare the burner for normal operation.

Oil Filters

If the filter fitted in the oil supply line has a disposable element this should be replaced at least once a year, more frequently if this is dictated by the condition of the fuel or other local conditions. If the filter element is re-usable it should be cleaned at appropriate intervals.

After filter cleaning operations it will be necessary to remove air from the system by bleeding the pump.

FAULT FINDING

Any changes made in control settings as a result of identifying and remedying fault conditions as described below may necessitate partial or complete recommissioning. Recommissioning shall be undertaken only by appropriately qualified and experienced personnel.

Burner Motor Fails to Start

Possible Reason	Remedy
No power supply to burner	Reinstate power supply
	Check fuses
	Check burner correctly wired
Power supply to burner OK	Check appliance controls calling for heat
	Check burner not locked out
	Check motor overload not tripped
Gas train disconnected	Check and reconnect
Appliance controls incorrectly set	Check and adjust as necessary
Gas supply isolated	Restore supply
Low gas pressure	Check and rectify
Low gas pressure switch incorrectly set	Check and adjust as necessary
Air pressure switch not in start position	Check as below
Fuel selector switch incorrectly set	Check and reset
Oil line ball valve incorrectly set	Check and reset
Valve proving system locked out	Check and reset

To check that the air pressure switch is in the “start” position:

1. Switch off the electrical power supply to the burner.
2. Remove the plug-in assembly from the control box base.
3. Using a suitable instrument, check for electrical continuity between the following terminal:
   Landis & Staefa LFL 1.333, Terminals 13 and 14
4. If the air pressure switch is not in the start position turn the setting dial clockwise fully to the maximum setting. Check again for continuity between the above terminal. If there is no continuity the pressure switch is faulty and should be renewed.

If a gas booster is fitted:

1. Ensure that the low inlet gas pressure switch is not locked out.
2. Check that the booster drive belt is fitted.
3. Verify that the booster motor is rotating correctly.

Fan Starts and Burner goes to Lockout

1. No Ignition

Possible Reason	Remedy
Air pressure switch settings incorrect	Reset
Ignition electrode settings incorrect	Reset
Cracked electrode insulation	Renew electrode
HT lead disconnected or damaged	Reconnect or renew as necessary
Ignition transformer faulty	Renew electrode
Programming controller faulty	Check and renew as necessary

2. No Flame – Gas Firing

Possible Reason	Remedy
Gas supply isolated	Check gas supply to burner
Gas pressure too low	Investigate and remedy
Air flow incorrect for gas flow	Check and adjust as necessary
Valves fail to open	Check wiring, replace valves if faulty
Manual isolation valve closed	Open valve
Carbon on diffuser	Clean

3. No flame – Oil Firing

Possible Reason	Remedy
Oil supply interrupted	Check oil supply to burner
Pump coupling failed	Replace
Pump drive motor (if fitted) failed	Check wiring, fuses, etc
Oil pressure too low	Investigate and remedy
Valves fail to open	Check wiring, replace valves if faulty
Oil pump faulty	Replace
Filter blocked	Clean or replace
Nozzle blocked	Clean or replace
Carbon on diffuser	Clean

Start Flame Failure

Failure of the start rate flame will produce lockout. Confirm start flame failure by checking the flame signal at the appropriate stage. If the flame signal is low, the cause may be:

1. A dirty or wrongly positioned (it must face towards the flame) glass envelope on the UV cell.
2. A fault in the UV cell or its wiring – check and replace if necessary.
3. The flame signal check link has been removed – check and replace.
4. There is insufficient fuel under ignition conditions to allow the flame to be detected adequately – adjust the flow rate.
5. Partial blockage of the oil nozzle – check and clean if necessary.
6. Carbon on the air diffuser – check and clean if necessary

Incorrect Rotation of Burner Motor

The motor should rotate anti-clockwise as viewed from the motor end. If the direction of rotation is incorrect interchange two phases in the three-phase power supply. If this does not correct the direction of rotation the motor should be renewed.

If it is necessary to change this motor or the combustion air fan the following procedure should be followed:

1. Switch off the burner and the electrical power supply to the burner.
2. Disconnect the multi-pin plug from the socket on the control system.
3. Remove the screw which holds the control system to its mounting bracket.
4. Lift the control system from its mounting bracket and rest it on the gas valve train.
5. The securing studs, fixing nuts and bolts on the mounting flange are now readily accessible.

Main Flame is Not Established

Possible Reason	Remedy
Fuel pressure or flow too low	Check fuel supply to burner
Main gas/oil valve fails to open	Check wiring, replace valve if faulty
Programming controller faulty	Check and renew as necessary
Low fire hold link removed	Replace link
Gas train gasket incorrectly positioned	Reposition
Air setting incorrect	Reset

Burner Motor only runs Continuously

Possible Reason	Remedy
Air control damper motor failed	Renew
Air control damper cam loose	Tighten
Microswitch fails to change over	Renew
Damper motor incorrectly wired	Rewire

SPARE PARTS

For spare parts contact Nu-way's Parts and Components Division at the address and telephone number listed on the rear cover of this manual.

To avoid delays, please provide the burner model, serial and specification numbers.

APPENDIX

This appendix contains additional information and documentation, including:

- Burner head details and dimensions
- Electrode setting details
- Burner performance envelopes
- Commissioning sheets (oil and gas). Blank sheets are provided which must be filled in by the engineer on completion of commissioning.
  For two stage (high/low) burners the pressure, combustion quality and temperature data should be obtained for both high and low fire settings for both oil and gas firing.
  For fully modulating burners additional data at intermediate positions in the operating range between high and low fire are required.
  A copy of the completed sheet must be sent to the appliance manufacturer.
- Burner service record sheets, to enable the user to maintain a service history.
- Blank 'Notes' page to allow the user to make any relevant notes, comments or other relevant information.

Burner Head Details

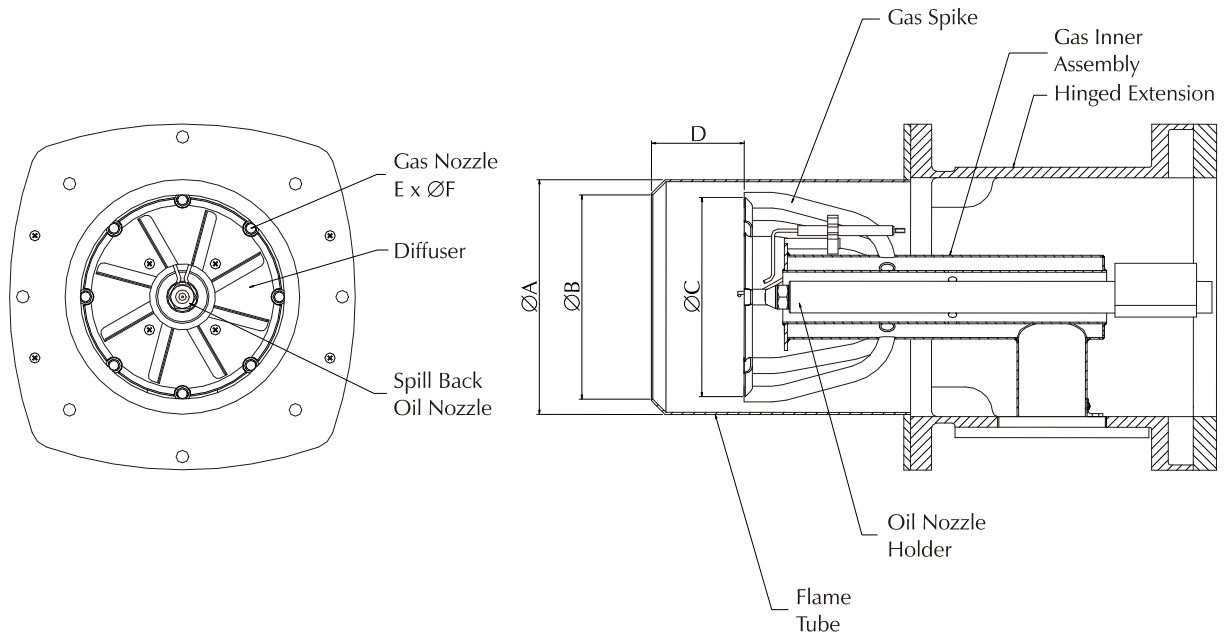

Burner Head Dimensions

Model	Dimensions					
	A	B	C	D	No. E	F
MDFL 3300-36	305	279	248	89	8	12.7
MDFL 3300-41	305	279	248	89	8	12.7
MDFL 4000-36	305	279	238	89	8	12.7
MDFL 4000-41	305	279	238	89	8	12.7
MDFL 4000-44	305	279	238	89	8	12.7

Electrode Setting Details

Single Spill Back
Oil Nozzle Models

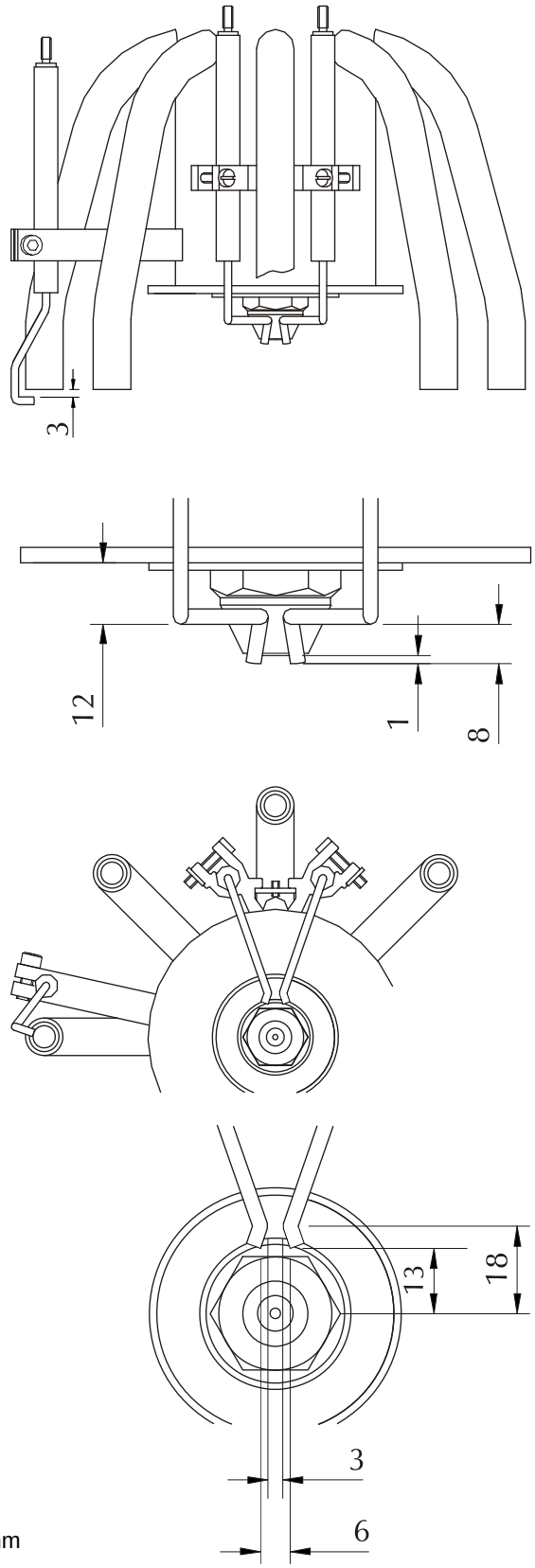

All dimensions in mm

Performance Envelopes : MDFL 3300 and MDFL 4000

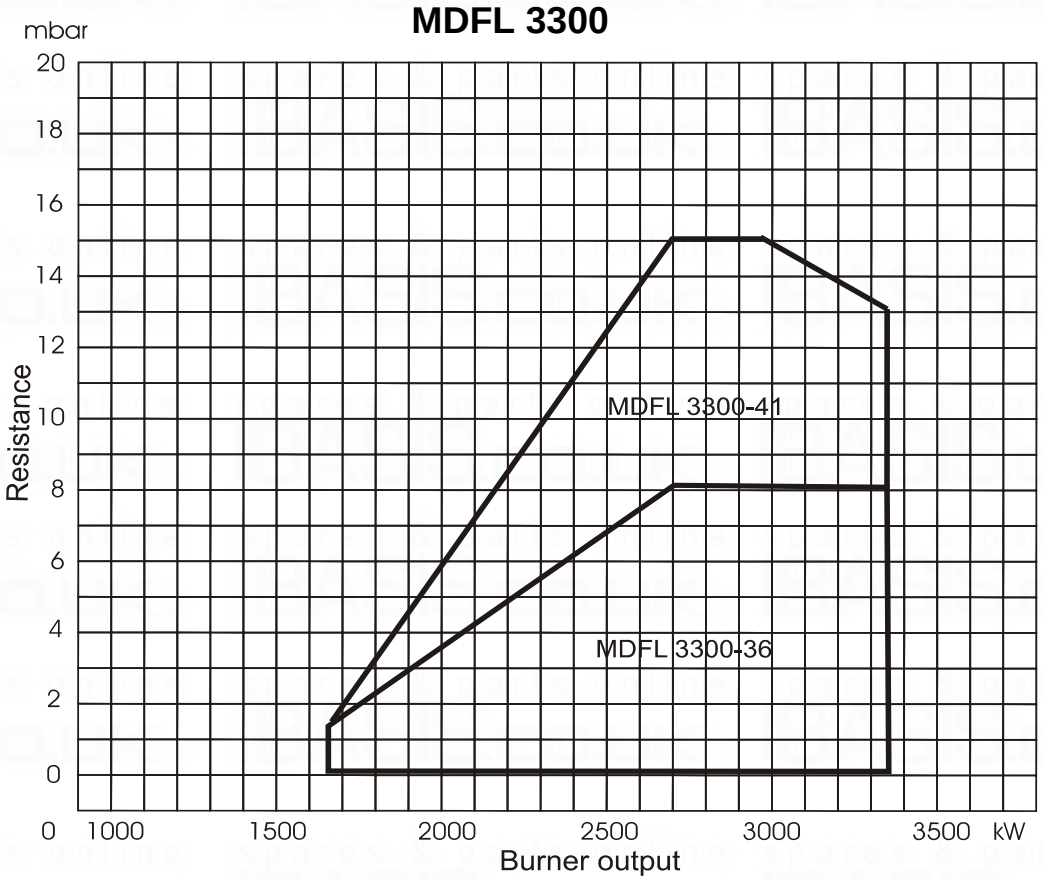

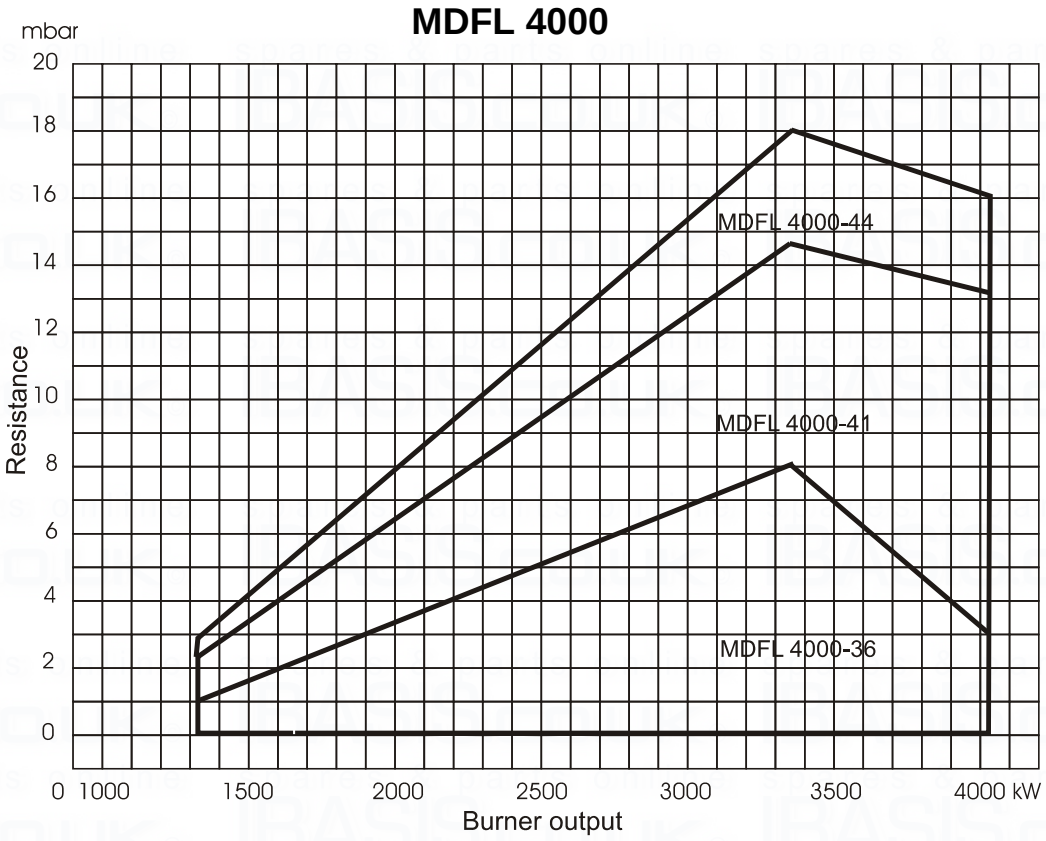

Oil Commissioning Sheet

The details below are to be completed by the Commissioning Engineer. The completed sheet must then be photocopied and a copy forwarded to the appliance manufacturer.

Installer's Name:

Address:

Site Address:

Appliance	Type:	Size:	Serial Number:
Burner	Type:	Size:	Serial Number:

Commissioning Date:

Guarantee Expiry Date:

Fuel Oil Type:

Oil pressure upstream of pump:

Standing bar or psi Running bar or psi

Firing Rate		High Fire	Intermediate Positions					Low Fire	Units[1]
Pressure at burner	Oil								bar or psi
	Air								mbar or ins wc
Oil Rate									kg/h or lb/h
Heat Input									MW or MJ/h or Btu/h
O_2									% Dry Basis
CO_2									% Dry Basis
CO									ppm Dry Basis
Flue Temp.									°C or °F
Ambient Temp.									°C or °F
Temp. Difference									°C or °F
Efficiency									%

[1]Note: where a choice of measurement units is shown, delete those not applicable,

Gas Commissioning Sheet

The details below are to be completed by the Commissioning Engineer. The completed sheet must then be photocopied and a copy forwarded to the appliance manufacturer.

Installer's Name:

Address:

Site Address:

Appliance	Type:	Size:	Serial Number:
Burner	Type:	Size:	Serial Number:

Commissioning Date:

Guarantee Expiry Date:

Fuel Oil Type:

Gas pressure upstream of main governor:

Standing mbar or ins wg Running mbar or ins wg

Firing Rate		High Fire	Intermediate Positions					Low Fire	Units[1]
Pressure at burner	Gas								mbar or ins wg
	Air								mbar or ins wc
Gas Rate									m^3/h or ft^3/h
Heat Input									MW or MJ/h or Btu/h
O_2									% Dry Basis
CO_2									% Dry Basis
CO									ppm Dry Basis
Flue Temp.									°C or °F
Ambient Temp.									°C or °F
Temp. Difference									°C or °F
Efficiency									%

[1]Note: where a choice of measurement units is shown, delete those not applicable,

BURNER SERVICE RECORD

The details below are to be completed by the Servicing Engineer

This sheet to be completed and signed following each service/adjustment

Date	Details of Service	Signature

NOTES

spares & parts online IBASIS.CO.UK®

Enertech Limited,
P O Box 1,
Vines Lane
Droitwich,
Worcestershire,
WR9 8NA

Tel: +44 (0) 1905 794331 **Fax:** +44 (0) 1905 794017
Email: info@nu-way.co.uk **Web:** www.nu-way.co.uk

NU-WAY®
Enertech Group