NU-WAY®
Enertech Group

Installation & Maintenance Manual

Series NG fully automatic gas burner
Models NG15, 25 & 35

Gas Burner

Tel: +44 (0) 1905 794331 **Fax:** +44 (0) 1905 794017 **Email:** info@nu-way.co.uk **Web:** www.nu-way.co.uk

Contents

Important - Safety **3**
European Boiler Efficiency Directive (B.E.D.) **3**
Burner & Component Identification For NGN15 O/O **4**
Burner & Component Identification For NGN15 & 25 H/L **6**
Burner & Component Identification For NGN35 ..... **8**
Features **10**
Burner Capacity 10
Air Regulation 10
Controls 10
Operation 10
Fuel 10
Weight 10
General **10**
Flue And Chimney Requirements 10
Plant Room Ventilation 10
Existing Appliances 10
Combustion Chamber Conditions 11
Packaging For Transit **11**
Assembly 11
Services & Site Conditions **11**
Gas Supply 11
Installation **11**
General 11
Fitting To The Appliance 11
Electrical Power Supply 11
Wieland 7 and 4 Pin Connections 13
Burner Air Controls **14**
Single Stage (On/Off) Burner Only 14
Two Stage (High/Low) Burners 14
Air Diffuser 14
Air Pressure Switch 14
Burner Gas Controls **14**
Gas Nozzle 14
High Gas Pressure Switch (High/Low Only) 14
Low Gas Pressure Switch 14
Gas Valve Multibloc - Single Stage (On/Off) NGN15 14
Gas Valve Train - Single Stage (On/Off) NGN25 & 35 14
Two Stage (High/Low) NGN15, 25 & 35 14
Air Damper Motors 15
Valve Adjustment Diagram - Dungs Gas Valve NGN15 On/Off 16
Valve Adjustment Diagram - Landis & Staefa SKP7x Gas Valve High/Low Burners 17
Valve Adjustment Diagram - SKP2x Gas Valve NGN25 & 35 On/Off 18
Controls **18**
Flame Monitor **18**
Burner Operating Sequence **18**
Single Stage (On/Off) Burners 18
Two Stage (High/Low) Burners 18
Air/Gas Ratio Controller - Two Stage (High/Low) 19
Initial Burner Setting - Two Stage (High/Low) 19
Air/Gas Ratio Controller 19

Start Rate Gas Governor (excluding NGN15 (On/Off)) 20
Burner Dry Run 20
Burner Live Run - Commissioning 20
Check For Valve Closure. 20
Natural Gas Supply Pressures 22
Establishing Main Flame 22
Measuring Gas Flow 22
Dungs Multibloc (NGN15 On/Off) 22
Landis & Staefa SKP2x (NGN25 & 35 On/Off) 22
Landis & Staefa SKP7x High/Low Burners. 23
Burner Start Gas Rate 23
Check Flame Signal 23
Air Pressure Switch Setting 24
High Gas Pressure Switch Setting (High/Low only) 24
Low Gas Pressure Switch Setting 24
Final Check 24
Commissioning Is Now Complete 24
Routine Safety Checks 25
Flame Detection System 25
Flame Probe (Flame Rectification Rod) 25
UV (Ultra-Violet) Cell 25
Routine Maintenance 25
Fault Finding 25
Spare Parts Identification 26
Motor & Fan - Removal 26
Appendix 27
Combustion Head Details for NGN15 27
Combustion Head Details for NGN15(High/Low) & NGN25 28
Combustion Head Details for NGN35 29
Gas Supply Pressure Graph for NGN15 with Dungs Control Train 30
Gas Supply Pressure Graph for NGN15 with Landis & Staefa Control Train 31
Gas Supply Pressure Graph for NGN25 with Landis & Staefa Control Train 32
Gas Supply Pressure Graph for NGN35 with Landis & Staefa Control Train 33
Commissioning Sheet 34
Notes 35

Important - Safety

It is essential that the following instructions and adjustments are carried out by qualified engineers that are experienced in blown gas burner commissioning. In the U.K. it is a legal requirement that anyone working on gas installation, as defined in the "Gas Safety (Installation & Use) Regulations 1994" is CORGI registered. The manufacturer cannot be held responsible for any consequential damage, loss or personal injury as a result of failure to follow these instructions, or as a result of misuse. **Your attention is drawn to the Emergency Instructions on Page 20.**

European Boiler Efficiency Directive (B.E.D.)

All burners and boiler bodies marketed seperately should comply with EN676 - Gas Buirners and EN303 - Heating Boilers. Burner adjustments must be made in accordance with boiler manufacturers' instructions. and these must include flue gas temperatures, average water temperature, and CO_2 or O_2 concentration.

Burner & Component Identification For NGN15 O/O

Standard Burner Arrangement Shown

Item	Description
1	Burner Casing
2	Hinged Extension
3	Flame Tube
4	Fan Motor
5	Air Inlet
6	Low Gas Pressure Switch
7	Burner Controls
8	Control panel
9	Air Pressure Switch
10	Gas Multibloc Valve

BURNER MOUNTING DETAIL

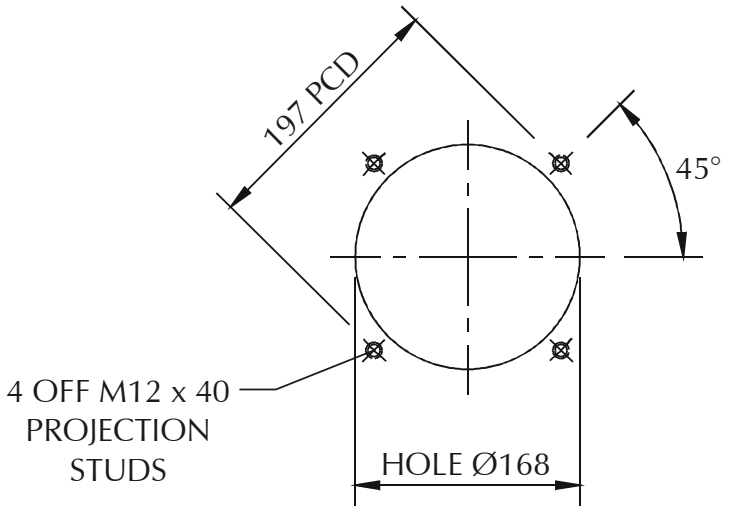

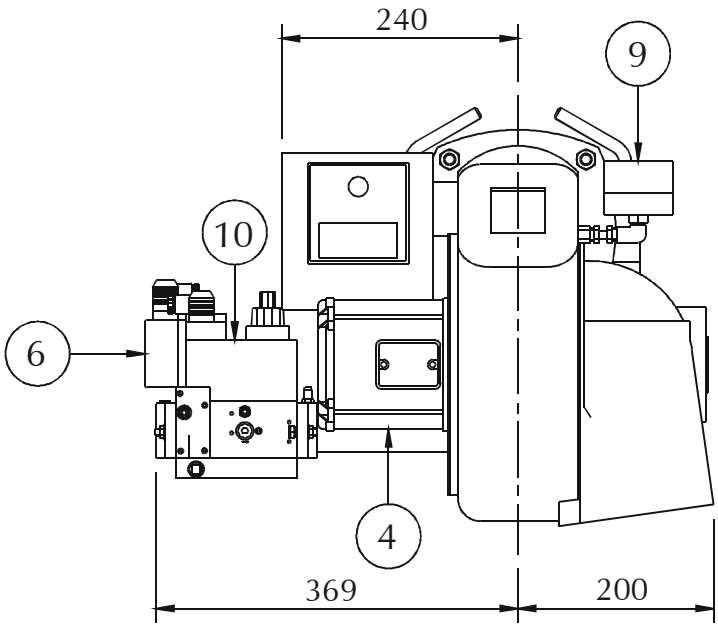

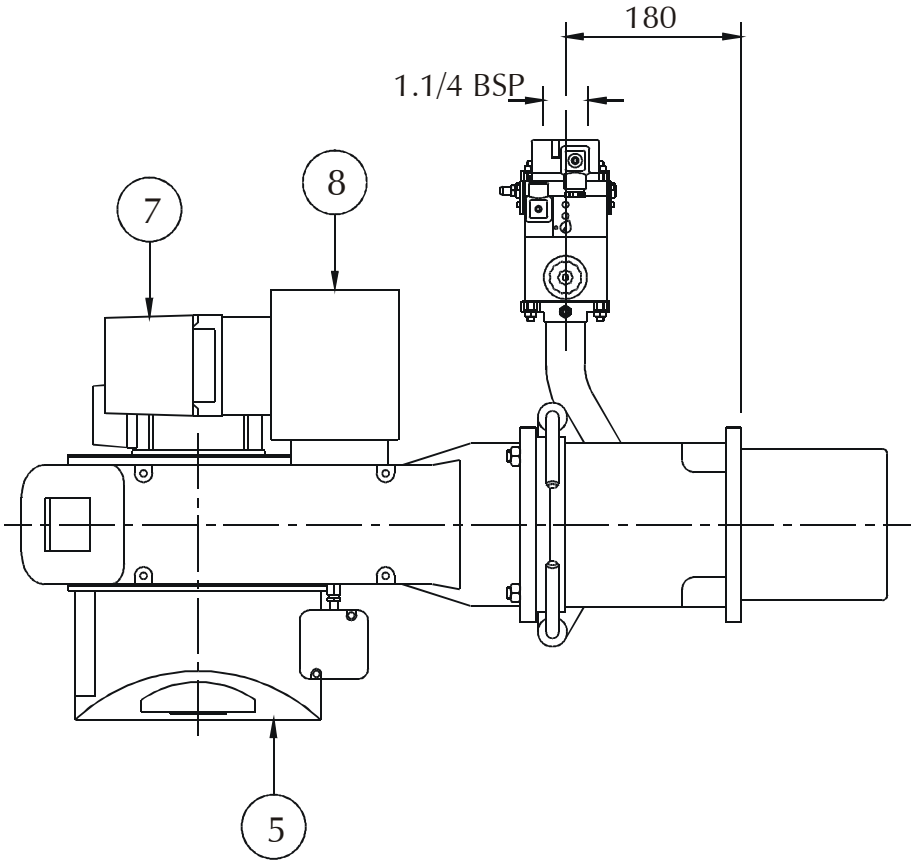
180
1.1/4 BSP
7
8
5

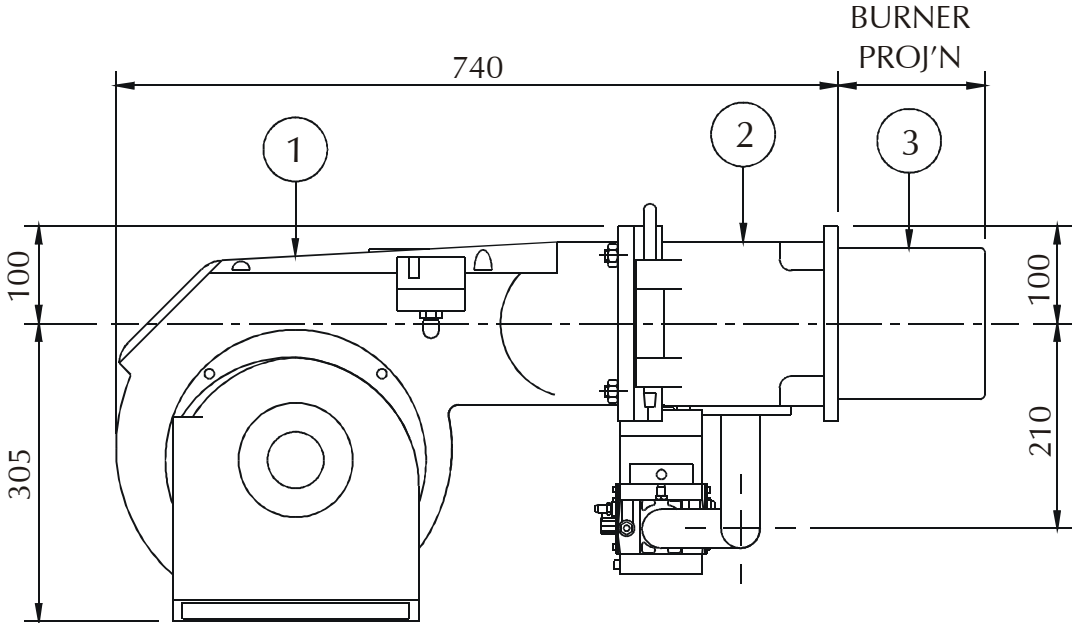
BURNER
PROJ'N
740
1
2
3
100
305
100
210

Burner & Component Identification For NGN15 & 25 H/L

Standard High/Low Burner Arrangement Shown

Item	Description
1	Burner Casing
2	Hinged Extension
3	Flame Tube
4	Fan Motor
5	Air Inlet
6	Air Damper Motor
7	Burner Controls
8	Low Gas Pressure Switch
9	High Gas Pressure Switch
10	Gas Valve Body
11	Gas Control Valve (SKP7x)
12	Main Gas Valve (SKP1x)
13	Pilot Solenoid Gas Valve
14	Pilot Gas Governor
15	Burner Control Panel
16	Air Pressure Switch

BURNER MOUNTING DETAIL

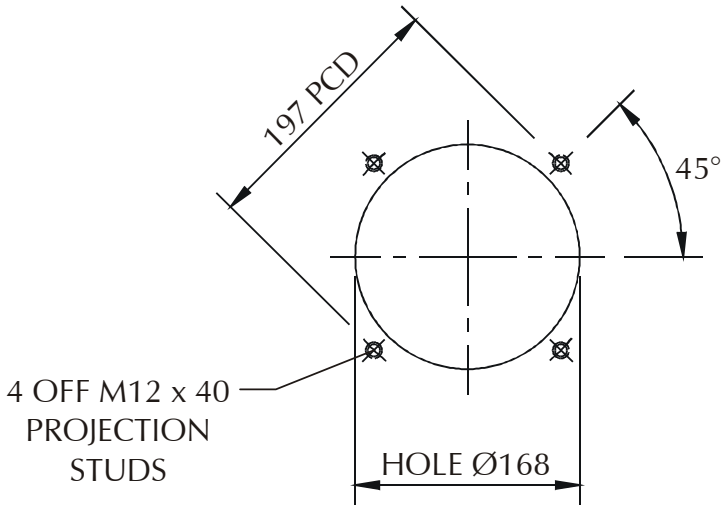

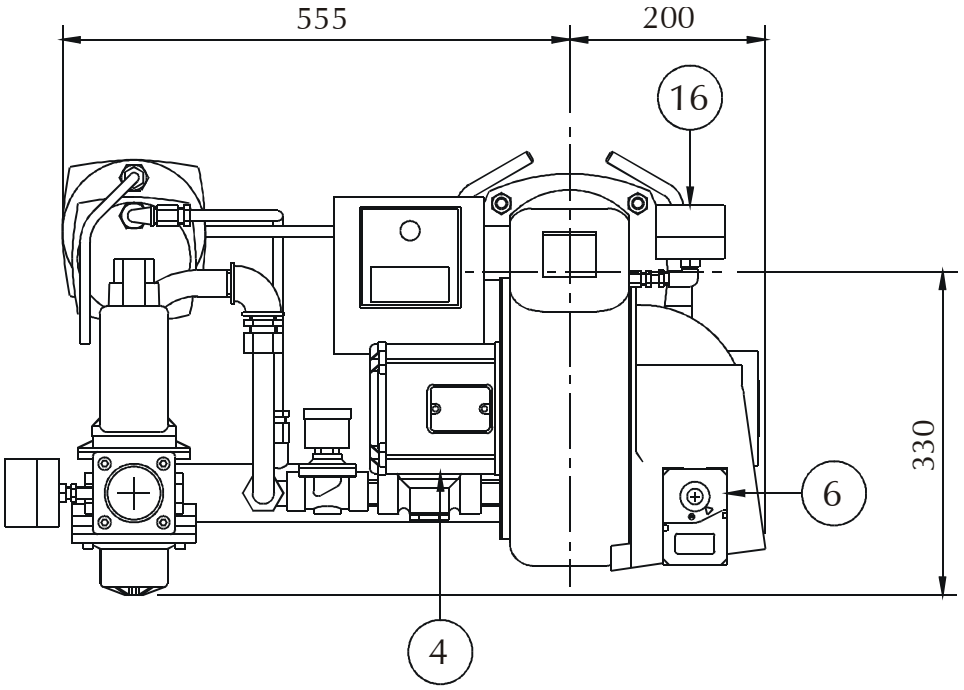

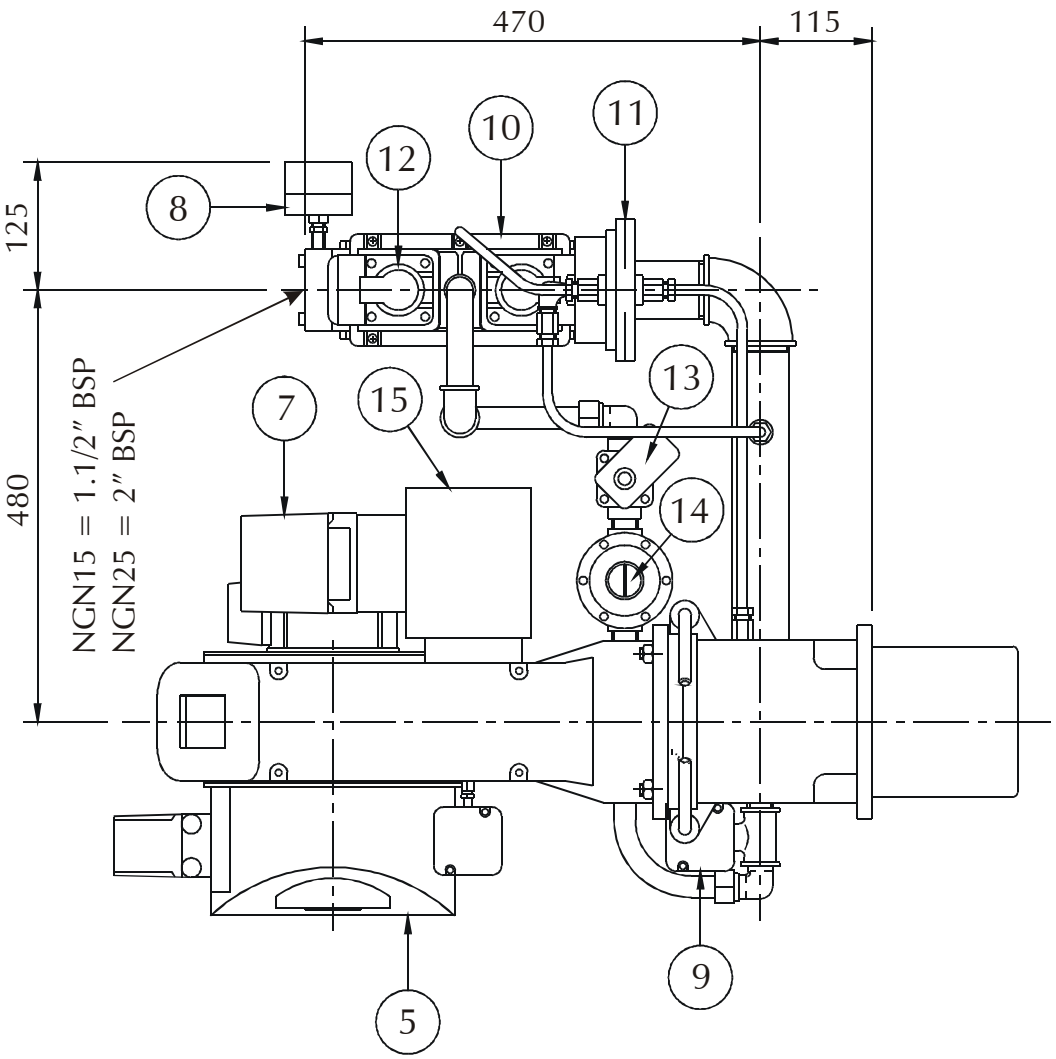
470
115
125
480
NGN15 = 1.1/2″ BSP
NGN25 = 2″ BSP
1
2
3
4
5
6
7
8
9
10
11
12
13
14
15

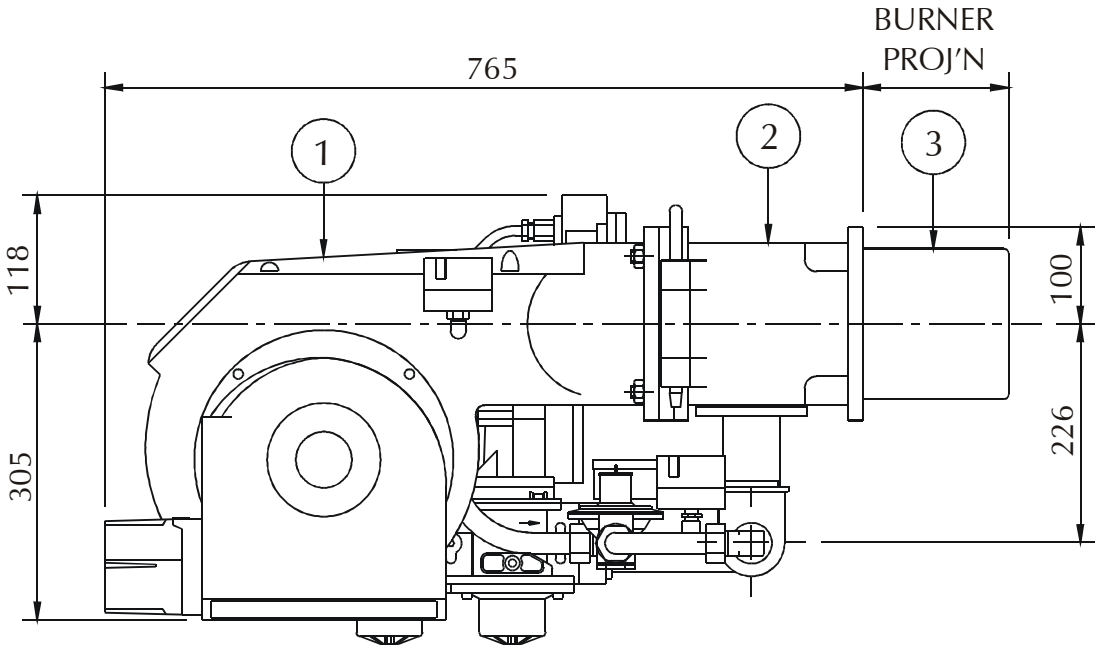
765
BURNER
PROJ'N
118
305
100
226
1
2
3

Burner & Component Identification For NGN35

Standard Burner Arrangement Shown

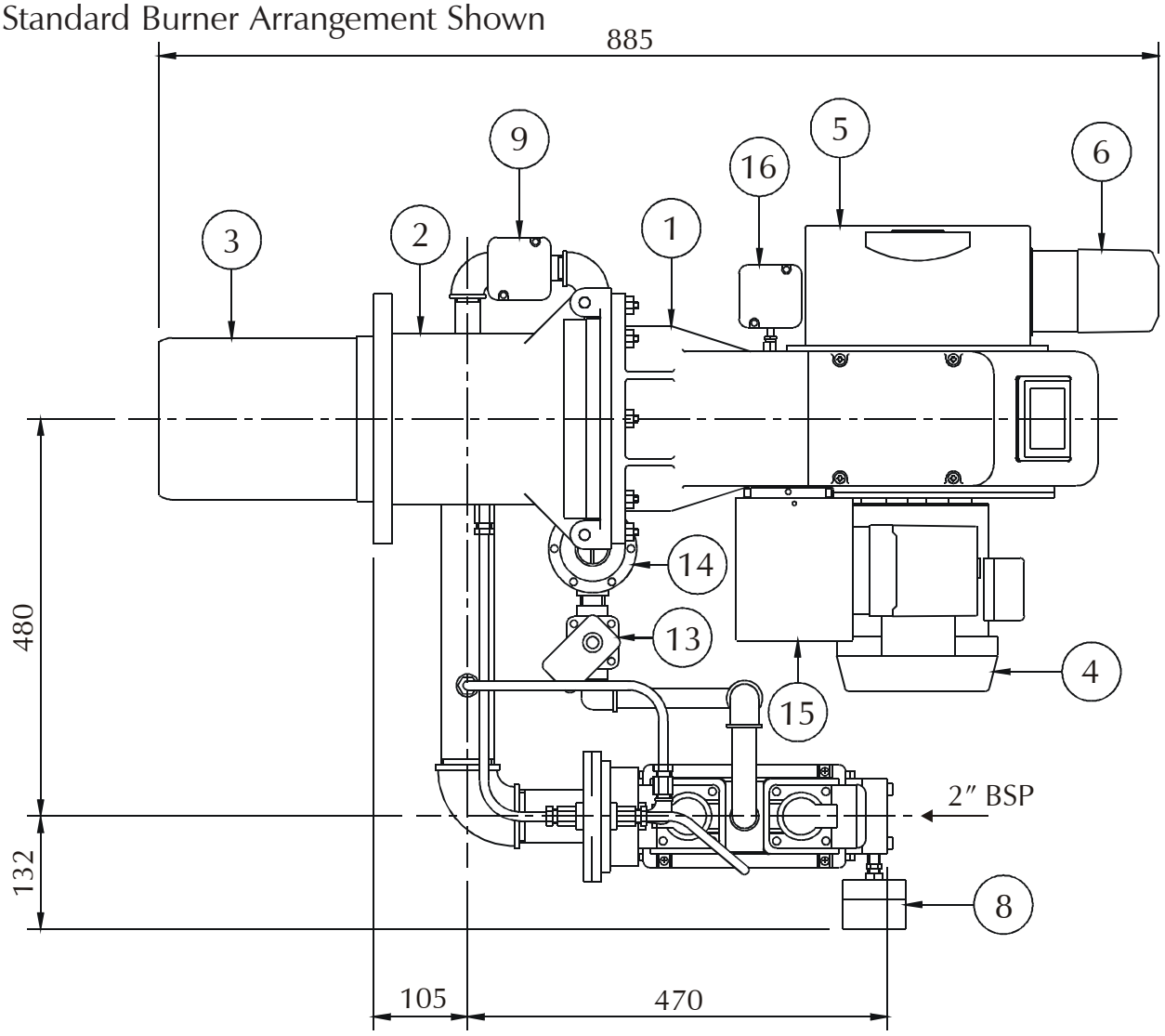

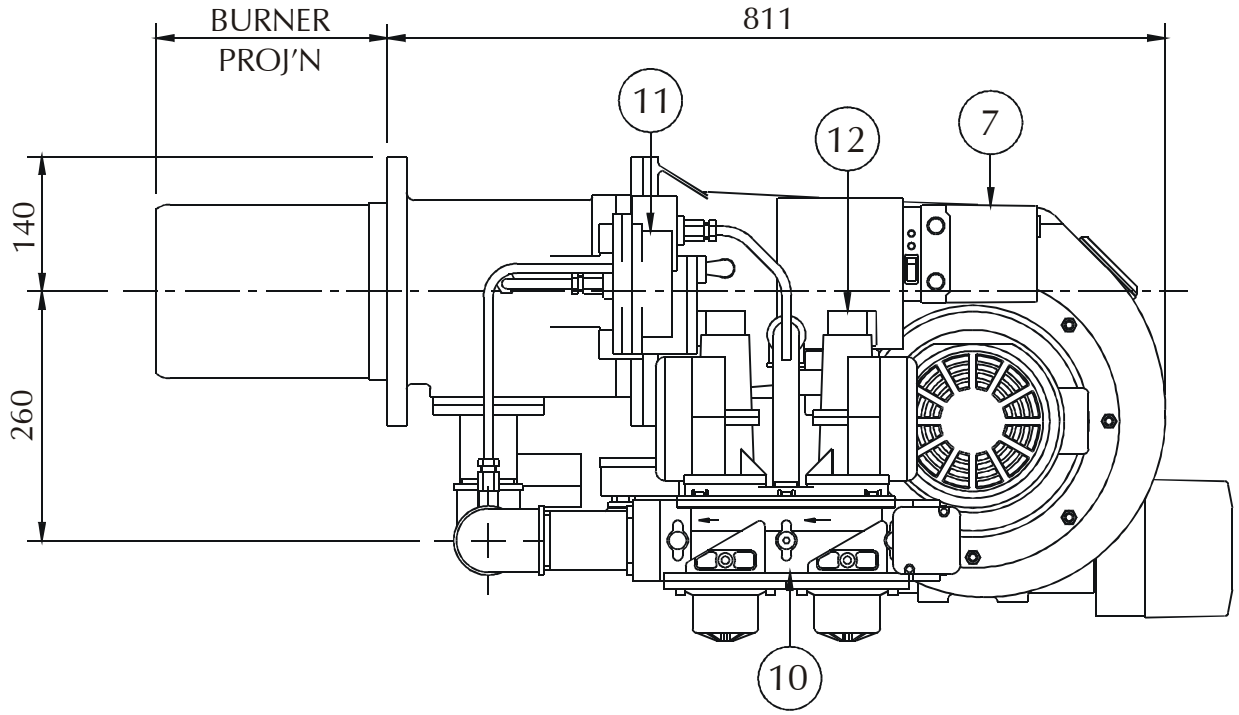

Item	Description
1	Burner Casing
2	Hinged Extension
3	Flame Tube
4	Fan Motor
5	Air Inlet
6	Air Damper Motor
7	Burner Controls
8	Low Gas Pressure Switch
9	High Gas Pressure Switch
10	Gas Valve Body
11	Gas Control Valve (SKP7x)
12	Main Gas Valve (SKP1x)
13	Pilot Solenoid Gas Valve
14	Pilot Gas Governor
15	Burner Control Panel
16	Air Pressure Switch

BURNER MOUNTING DETAIL

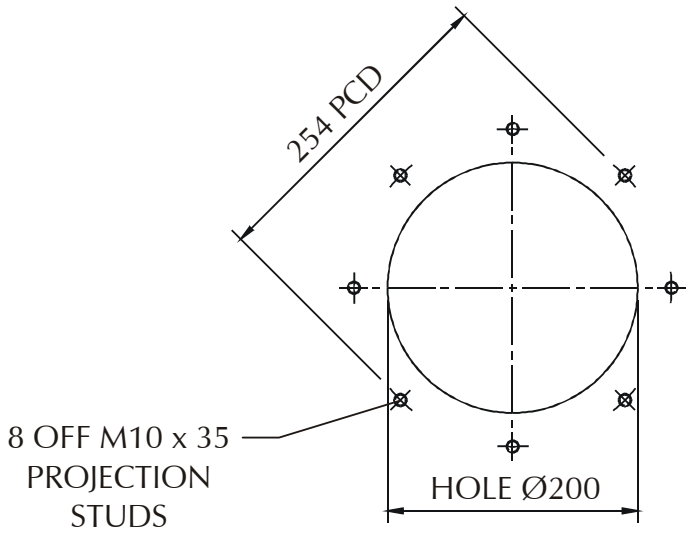

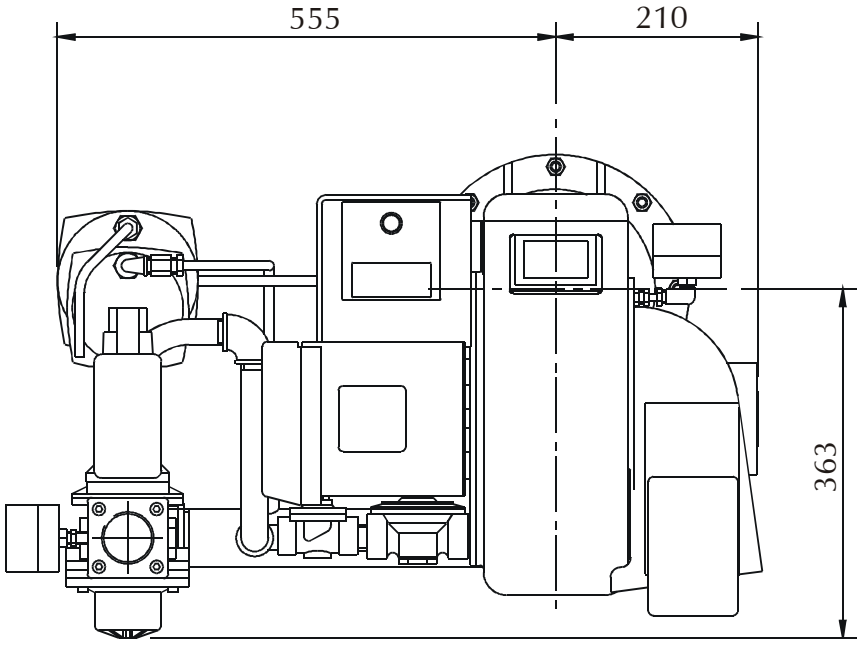

FEATURES

Burner Capacity

NGN15	210kW to 450kW
NGN25	400kW to 635kW
NGN35	430kW to 1090kW

Developed from field experiences in the UK and overseas markets, the NG series sets new standards in efficient and reliable operation, having been developed to current and future test authority requirements in UK and overseas markets. It is delivered ready to install with prewired packaged control system and simple plug in gas train arrangements.

Air Regulation

Air for combustion can be adjusted to give maximum efficiency. A patented air control device produces smooth start conditions. A fully closing air control is fitted as standard on the two stage (high/low) burner, and is an optional extra on the single stage (on/off) burner.

Controls

Flame supervision is by ionisation probe or UV cell, and automatic sequence control.

Operation

Single and two stage operation (on/off and high/low).

Fuel

Natural Gas at 17.5mbar up to 850kW, 25mbar up to 1090kW. Special requirements on request - i.e. Liquid Petroleum Gas / Town Gas.

Weight

NGN15 & 25	70kg approx.
NGN35	80kg approx.

GENERAL

The NG15-NG35 burner is supplied for single stage (On/Off) or two stage (High/Low) operation and for use with single phase or three phase electrical supply. Where an instruction or information is applicable to only one of the burner types, single or two stage, then this is indicated in the text.

This manual is structured to enable the user to proceed from the delivery of the burner to its commissioning and use.

The conditions to be fulfilled and the controls and adjustments to be used are dealt with in the sequence that should be followed for the correct assembly installation and use. *Burner Dry Run* and *Burner Live Run - Commissioning* are described and the location of necessary controls and adjustments to undertake these runs are illustrated and supported by appropriate tabular matter and graphs.

Routine Maintenance, *Fault Finding* and *Spare Parts Identification* complete the manual; literature on proprietary components is available on request.

Flue And Chimney Requirements

The top of the Chimney/Flue should be above all roofs within a radius of 10 metres.

Check that it is suitable for use with gas fired appliances. Reference should be made to Local Authority and other regulations governing such installations. Ensure that the flue pipe from the appliance does not protrude into the chimney beyond the wall thickness and is sealed throughout its run.

If more than one appliance is connected to a common flue/chimney, ensure that the cross section of the flue/chimney is adequate for the total volume of flue gases from all the appliances.

Plant Room Ventilation

An adequate dust free supply of fresh air is required for the burner at both high and low level in accordance with the appropriate standards.

Existing Appliances

In preparing the appliance to receive gas burner a careful inspection should be made of its condition. If in doubt as to its suitability for gas firing refer to the appliance manufacturer. In preparing the appliance for gas firing it should be cleaned thoroughly removing all adhering tars, scale and dirt.

Combustion Chamber Conditions

When the burner is fitted to an appliance designed to work under balanced or negative combustion chamber conditions, the over-fire draught must not exceed 0.25 mbar.

Packaging For Transit

To safeguard against transit damage and for Export shipment, the burner may be despatched in partly assembled form in one of two modes.

Mode One: Comprising Two Units

a) Burner body, complete with control package.
b) Gas train complete with hinged extension and flame tube assembly.

Mode Two: Comprising Three Units

a) Burner body, complete with control package.
b) Gas train complete with hinged extension and flame tube assembly.
c) Units are turned through 180° for transit.

Assembly

Mode One (NGN35)

Fit the gas valve train to the hinged extension using the gasket provided. Ensure the gasket is fitted correctly with all holes corresponding with those on the burner flange (connect the air inlet/ impulse pipe from the SKP7x gas valve to left hand side of the hinged extension (two stage burners only)).

Connect the multi-pin plug from the gas valve train to the socket located on the rear of the control package on the left of the burner body.

Mode Two (NGN15 & 25)

Fit the hinged extension and flame tube assembly to the burner body with the four studs provided. Ensure the gas inlet flange is at the bottom. Fit the gas valve train to the hinged extension, with the four studs using the gasket provided. Ensure that the gasket is fitted correctly with all holes corresponding to those on the burner flange. Connect the air impulse pipe from the SKP7x gas valve to left hand side of hinged extension (two stage burners).

The ignition electrode cable, probe (if fitted) and earth leads are inserted through an aperture in the base of the casing throat.

Open the hinged extension. Connect the earth lead under the inner assembly fixing screw, probe lead (brown) to the flame probe and connect the ignition cable to the electrode. Close the extension.

Connect the multi-pin plug from the gas valve train to the socket located on the rear of the control package on the left of the burner body.

Services & Site Conditions

Gas Supply

The gas supply to the burner must be constructed and installed to comply with local conditions and appropriate Codes and Standards. It should be of sufficient size to satisfy the pressure/volume requirements of the burner to ensure its operation.

It is essential that a 90° manual shut-off is fitted upstream of the burner gas train for the isolation of the burner during servicing and maintenance.

The valve size must not be less than the NG burner valve train or create restriction to gas flow.

Installation

The burner is now completely assembled and ready for fitting to the appliance.

General

Check that the burner is appropriate for appliance rating. Detailed burner performance data is given in the *Appendix* at the back of this handbook.

Fitting To The Appliance

If the burner is to be fitted to a new packaged unit, refer to the manufacturers recommendations.

If the burner is to be used with an existing appliance prepare the mounting flange as detailed in the *Burner And Components Identification* section. Ensure the joint between appliance and burner is effectively sealed with the gasket provided.

The flame tube should be flush with the inner face of the appliance combustion chamber except where extensions are specified by the appliance manufacturer (i.e. reverse flame boilers).

Electrical Power Supply

Connect a single or three phase 50Hz electrical supply to the burner observing all applicable IEE Regulations. Refer to the connection diagram below or the wiring diagram contained in the instruction pack attached to the burners.

If supplied as a packaged appliance/burner unit refer to the manufacturers instructions. Connect the external auxiliary controls by reference to the wiring diagram on pages 12 & 13.

SKP ACTUATOR UPGRADE AND NEW WIRING COLOURS

SKP ACTUATORS

A new range of valve actuators has been introduced by Siemens as an upgrade to the SKP range. The new actuators SKP15, 25, 55 and 75, are replacements for the SKP10, 20, 50 & 70 which will become obsolete. The new range of actuators will be introduced into the Nu-way range of Gas and Duel Fuel Burners as from the 1st of June 2006.

The new range of SKP actuators have plug in connections so Nu-way can no longer use the actuators as junction boxes and therefore a separate junction box will be introduced to gas trains (Similar to valve proving configuration).

Spares supply for the SKP10, 20, 50 & 70 will continue until around January 2007 depending on stock usage, in future the spares replacement for SKP valve actuators will be an upgrade kit comprising of the new actuator plus the junction box and wiring harness to enable the fitting of the SKP15, 25, 55 and 75 to burners originally fitted with the SKP10, 20, 50 & 70.

The new actuators are physically different however the function and adjustment remain the same, they will fit all existing gas valves (VGD etc.) which are unaffected.

NEW WIRING COLOURS

In accordance with the Requirements for Electrical Installations BS 7671:2001 Amendment No 2 (the IEE wiring regulations), wiring colour coding has been amended to Brown (L) and Blue (N) for single phase power circuits and Brown (L1) Black (L2) and Grey (L3) and Blue (N) **in three phase power circuits** from 1 June 2006.

Full details of the changes can be found in Amendment No 2 (AMD 14905) to BS 7671:2001 - which is a free download from the IEE website (www.iee.org/cablecolours). They are also within the new version of BS7671:2001 (Incorporating Amds 1& 2) published on 31st March; this new version of the Wiring Regulations can be identified by its brown cover.

1Phase 230V/50Hz					
Burner Model	**Motor (kW/rpm)**	**Start Current (A)**	**Full Load Current (A)**	**Main Fuse (A)**	**Cable Size (mm²)**
NGN15 & 25	0.75/2800	18.0	4.6	20	1.5
NGN35	1.1/2800	20.0	6.2	25	1.5

3 Phase 400V/50Hz					
Burner Model	**Motor (kW/rpm)**	**Start Current (A)**	**Full Load Current (A)**	**Main Fuse (A)**	**Cable Size (mm²)**
NGN15 & 25	0.75/2800	8.0	2.0	10	1.0
NGN35	1.1/2800	9.0	2.7	10	1.0

Electrical Data Table

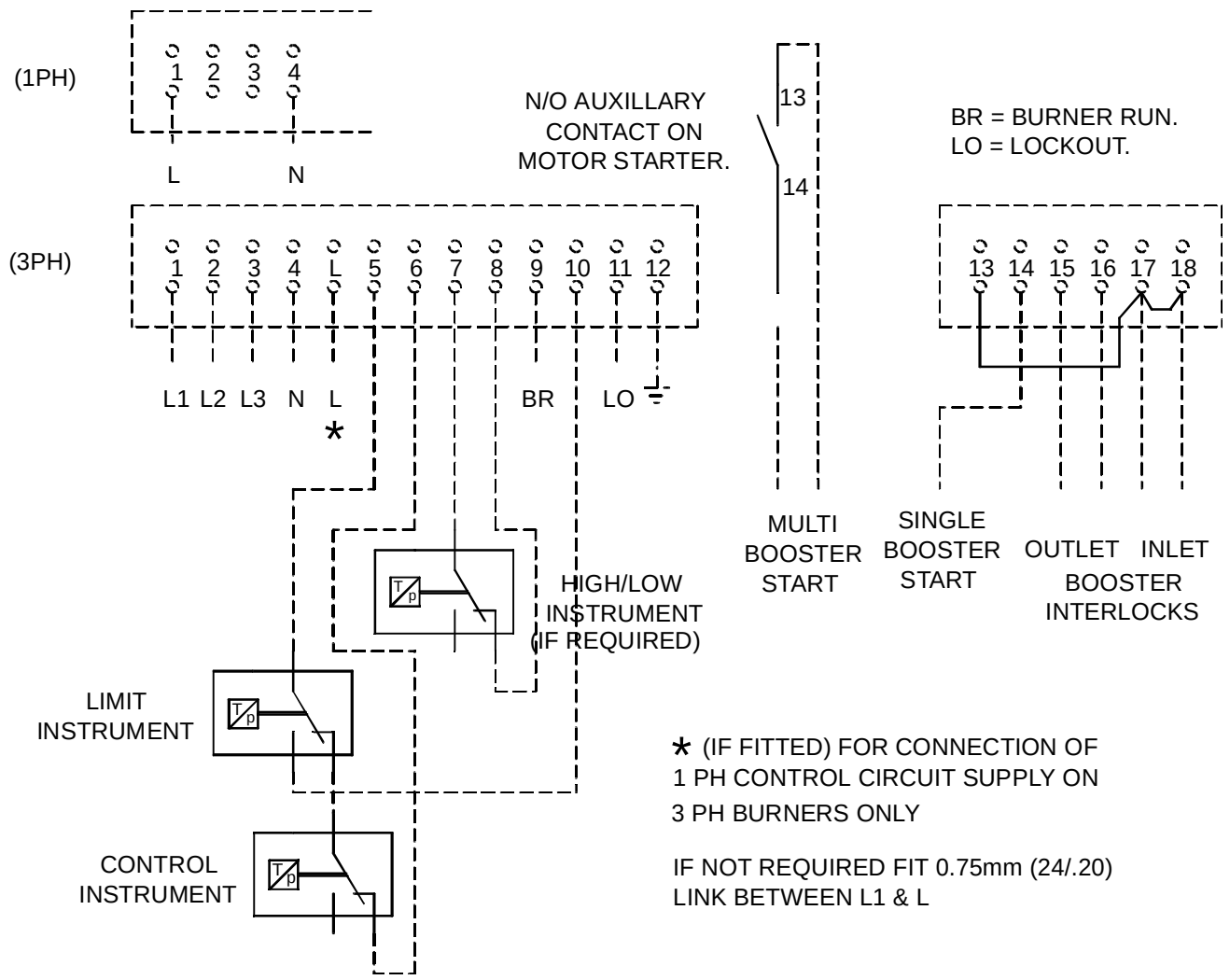

Wiring diagram for connection of burner to power supply

Standard 4 and 7 pin European Packaged Boiler/Burner connections to DIN4791
Single (On/Off) and two stage (High/Low) control

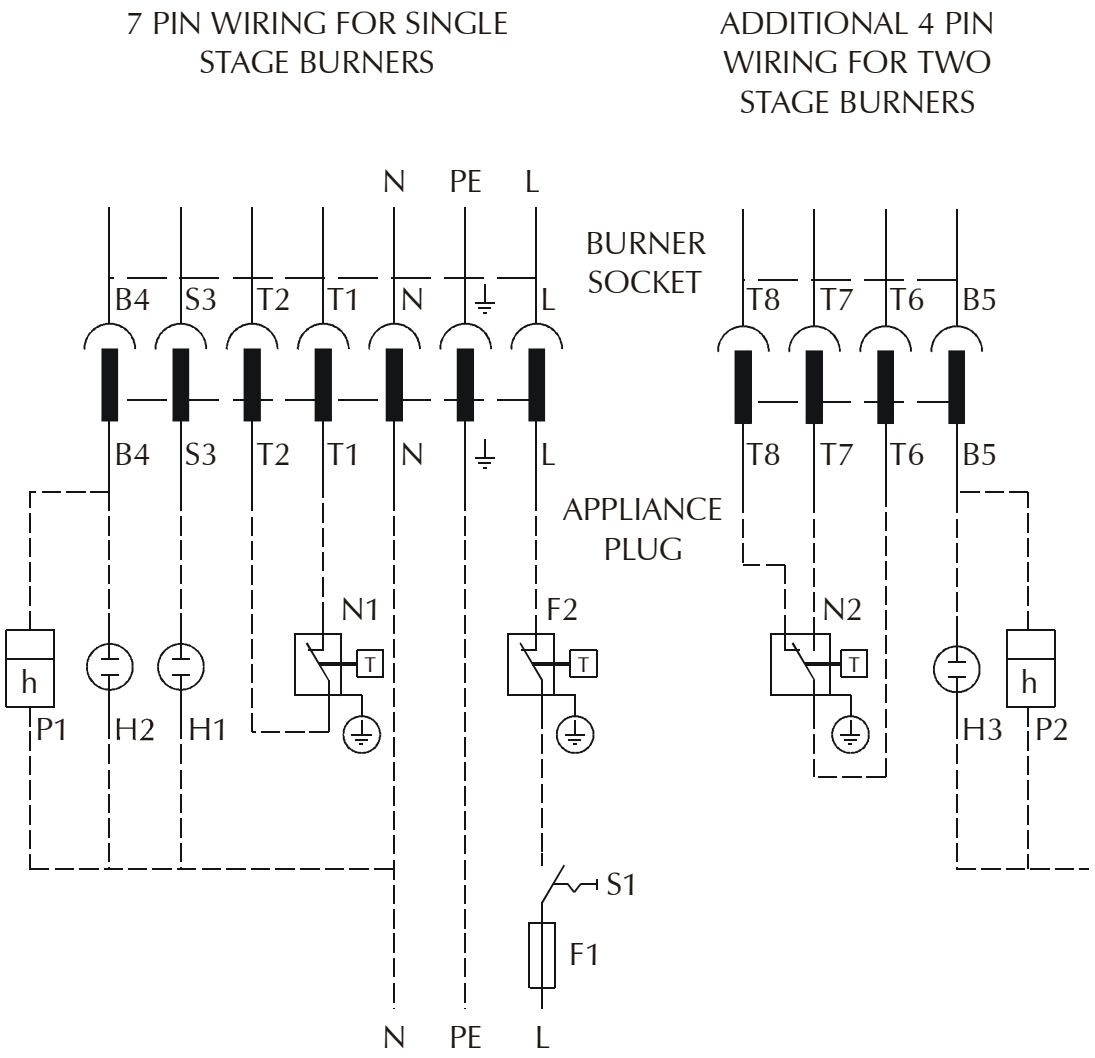

Item	Description	Item	Description
F1	Supply Fuse	**N1**	Appliance On/Off Instrument
F2	Appliance Limit Instrument	**N2**	Appliance High/Low Instrument
H1	Burner Fault Signal	**P1**	Burner Operating Hours Run Counter
H2	Burner Operating Signal	**P2**	Burner High Flame Hours Run Counter
H3	Burner High Flame Signal	**S1**	Supply On/Off Switch

Burner Air Controls

The air for combustion is controlled by an adjustable air flap located inside the air inlet on the right hand side of the burner viewed from the rear.

Its purpose is to regulate and control the volume of combustion air flowing through the burner.

Single Stage (On/Off) Burner Only

Adjustable stops for locking the air control damper in its final position are located beneath the cover on the rear of the air inlet casing.

Two Stage (High/Low) Burners

Combustion air is controlled by a three position servo motor. Positions for high and low flame air are adjustable. A fully closed position is incorporated for when the appliance temperature/pressure is satisfied.

Air Diffuser

The air diffuser is fitted to the front end of the inner assembly and located within the flame tube.

It controls the volume of combustion air and creates a pressure drop over the burner head to ensure good fuel/air mixing and flame stability.

Air Pressure Switch

Located on the right side of the burner casing viewed from the rear, it is required to prove adequate air flow throughout the burner operating cycle. Flow failure at any stage following the first few seconds of pre-purge will lockout the burner

Burner Gas Controls

Gas Nozzle

The gas nozzle is fitted to the front end of the inner assembly and located in the flame tube. The holes in the gas nozzle are designed to suit the output of the particular burner model and gas type being used.

High Gas Pressure Switch (High/Low Only)

A high gas pressure switch is fitted and prewired to the gas train. This is so that if the gas pressure at the burner head rises above the pressure at maximum continuous running, the burner will lockout, thus indicating a fault on the air/gas ratio valve. The switch is factory set to the maximum position. Final adjustment of this switch is described in the section *Burner Live Run - Commissioning*.

Low Gas Pressure Switch

The low gas pressure switch is a requirement of *EN676 (*Automatic forced draught burners for gaseous fuels), and is fitted to all burners carrying the CE mark. The switch may or may not be fitted to non CE burners.

The low gas pressure switch is located on the inlet side of the gas valve block on the left of the burner, viewed from the rear. It is required to monitor inlet gas pressure during the burner operating cycle. Gas pressure failure will result in safe shutdown of the burner. Final adjustment of this switch is described in the section *Burner Live Run - Commissioning*.

Gas Valve Multibloc - Single Stage (On/Off) NGN15

The gas valve is of the multibloc type incorporating start rate, safety and main valves and pressure governor. Valve adjustments are detailed in the *Valve Adjustment Diagram* on page 16.

Gas Valve Train - Single Stage (On/Off) NGN25 & 35

The gas valve train includes start rate valve, main gas safety shut-off valve, control valve complete with governor, and start rate gas pressure governor. Valve adjustments are detailed in the *Valve Adjustment Diagram* on page 18.

Two Stage (High/Low) NGN15, 25 & 35

The two stage system includes an air/gas ratio controller, safety shut-off valve, and gas regulator in the start rate line. Three factory-supplied impulse pipes are connected to the ratio controller.

One pipe is connected to the burner hinged extension and supplies air pressure to the ratio controller. A second pipe is connected downstream of the valve set and supplies gas pressure to the ratio controller. The third pipe is vented to atmosphere. Valve adjustments are detailed in *Valve Adjustment Diagram* on page 17.

Berger Lahr STM30 Q5

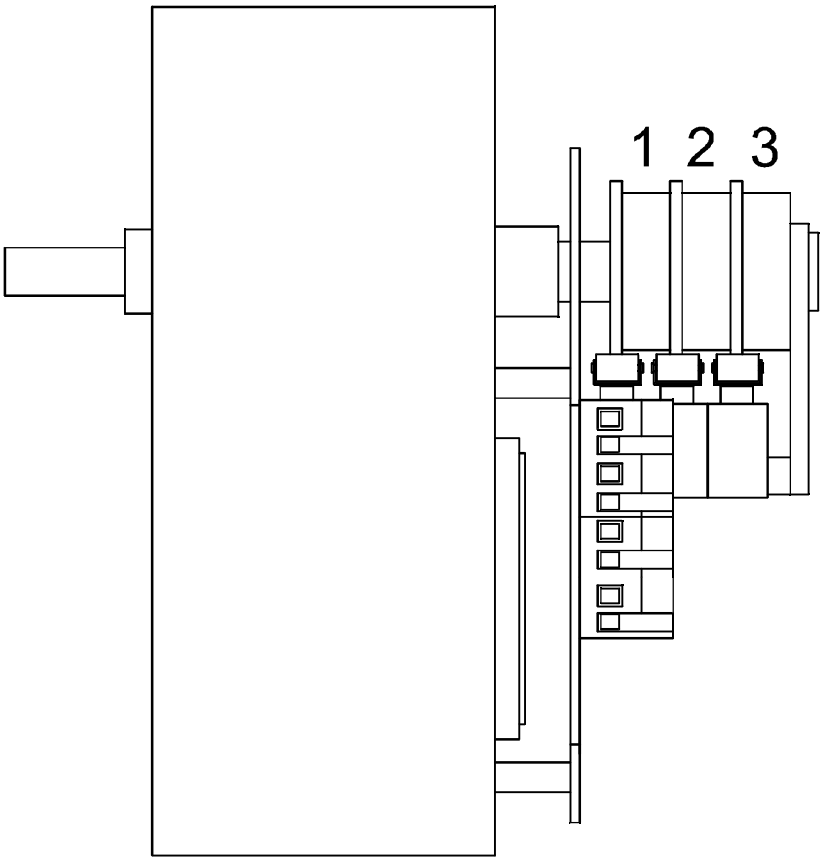

Berger Lahr STM30 Q5		
Cam State	Cam	Factory Setting
Full Air Shut-off	1	0°
Low Flame Air	2	15°
High Flame Air	3	60°

Berger Lahr STM 30 B2

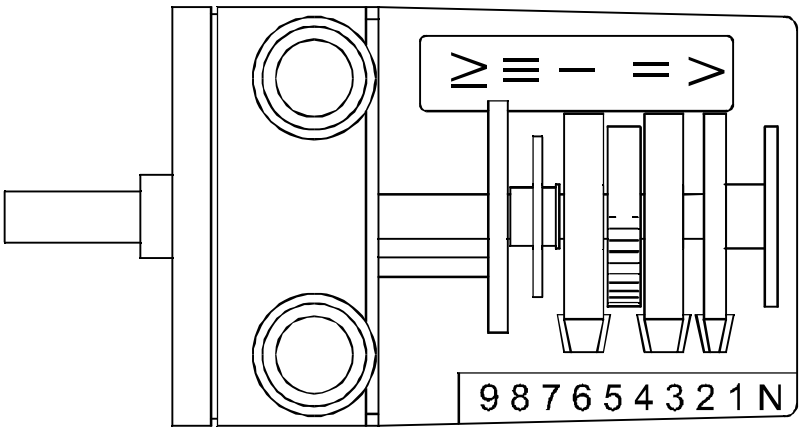

Berger Lahr STM30		
Cam State	Cam	Factory Setting
Full Air Shut-off	II	0°
Low Flame Air	V	15°
High Flame Air	I	60°

Note: The fully closed cam is factory set, and under normal circumstances should not require further adjustment. Operation of the low and high flame air switches is made by manually adjustable cams. A setting scale is provided at the end of the cam stack for guidance, while adjustments are made using the screw adjusters situated within the cam disk body (STM30 Q5), or with levers and fine setting screw adjusters (STM30 B2).

Adjustment	Description
A	Governor adjustment. Turn clockwise to increase pressure. Range = 4 - 20 mbar.
B	Main Valve fast initial lift adjuster (Remove fluted cover).
C	Main Gas Adjustment. Slacken cheesehead screw and turn fluted knob anti-clockwise to open.
D	Low Gas pressure switch.
E	Upstream pressure Test Point.
F	Downstream pressure Test Point.
G	Pilot Rate Adjuster. Turn anti-clockwise to increase rate.
H	Test Point between valve seats.

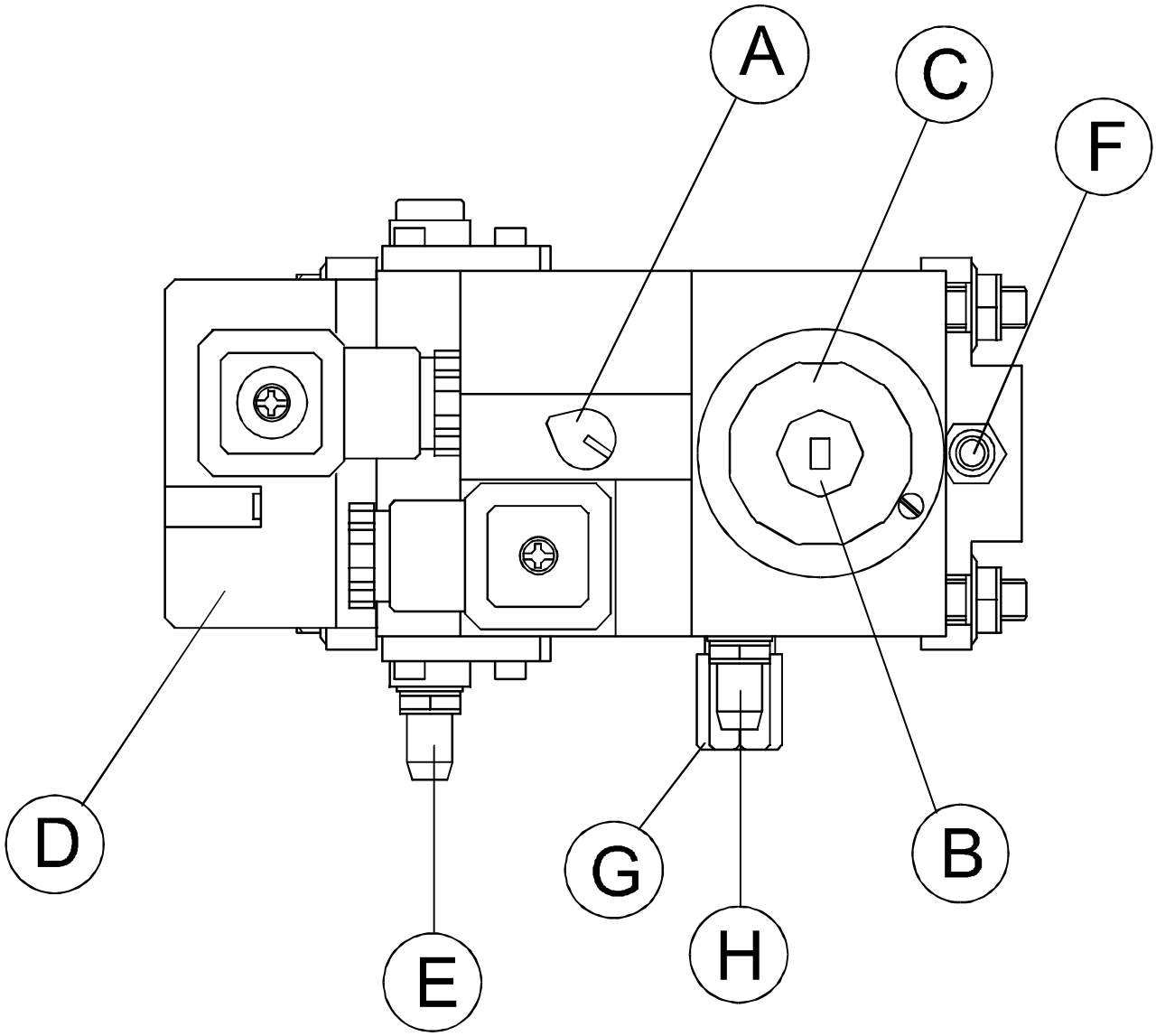

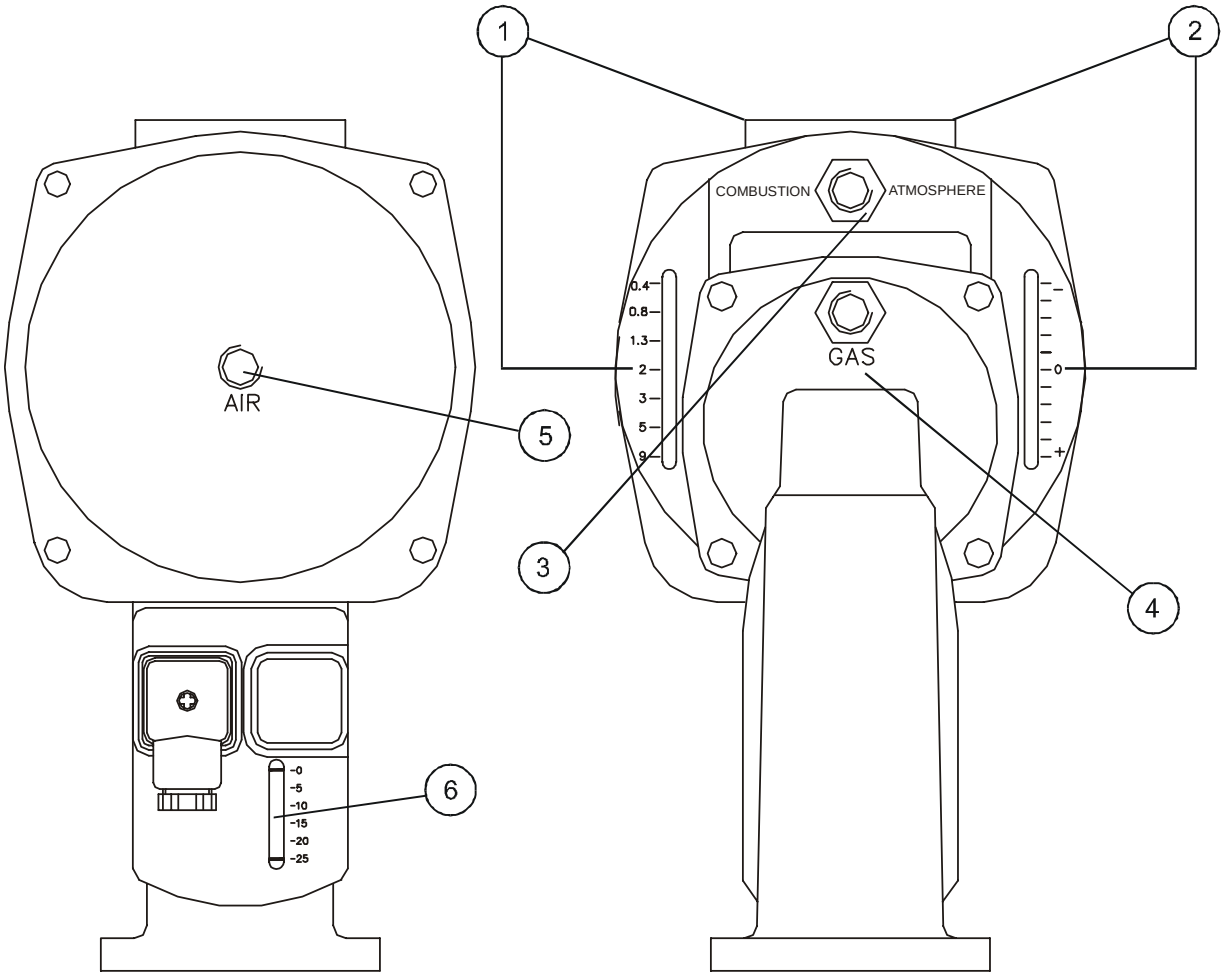

Adjustment	Description
1	Adjustment and indication of the gas/air ratio (high fire setting).
2	Adjustment and indication of the parallel displacement of the characteristic (low fire setting).
3	Vented to atmosphere.
4	Connection to the gas line.
5	Connection to the combustion air supply at the burner head.
6	Indication of the valve stroke.

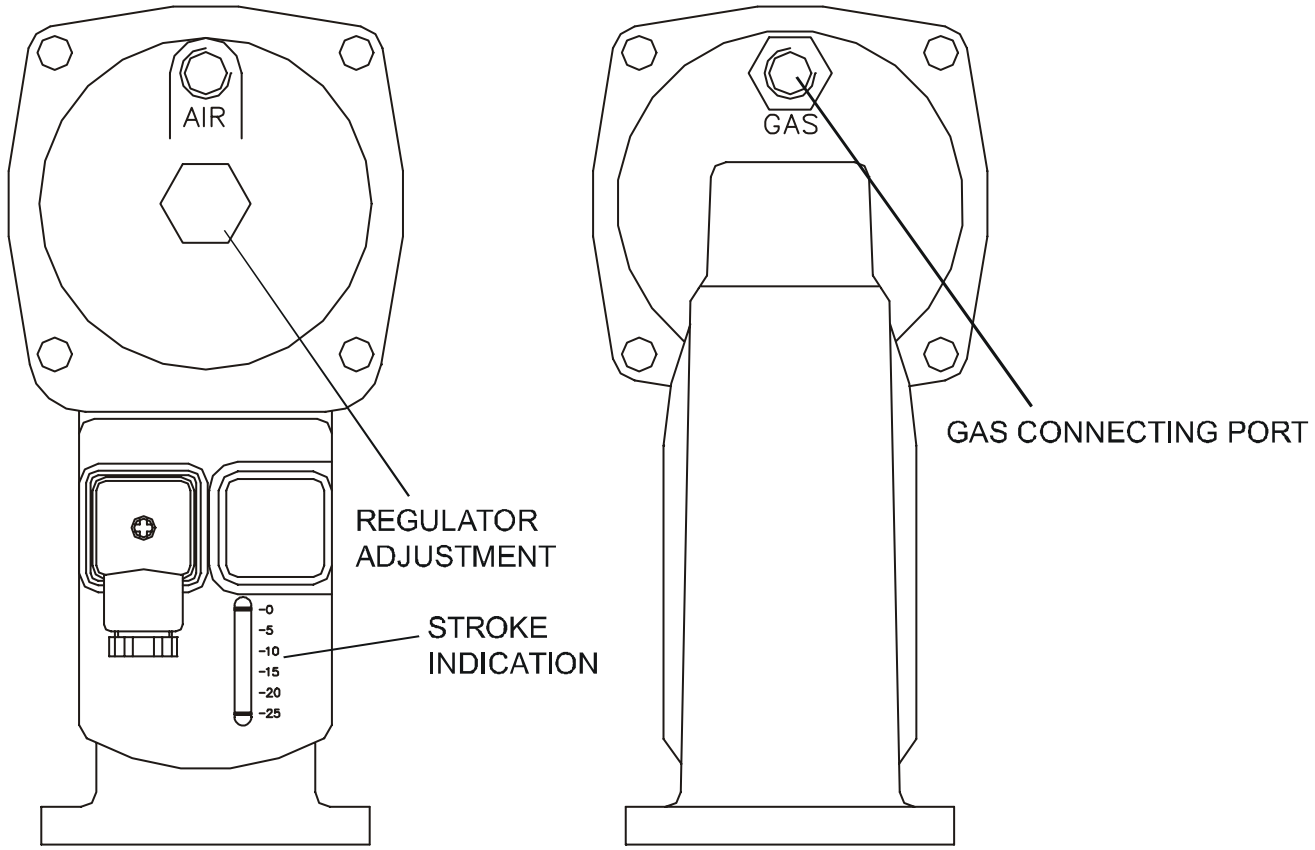

Controls

The control package is fitted on the left of the burner viewed from the rear. It includes a sequence control box of the cyclic or thermal type depending upon the application, a transformer and necessary contactors, terminal strip, motor starter, on/off switch and two neon lights. The amber light shows "BURNER ON" and the red light illuminates when the burner stops as a result of "EXCESS TEMPERATURE" in the appliance.

Flame Monitor

The flame probe (flame rectification probe) is located on the burner head and is required to supervise the safe operation of the burner under all working conditions. An ultraviolet cell is fitted as standard on the NGN25 & 35 burners.

Burner Operating Sequence

Single Stage (On/Off) Burners

The operating sequence begins with an air pre-purge on full air, then start rate gas flame which when proved allows the burner to operate on main flame, then to the "OFF" position after the heat input is satisfied. The operation is determined by demand of the appliance control instruments.

Two Stage (High/Low) Burners

The sequence begins with an air pre-purge on full air, followed by start rate gas flame which when proved allows the burner to operate on High/Low/Off. The operation is determined by the demand of the appliance control instruments.

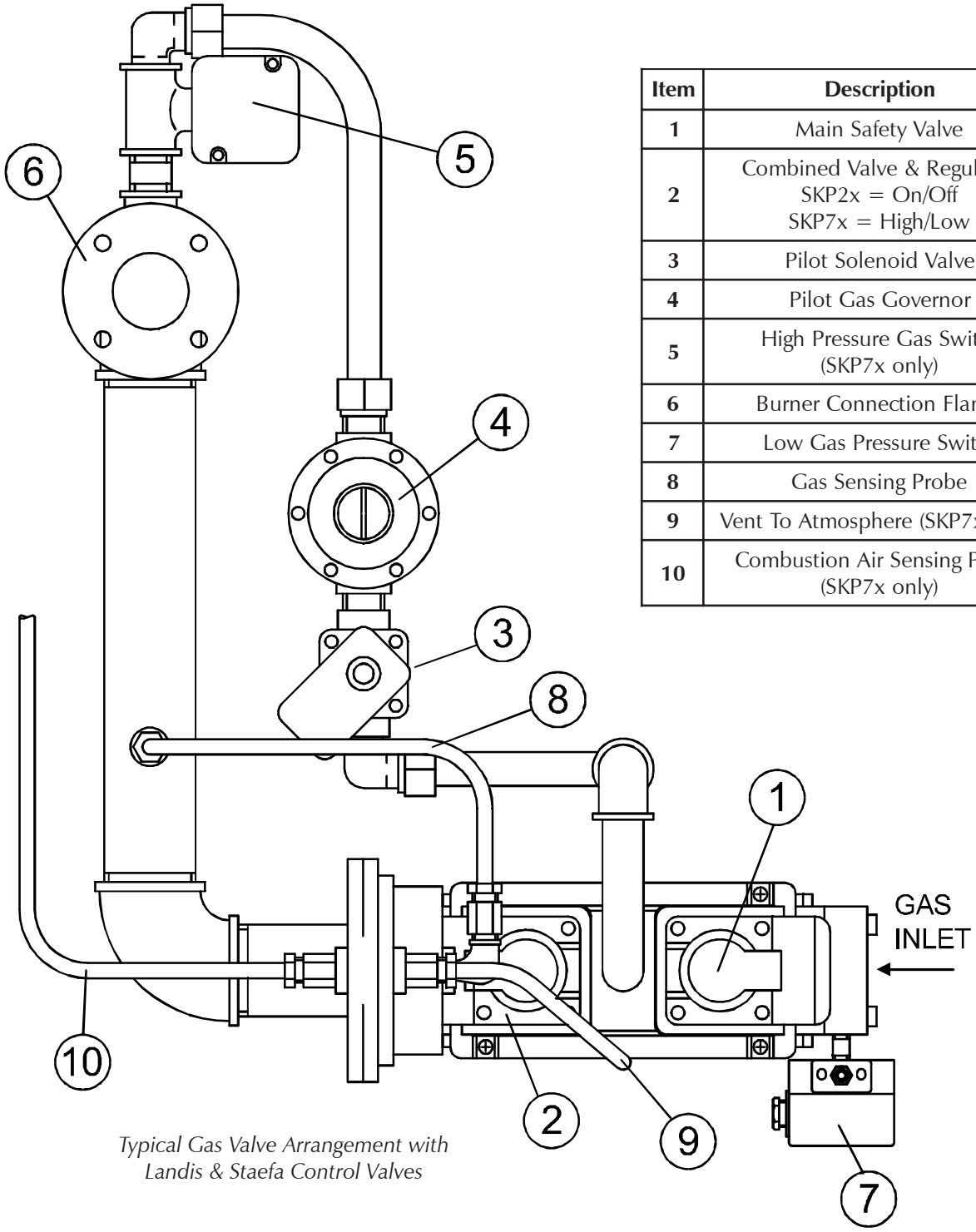

Item	Description
1	Main Safety Valve
2	Combined Valve & Regulator SKP2x = On/Off SKP7x = High/Low
3	Pilot Solenoid Valve
4	Pilot Gas Governor
5	High Pressure Gas Switch (SKP7x only)
6	Burner Connection Flange
7	Low Gas Pressure Switch
8	Gas Sensing Probe
9	Vent To Atmosphere (SKP7x only)
10	Combustion Air Sensing Probe (SKP7x only)

Typical Gas Valve Arrangement with Landis & Staefa Control Valves

Air/Gas Ratio Controller - Two Stage (High/Low)

The controller controls the gas pressure related to the pressure of the combustion air so that the gas to air ratio remains constant over the entire output range of the burner. When using the controller, a separate gas pressure governor is not required.

In installations with negative pressure in the combustion chamber, the air impulse pipe from the burner to air/gas ratio valve must always be under a positive pressure condition.

Initial Burner Setting - Two Stage (High/Low)

Remove the cover from the air damper motor on the end of the air inlet casing. Check and adjust the cam positions (refer to settings on page 15).

Air/Gas Ratio Controller

Remove the small plate on top of the regulator and keep it in a safe place. Set the air/gas ratio at 0.8 on the visual scale by adjusting the screw (1) anti-clockwise to increase, or clockwise to decrease.

Set the air/gas ratio on the visual scale, adjusting screw (2) to half a division on the '+' side of "0". Turn the adjusting screw clockwise to decrease., or anticlockwise to increase.

Start Rate Gas Governor (excluding NGN15 (On/Off))

Remove the metal cap from the top and turn the adjusting screw until it is approximately halfway between maximum and minimum setting, clockwise to increase, and anticlockwise to decrease. Never adjust to its maximum limit.

IMPORTANT - SAFETY

It is essential that the following instructions and adjustments are carried out by qualified engineers that are experienced in blown gas burner commissioning. In the U.K. it is a legal requirement that anyone working on gas installation as defined in the "Gas Safety (Installation & Use) Regulations 1994", is CORGI registered. The manufacturer cannot be held responsible for any consequential damage, loss or personal injury as a result of failure to follow these instructions, or as a result of misuse.

EMERGENCY INSTRUCTIONS

This product has been designed and constructed to meet all of the essential requirements of the GAS APPLIANCE DIRECTIVE 90/396/EEC and under normal circumstances should not give occasion to any hazardous conditions. If such a condition should occur during commissioning or subsequent use of this product, be it a fault of the burner, the appliance or of any instrument, machine or service in the proximity of the burner, then the GAS and ELECTRICITY supply to the burner should be **IMMEDIATELY ISOLATED** until such time that the fault has been investigated and rectified.

Control Panel Links

The following procedures require access to three links found inside the control panel. Switch off the electricity supply to the burner and open the control panel cover to access the links, they are marked as follows.

Link	Description
PCL	Pilot Check Link
LFC	Low Flame Check
FSC	Flame Signal Check

Burner Dry Run

Check both gas and electricity supplies to the burner are turned off. Remove the cover and fit a link between terminals 2 & 3 of the low gas pressure switch. Remove the control panel cover and open the low flame hold link (two stage burners). Set the air pressure switch to minimum. Replace the control panel cover. Momentarily switch on the burner and check the motor rotation, which should be anticlockwise, viewed from the motor end.

If the direction of rotation is incorrect, please refer to *Fault Finding* to correct it. Switch on the burner. Depending on the type of the control box, the burner will go through its operating sequence

a) Immediately if it has previously been working but switched off during a normal operating cycle.

b) On pressing the reset button on the control box.

The burner motor will run. If at this stage the burner goes to lockout, please refer to page 26, *Starting Flame Failure Without Ignition*.

Check that the ignition spark is present. For actual timings refer to the *Sequence Diagram and Timing Chart* on page 21.

If at this stage there is no ignition spark and the burner goes to lockout, the air pressure switch may require adjustment. Following the safety lockout time (T3) the ignition spark should cease and the burner go to lockout.

Switch off the electrical supply to the Burner. Remove the Control Panel cover and close the Low Flame Hold link. Replace the Control Panel cover. Remove the temporary link between terminals 2 & 3 of the Low Gas pressure switch and refit and secure the cover.

Safety system proved. Burner commissioning can proceed. Switch off power to the burner.

Burner Live Run - Commissioning

Re-check that the electrical wiring is complete and complies with all Codes and Standards. Check fuses are fitted and correctly sized.

Re-check that the gas pipework is correctly installed and leakproof.

Check that the appliance is in a proper and safe state to be fired (for instance, is there water in the boiler?) Set the appliance controls to call for heat.

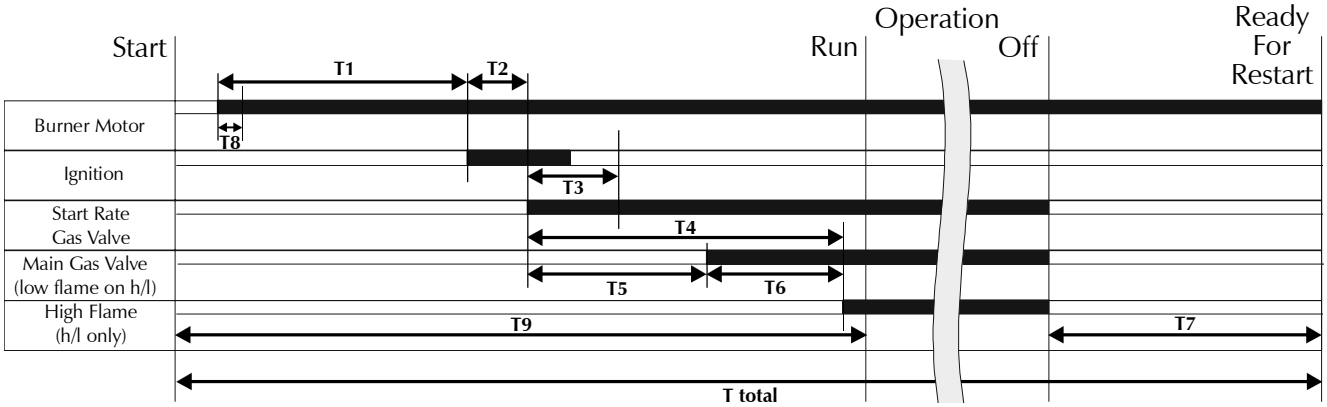

Sequence Phase	Controller Type					Sequence Description
	DMG 970	MMI 810	LGB21	TMG7-40-3	LFL 1.333	
T1	40	40	30	40	40	Combustion Air Pre-purge
T2	3	4	2	4	6	Pre-ignition
T3	3	3	3	3	3	Safety Lockout Time
T4	12.5	10	8			Delay - Start Rate to Main Flame
T5				9	12	Delay - Start Rate to Low Flame
T6				6	12	Delay - Low Flame to High Flame
T7				10	18	Combustion Air Post-purge
T8	5	5	5	8	12	Air Pressure Switch Interlock
T9	63.5	57	56	80	91	Total Start Time
T Total	63.5	57	56	90	106	Total Cycle Time of Controller

Note: The pre-purge times shown refer to the control box only. The air damper control will extend the total burner purge time up to 127 seconds depending upon the firing rate and air requirements of the appliance.

Sequence Diagram and Timing Chart

Check For Valve Closure.

All gas train assemblies are fully tested for function and valve security before despatch. A test of the gas valves is difficult without specialised testing equipment. However, the following check can be performed to test the security of the valve system.

Ensure the gas supply pipework to the burner gas line inlet is sound and gas is available at the required inlet pressure for the burner. Fit a manometer to the test point at the inlet to the upstream main safety valve. Open the main upstream manual valve for a few seconds, then close and secure the gas supply.

The space between the upstream manual valve and the gas train inlet should now be filled with gas at inlet pressure. If the pressure remains stable over one minute then this indicates that the valve train is secure, but not necessarily in the main valve. If the pressure decreases then this indicates that the main and one other valve is leaking or that there is a leak between the upstream manual valve and the main gas valve.

Secure the upstream test point and fit the manometer to the test point situated between the main and control valves. Check the reading on the manometer, this should now show near atmospheric pressure. Open the upstream manual valve and look for an increase in pressure over one minute. If no rise is detected, this indicates that the main valve is closing correctly.

The next stage of the procedure requires the burner to be momentarily started. Open the upstream manual valve and switch the burner on. The burner will attempt to start and will either establish a flame (in which case switch the burner off immediately) or 'lockout'. Isolate the electricity supply.

The space between the main and control valves should be filled with gas at near inlet pressure. If the pressure remains stable over one minute, this indicates that the valve system is secure.

If the pressure decreases, this indicates that there is a leak in the valve system and the valve train assembly should be returned to the factory for a full examination. Remove the manometer and close the test point.

Natural Gas Supply Pressures

Refer to the gas supply pressure graphs on pages 30-33 of this manual. The supply pressure must not exceed 100mb on all burners. All pressure quotes are running pressures, not static.

Fit a manometer or other approved pressure measuring instrument at the test point on the upstream side of the first safety shut-off valve. Open the main isolating manual gas valve. Check there is adequate gas pressure to enable commissioning to proceed.

Establishing Main Flame

Measuring Gas Flow

These sections refer to the individual commissioning procedures for each type of gas valve. Reference is made to checking flow rates at the gas meter. This is the most accurate way of determining throughputs and should be used whenever possible.

Information regarding the burner head gas pressures is shown on pages 30 to 33. These are intended as a guide to initial burner settings, but should not be relied upon to offer proof of actual throughputs.

IMPORTANT After each adjustment, gas flow rate and flue gas analysis should be checked.

ALWAYS use approved test equipment.

NEVER rely on a visual inspection of the flame as a guide to combustion quality.

Dungs Multibloc (NGN15 On/Off)

Refer to *Valve Adjustment Diagram A* on page 16.

Set the air control damper in an approximate position for the firing rate. This can be determined by setting the damper at the same proportion as the firing rate lies in relation to the performance graph on page 30.

With a screwdriver slacken the cheesehead screw on the main gas adjuster (C) and turn the fluted knob clockwise to give minimum gas flow rate. Set the gas inlet pressure switch to minimum.

Note: Should the burner lockout when establishing start and main flames then the probable cause is air or inert gas in the gas line. This can be removed by purging the line through the pressure test points located on the gas multibloc. Alternatively, there may be insufficient pressure on the gas governor.

Switch the burner on and allow it to establish main flame. Slowly turn the main gas adjuster (C) anticlockwise to the fully open position. Keep a watchful eye on the CO content during this stage and make adjustments to the air damper setting if the CO content becomes excessive. It is possible at this stage that the burner may be overfiring the appliance with a resultant excess of CO.

Check the gas throughput at the gas meter. Ensure that other appliances served by the same meter are isolated when gas throughputs are being adjusted.

With a screwdriver slowly adjust the gas governor (A) to increase or decrease the gas volume through the burner to the rate required for the appliance. The adjuster is turned clockwise to increase throughput.

With the gas flow rate set and the burner running with a stable flame, a full flue gas analysis can be performed.

Make adjustments to the air and gas settings to give the required combustion analysis whilst the burner is running on main flame.

Landis & Staefa SKP2x (NGN25 & 35 On/Off)

Refer to *Valve Adjustment Diagram* on page 18.

Set the air control damper in an approximate position for the firing rate, by setting the damper at the same proportion as the firing rate lies in relation to the performance graph on pages 32 & 33.

Close the upstream manual valve until it reaches an opening of approximately 20%. Set the gas inlet pressure switch to minimum. Switch the burner on and allow it to establish main flame.

Gradually open the upstream manual valve fully keeping watch on the CO level. If the CO content is excessive, adjust the gas regulator in the face of the SKP2x or the air damper setting. It is possible at this stage that the burner may be overfiring the appliance with a resultant excess of CO.

Check the gas flow rate at the meter. Ensure other appliances served by the same meter are isolated during these checks. Gradually alter the gas rate by turning the gas regulator screw on the face of the SKP2x governor to satisfy the appliance rating. Adjust the combustion air damper as necessary to keep the CO content in check.

With the gas flow rate set and the burner running with a stable flame, a full flue gas analysis can be performed.

Make adjustments to the air and gas settings to give the required combustion analysis whilst the burner is running on main flame.

Landis & Staefa SKP7x High/Low Burners.

Refer to the *Valve Adjustment Diagram* on page 17. Set up the air damper for initial firing as follows. Low flame air 15 °: High flame air 60°. Close the upstream manual valve until it reaches an opening of approximately 20%.

Set the gas inlet pressure switch to minimum. Open the low flame check link. Switch the burner on and allow it to establish low flame. Gradually open the upstream manual valve to the fully open position keeping a watchful eye on the CO level.

If the CO content is excessive, adjust the low fire adjustment screw (2) on the SKP7x valve to achieve acceptable figures. In extreme cases it is possible to run out of adjustment on the low fire screw without achieving the desired results. If this happens adjust the High Fire setting screw (1) to bring the CO content down to an acceptable level.

Switch the burner off and close the low flame check link. Restart the burner. Low flame will be established, expanding to main flame after the expiry of period T6 on the control box timing chart.

It is important to monitor the flame visually during the change from low to high. If the flame becomes more compact, this indicates an excess of combustion air. If the flame becomes large and shapeless, this indicates an excess of fuel.

Both conditions are acceptable at this stage providing that the burner remains stable and immediate actions are taken to correct the situation. If in doubt *switch off* the burner and adjust the High Flame screw (1) on the SKP7x in the appropriate direction.

With the burner stable on high flame, adjust the High Flame screw (1) to bring the CO_2 to an acceptable figure. It is possible at this stage that the burner may be overfiring the appliance with a resultant excess of CO.

With the burner firing at low flame, adjust the Low Flame screw (2) on the SKP7x valve to bring the CO_2 content to an acceptable figure.

Adjustment of the Low Flame setting will have marginal effect on High Flame. To achieve optimal results repeat the above procedures on High and Low flame several times until acceptable figures are obtained without any further adjustment.

It should not be necessary to make any further adjustments to the gas valve.

With the burner now running on high flame, the gas throughput should be checked at the gas meter. Ensure that any other appliances served by the meter are isolated during the checks. The gas rate can be altered by adjusting the air damper opening in the appropriate direction. Similarly the low flame throughput can be adjusted by altering the low flame position of the air damper. Care should be taken so as not to exceed the limits of the burner performance envelope as shown on pages 31-33.

With the gas flow rate set for both Low & High flame a final check should be made on the flue gases to ensure they remain within acceptable limits.

Burner Start Gas Rate

Switch off the electrical supply to the burner, remove the control panel cover, open the pilot check link, and replace control panel cover.

Switch on the electrical supply to the burner and allow the burner to establish start rate flame.

The start gas rate can now be adjusted by turning the adjusting screw in the start gas pressure governor clockwise to increase and anticlockwise to decrease (SKP 2x & SKP 7x valve systems). Refer to *Valve Adjustment Diagram* on page 16 for Dungs Multibloc.

A start rate of approximately 25% is required of Main Flame (On/Off burners) or High Flame (High/Low burners)

Ensure that the start gas rate does not exceed 30% of the high flame gas rate as measured at the gas meter.

Too small a start gas rate will result in burner lockout on changeover during the initial and final running.

Switch off the electrical supply, remove the control panel cover, close the pilot check link, replace the control panel cover. Open the main manual gas valve.

Switch on the electrical supply to the burner.

Check Flame Signal

Switch off the burner. Remove the control panel cover and open the flame signal check link.

Connect a DC. microammeter with a range of 0-10μA / 0-100μA to the test points either side of the opened link.

Switch on the burner and observe the flame response signal on the microammeter. A steady reading in excess of 7μA (probe) or 15μA (UV cell) indicates that the burner is in a reliable run situation.

If the current recorded is too low, it may be due to some maladjustment of the flame and intermittent lockout may occur. Check and reset if necessary. Refer to the *Fault Finding* section. Switch off the burner and disconnect the microammeter. Close the flame signal check link and control panel cover.

Air Pressure Switch Setting

Switch off the electrical supply to the burner.

Remove the air pressure switch cover. Fit a manometer to the pressure switch to check the actual air pressure against the pressure switch dial setting.

Remove the control panel cover and disconnect the low flame hold link to hold the burner in the low flame position (two stage burners only).

Switch on the electrical supply and allow two stage burners to establish low flame and single stage burners to establish main flame.

Slowly turn the adjusting dial clockwise until the flame is extinguished. The burner will go to lockout.

Turn the dial one division anticlockwise and reset burner lockout. The burner will then continue through its cycle until either the start rate flame is established or the burner goes to its lockout position.

If the burner goes to lockout repeat the procedure once per burner cycle until the start rate flame is established.

Allow the burner to cycle to low flame (two stage) and main flame (single stage) and then turn the adjusting dial a further two divisions anticlockwise.

Switch off the electrical supply to the burner, reconnect the low flame hold link, replace the control panel cover and also the air pressure switch cover, and remove the manometer.

High Gas Pressure Switch Setting (High/Low only)

When the burner is finally commissioned, the gas switch must be adjusted with the burner running. Remove the cover, and move the dial in an anticlockwise direction until the switch trips and the pressure switch indicating light is illuminated (the burner will shut down). Move the pressure switch dial in a clockwise direction one division, fit the cover, and reset the pressure switch via the button situated on the pressure switch cover. The burner will now restart.

Low Gas Pressure Switch Setting

The low gas pressure switch is wired in series with the appliance controlling instruments and will cause the burner to effect a 'safety shut down' if a loss of inlet gas pressure is detected.

Isolate the burner and remove the gas pressure switch cover. Switch on the electrical supply and allow the burner to establish main flame.

Slowly turn the adjustment dial on the gas pressure switch clockwise until the flame is extinguished and the burner shuts down. Turn the dial slowly anticlockwise one division at a time until the burner restarts and establishes main flame.

Recheck the performance and then turn the dial a further two divisions anticlockwise. Switch off the burner and replace the gas pressure switch cover.

Final Check

Check that all the covers to components have been replaced and that locking devices are properly secured. Check that the appliance control instruments are set to safe limits.

Commissioning Is Now Complete

Switch on the electrical supply.

The burner will now operate until switched off: -

a) by controlling instruments of the appliance

b) manually

c) by power failure.

Upon restoration of power, the burner will restart automatically and follow sequence.

Routine Safety Checks

TO BE CARRIED OUT ONLY BY QUALIFIED AND EXPERIENCED PERSONNEL.

Check that the plant room is ventilated at all times.

Frequently inspect the air inlet of the burner and ensure that there are no obstructions to air flow.

Flame Detection System

Flame Probe (Flame Rectification Rod)

Switch off the electrical supply to the burner. Remove control panel cover and open the flame signal check link. Refit the control panel cover.

Switch on the electrical supply. Check that the burner locks out at the end of the ignition cycle.

Switch off the electrical supply. Remove control panel cover and close the flame signal check link. Replace the control panel cover and switch on the electrical supply. Reset lockout.

UV (Ultra-Violet) Cell

Switch off the power supply to the burner. Remove the UV cell from the burner casing and cover the quartz glass envelope to exclude any light. Do not touch the quartz glass with fingers.

Switch on the power supply. Check that the burner locks out at the end of the ignition cycle. Switch off the power supply. Replace UV cell switch on the power supply. Reset lockout.

Routine Maintenance

Switch off electrical supply and gas supply to the burner.

Combustion Air Fan

Clean the blades regularly with a stiff brush. Access is obtained through the burner top cover. Care should be taken to avoid damaging the fan blades. Check that the air inlet into the fan is clean.

Inner Assembly

Open the hinged extension as follows:-

Remove the gas train multi-pin plug from its socket on the control package (Landis & Staefa) or the DIN plugs from the valve block itself (Dungs).

Remove the split-pin from the base of hinge-pin adjacent to the gas train and withdraw the hinge-pin from the hinged extension.

Open the hinged extension, disconnect the ignition electrode H.T. lead and if fitted the flame probe lead.

Remove the cap head screw securing the inner assembly gas pipe to its manifold, note that the earth lead for the ionisation probe is also fitted to this point. Carefully withdraw the inner assembly from the hinged extension.

Air Diffuser And Gas Nozzle

Clean using a stiff brush.

Ignition Electrode

Clean and check the electrode is not cracked or worn. Renew if necessary.

Check the settings of the ignition electrode and flame rectification probe, and reset if necessary. Replace all components and covers, and secure all fittings. The burner is now ready for operation. Switch on the electricity supply and gas supply to the burner.

Replacement of Control Valves SKP2x, SKP7x and Dungs Multibloc

Should any of the above valves require replacing due to mechanical or electrical failure, then the burner will require re-commissioning to restore the proper combustion and performance values. It is essential that replacement of these components and re-commissioning of the burner be undertaken only by qualified combustion engineers.

Fault Finding

Any modifications to the installation or component settings resulting from actions suggested below may require the re-establishment of the various settings as indicated earlier in this manual.

Burner Motor Fails To Start

Check:

- that the electrical supply is available and the burner is correctly wired.
- all fuses for continuity and size.
- all control instruments are “calling for heat”.
- the gas train is electrically connected.

- the control box is not locked out (e.g. signal lamp faulty). (If the control box is locked out, press the reset button).
- there is sufficient gas pressure.
- the burner probe is not earthed.
- the air pressure switch is in the "start" position, as follows: -

a) Switch off the electrical supply. Remove the plug-in assembly from the control box base. Check for an open circuit between the following terminals:

Satronic MMI / MMG - Terminals 5 & 7

Satronic DMG - Terminals 4 & 7

If there is continuity between terminals, turn the dial on the air pressure switch fully anticlockwise to the minimum setting.

If there is now an open circuit, the air pressure switch is in order, otherwise the air pressure switch is faulty and must be renewed.

b) Remove the plug-in assembly from the control box base. Check for continuity between the following terminals:

Satronic TMG 740 - Terminals 17 & 16

Landis & Staefa LFL 1.333 - Terminals 4 & 13

Landis & Staefa LGB - Terminals 3 & 6

If the air pressure switch is not in the start position, turn the setting dial clockwise. If no continuity is obtained, the air pressure switch is faulty and must be renewed.

Starting Flame Failure Without Ignition

Check:

- The glass envelope of the U.V. cell is clean and correctly positioned.
- The U.V. cell and its wiring.
- The air pressure switch is set correctly.
- The electrode is correctly set and the porcelain is not cracked.
- The ignition transformer is not faulty.
- The control box is not faulty.

Starting Flame Failure Without Flame

If the start rate flame is not properly established, the safety circuit of the sequence controller will cause lockout in one second.

The cause may be insufficient signal to the flame detection device. Alternatively the flame signal check link has been removed, or insufficient gas to allow the flame monitoring device to take over and signal the sequence controller to continue its cycle.

This may be remedied by adjusting the fast initial lift of the downstream safety valve.

If an Ionisation Probe is fitted in place of the U.V. cell check:

- The probe is correctly positioned.
- For bad earth continuity/faulty wiring.
- The ignition tranformer for crossed polarity.
- The Test Link has been closed.

Burner Fails To Establish Main Flame

Check:

- The low flame hold link has been closed.
- The gas valves are operating correctly.
- The combustion air is set correctly.
- There is sufficient gas.
- The control box is not faulty.

Burner Motor Only Runs Continuously

Check:

- That the air damper motor is correctly wired.
- That the air damper motor is not faulty.

Incorrect Rotation Of Burner Motor

Motor rotates clockwise viewed from the shaft end. If the burner motor rotation is incorrect, the single phase motor should be renewed. On three phase motors, interchange any two phases. In normal circumstances, this will correct the rotation.

Spare Parts Identification

Separate illustrated lists, containing an item number, description and code number, are included in this Section for the NGN15 - NGN35 Burners. The variations on a component are included and care must be taken when making any reference to a component to use the correct description and code number.

Combustion Head Details for NGN15

Item	Description
1	Burner Gas Nozzle
2	Burner Flame Tube
3	Diffuser Mounting Stud
4	Ignition Electrode
5	Inner Assembly Elbow
6	Diffuser Plate
7	Ionisation Probe (if fitted)
8	Probe Insulation Piece (if fitted)
9	Inner Assembly Sealing Ring
10	Inner Assembly Adaptor

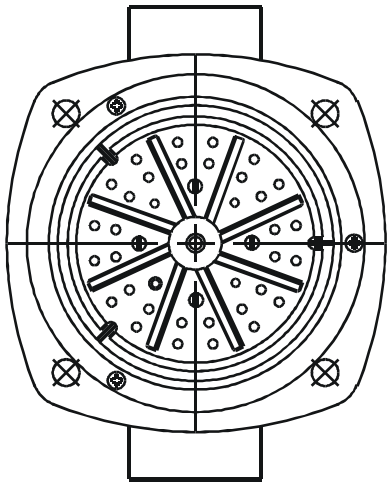

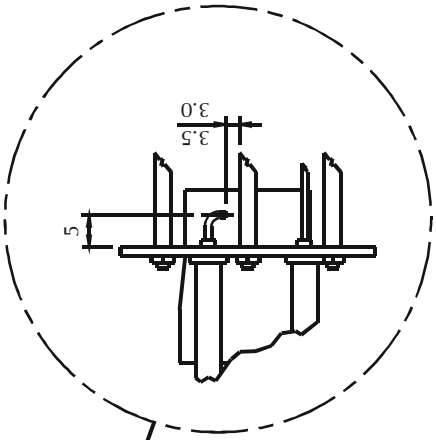

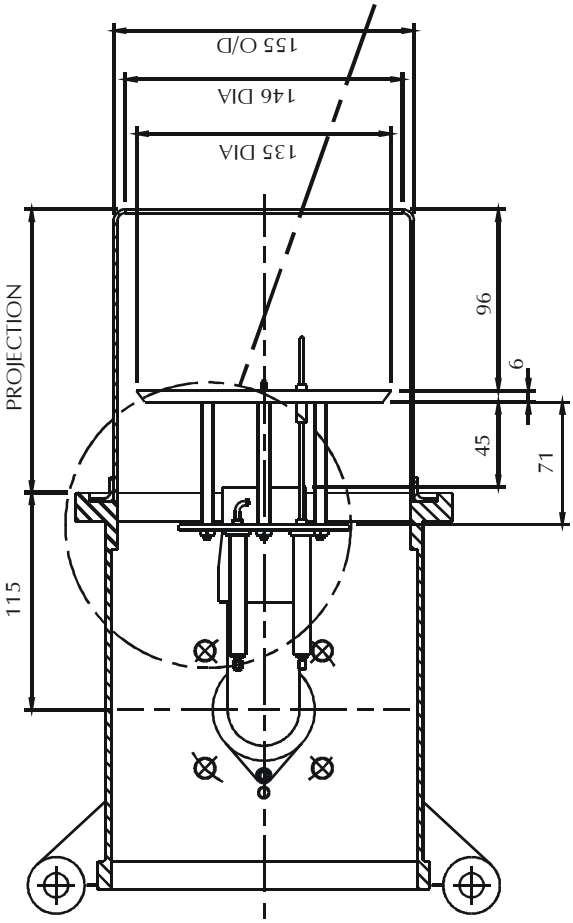

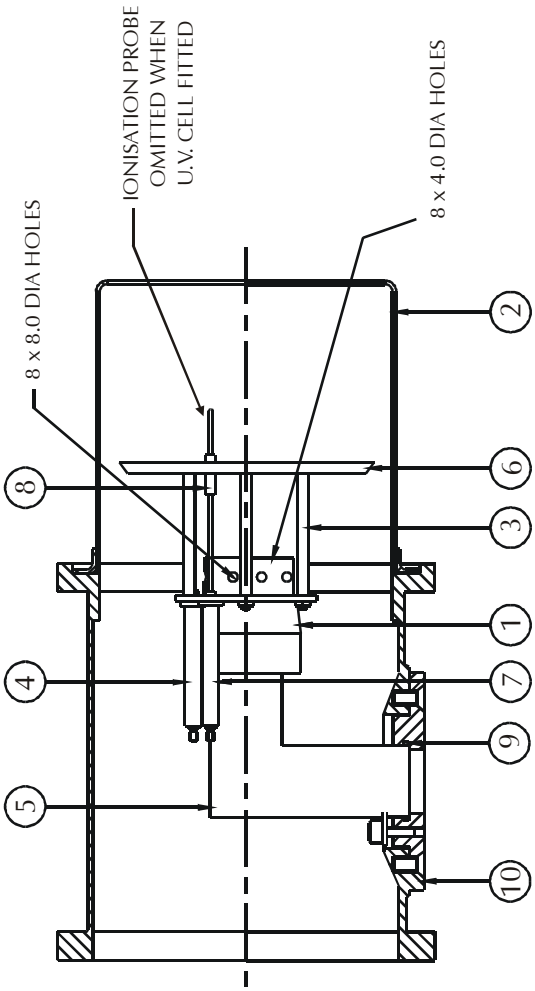

Combustion Head Details for NGN15(High/Low) & NGN25

Item	Description
1	Burner Gas Nozzle
2	Burner Flame Tube
3	Diffuser Mounting Stud
4	Ignition Electrode
5	Inner Assembly Elbow
6	Diffuser Plate
7	Ionisation Probe (if fitted)
8	Probe Insulation Piece (if fitted)
9	Inner Assembly Sealing Ring
10	Inner Assembly Adaptor

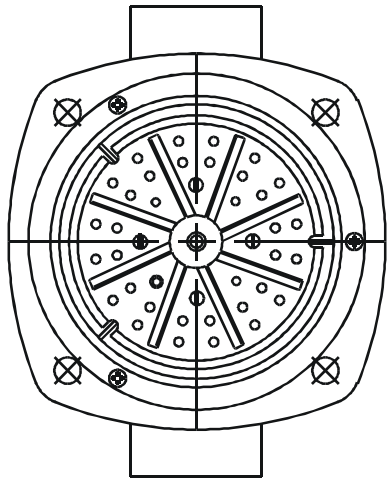

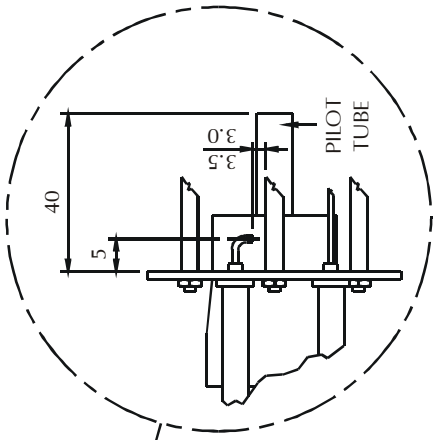

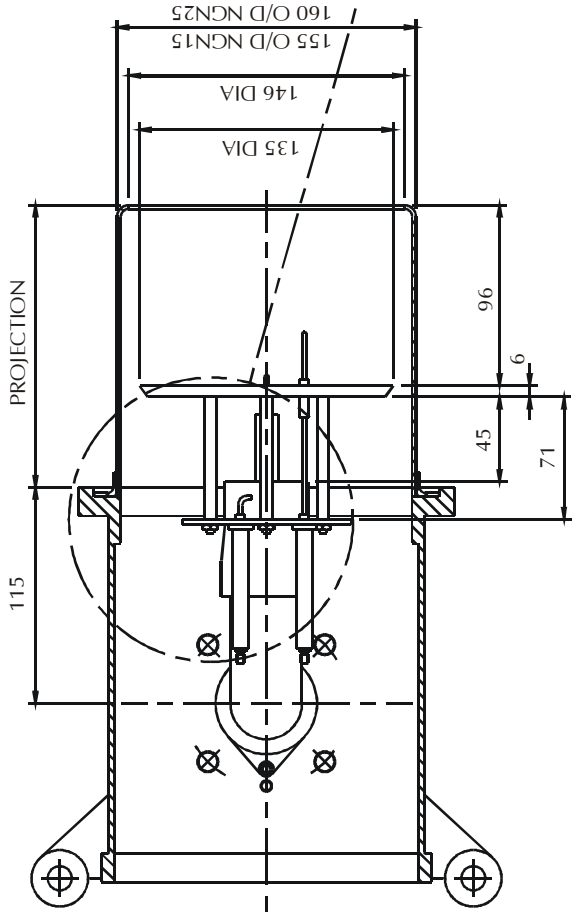

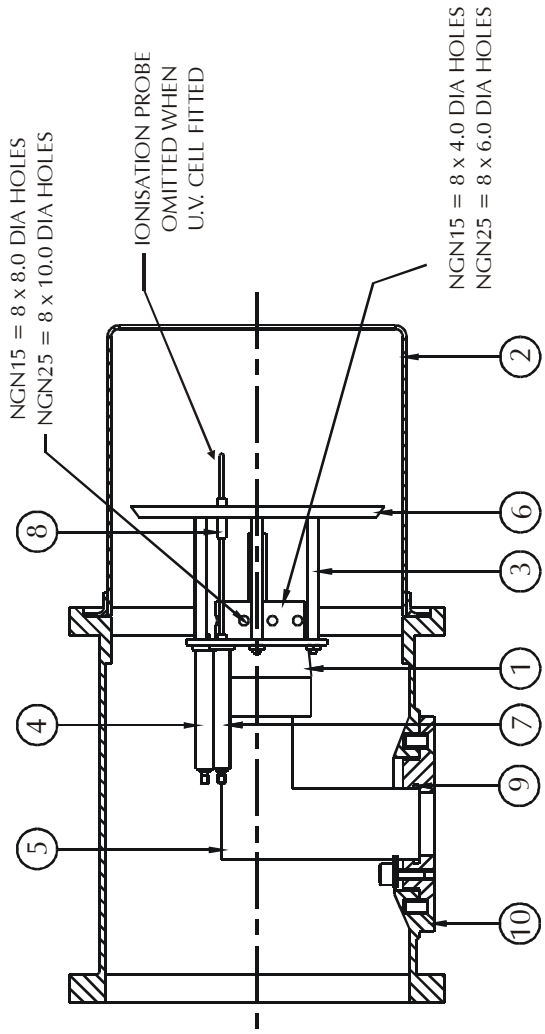

Combustion Head Details for NGN35

Item	Description
1	Burner Gas Nozzle
2	Burner Flame Tube
3	Diffuser Mounting Stud
4	Ignition Electrode
5	Inner Assembly Elbow
6	Diffuser Plate
7	Inner Assembly Sealing Ring
8	Inner Assembly Adaptor

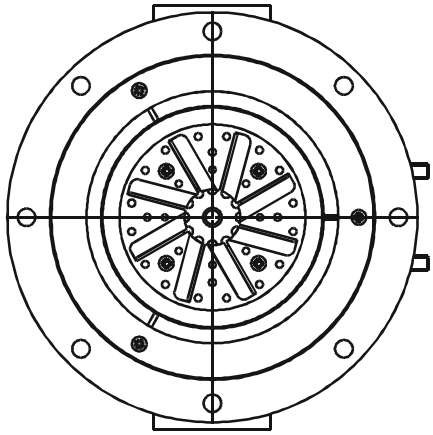

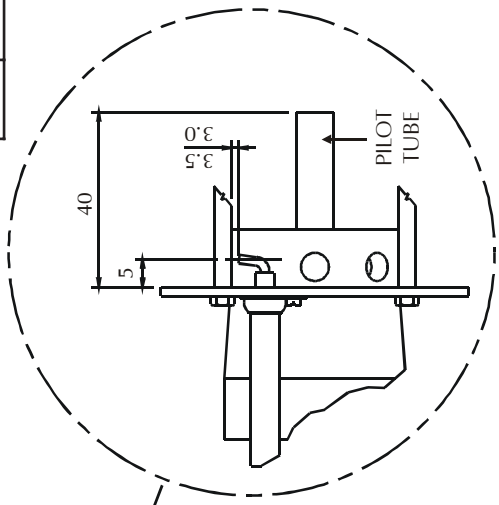

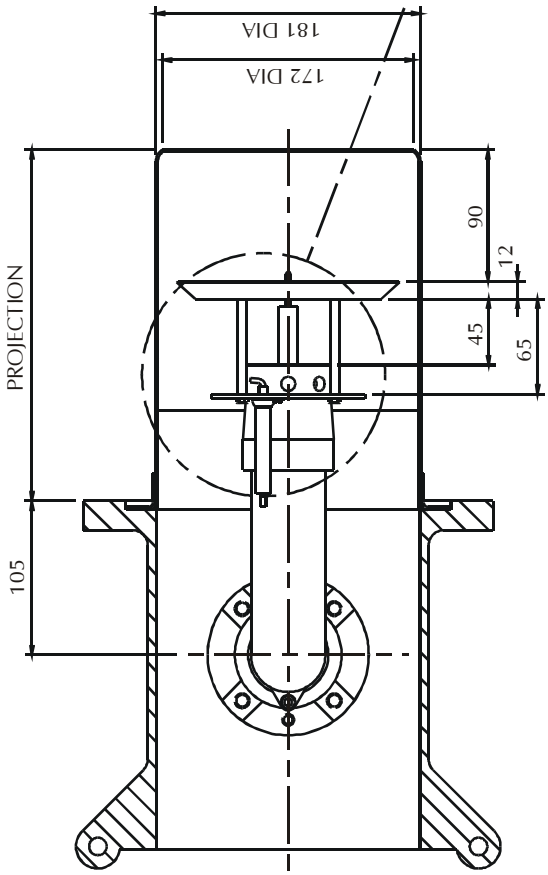

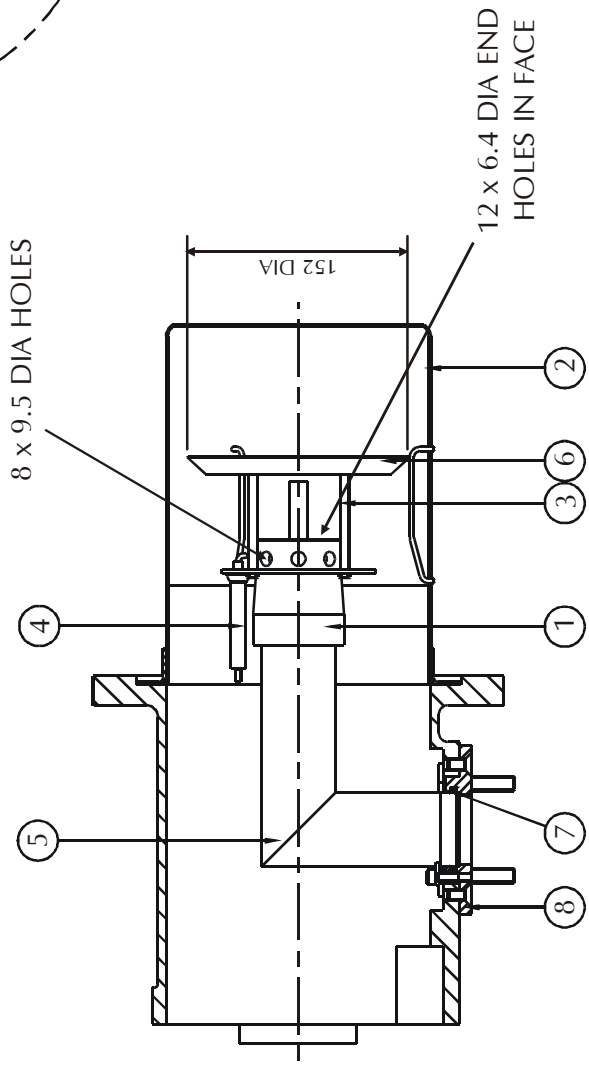

Gas Supply Pressure Graph for NGN15 with Dungs Control Train

The total minimum supply pressure is obtained by summing the combustion chamber resistance and the combined burner head and line loss. A further 2.5 mbar should be added to allow for manufacturing tolerances etc.

The burner output is based on a gross calorific value of natural gas of 38.56 MJ/m³

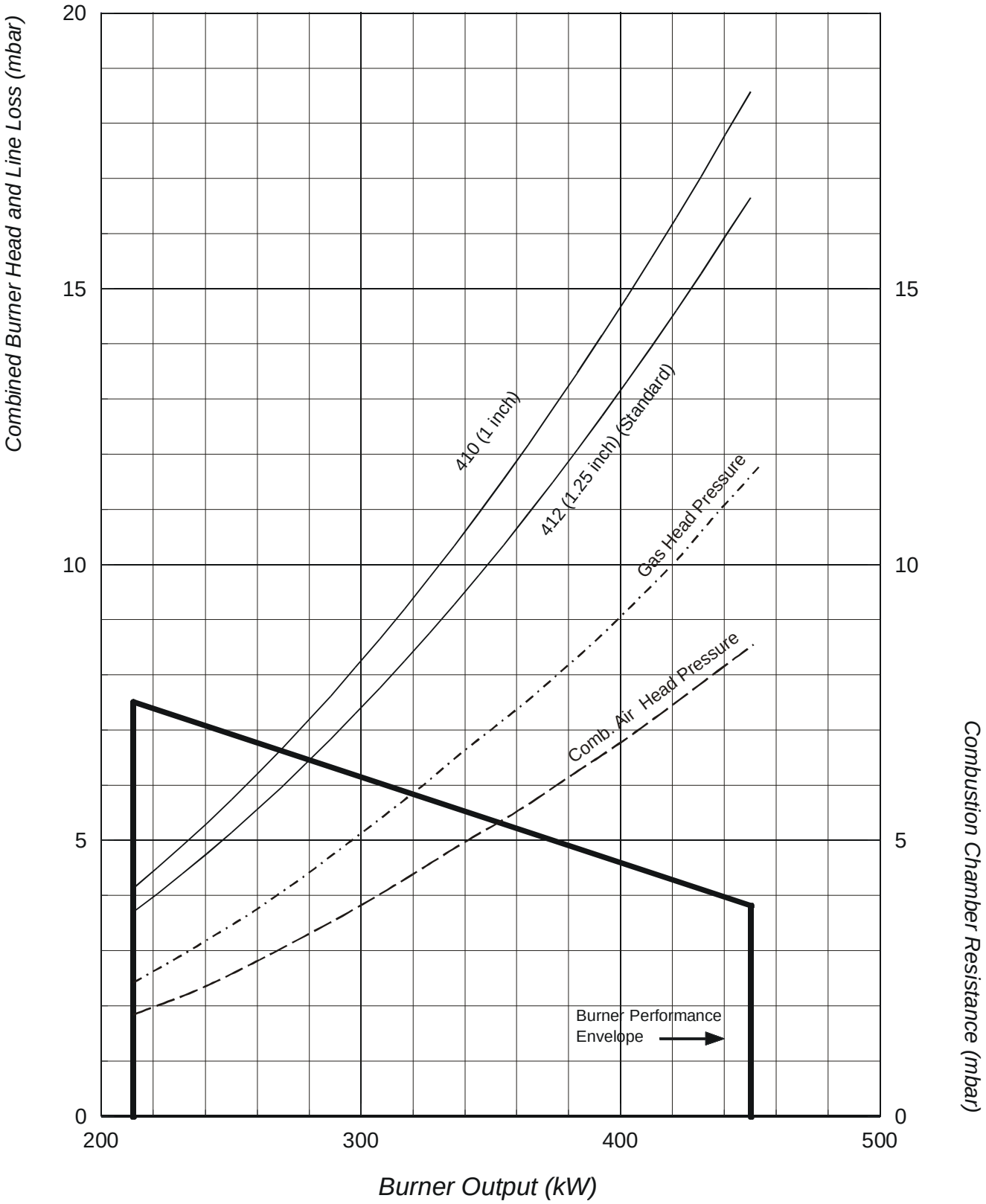

Gas Supply Pressure Graph for NGN15 with Landis & Staefa Control Train

The total minimum supply pressure is obtained by summing the combustion chamber resistance and the combined burner head and line loss. A further 2.5 mbar should be added to allow for manufacturing tolerances etc.

The burner output is based on a gross calorific value of natural gas of 38.56 MJ/m³

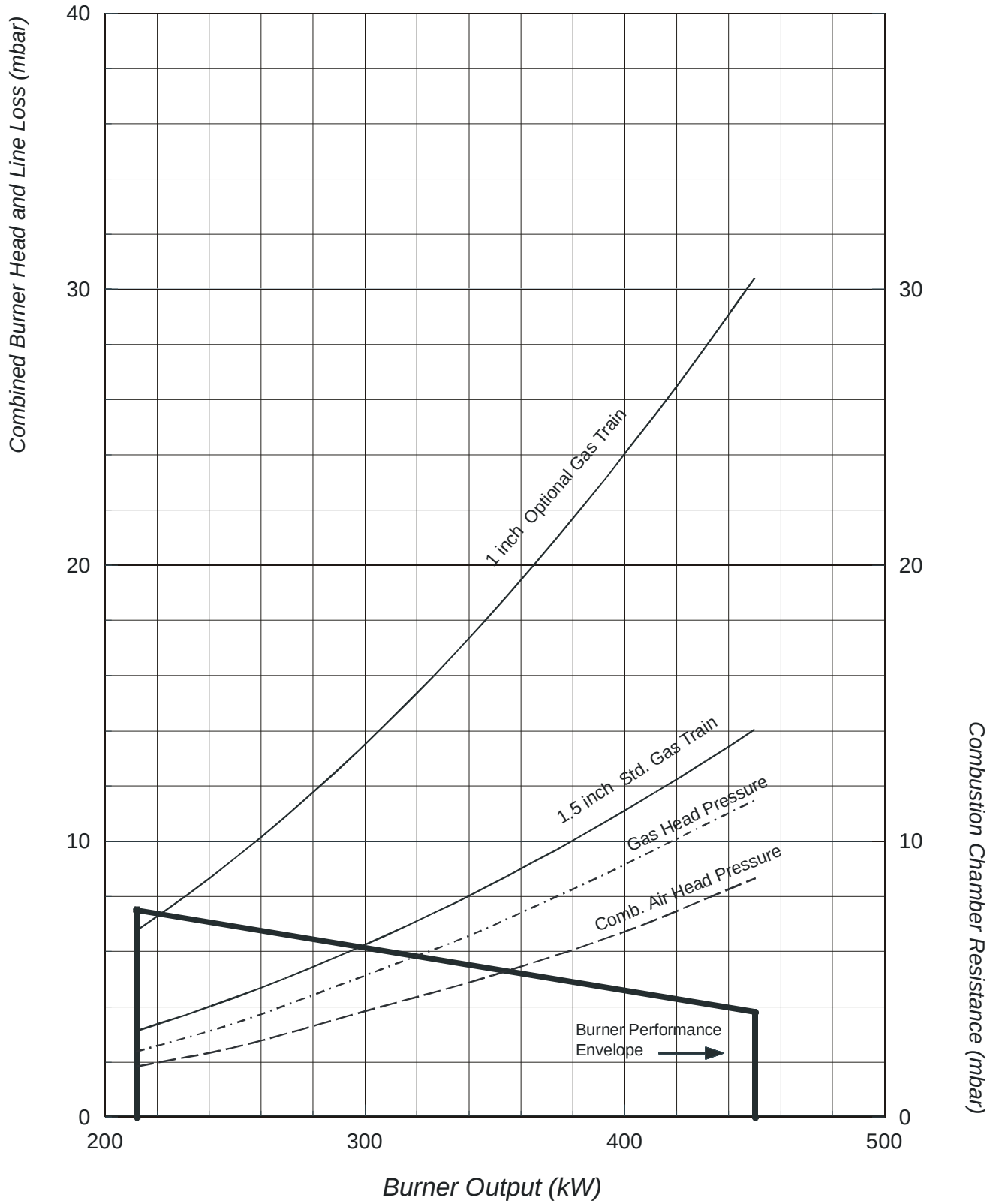

Gas Supply Pressure Graph for NGN25 with Landis & Staefa Control Train

The total minimum supply pressure is obtained by summing the combustion chamber resistance and the combined burner head and line loss. A further 2.5 mbar should be added to allow for manufacturing tolerances etc.

The burner output is based on a gross calorific value of natural gas of 38.56 MJ/m³

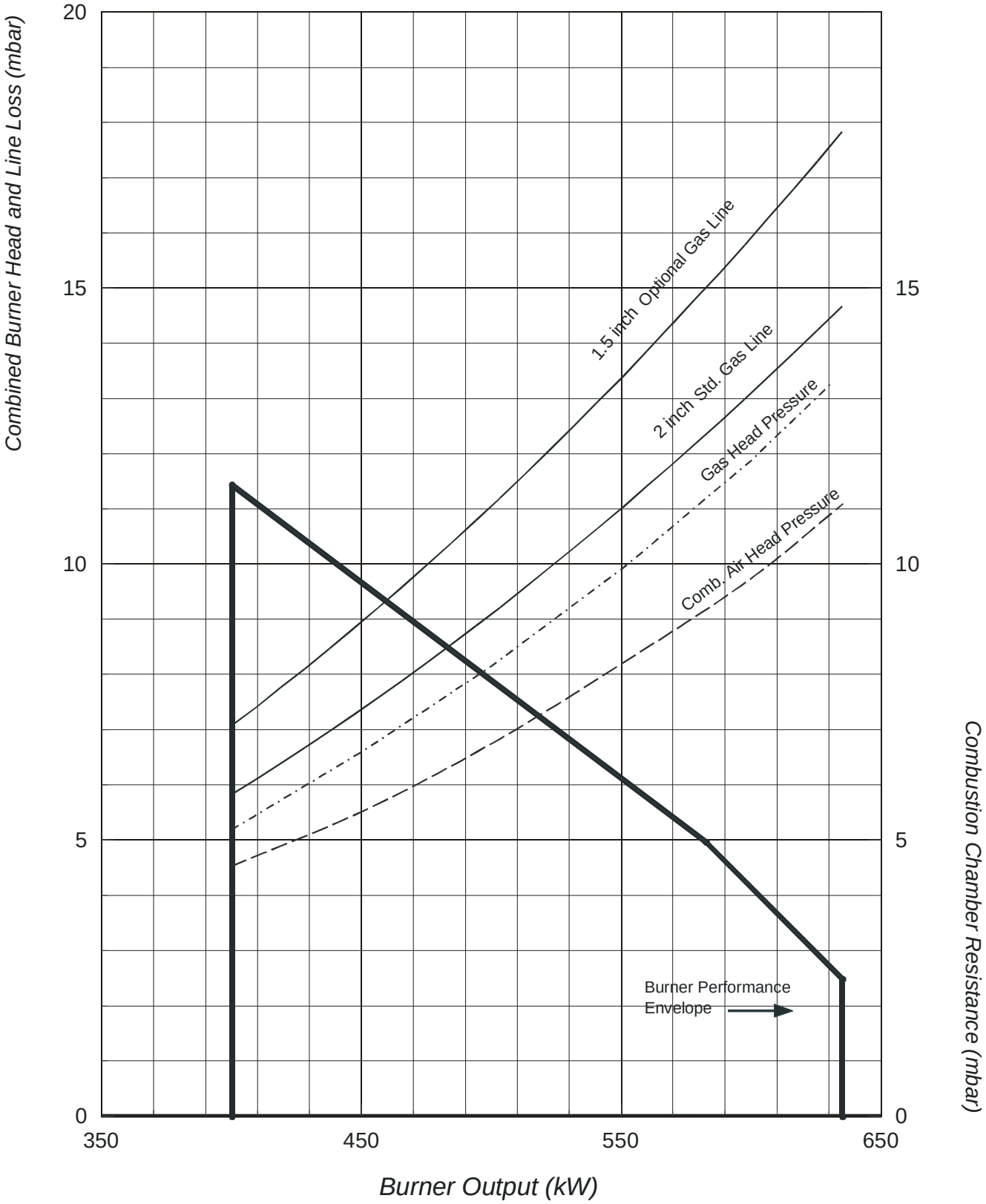

Gas Supply Pressure Graph for NGN35 with Landis & Staefa Control Train

The total minimum supply pressure is obtained by summing the combustion chamber resistance and the combined burner head and line loss. A further 2.5 mbar should be added to allow for manufacturing tolerances etc.

The burner output is based on a gross calorific value of natural gas of 38.56 MJ/m³

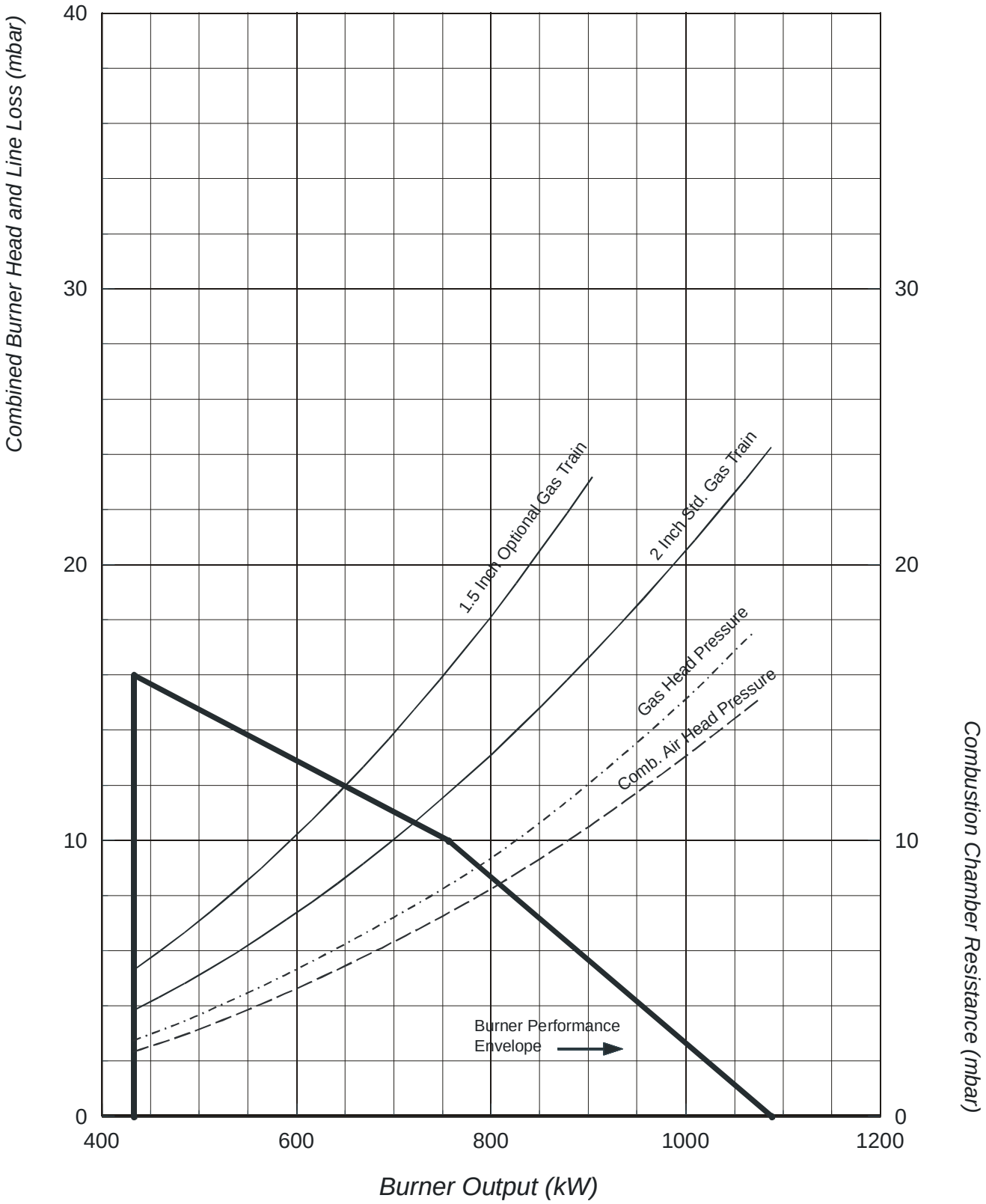

Commissioning Sheet

The details below are to be completed by the Commissioning Engineer

Installer's Name : _____

Address : _____

_____

_____

Site Address : _____

_____

_____

Appliance : Type : _____ Size : _____ Serial No. : _____

Burner : Type : _____ Size : _____ Serial No. : _____

Commissioning date : _____

Guarantee Expiry date : _____

Gas type : _____

Gas Pressure upstream of main gas governor :

a) Standing : _____ mbar b) Running : _____ mbar

Gas pressure at burner head	_____	mbar	_____	in.w.g.
Gas rate	_____	m^3	_____	ft^3/hr
Heat input	_____	MJ/hr	_____	Btu/h
CO	_____	%	_____	%
CO_2	_____	%	_____	%
Gross flue gas temperature	_____	°C	_____	°F
Ambient temperature	_____	°C	_____	°F
Nett flue gas temperature	_____	°C	_____	°F
Efficiency	_____	%	_____	%

Enertech Limited,
P O Box 1,
Vines Lane
Droitwich,
Worcestershire,
WR9 8NA

Tel: +44 (0) 1905 794331 **Fax:** +44 (0) 1905 794017
Email: info@nu-way.co.uk **Web:** www.nu-way.co.uk

NU-WAY®
Enertech Group