ENERGY SOLUTIONS

ST 50 Oil Burner

Installation & Maintenance Manual

spares & parts online IBASIS.CO.UK

NU-WAY

Enertech Group

spares & parts online
IBASIS.co.uk

178 078 15

Thank you for choosing a Nu-way burner. As you would expect from a Company who has a pedigree of more than 75 years in the heating industry, our after sales service is second to none.

Your relationship with Nu-way does not stop with the purchase of a burner. We have a team of highly experienced Service Engineers who travel throughout the UK and around the world, to service and react swiftly to breakdowns. Preventative maintenance is clearly the most cost effective way of ensuring that the burner is running at its most efficient, but also that business critical activities are not interupted with potentially costly breakdowns. A Nu-way Service contract is a cost effective way of ensuring the correct and most efficient output and reliability from your Nu-way burner is maintained at all times.

Nu-way Spares Department carry more than four thousand spares, all of which are available from stock at competitive prices. Nu-way has the largest range of commercial spares available to the market. Our Spares sales team collectively have more than 170 years employment with Nu-way and are therefore more than experienced in offering advice and practical backup, by ensuring the correct part is identified and despatched in a timely manner.

In addition to these departments we also offer a dedicated technical helpline which is manned during office hours. (Please note this is a premium rate line)

The Nu-way promise is that your investment in a Nu-way burner is fully supported throughout the life of the product.

Please call us to discuss how we can ensure you benefit from the many services we have to offer.

Burner Sales:	**01905 791640**
Service:	**01905 791680**
Spares:	**01905 791650**
Technical Helpline:	

DESCRIPTION

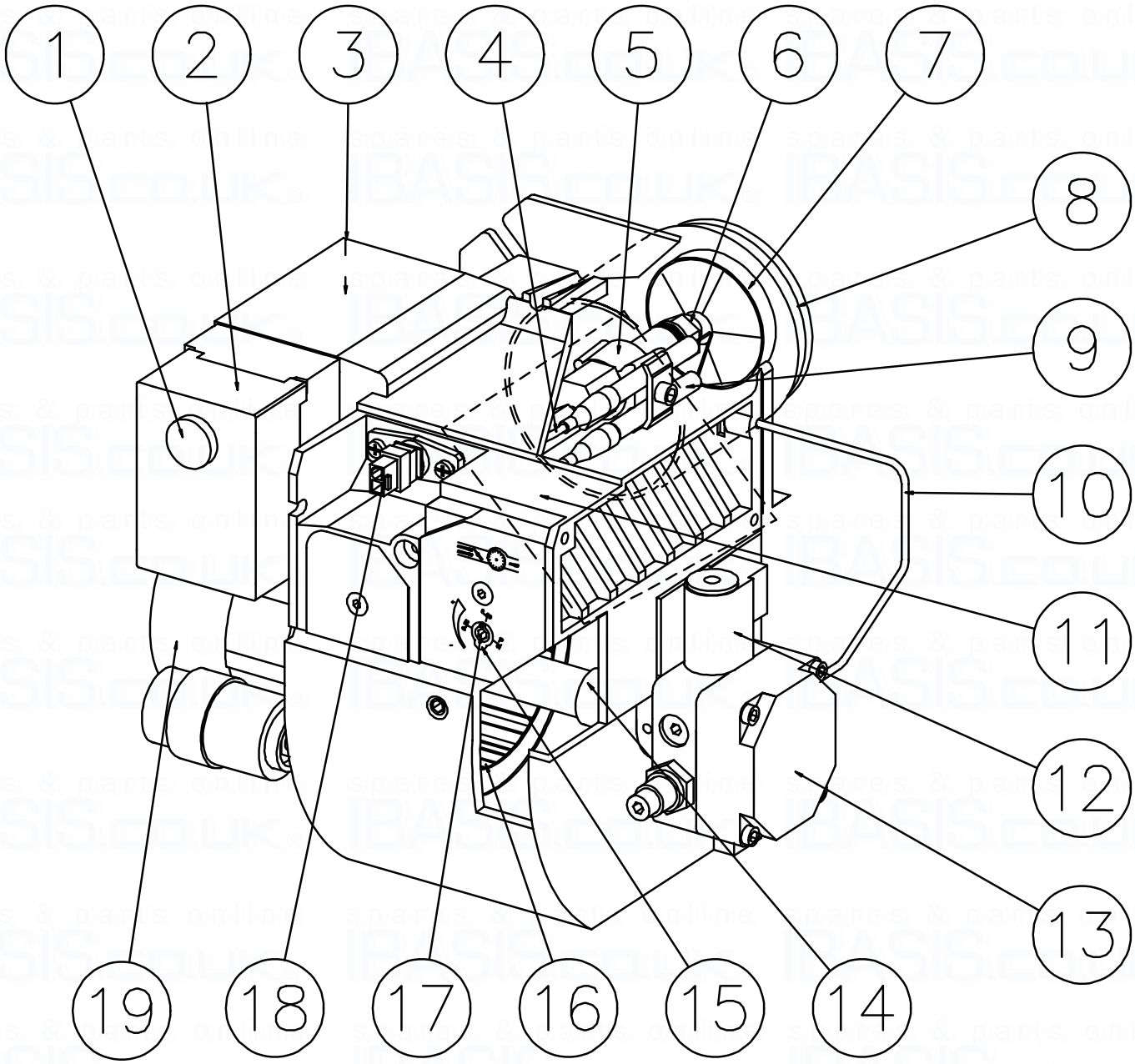

COMPONENTS

1. Reset button
2. Control box
3. Ignition transformer
4. Ignition cables
5. Nozzle assembly
6. Nozzle
7. Brake plate
8. Blast tube
9. Ignition electrodes
10. Connecting pipe
11. Air damper
12. Solenoid valve
13. Pump
14. Drive coupling
15. Indication, air damper
16. Fan wheel
17. Adjustment, air damper
18. Photoresistor
19. Motor

TECHNICAL DATA

ST 50

DIMENSIONS

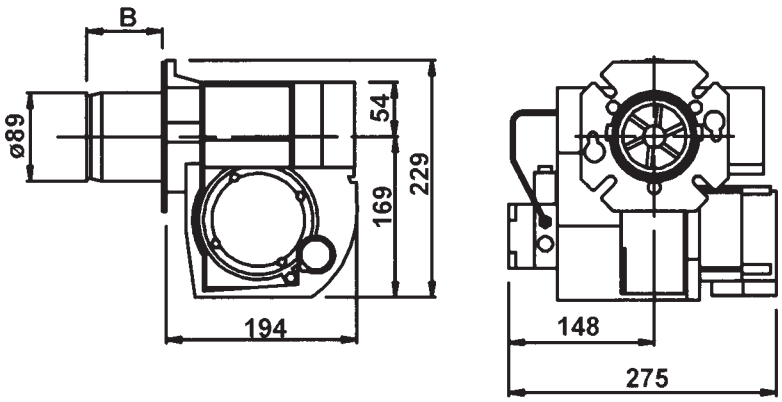

MOUNTING DETAILS

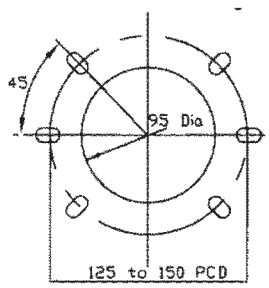

Drill & Tap 2 x M8 holes on the horizontal centre line or
4 x M8 holes at 45 degrees

Burner tube	Length of burner tube	Incl. flange A Measure B	Incl. flange B Measure B	Incl. flange C Measure B	Incl. flange D Measure B
KA Type	94	56	69	77	76
KA Type	147	109	122	130	129

OUTPUT RANGE AND NOZZLES RECOMMENDED

Oil capacity kg/hr.	Output kW	Output Btu/hr.	Recommended nozzle Angle	Recommended nozzle Type	Recommended pump pressure Bar
2.0 - 5.6	24 - 66.4	82000 - 226,500	60°, 80°	H, S	10

Calculated with calorific value of 11.86 kWh = 1 kg oil

RECOMMENDED NOZZLE

Because of different boiler types existing on the market, with varying combustion chamber designs, it is not possible to state a definite spray angle or spray pattern.

Note that the spray angle and the spray pattern change with the pump pressure.

ELECTRODE ADJUSTMENT

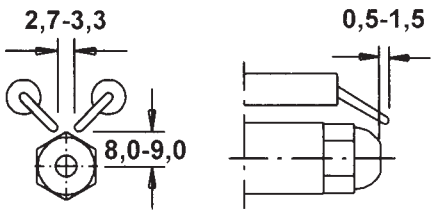

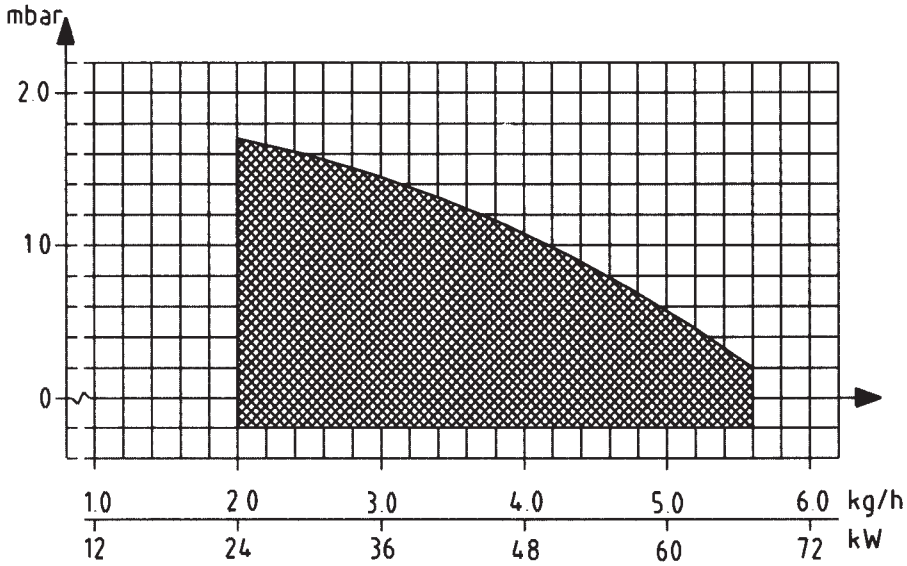

TECHNICAL DATA
DIMENSIONS

Flange A

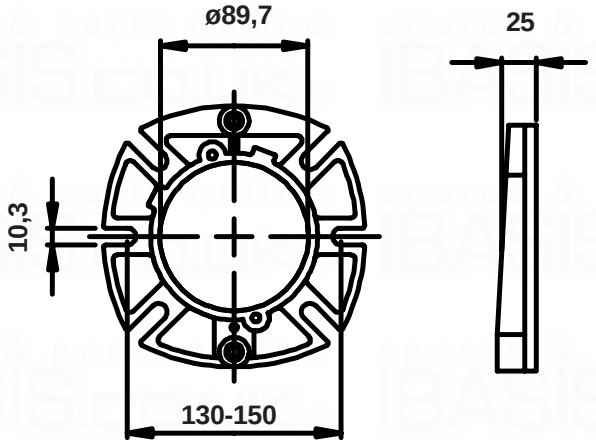

Flange C

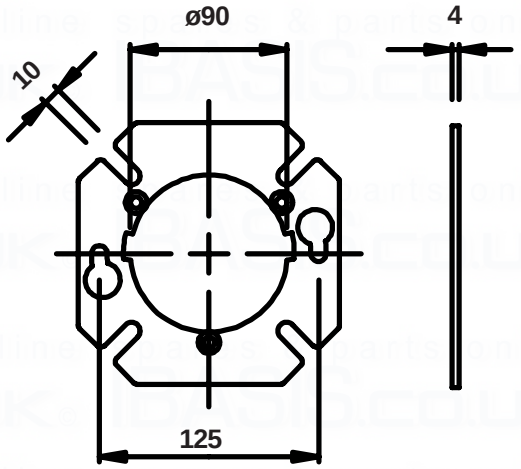

Flange B

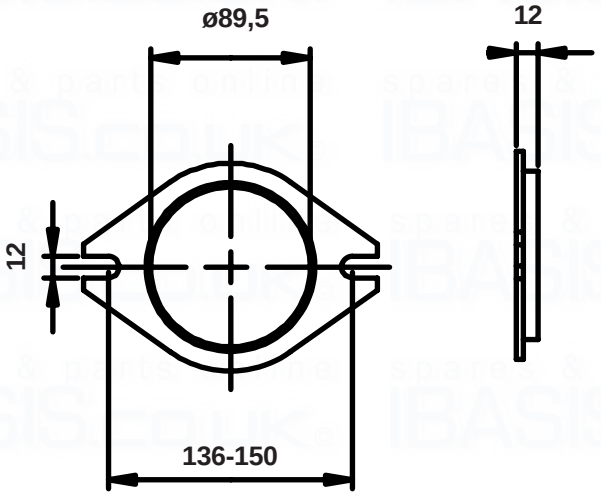

Flange D

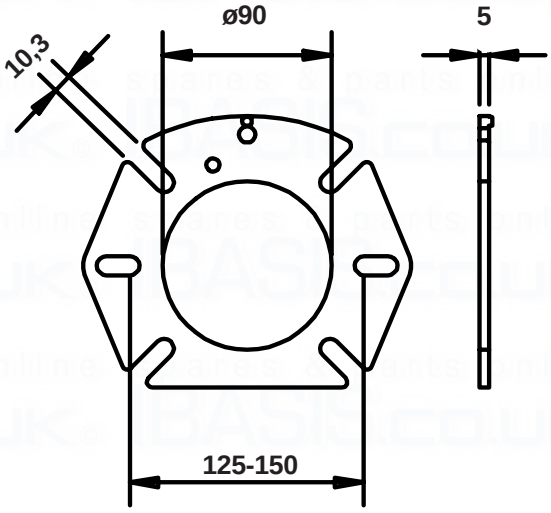

GENERAL INSTRUCTIONS

GENERAL RULES

The installation of an oil burner should be carried out in accordance with local regulations. The installer of the burner must therefore be aware of all regulations relating to oil and combustion.
Only oil suitable for the burner should be used and then in combination with a suitable oil filter before the oil pump of the burner.
If the burner is replacing an existing burner make sure that the oil filter is replaced or cleaned. The installation must only be undertaken by experienced personnel.

INSTALLATION INSTRUCTIONS

General installation instructions accompany the burner and should be left in a prominent place adjacent to the burner.

ADJUSTMENT OF BURNER

The burner is from the factory pre-set to an average value that must then be adjusted to the boiler in question.
All burner adjustments must be made in accordance with boiler manufacturers instructions.These must include the checking of flue gas temperatures, average water temperature and CO_2 or O_2 concentration.
To adjust the combustion device, start by increasing the air volume somewhat. When the burner starts it is burning with excess air and smoke number 0. Reduce the air volume until soot occurs and increase again to reach a combustion free of soot.
By this procedure an optimum adjustment is obtained. If larger nozzles are used the preadjustment of the air volume must be increased.

CONDENSATION IN CHIMNEY

A modern burner works with less excess air and often also with smaller nozzles than older models. This increases the efficiency but also the risk of condensation in the chimney. The risk increases if the area of the chimney flue is too large. The temperature of the flue gases should exceed 60°C measured 0,5 metres from the chimney top.
Measures to raise the temperature:
Insulate the chimney in cold attics
Install a chimney liner
Install a draught regulator (dilutes the flue gases during operation and dries them up during standstill)
Increase the oil quantity
Raise the flue gas temperature by removing turbulators, if any, in the boiler.

INSTRUCTIONS FOR USE

The end user should be instructed about the operation and safety features of the burner.
He should also be made aware of the importance of the area around the boiler/burner being kept free of combustible material.

PUMP ADJUSTMENT

See separate description.

ADJUSTMENT OF BURNER

To obtain a correct adjustment a flue gas analysis and a temperature measurement must be carried out. Otherwise there is a risk that a bad adjustment may cause a formation of soot, bad efficiency or condensate in the chimney.

MAINTENANCE

The boiler/burner should be examined regularly for any signs of malfunction or oil leakage.

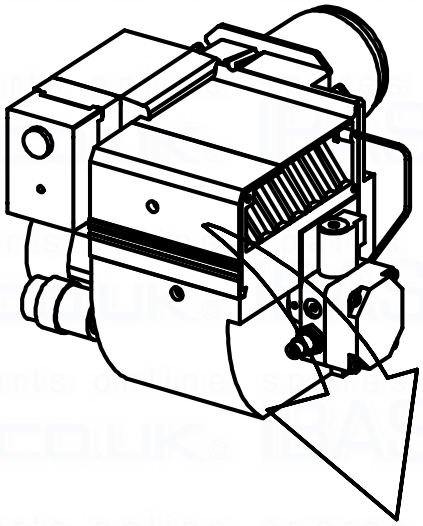

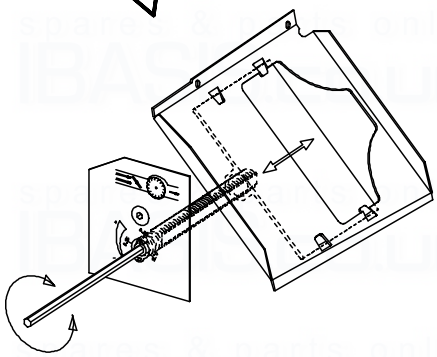

AIR ADJUSTMENT 0-32

MAINTENANCE OF OIL BURNER

Warning: Before doing any service switch off power at the main switch and cut off the oil supply.

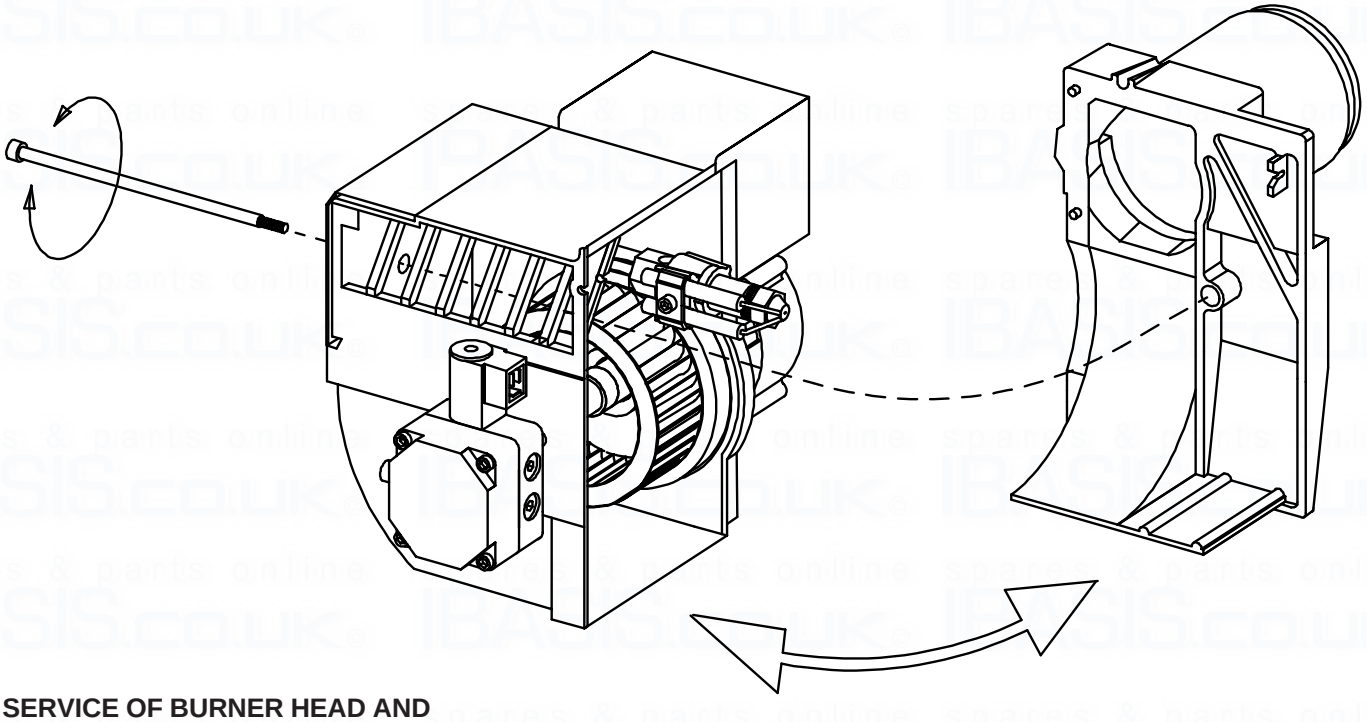

SERVICE OF BURNER HEAD AND NOZZLE ASSEMBLY

spares & parts online IBASIS.CO.UK

ELECTRIC EQUIPMENT

OIL BURNER CONTROL: SATRONIC TF 830B/TF 830B.2B/TF 832.3

FUNCTION

1. Switch on operating switch and twin thermostat
   The burner motor starts, an ignition spark is formed, the prepurge goes on till the prepurge period expires and the solenoid valve opens (2).

2. Solenoid valve opens
   Oil mist is formed and ignited. The photocell indicates a flame.

3. The safety time expires
   a. If no flame is established before this time limit the control cuts out.
   b. If for some reasons the flame disappears after this time limit, the burner will make an attempt to re-start.

4. Ignition spark goes out
   The ignition spark goes out 20 s. after flame indication and the burner is in operating position.

4-5. Operating position
   If the burner operation is interrupted by means of the main switch or the thermostat, a new start takes place when the conditions in accordance with point 1 are fulfilled.

   The oil burner control cuts out
   A red lamp in the control is lit. Press the reset button and the burner re-starts.

WIRING DIAGRAM

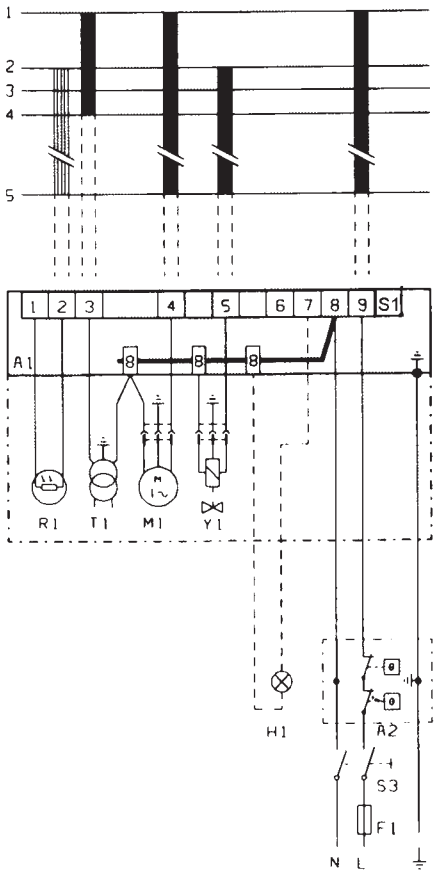

LIST OF COMPONENTS

A1 Oil Burner control	P1 Time meter (optional)
A2 Twin thermostat	R1 Photocell
F1 Fuse, max 10A	S1 Spare terminal
H1 Alarm lamp	S3 Main switch
H2 Signal lamp (optional)	T1 Ignition transformer
M1 Burner motor	Y1 Solenoid valve

Mains connection and fuses in accordance with local regulations.

TECHNICAL DATA

Pre-ignition time:	12 s
Pre-purge time:	12 s
Safety lock-out time:	10 s
Post-ignition time:	20 s
Reset time after lockout:	min. 60 s
Reaction time on flame failure:	max. 1 s
Ambient temperature:	from - 0 to +60°C
Min. current with flame established:	24 μA
Enclosure:	IP 44

(Under voltage proof only TF 830B.2B)

CONTROLL OF PHOTO CURRENT

Current through photo unit is measured with a d.c. ammeter (a moving coil instrument connected in series with the photo unit).

INSTRUCTIONS PUMP TYPE DANFOSS BFP11

TECHNICAL DATA

Viscosity range:	1,3-12,0 mm^2/s
Pressure range:	7-15 bar
Oil temperature:	-10 to +70°C

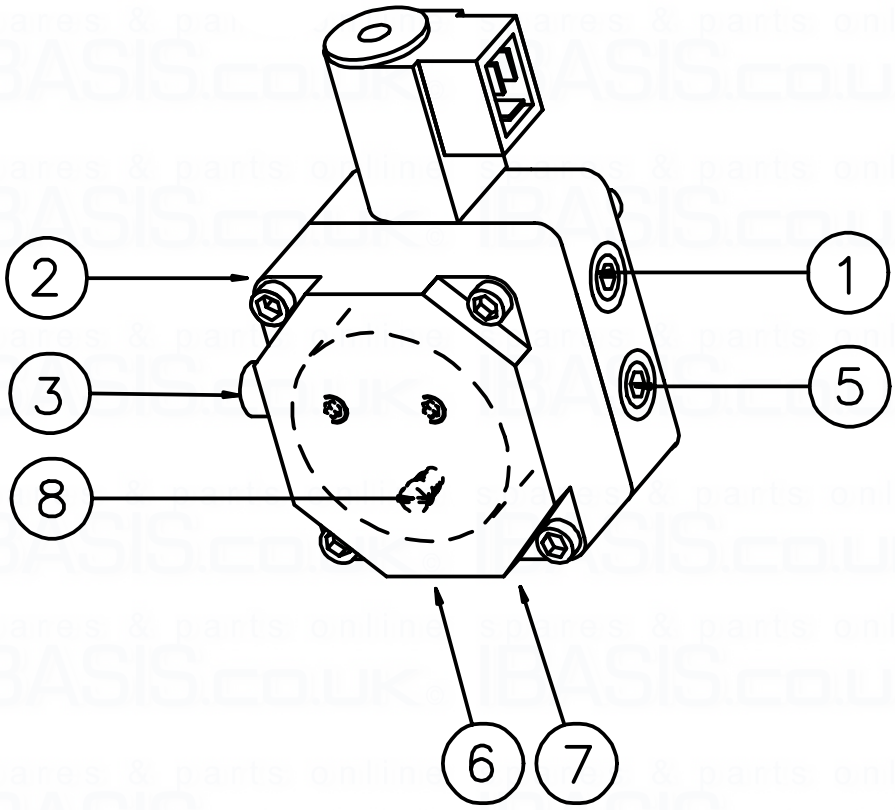

COMPONENTS

1. Nozzle port R 1/8"
2. Pressure gauge port
3. Pressure adjustment, 4mm allen key
5. Vacuum gauge port R 1/8"
6. Return line R 1/4"
7. Suction line R 1/4"
8. Return plug

SUCTION LINE TABLES

The suction line tables consist of theoretically calculated values where the pipe dimensions and oil velocity have been matched so that turbulences will not occur. Such turbulences will result in increased pressure losses and in acoustic noise in the pipe system. In addition to drawn copper piping a pipe system usually comprises 4 elbows, a non-return valve, a cut-off valve and an external oil filter.

The sum of these individual resistances is so insignificant that they can be disregarded. The tables do not include any lengths exceeding 100 m as experience shows that longer lengths are not needed.

The tables apply to a standard fuel oil of normal commercial quality according to current standards. On commissioning with an empty tube system the oil pump should not be run without oil for more than 5 min. (a condition is that the pump is being lubricated during operation).

The tables state the total suction line length in metres at a nozzle capacity of 2,5 kg/h. Max. permissible pressure at the suction and pressure side is 2,0 bar.

PURGING

On 1-pipe systems it is necessary to purge the pump. On 2-pipe systems purging is automatic through the return line.

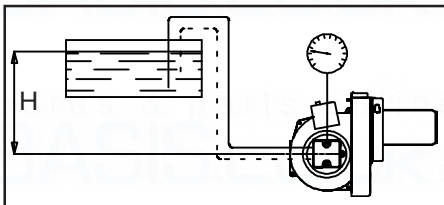

1-pipe system

Height	Pipe diameter		
H	ø4 mm	ø5 mm	ø6 mm
m	m	m	m
4,0	51	100	100
3,5	45	100	100
3,0	38	94	100
2,5	32	78	100
2,0	26	62	100
1,5	19	47	97
1,0	13	31	65
0,5	6	16	32

Two-pipe system

Height	Pipe diameter		
H	ø6 mm	ø8 mm	ø10 mm
m	m	m	m
4,0	33	100	100
3,5	31	98	100
3,0	29	91	100
2,5	27	85	100
2,0	25	79	100
1,5	23	72	100
1,0	21	66	100
0,5	19	60	92

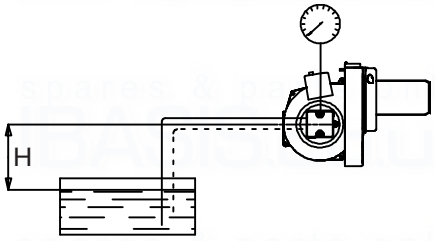

1-pipe system

Height	Pipe diameter		
H	ø4 mm	ø5 mm	ø6 mm
m	m	m	m

With an underlying tank a 1-pipe-system is not recommended

Two-pipe system

Height	Pipe diameter		
H	ø6 mm	ø8 mm	ø10 mm
m	m	m	m
0	17	53	100
-0,5	15	47	100
-1,0	13	41	99
-1,5	11	34	84
-2,0	9	28	68
-2,5	7	22	53
-3,0	5	15	37
-3,5	3	9	22
4,0	1	3	6

FUNCTION DANFOSS BFP11

When the oil pump is started, oil is drawn from the suction connection (S) through the filter (H) to the suction side of the gear wheel (C).

The gear wheel then pumps oil to the pressure side and the oil is put under pressure.
The pressure is controlled and kept constant at the set value by the regulating valve (P_1) with the diaphragm (D).
The regulating valve (P_1) distributes the oil quantity supplied by the gear set (C) between the nozzle port (E) and the return side of the pump (R).
The oil quantity utilized is determined by the set pressure on the regulating valve (P_1) and the size of the oil nozzle in the nozzle line.
The valve (P_1) functions in the following way:

- When the opening pressure has been reached, the passage to the return side opens.

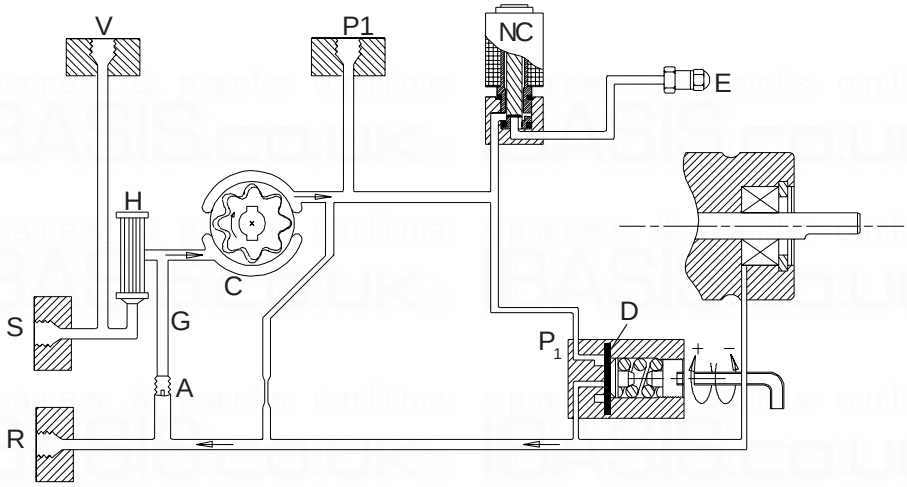

- The diaphragm and the spring keep the pump pressure constant at set value.
- If the pump is overloaded, i.e. if you try to get out more oil than the gear set can supply under existing circumstances, the oil pressure falls below the set value and the valve closes against the return side (R) by means of the diaphragm (D) and goes into starting position.

This can be remedied by:

- Reducing the pump pressure.
- Reducing the oil quantity supplied by using a smaller nozzle.
- Using a pump with a larger capacity.

REPLACEMENT OF CARTRIDGE FILTER, MOUNTING/DISMOUNTING RETURN PLUG

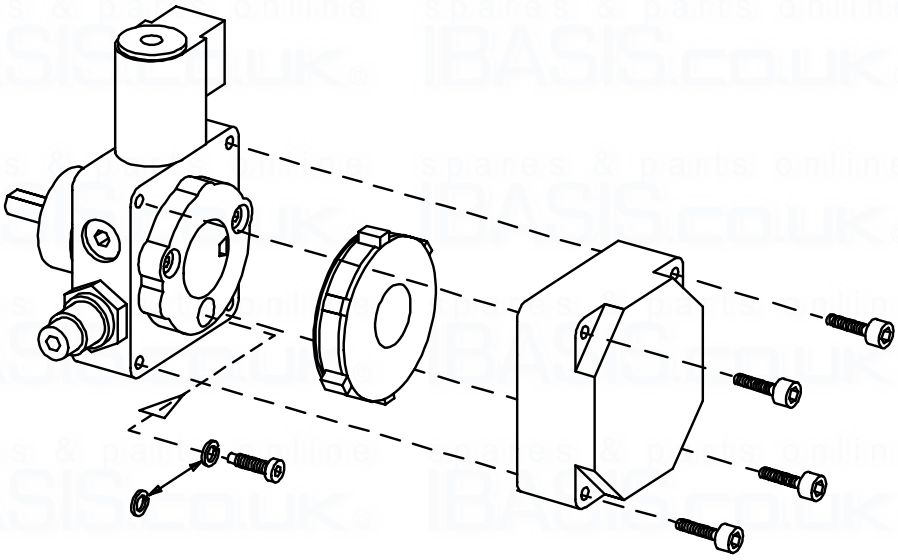

In case of one-pipe operation the horse-shoe-shaped washer will be mounted under the screw head, and in case of two-pipe operation, the horse-shoe-shaped washer will be removed.

The horse-shoe-shaped washer will be introduced in all BFP 11-pumps .

To minimize the leak between cover plate and pump housing when running one-pipe operation, the changeover screw will be mounted generally. But in order for the return oil in the pump to be able to flow freely to the suction side, a horse-shoe-shaped washer will be mounted under the screw.

NOZZLE TABLE

Pump pressure bar

Gph	8			9			10			11			12			13			14			15		
	kg/h	kW	Mcal/h	kg/h	kW	Mcal/h	kg/h	kW	Mcal/h	kg/h	kW	Mcal/h	kg/h	kW	Mcal/h	kg/h	kW	Mcal/h	kg/h	kW	Mcal/h	kg/h	kW	Mcal/h
0,40	1,33	16	13	1,41	17	14	1,49	18	15	1,56	18	16	1,63	19	17	1,70	20	17	1,76	21	18	1,82	21	18
0,50	1,66	20	17	1,76	21	18	1,86	22	19	1,95	23	20	2,04	24	21	2,12	25	22	2,20	26	22	2,28	27	23
0,60	2,00	24	20	2,12	25	22	2,23	26	23	2,34	28	24	2,45	29	25	2,55	30	26	2,64	31	27	2,73	32	28
0,65	2,16	26	22	2,29	27	23	2,42	29	25	2,54	30	26	2,65	31	27	2,75	33	28	2,86	34	29	2,96	35	30
0,75	2,49	29	25	2,65	31	27	2,79	33	28	2,93	35	30	3,08	36	31	3,18	38	32	3,30	39	34	3,42	40	35
0,85	2,83	33	29	3,00	36	31	3,16	37	32	3,32	39	34	3,47	41	35	3,61	43	37	3,74	44	38	3,87	46	39
1,00	3,33	39	34	3,53	42	36	3,72	44	38	3,90	46	40	4,08	48	42	4,24	50	43	4,40	52	45	4,56	54	46
1,10	3,66	43	37	3,88	46	39	4,09	48	42	4,29	51	44	4,48	53	46	4,67	55	48	4,84	57	49	5,01	59	51
1,20	3,99	47	41	4,24	50	43	4,47	53	46	4,68	55	48	4,89	58	50	5,09	60	52	5,29	63	54	5,47	65	56
1,25	4,16	49	42	4,40	52	45	4,65	55	47	4,88	58	50	5,10	60	52	5,30	63	54	5,51	65	56	5,70	68	58
1,35	4,49	53	46	4,76	56	48	5,02	59	51	5,27	62	54	5,50	65	56	5,73	68	58	5,95	70	61	6,15	73	63
1,50	4,98	59	51	5,29	63	54	5,58	66	57	5,85	69	60	6,11	72	62	6,36	75	65	6,60	78	67	6,83	81	70
1,65	5,49	65	56	5,82	69	59	6,14	73	63	6,44	76	66	6,73	80	69	7,00	83	71	7,27	86	74	7,52	89	77
1,75	5,82	69	59	6,18	73	63	6,51	77	66	6,83	81	70	7,14	85	73	7,42	88	76	7,71	91	79	7,97	94	81
2,00	6,65	79	68	7,06	84	72	7,45	88	76	7,81	93	80	8,18	97	83	8,49	101	86	8,81	104	90	9,12	108	93
2,25	7,49	89	76	7,94	94	81	8,38	99	85	8,78	104	89	9,18	109	94	9,55	113	97	9,91	117	101	10,26	122	105
2,50	8,32	99	85	8,82	105	90	9,31	110	95	9,76	116	99	10,19	121	104	10,61	126	108	11,01	130	112	11,39	135	116
2,75	9,15	108	93	9,71	115	99	10,24	121	104	10,73	127	109	11,21	133	114	11,67	138	119	12,11	144	123	12,53	148	128
3,00	9,98	118	102	10,59	126	108	11,16	132	114	11,71	139	119	12,23	145	125	12,73	151	130	13,21	157	135	13,67	162	139
3,50	11,65	138	119	12,35	146	126	13,03	154	133	13,66	162	139	14,27	169	145	14,85	176	151	15,42	183	157	15,95	189	163
4,00	13,31	158	136	14,12	167	144	14,89	176	152	15,62	185	159	16,31	193	166	16,97	201	173	17,62	209	180	18,23	216	186
4,50	14,97	177	153	15,88	188	162	16,75	198	171	17,57	208	179	18,35	217	187	19,10	226	195	19,82	235	202	20,51	243	209
5,00	16,64	197	170	17,65	209	180	18,62	221	190	19,52	231	199	20,39	242	208	21,22	251	216	22,03	261	225	22,79	270	232
5,50	18,30	217	187	19,42	230	198	20,48	243	209	21,47	255	219	22,43	266	229	23,34	277	238	24,23	287	247	25,07	297	256
6,00	19,97	237	204	21,18	251	216	22,34	265	228	23,42	278	239	24,47	290	249	25,46	302	260	26,43	313	269	27,49	326	280
6,50	21,63	256	220	22,94	272	234	24,20	287	247	25,37	301	259	26,51	314	270	27,58	327	281	28,63	339	292	29,63	351	302
7,00	23,29	276	237	24,71	293	252	26,06	309	266	27,33	324	279	28,55	338	291	29,70	352	303	30,84	366	314	31,91	378	325
7,50	24,96	296	254	26,47	314	270	27,92	331	285	29,28	347	298	30,59	363	312	31,83	377	324	33,04	392	337	34,19	405	349
8,00	26,62	316	271	28,24	335	288	29,79	353	304	31,23	370	318	32,63	387	333	33,95	403	346	35,25	418	359	36,47	432	372
8,50	28,28	335	288	30,00	356	306	31,65	375	323	33,18	393	338	34,66	411	353	36,07	428	368	37,45	444	382	38,74	459	395
9,00	29,95	355	305	31,77	377	324	33,59	398	342	35,14	417	358	36,71	435	374	38,19	453	389	39,65	470	404	41,02	486	418

The table applies to oil with a viscosity of 4,4 mm^2/s (cSt) with density 830 kg/m^3.

BURNER WITH PREHEATER

Consider that on preheating the oil quantity is reduced by 5-20% depending on.

- Rise in temperature at the nozzle
- Design of nozzle
- Capacity (high capacity - small difference)

FAULT LOCATION

BURNER FAILS TO START

Situation	Possible causes	Remedies
Motor runs Burner pre-purges Flame occurs Burner locks out	Flame instabillity	
	Incorrect head settings	Check nozzle to burner head dimension and electrode position
	Low oil pressure	Check oil pressure
	Excess air	Adjust air damper
	Photocell not seeing light	Check that photocell is clean and unobstructed
	Photocell failed	Confirm with new photocell
Motor runs Burner pre-purges No flame occurs Burner locks out	Control faulty	Confirm with new control. (NB. it is advisable to change the photocell if also changing control)
	False light	Check that photocell is not seeing ambient light
	No spark	Check that H.T. leads are sound and are not arcing other than at electrode gap
	No oil	Check oil supply to burner - check that pump is not airlocked Check operation of magnetic valve

BURNER FAILS TO START AFTER NORMAL OPERATION

Burner fails to start Lamp not lit	Fuse has blown	Check or replace fuse if necessary. Check reason for failure
	Appliance thermostat has not reset	Adjust thermostat
	Appliance overheat device has operated	Reset overheat device. Find reason for its operation and rectify
	Control relay or photocell defective	Check by replacement
Motor runs Burner runs to lockout	No oil being delivered	Check that tank, oil lines, fire valve, pump and nozzle are all in good order
	Excessive flue draught is preventing flame establishment	Rectify condition
	No spark	Check ignition transformer. Check electrode gap and porecelains

DELAYED IGNITION, BURNERS STARTS VIOLENTLY

Burner pulsates on start-up only with hot flue	Excessive draught	Recommission burner
Burner pulsates on start-up	Nozzle partly blocked	Replace nozzle
	Oil pressure too low	Check and recommission
	Flue blocked or damaged	Check and rectify
	Fan slipping on shaft	Check and retighten
	Pump coupling loose or worn	Check and replace
Burner starts violently	Delayed ignition	Check the electrode adjustment, see diagram Check electrodes for damage Check H.T. leads for damage and disconnection

NOTES

NOTES

ENERGY SOLUTIONS

ST 50 Oil Burner

Installation & Maintenance Manual

spares & parts online IBASIS.CO.UK

NU-WAY

Enertech Group