POTTERTON

Installation & Service Instructions

Osprey CF
125 – 220

About the Boiler

See inside cover for models covered by these instructions.
This Floor Standing Cast Iron Gas Boiler is available as Conventional Flue.
This boiler is for use with Natural Gas (G20) at 20mbar or Propane Gas (G31) at 37mbar and for use in GB & IE.

About Safety

The Gas Safety (Installation and Use) Regulations 1994 (As Amended) & The Gas Safety(Installation and Use) (Amendment) Regulations 1996.

" In your own interest, and that of safety, it is law that all gas appliances are installed by competent persons, in accordance with the above regulations. Failure to install appliances correctly could lead to prosecution."

Installation must be in accordance with the Installation & Service Instructions and the rules in force.

Leave these instructions with the user for use on future calls.

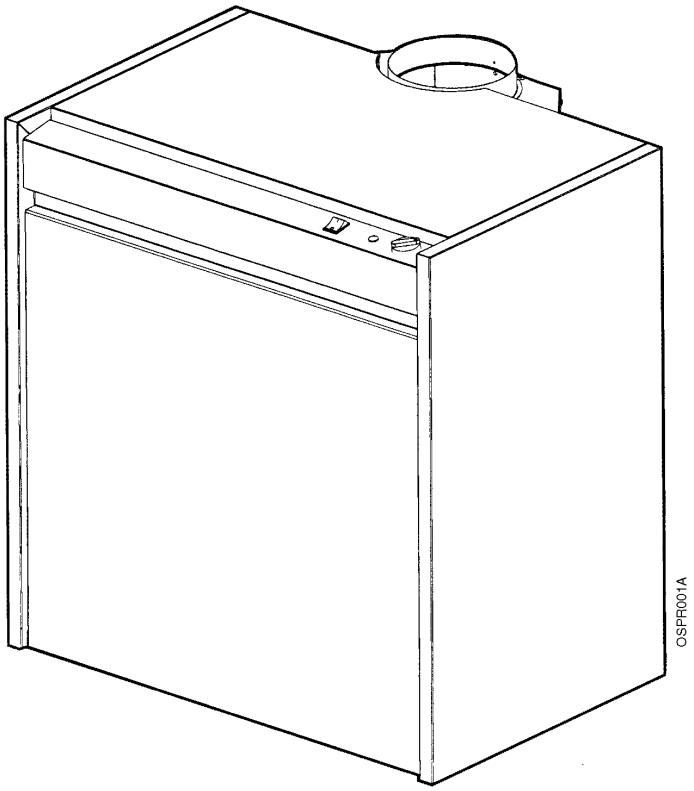

CE

spares & parts online IBASIS.CO.UK

Contents - Page 2

Technical Data 3

Introduction 5
- Health & Safety Information 5
- Codes of Practice 5

1. Installation Requirements 6
- 1.1 Gas Supply 6
- 1.2 Electricity Supply 6
- 1.3 Location of Boiler 6
- 1.4 Air Supply 7
- 1.5 Flue System 8
- 1.6 The System 9

2. Installation 13
- 2.1 Prepare the Boiler 13
- 2.2 Connect the Gas Supply 14
- 2.3 Connect the Water Supply 14
- 2.4 Connect the Power Supply Cable 15
- 2.5 Install the Room Thermostat 16
- 2.6 Install the Flue 16

3. Commissioning 17
- 3.1 Commission the Boiler 18
- 3.2 Final Adjustments 19
- 3.3 Instruct the User 19
- 3.4 Advise the User 19

4. Service & Replacement of Parts 20
- 4.1 General Access 21
- 4.2 Control Panel 21
- 4.3 TTB Thermostat 22
- 4.4 Boiler Thermostat 22
- 4.5 Overheat Thermostat 22
- 4.6 Burner Assembly 22
- 4.7 Gas Valve 23
- 4.8 Pilot Interrupter 23
- 4.9 Pilot Assembly 23
- 4.10 Burner 23
- 4.11 Cleaning Heat Exchanger 23

5. Wiring Diagrams 24

6. Fault Finding 26

7. Short List of Spares 29

The models covered by these instructions are:-
Osprey 125 - G.C. No. 41 589 33
Osprey 150 - G.C. No. 41 589 44
Osprey 180 - G.C. No. 41 589 45
Osprey 220 - G.C. No. 41 589 62

The boiler model and serial number are given on the boiler data label which is located on the front outer casing fixing bracket.

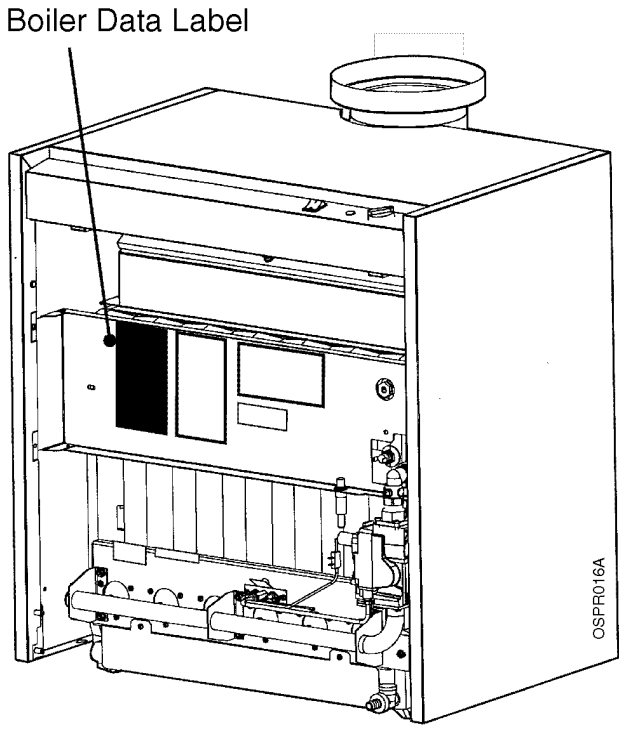

Fig. 1

SAFETY, PERFORMANCE & QUALITY

Osprey boilers have been assessed by a Government appointed Notified Body and shown to meet the 'Essential Requirements' of the European Gas Appliance Directive. The Directive lays down requirements for the safety and efficiency of the appliance, together with its design, construction, and use of materials.
It also requires the production process to be covered by an approved and monitored system of quality assurance.

Technical Data - Page 3

Heat Input & Efficiency figures are quoted as gross		Boiler models			
Maximum Rate		125	150	180	220
Output	kW	35.0	43.0	52.8	64.5
	Btu/h	119,420	146,716	180,154	220,074
Input	kW	43.09	53.12	64.79	79.77
	Btu/h	147,020	181,245	221,063	272,171
Gas rate (G20)	m3/h	4.10	5.06	6.17	7.60
	ft3/h	145	179	218	268
Injector Size	mm	2.6	2.6	2.6	2.6
Burner Pressure	mbar	12.8	12.2	13.3	13.8
Permanent Pilot Injector	mm	2 Holes Ø 0.29			
Combustion Product Rate	g/s	30.56	33.89	39.44	47.50
Primary Flue Temp. °C		170	165	150	155
LPG Gas Rate(G31)	kg/h	3.01	3.7	4.6	5.6
Injector Size	mm	1.75	1.75	1.75	1.75
Burner Pressure	mbar	36.5	36.5	36.5	36.5
Permanent Pilot Injector	mm	1 Hole Ø 0.24			
Efficiency (Gross)	%	81.2	80.9	81.5	80.9
Injector Size	mm	1.75	1.75	1.75	1.75
Water Content	Litres	24	29	33	38
Appliance Weight	kg	135	165	195	225
Nominal flow for temp. diff. of 11K	l/min	45.6	56.0	68.8	84.0
Pressure Loss for temp. diff. of 11K	mbar	9.7	18.7	27.5	55.9
Maximum Working Head		30m (3 bar)			
Minimum Working Head		0.5m			
Gas Supply Pressure		G20 - 20mbar G31 - 37mbar			
Gas Supply Connection		22mm Copper pipe with female compression fitting			
Maximum Flow Temperature		85°C			
Flow Connection		11/4/" Steel pipe, taper thread			
Return Connection		11/4" Steel pipe, taper thread			
Electricity Supply		230v ~ 50Hz Fused at 3A			
Power Consumption		10 Watts (excluding pump)			
Classifications		CAT 11 $_2$H 3P - B11Bs - IP20			

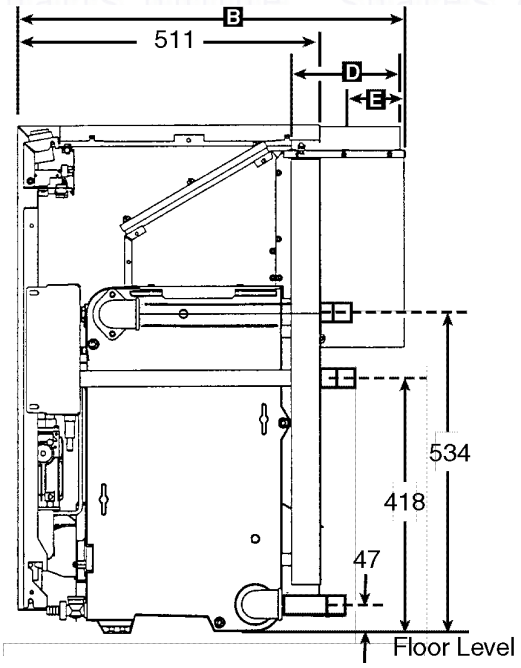

Side View

All Dimensions in mm

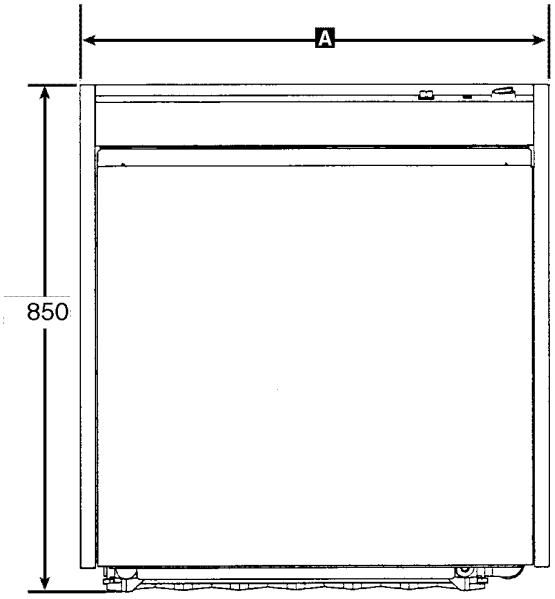

Front View

Model	No. of Elements	Dimensions in mm					
		A	B	C	D	E	F
125	5	600	600	332.5	130	76	(6")
150	6	695	600	380	150	86	(6")
180	7	790	650	427.5	180	99	(8")
220	8	885	650	475	200	109	(8")

F = Seperate Flue Spigot

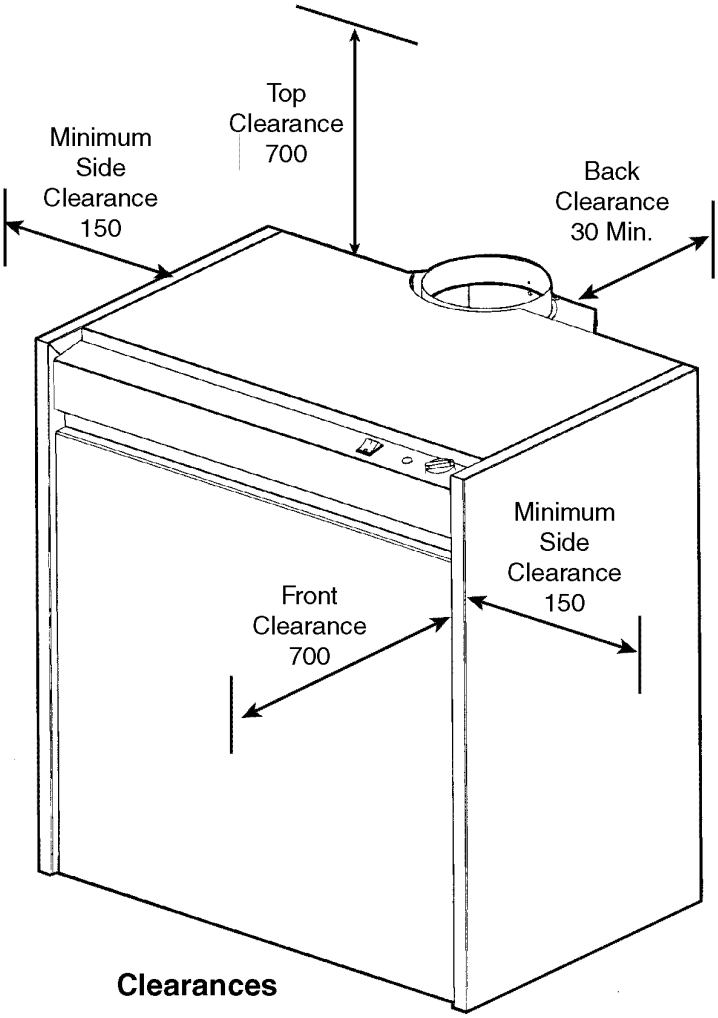

Clearances

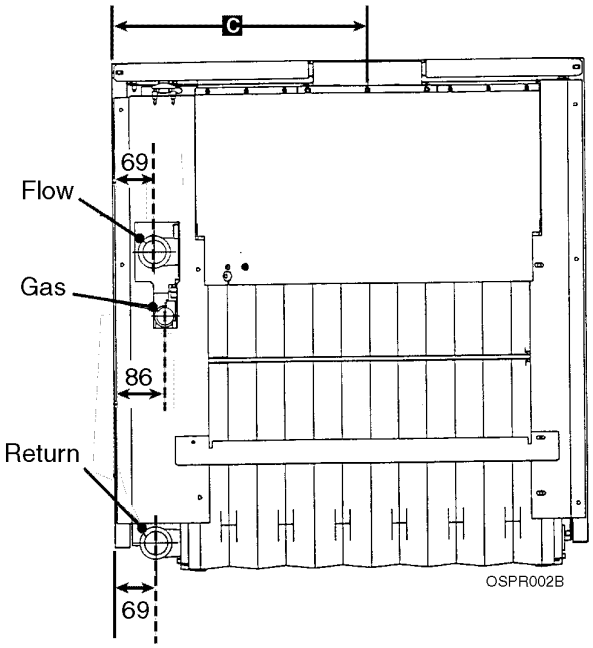

Rear View

Fig. 2

spares & parts online IBASIS.CO.UK

The Gas Safety (Installation and Use) Regulations 1994 (As Amended) & The Gas Safety (Installation and Use) (Amendment) Regulations 1996.

This appliance must be installed and serviced by a competent person, in accordance with the above regulations.

In the UK 'Corgi' Registered Installers (including the regions of British Gas Plc) undertake to work to a safe and satisfactory standard.

Failure to install appliances correctly could lead to prosecution.

It is in your own interest, and that of safety, to ensure that the regulations are complied with.

Osprey boilers are fully automatically controlled, floor standing, conventional flued appliances using a cast iron heat exchanger and are available in outputs ranging from 35.0 - 64.5 kW.

The boilers are designed for use on fully pumped open vented or sealed water systems with an indirect hot water cylinder.

THEY MUST NOT BE CONNECTED TO A DIRECT CYLINDER.

The boilers are for use on Natural Gas (G20) and LPG (G31).

Samples of the Potterton Osprey gas boilers have been examined by Ctif, a France Notified Body. The range is certified to comply with the essential requirements of the Gas Appliance Directive 90/396/EEC, the Low Voltage Directive 72/23/EEC and shows compliance with the Electro Magnetic Compatibility Directive 89/336/EEC and are therefore permitted to carry the CE Mark.

Delivery & Kits Available

The unit is delivered in one package, the boiler with fittings and the flue spigot.

Health and Safety Information for the Installer and Service Engineer

Under the Consumer Protection Act 1987 and Section 6 of the Health and Safety at Work Act 1974, we are required to provide information on substances hazardous to health.

Small quantities of adhesives and sealants used in the product are cured and present no known hazards.

The following substances are also present.

Insulation and Seals

Material - Ceramic Fibre. Alumino - Silicone Fibre.

Description - Boards, Ropes, Gaskets.

Known Hazards - Some people can suffer reddening and itching of the skin. Fibre entry into the eye will cause foreign body irritation. Irritation to respiratory tract.

Precautions - People with a history of skin complaints may be particularly susceptible to irritation. High dust levels are only likely to arise following harsh abrasion. In general, normal handling and use will not cause discomfort, follow good hygiene practices. Wash hands before consuming food, drinking or using the toilet.

First Aid - Medical attention must be sought following eye contact or prolonged reddening of the skin.

Codes of Practice

The boiler must be installed in accordance with: The Gas Safety (Installation and Use) Regulations 1994 (As Amended) & The Gas Safety (Installation and Use) (Amendment) Regulations 1996. and the current issue of:-

The Building Regulations, Building Standards (Scotland) Regulations, Local Building Regulations, Model and local Water Undertaking Bye-laws, IEE Wiring Regulations and Health & Safety Document No. 635 "The Electricity at Work Regulations 1989".

IMPORTANT

This appliance has been certified for safety. It is therefore important that no external control device (e.g. flue dampers, economisers, etc.) be directly connected to the appliance unless covered by these Installation & Service Instructions or otherwise recommended in writing.

Any direct connection of a control device not approved by Potterton Myson Ltd, could invalidate the CE Certification and normal appliance warranty.

1.1 Gas Supply

The meter and supply pipes must be capable of delivering the required quantity of gas in addition to the demand from any other appliances in the house and must be governed at the meter.

If this is not achieved the local gas supplier must be contacted.

A minimum 22mm gas supply pipe should be used up to the inlet connection of the gas cock on the boiler. The pipe diameter required will depend upon the length - see Section 2. and BS 5449: 1990 - Appendix B.

The complete installation must be tested for gas soundness and purged as described in BS6891.

1.2 Electricity Supply

230V ~ 50Hz via a fused double pole switch with a contact separation of at least 3 mm in both poles adjacent to the boiler. Power consumption is approximately 10W. There must be only one common isolator for the boiler and its control system and it must provide complete electrical isolation. A plug complying with the requirements of BS 1363 (if fitted) must be accessible to the user after installation of the appliance.

Fuse the supply at 3 A. The minimum requirement for the power supply cable is that it should be a PVC sheathed cord at least 0.75 mm2 (24 x 0.2 mm) (code designation HO5 VV-F or HO5 VVH2-F) as specified in table 16 of BS6500:1984.

All wiring external to the boiler shall comply with the latest IEE Wiring Regulations, and any local regulations which apply.

WARNING: THIS APPLIANCE MUST BE EARTHED.

In the event of an electrical fault after installation of the boiler, preliminary electrical systems checks must be carried out i.e. Earth Continuity, Short Circuit, Polarity and Resistance to Earth.

1.3 Location of Boiler

The boiler is not suitable for external installation. The boiler must stand firm and level on a non combustible surface. No special floor protection is needed, but finishes which soften when warm e.g. linoleum and plastic floor tiles should be removed or may be protected by an insulating sheet at least 10mm thick.

The boiler must be installed so that the draft diverter is in free air according to the clearance dimensions shown in Fig. 2.

The flue duct should not be closer than 25 mm to combustible material. A metal sleeve should be installed to surround the flue duct to provide a 25mm annular space. Further guidance is given in BS5440:1:1990, sub-clauses 3.3 and 4.2.5.

If the boiler is to be installed in a timber framed building it should be fitted in accordance with the British Gas publication- Part 19 - Building and Kitchen Work. If in doubt advice must be sought from Potterton Myson.

Conventional flue boilers can be installed either in a kitchen or utility room or (125 and 150 models only) inside a suitably ventilated, purpose designed or modified compartment.

Where the installation of the boiler will be in an unusual position, special procedures may be necessary and BS6798 and BS5546 give detailed guidance on this aspect.

A compartment used to enclose the boiler is only allowed if the clearances shown in Fig. 2 and the air requirements of BS 5440 Part 2 are followed to allow correct functioning of the draft diverter (**125 and 150 models only**).

If the boiler is to be fitted in a run of kitchen units it is recommended that the boiler is fitted first or the adjacent units removed.

The boiler requires the clearances shown in Fig. 2.

Conventional Flue Models

1.4 Air Supply

The air requirements must meet BS 5440 Part 2 & BS 6644.

The room in which the boiler is installed must be ventilated. Ventilation of the room containing the boiler shall include air for combustion and correct operation of the flue (ie Draft Diverter dilution).

A permanent air vent shall be provided in an outside wall of the building either at high or low level in accordance with Table 1 - Osprey 125 & 150 Only. The Osprey 180 & 220 must have high and low level vents in accordance with Table 1a.

The opening may be:

a) Directly into the room or space containing the boiler (all models) or indirectly via an opening of at least the same area (125 & 150 models only).

b) Via a duct either directly into the room or space (all models) or indirectly via an opening of at least the same free area (125 &150 models only).

Where air is drawn indirectly from outside through more than two air vents refer to BS 5440 Part 2 - Osprey 125 & models150 only.

Where an extraction fan is fitted in the room containing the boiler, special ventilation requirements must be implemented. Refer to BS 5440 Part 2 and BS 6644.

Any grille and/or duct should be so sited and of a type not to become easily blocked or flooded and should offer low resistance to airflow.

If the boiler is installed in a compartment, permanent air vents are required in the compartment, one at high level and one at low level (Table 2), either direct to the outside air or to a room Osprey 125 & 150 Only. The Osprey 180 & 220 cannot be installed in a compartment except those specified in BS 6644 using a monodraught system. Both high level and low level air vents must communicate with the same room or must be on the same wall to outside air (125 & 150 models only).

Ensure that all air inlets and outlets are always completely free from obstruction.

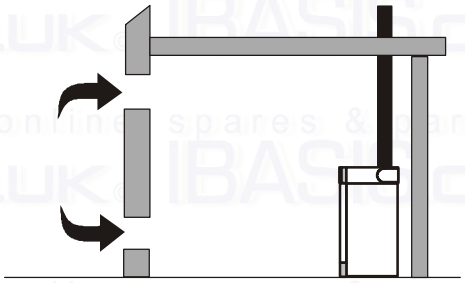

Open Flue
Boiler In Room

Table 1

Combustion Air

Model	Output kW	Free Area cm²
Osprey 125	35	163
Osprey 150	43	208

Table 1a

Combustion Air - High and Low Level

Model	High Level cm²	Low Level cm²
Osprey 180	281	562
Osprey 220	315	630

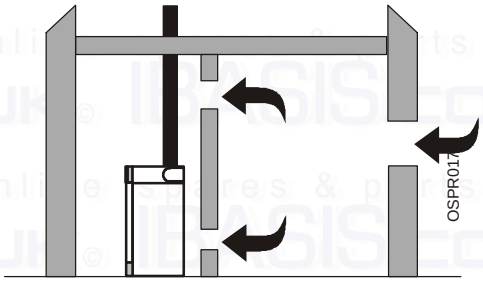

Open Flue Boiler Compartment
Ventilated From Inside

Table 2

Compartment Ventilation - Free Area

Model	High Level cm²	Low Level cm²
Osprey 125	388	776
Osprey 150	478	958

Fig. 3

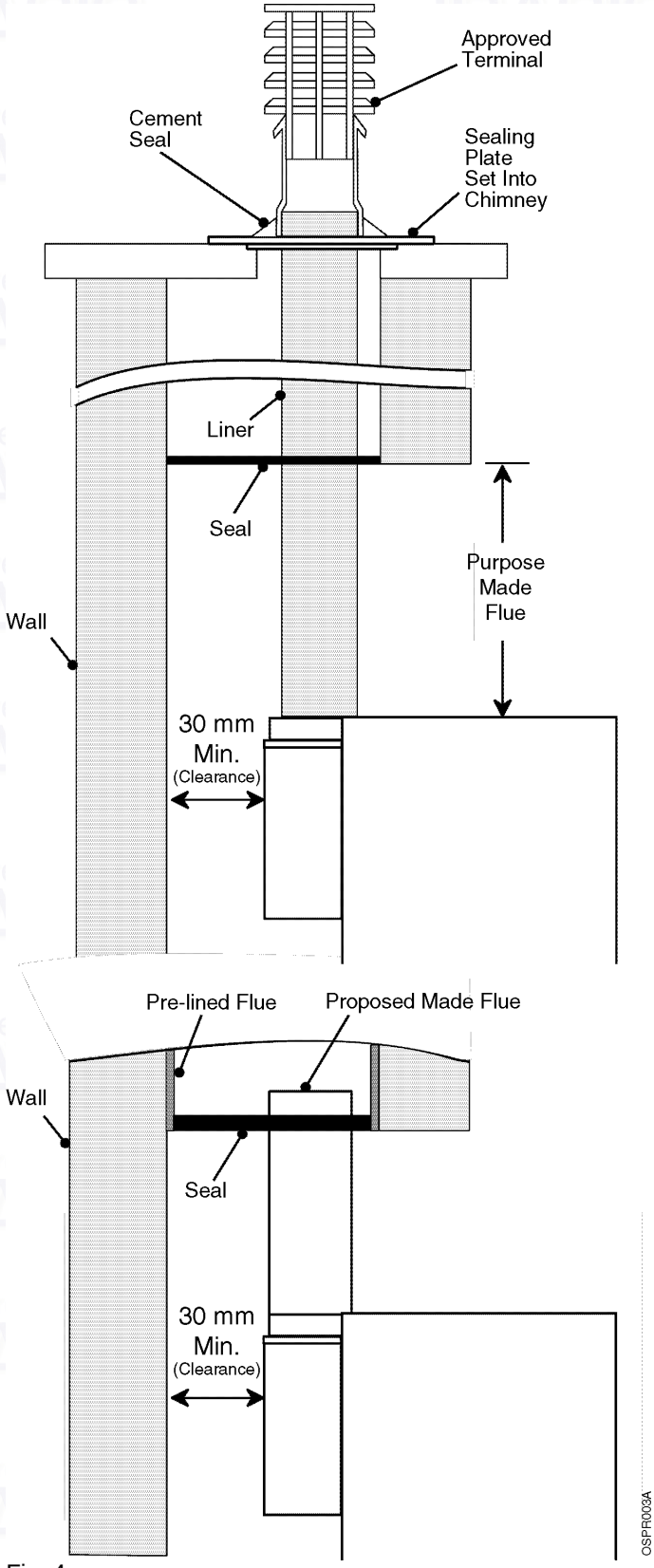

Fig. 4

1.5 Flue Systems

A flue system (lined throughout its length) must be provided to evacuate the flue products of combustion from the boiler. Reference should be made to the building regulations and BS 5440:1. and the flue system efficiency should be checked in accordance with BS 5440 and BS 6644.

Ideally a flue should rise vertically and any terminal or termination point shall be positioned so that combustion products can disperse safely at all times. Therefore for practical purposes, the flue should have the shortest possible run to external atmosphere within the limit of the minimum length of 1 metre, with as near vertical rise as possible, 90° bends should be avoided. The terminal must be at least above roof level and of a type approved by British Gas.

There should be at least 1000mm of vertical flue from the boiler flue socket.

Horizontal runs should be avoided, however if a near horizontal flue run is unavoidable, the total vertical height necessary should be calculated in accordance with BS 5440:1 and BS 6644.

If an existing chimney is used, ensure that it is thoroughly swept before lining or connecting the boiler.
Care should be taken to avoid condensation in the flue.

In the case of a pre-lined chimney, it must be connected to the socket of the boiler flue hood with a length of purpose made flue.

Where a chimney lined with a vitreous enamelled flue liner is used, connect and seal a short length of purpose made flue into the base of the pre-lined flue, to connect to the boiler.

The flue diameter should never be less than the diameter of the flue spigot on the draft diverter.

Note: A separate 6 - 8" flue adaptor is supplied with the boiler.

1.6 The System

When installing the boiler on an existing system, the system should be chemically cleaned prior to installation.

The boiler must be used on INDIRECT hot water systems only. It is suitable for use only on fully pumped systems which may be sealed or open vented.

The system should be designed so that the maximum static head does not exceed 30m and a minimum of 500mm. See Fig. 6.

The pump should preferably be fitted in the flow, though installation in the return is acceptable providing care is taken to ensure air is not drawn into the system due to the negative pressure effects of the pump. Isolating valves must be fitted as close as possible to allow replacement without system draining.

Drain off taps should be fitted in the pipework close to the boiler and in the low points of the system.

Fully Pumped Systems

The pump must be wired directly to the terminal block (See Fig. 12) as it will allow the pump to be controlled by the over-run device. This will ensure that the pump will continue to run after boiler shuts down thus preventing nuisance operation of the overheat thermostat.

Systems fitted with controls which allow the boiler to operate when both the hot water and central heating circuits are closed i.e. mechanically operated thermostatic control valves, must be fitted with a by-pass circuit capable of:-

1. Dissipating a minimum of 2kW.
2. Maintaining a minimum water flow through the boiler of 8 L/min.

A suggested method of meeting these requirements by using a bathroom radiator fitted with two lockshield valves is shown in Figs. 6 & 7.

Diagrammatic layouts of a fully pumped open system and a fully pumped sealed system are shown in Figs. 6 & 7. The central heating should be designed as such that the minimum flow through the boiler is above 8 L/min.

Sealed Systems (Fully Pumped)

Installation

The installation must comply with the requirements of BS 6798: 1987 and BS 5449: 1990. The British Gas publication "British Gas Specification for Domestic Wet Central Heating Systems" should also be consulted.

Safety Valve

A non-adjustable spring-loaded safety valve, preset to operate at 3 bar (45lbf/in2) shall be used. It must comply with BS 6759: Pt 1. and include a manual testing device. It shall be positioned in the flow pipe either horizontally or vertically upwards and close to the boiler. No shut-off valves are to be placed between the boiler and the safety valve. The valve should be installed into a discharge pipe which permits the safe discharge of steam and hot water such that no hazard to persons or damage to electrical components is caused.

Pressure Gauge

A pressure gauge incorporating a fill pressure indicator, covering the range 0 - 4 bar (60 lbf/in2) shall be fitted to the system. It should be connected to the system, preferably at the same point as the expansion vessel. Its location should be visible from the filling point.

Expansion Vessel

A diaphragm type expansion vessel to BS 4814: Pt 1. shall be fitted close to the inlet side of the pump on the flow from the boiler before any valves. The connecting pipework should not be less than 15mm. Pipework connecting the expansion vessel should not incorporate valves of any sort. Methods of supporting the vessel are supplied by the vessel manufacturer. The nitrogen or air charge pressure of the expansion vessel shall not be less than the hydrostatic head, (height of the top point of the system above the expansion vessel).

To size the expansion vessel it is first necessary to calculate the volume of water in the system in litres. The following volumes may be used as a conservative guide to calculating the system volume.

Boiler Heat Exchanger:	See Technical Data
Small Bore Pipework:	1 litre per kW of system output
Micro Bore Pipework:	7 litres
Steel Panel Radiators:	8 litres per kW of system output
Low Water Capacity Radiators:	2 litres per kW of system output
Hot Water Cylinder (Secondary Store):	2 litres

If the system is extended, the expansion vessel volume may have to be increased unless provision has been made for extension. Where a vessel of the calculated size is not available, the next available larger size should be used. The boiler flow temperature is controlled at approximately 85°C.

The vessel size can now be determined from the information in Table 4 where V = System volume in litres.

Vessel Charge Pressure (bar)	**0.5**	**10.**
Initial System Pressure (bar)	**1.0**	**1.0**
Expansion Vessel Volume (litres)	**V x0.11**	**V x 0.087**

Table 4.

Circulation Pump Selection

The resistance through the heat exchanger when operating with a water flow rate producing an 11°K temperature rise at maximum boiler output are shown in Table 5. If other controls such as 2 position valves are used in the system, the resistance through them, quoted in their manufacturers literature must be taken into account. The pump may be fitted on either flow or return and MUST be wired directly to the boiler terminal block. It must be fitted with two isolating valves which are positioned as close to the pump as possible. Closing of any valve must always leave the open vent and pressure relief valve unobstructed.

Table 5. Hydraulic Resistance for 11k Temp. difference

Boiler Output kW	Water Flow Rate L/min	Hydraulic Resistance mbar	m
35.0	45.6	9.7	0.1
43.0	56.0	18.7	0.19
52.8	68.8	27.5	0.27
64.5	84.0	55.9	0.56

Cylinder

The hot water cylinder must be an indirect coil type or a direct cylinder fitted with an immersion calorifier suitable for operating at a gauge pressure of 0.3 bar (5 lbf/in2) in excess of safety valve setting. Single feed indirect cylinders are not suitable for sealed systems.

Method of Make-up

Provision shall be made for replacing water loss from the system either:-

i) from a make-up vessel or tank mounted in a position higher than the top point of the system, and connected through a non-return valve to the system on the return side of the hot water cylinder or the return side of all heat emitters.
or
ii) where access to a make-up vessel would be difficult by using the mains top up method or a remote automatic pressurisation and make-up unit as shown in Fig. 8.

Mains Connection

There shall be no connection to the mains water supply or to the water storage tank which supplies domestic hot water even through a non-return valve, without the approval of the Local Water Authority.

Filling Point

The system shall be fitted with a filling point always on the return at low level which incorporates a stop valve to BS 1010 and a double check valve (approved by the National Water Council) to be fitted in this order from the system mains, see Fig. 8.

Hydraulic Resistance through Osprey CF Range

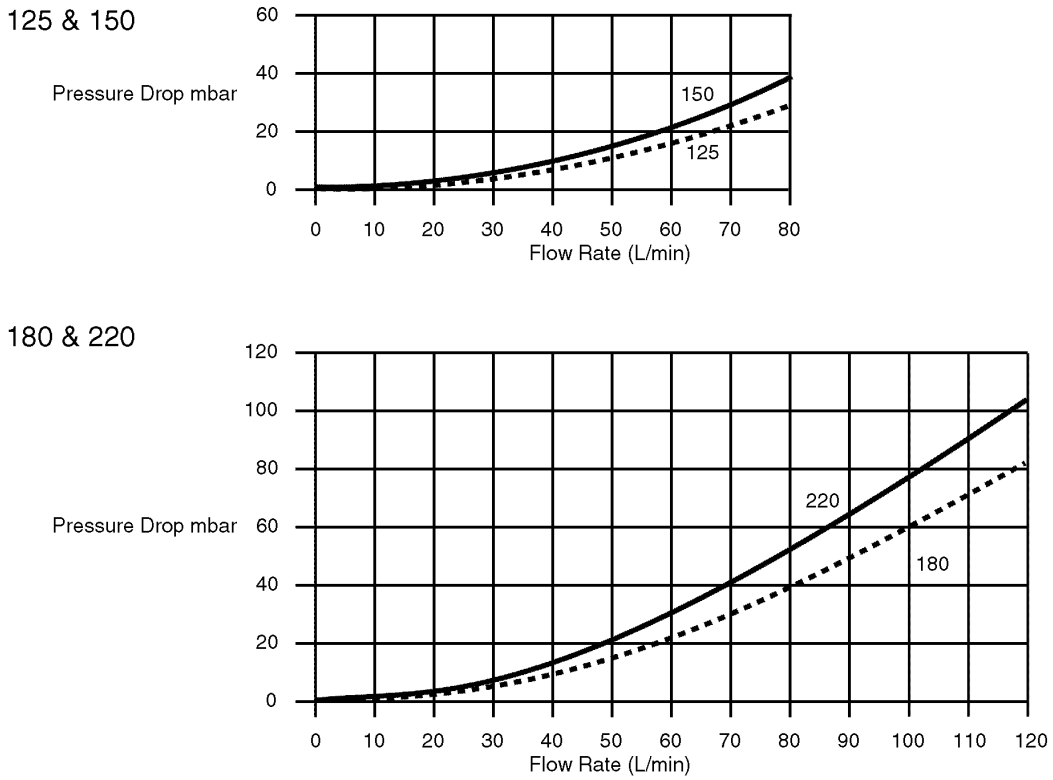

Fig. 5

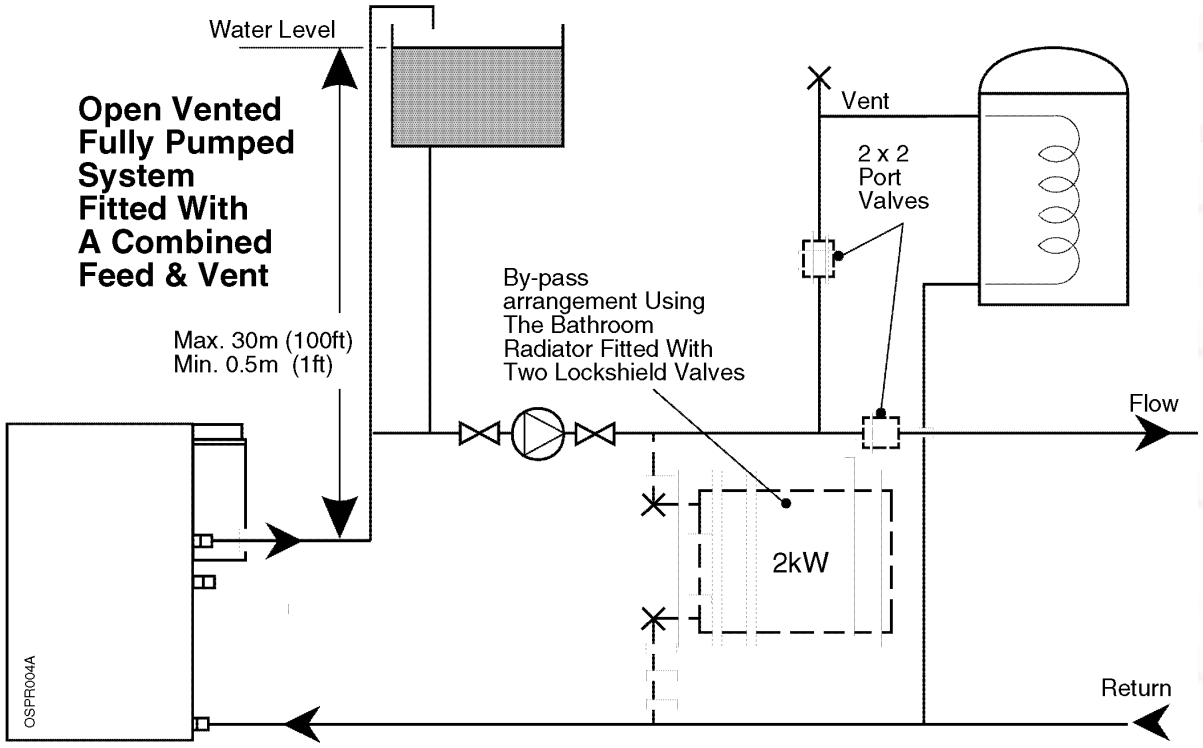

Fig. 6

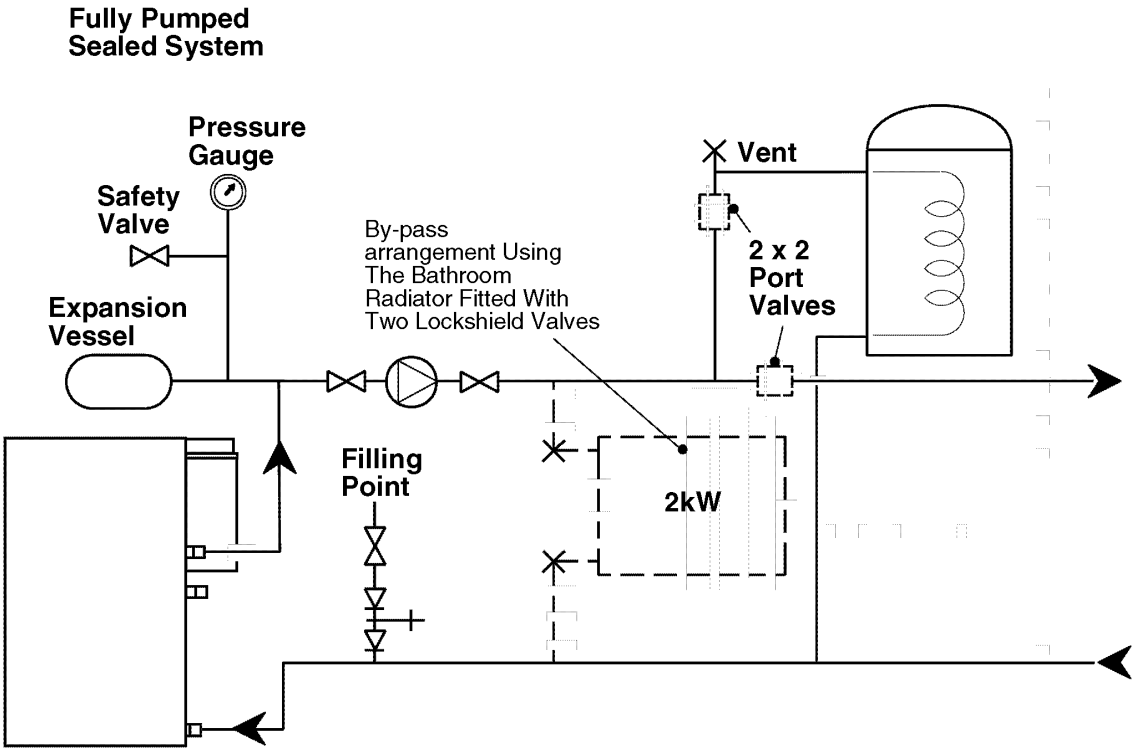

Fig. 7

Filling A Sealed Water System (Method 1)

Mains Topping-Up Method
Note: This Method Of Filling A Sealed System May Only Be Used If Acceptable To local Water Undertaking

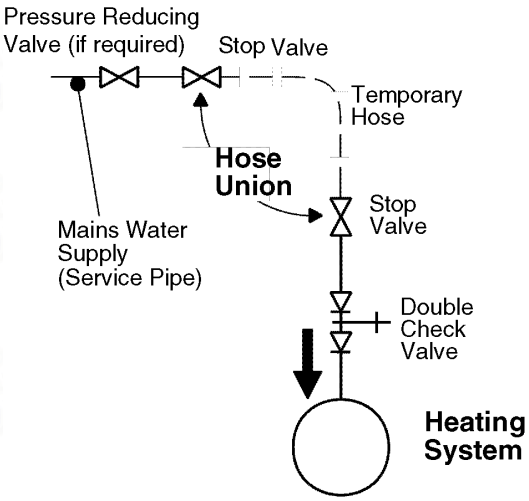

Filling A Sealed Water System (Method 2)

Cistern Filling Method
Note: Cistern To Be Supplied Through A Tempory Connection From A Service Pipe Or Cold Water Distributing Pipe

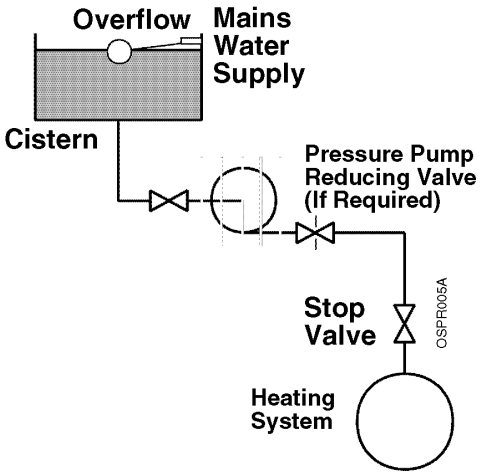

Fig. 8

2.1 Prepare the boiler

These instructions assume you have decided on where the boiler will be located.

1. Carefully unpack the boiler.
2. Do not discard any packaging until all the items are accounted for.
3. Position the boiler to ensure the draft diverter is the required distance from the wall.
4. Remove the top panel - 2 screws.
5. Remove the front door - unhook and lift off.
6. Fit the flue spigot (supplied separately inside the case) to the draft diverter.

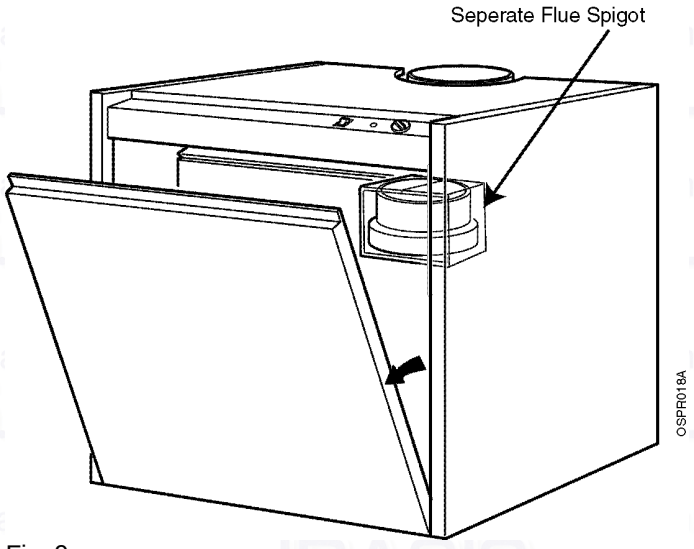

Fig. 9

spares & parts online IBASIS.CO.UK

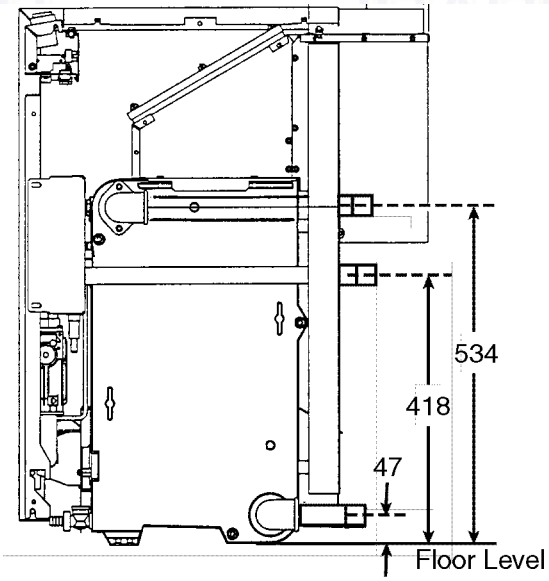

Side View

All Dimensions
in mm

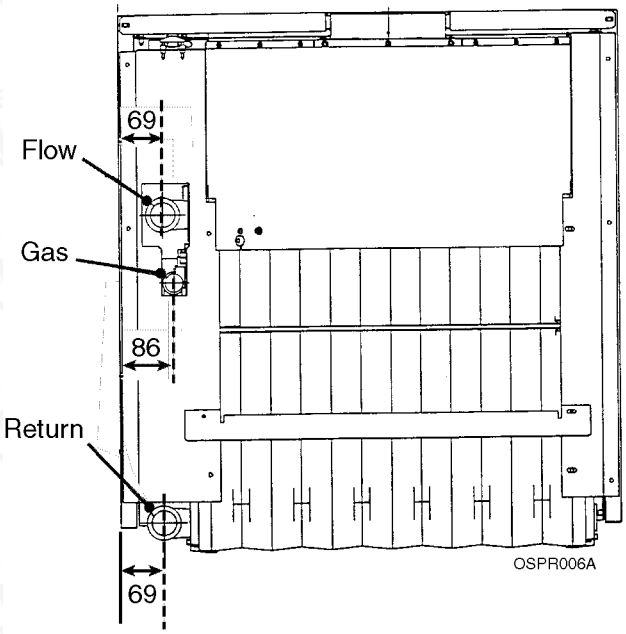

Rear View

Fig. 10

2.2 Connect the Gas Supply

1. Ensure that the gas supply is isolated.

2. Connect the gas supply to the gas cock using a 22mm copper pipe, sliding it in from the back panel to the gas cock.

   The pipe diameter required will depend on the boiler model and the pipe length from the gas meter. Ensure that the gas supply pipe is selected in accordance with BS 6891 so that an adequate gas supply to the boiler is provided.

Do not turn the gas supply on at this stage.

2.3 Connect the Water System

1. Connect system pipework to the boiler. Arrange pipework to ensure correct venting of pipes and boiler.

   The pipe diameter required will depend on boiler model and system design and may not be the same as boiler flow and return tappings.

   Note: Drain off taps should be installed at the lowest points in the system.

The flow and return pipes on the boiler are made of steel with a conical 11/4/" male thread.

2.4 Connect the Power Supply Cable

1. The mains supply should be 230V 50Hz and fused at 3A.

2. The mains wiring to the boiler has to be connected inside the control panel

   Access to the Control Panel Wiring Block

   a. Open the top panel of the boiler by unscrewing the rear screws.

   b. Turn the blocking bracket 'A' to the inside of the boiler.

   c. Open the control panel and turn as shown in Fig. 11.

   d. Remove the 2 screws 'B'.

   e. Lift metallic strip to enable access to the wiring block 'C'.

3. Cable clamping is provided on the side panel and control panel. Feed the cables through the cable holder and clamps, and into the terminal connection.

   Note: When connecting the power supply cable, ensure that the length of the earth wire is such, that if the power supply cable pulls out of the cable clamp the live and neutral wires become taut before the earth wire.

4. The pump wiring should be routed as the mains wiring, through the cable clamps and connected to the terminal connections PL and PN - Fig. 12.

5. Take up excess slack in the cables between the terminal block and the cable clamp, then tighten the cable clamp screws.
   Ensure sufficient slack is available to the cable clamps to allow the control panel to hinge freely. Check by opening the control panel.

6. Close the back panel of the control board and secure using the two screws - see Fig. 12.

7. Close the control panel by turning it upwards and pushing it onto hinge D.

8. Carry out preliminary electrical system checks i.e. Earth Continuity, Short Circuit, Polarity and Resistance to Earth.

   Frost Thermostat:
   If a Frost Thermostat is to be fitted, the connections should be made in the wiring external to the boiler.

   Do not switch on the electricity supply at this stage.

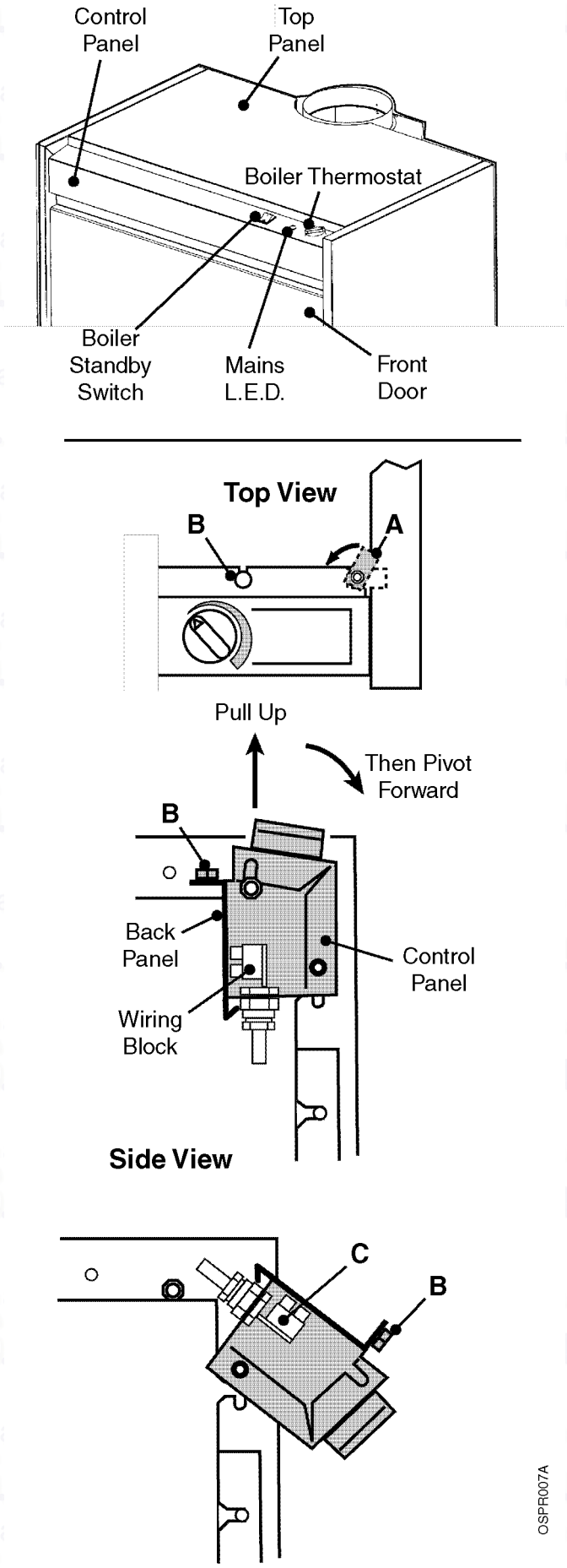

Fig. 11

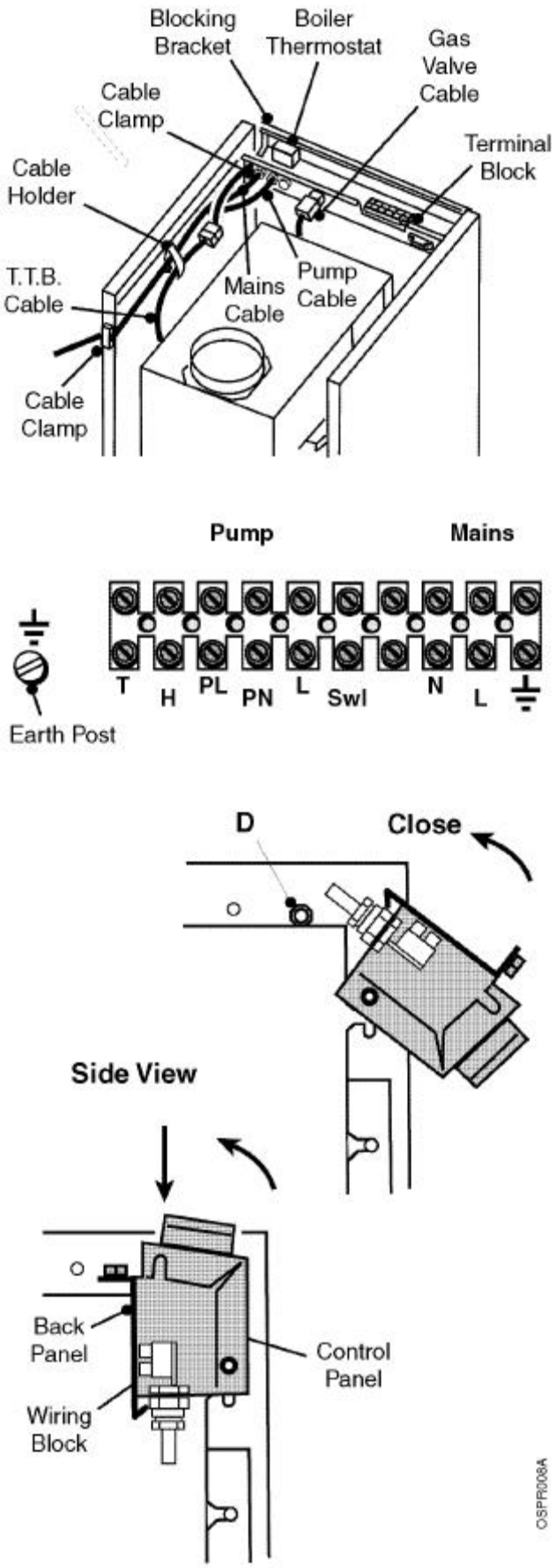

Fig. 12

2.5 Install the Room Thermostat

1. If a Room Thermostat is to be fitted, the connections should be made in the wiring external to the boiler.

2.6 Install the flue

1. Install the natural draft flue according to BS 5440 and Fig. 4.

2. The boiler is fitted with a spillage device that will trip the boiler out under adverse conditions.

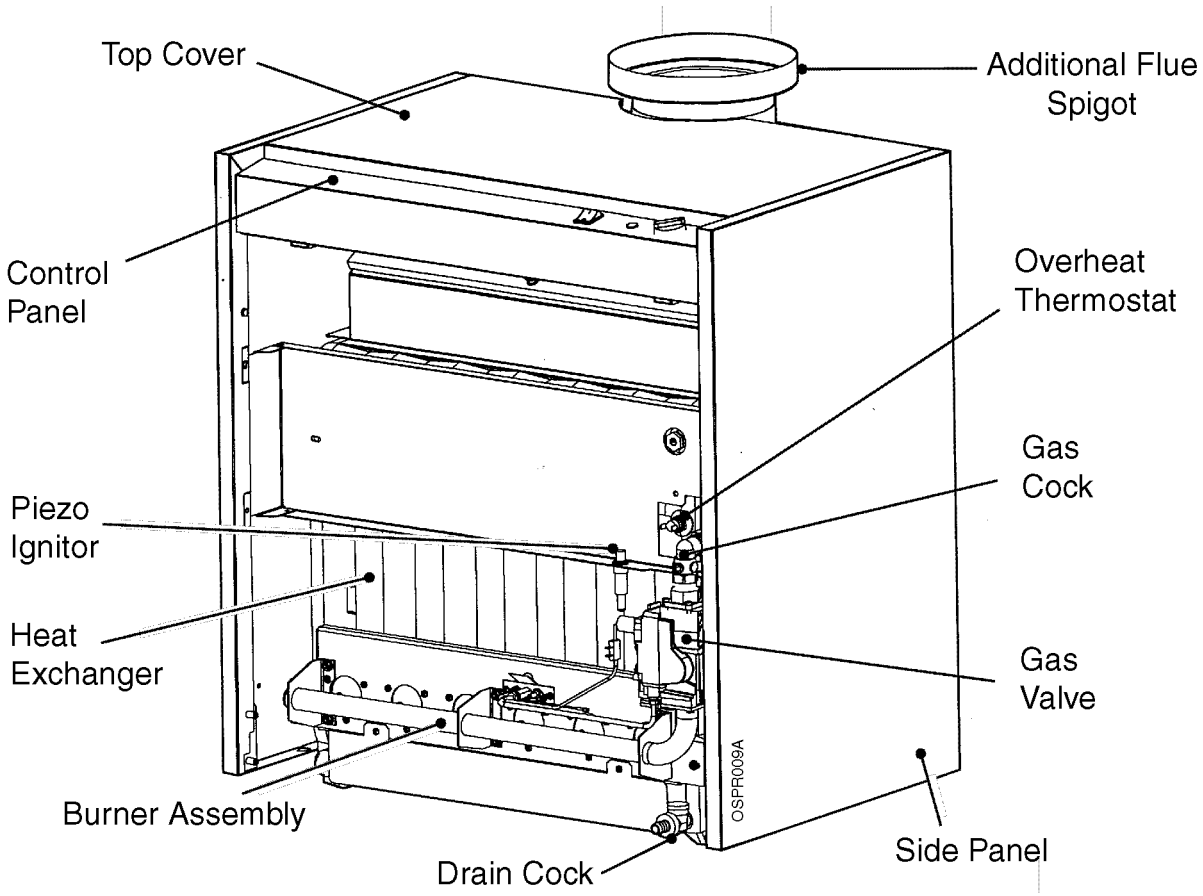

Gas Valve

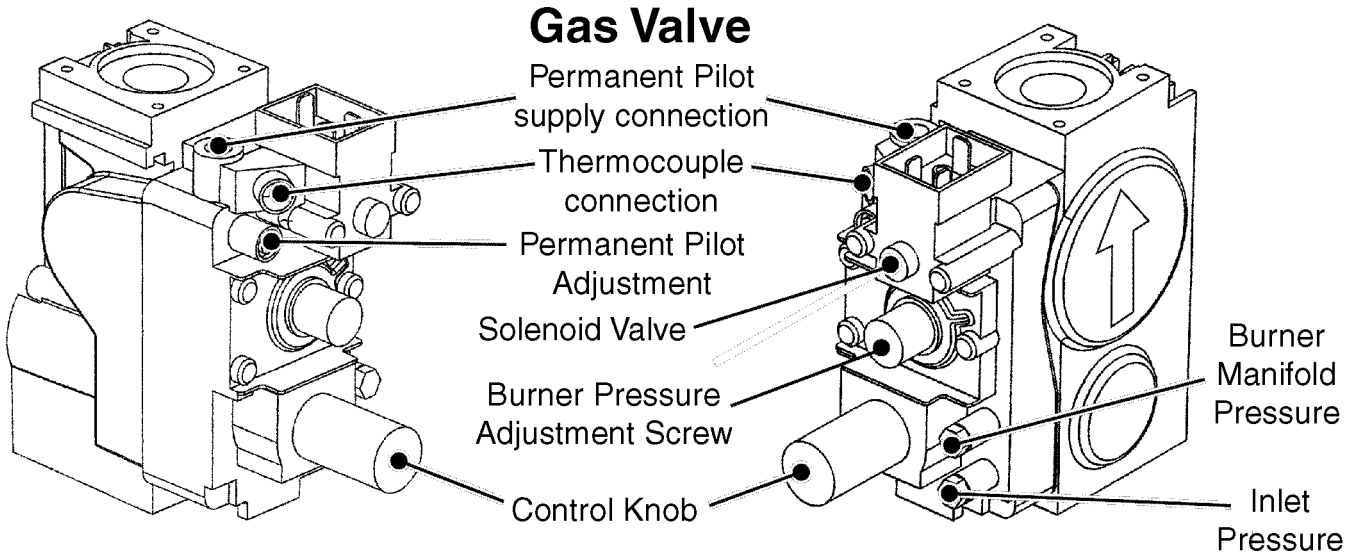

Fig. 13

Important

The commissioning and boiler adjustment must only be carried out by a suitably qualified personnel. Potterton Myson Ltd. offer this service on a chargeable basis.

Important

When purging and testing the gas supply for gas soundness open all windows and doors in the room. Extinguish all naked lights, cigarettes, pipes, etc.

3.1 Commission the Boiler

Open Vented Systems - Remove the pump and flush the system thoroughly with cold water. Re-fit the pump. Fill and vent the system then check for leaks.

Sealed Systems - The system can be filled using a sealed system filler pump with a break tank or by any other method approved by the Local Water Authority. Refer to Section 1.6, 'The System' on Page 9 of these instructions.

Remove the pump and flush the system thoroughly with cold water. Re-fit the pump. Fill and vent the system until the pressure gauge registers 1.5 bar (21.5 lbf/in2) and check for leaks. Raise the pressure until the safety valve lifts, this should occur within ± 0.3 bar of the preset lift pressure of 3 bar. Release water to attain the correct cold fill pressure.

Step by Step Commissioning (tick box when done)

1 The whole of the gas installation must be checked for soundness and purged in accordance with BS 6891. ☐

2 Check the water system for leaks and rectify as necessary. ☐

3 Preliminary electrical system checks must be carried out. They are:- Earth Continuity, Short Circuit, Polarity & Resistance to Earth. ☐

4 Re-fit the front cover and controls panel. ☐

5 Set the rotary boiler switch on the user controls to its minimum position and boiler Standby switch to 'O' Off. ☐

6 If a programmer is fitted, set to the 'Off' position. ☐

7 Turn the boiler gas service cock to the 'On' position and then turn On the main gas supply. ☐

8 Ensure the system is full of water and that the pump, radiator and any other isolating valves are open. ☐

9 Switch On the main electricity supply at the isolating switch or plug and socket. ☐

10 If a programmer is fitted set it to the 'On' position and check that the room and cylinder thermostats, where fitted are set to high temperatures. ☐

11 i. Press control knob in lightly and turn. Align off ● position with marker ▽. ☐

ii. Press control knob in lightly and turn. Align ignition position ✱ with marker ▽.

iii. Press control knob in firmly and hold, at the same time press the ignition button. The pilot flame should be visible at the pilot window. If not press the ignition button until the flame is established.

iv. When the flame is established hold the control knob in for approximately 20 seconds before releasing. The pilot flame should remain alight.

v. Press control knob in lightly and turn, align full flame position 🔥 with marker ▽.

vi. Switch the boiler Standby switch to On.

12 With the main burner running, check for gas soundness around the boiler using leak detection fluid. ☐

13 Allow the system to reach maximum working temperature and examine for leaks. Set the boiler Standby switch to 'O' and drain the system whilst still hot. ☐

Note: Should the boiler fail to operate correctly refer to the Fault Finding Guide on Page 26, and the boiler wiring diagram on Page 24 for further information.

14 Re-fill and vent the system making a final check for leaks. ☐

On sealed systems adjust to the correct cold fill pressure. Set the pressure gauge pointer to the system design pressure.

If a by-pass circuit is fitted the by-pass valve should be adjusted with the boiler operating under minimum load conditions to maintain sufficient water flow through the boiler to ensure that the overheat thermostat does not operate under normal conditions.

spares & parts online IBASIS.CO.UK ©

3.2 Final Adjustments

1 Use a pressure gauge to check the inlet and burner pressures. See the Technical Data section for figures.

2 Turn the boiler on and allow to run for 10 minutes.

3 Check that the inlet pressure is 20 mbar Natural Gas (G20) and 37 mbar for Propane (G31).

4 Check that the burner pressure is in accordance with the information in the Technical Data section.

5 If burner pressure adjustment is required turn the pressure adjusting screw as required - See Fig. 13.

6 Check at the gas meter that the gas rate is correct.

7 Shut down the boiler, remove the pressure gauges, re-fit the screws and check for gas soundness.

8 Re-fit the front door.

Control Thermostat
At its minimum and maximum settings, the thermostat should control the water flow temperature at approximately 55 °C - 85 °C.

Set the boiler Standby switch to OFF and check that the main burner shuts down.

Pilot Burner
The pilot is pre-set and no adjustment is required. When lit the pilot flame envelope should just cover the electrode tip. If the pilot flame is not as described, replace as covered in Section 4.6 - Servicing & Replacement of Parts.

Overheat Thermostat
The overheat thermostat is pre-set and no adjustment is possible. It will require manual re-lighting if an overheat condition occurs (the pilot will extinguish).
Re-light as detailed on Page 18.

Other Boiler Controls
No further setting or checking is necessary as all boiler mounted controls are designed so that if a fault should occur they will fail safe.

External Controls
Check that any other external controls connected in the system, such as clocks or thermostats are correctly set and control the boiler as required.

Spillage Device
Temporarily block the flue and check that the boiler shuts down within 2 minutes (if the boiler fails to shut down replace the spillage device as shown in section 4.3 of the Service and Replacement of Parts).
Unblock the flue spigot and the boiler should automatically relight within 10 minutes.

3.3 Instruct the User

On completion of the installation, the installer should demonstrate the operation of the boiler and its associated controls.

3.4 Advise the User

1 If a programmer is fitted set the time and programme the required settings.

2 Hand the Instructions for Use, these Installation & Service Instructions (and the programmer instructions) to the User and instruct in the safe operation of the boiler and controls.

3 Advise the User of the precautions necessary to prevent damage to the system and to the building in the event of the system remaining inoperative during frost conditions.

4 Advise the User that for continued efficient and safe operation of the boiler it is important that adequate servicing is carried out at least once a year by a Potterton Service Engineer or a C.O.R.G.I. Registered Installer.

5 Leave a permanent card attached to the boiler giving:
a. Name and address of installer.
b. Date of installation.

Read these: To ensure continued efficient operation of the appliance, it is recommended that it is checked and cleaned as necessary at regular intervals.

The frequency of servicing will depend upon the particular installation conditions and usage but in general once per year should be adequate.

It is the law that any service work must be carried out by a competent person who is C.O.R.G.I. Registered.

Before servicing, fire the appliance and check that the flames are blue. Yellow flame and excessive lifting indicate poor combustion.

WARNING: Before commencing work set the boiler standby switch to 'O' Off and allow the appliance to cool, isolate the electricity supply.

If the gas valve is to be removed turn off the gas supply at the appliance service cock.

IMPORTANT: Always test for gas soundness after completing any servicing of gas carrying components and carry out functional checks of controls.

IMPORTANT: Ensure that the outer white case is correctly fitted.

Notes on Cleaning Boiler Components

Heat Exchanger
Place a sheet of paper under the heat exchanger (after removing the burner assembly) then using the brush (Supplied with the boiler), scrape the flueway fin surfaces in a downward movement. This will ensure that most of the deposits will be collected on the paper.

Burner
Brush the burner top and check that the flame ports are clear. Any blockage may be removed with a fine wire brush. Turn the burner upside down and tap gently to remove any debris (Protect the electrode).

Electrode
If the electrode requires cleaning wipe the surface using a cleaning fluid.

Main Injectors
Omit this operation if the gas rate is correct, otherwise clean by blowing through. Do NOT clear the injectors with a pin or wire.

Flue
Inspect the draft diverter and flue tube for blockage, condensation and integrity, rectify if necessary.

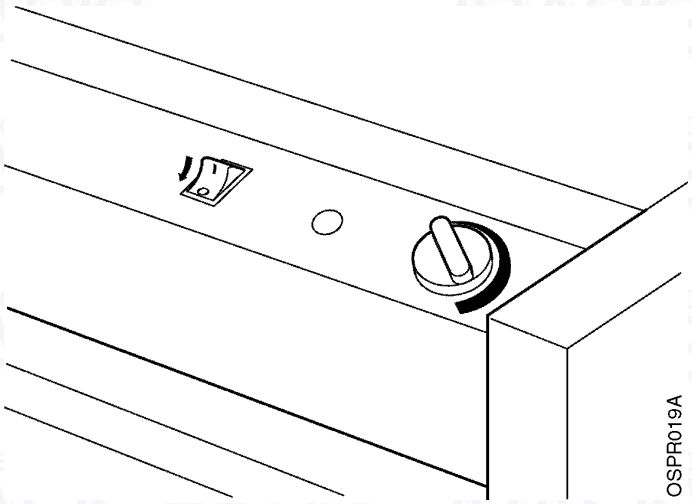

4.1 General Access

Warning: Before attempting to remove any component from the appliance first disconnect the mains electricity supply by removing the plug from the wall socket or by switching off the appliance at the external isolating switch and isolate the gas supply.

Note: The 'O' (Off) position on the boiler standby switch will leave parts of the boiler Live.

If the appliance gas valve is to be removed it will be necessary to isolate the gas supply at the appliance isolating valve.

Important: After removal or replacement of any gas carrying component a test for gas soundness must be made and functional check of the controls carried out.

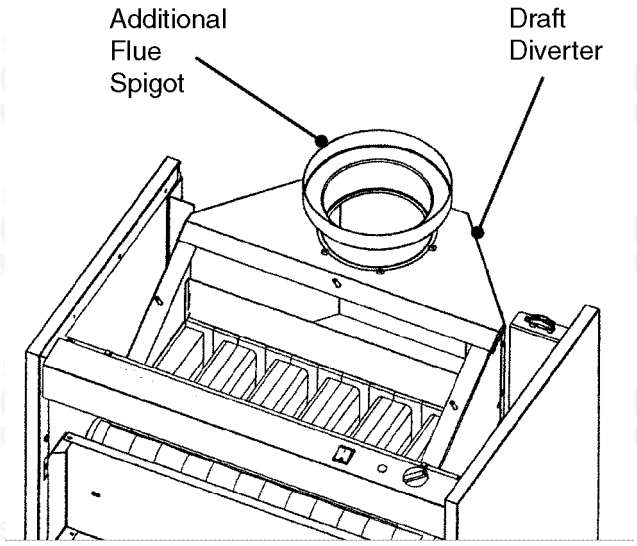

Re-assemble all parts in reverse order.

1. Remove the front door by pulling forward then lifting up, see Fig. 15.
2. Remove the top panel - 2 screws at rear, pull upwards and lift off.
3. Lift control panel onto hinges, drop forward, remove 2 screws and pivot forwards.
4. Lift off the metal shield.

4.2 Control Panel

- Gain General Access - See 4.1

1. Disconnect gas valve and boiler stat & TTB connector.
2. On re-assembly refer to Fig. 12.

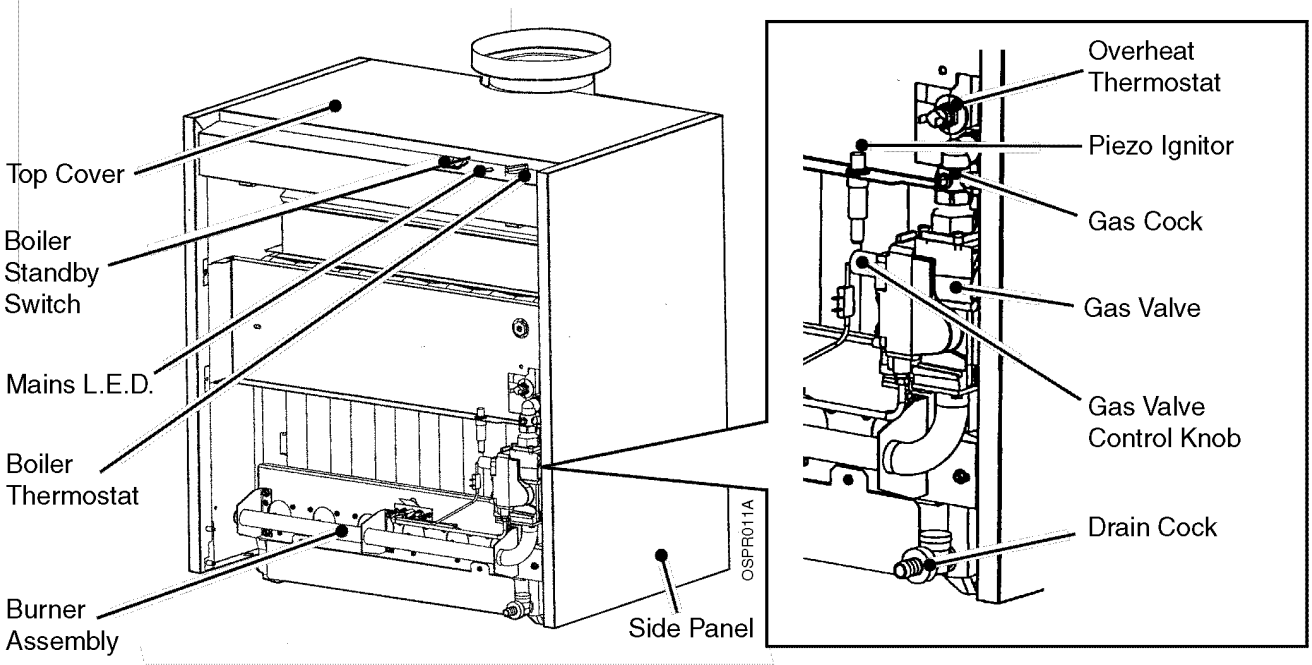

Fig. 14

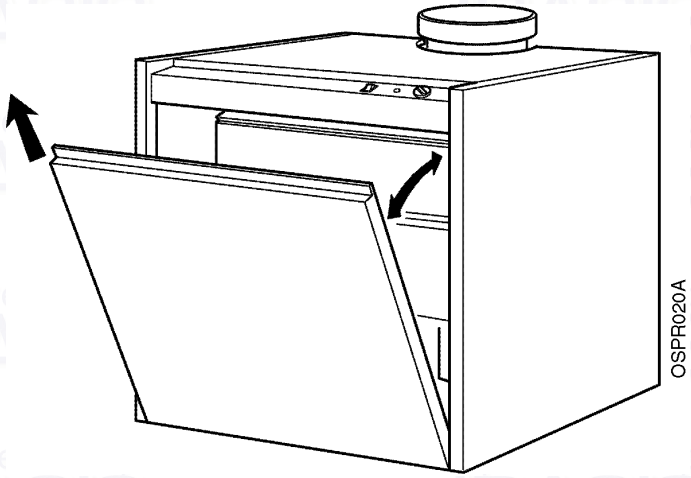

Fig. 15

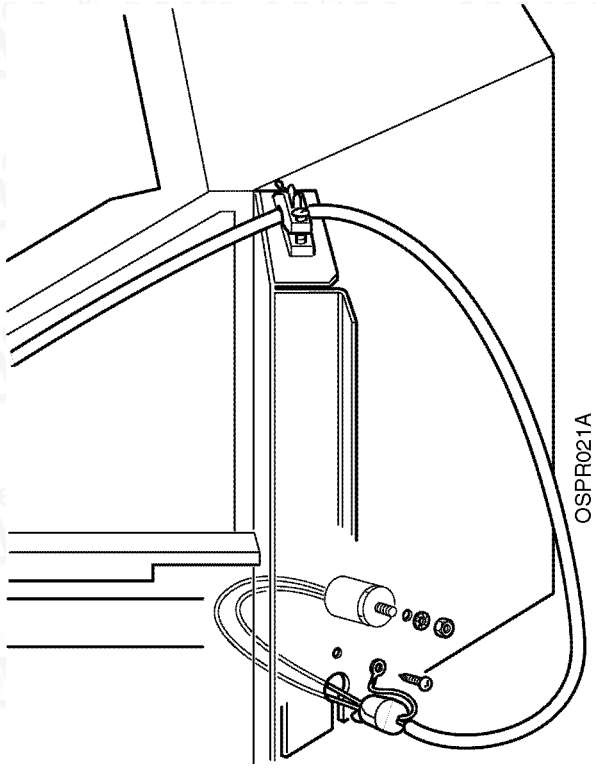

Fig. 16

4.3 TTB Thermostat

- Gain General Access - See 4.1

1. Disconnect the TTB connector, unscrew the TTB thermostat from the draft diverter and open the cable clamp. Unscrew earth connection, see Fig. 16.
2. Re-assemble in reverse order.

Note: This device is a safety feature and as such it should not be disabled or interfered with. Only Potterton parts should be used for replacement. If the unit continues to trip then the flue should be checked for spillage. Always check the operation of the TTB after every service.

4.4 Boiler Thermostat

- Gain General Access - See 4.1

1. Open the control panel.
2. Remove spring clip on the outside of the thermostat pocket and pull it clear of the heat exchanger.
3. Remove the user thermostat control knob.
4. Unscrew the user thermostat, note the wire connections (each wire is numbered) and remove the wires.
5. Re-assemble in reverse order.

4.5 Overheat Thermostat

- Gain General Access - See 4.1

1. Disconnect the wires from the thermostat.
2. Unscrew the thermostat from the conducting 'Pocket'.
3. Re-assemble in reverse order.

4.6 Burner Assembly

- Gain General Access - See 4.1

1. Close the gas cock.
2. Disconnect the gas pipe from the gas valve.
3. Disconnect the wiring to the control panel and the overheat thermostat.
4. Remove the igniter.
5. Unscrew the burner plate - 2 nuts.
6. Remove the gas valve/burner assembly and lift over the location peg.
7. Pull the assembly forwards, check the condition of the burner and thermocouple - replace if necessary.
8. Re-assemble in reverse order.

Injector: Use a 12mm spanner to remove the injector, use a new sealing washer on re-assembly.

4.7 Gas Valve

- Gain General Access - See 4.1

1. Remove burner assembly - See 4.6
2. Disconnect gas valve lead.
3. Unscrew pilot tube and thermocouple.
4. Remove inlet and outlet plates.
5. Re-assemble in reverse order.
6. Check burner pressure and gas rate against the data badge using the pressure test point and gas meter, shown in Fig. 13.

4.8 Pilot Interrupter

- Gain General Access - See 4.1

1. Remove interrupter wires from overheat thermostat.
2. Unscrew thermocouple.
3. Re-assemble in reverse order.

4.9 Pilot Assembly

- Gain General Access - See 4.1

1. Unscrew igniter.
2. Unscrew thermocouple and pilot tube.
3. Remove 2 screws and remove pilot assembly.
4. Re-assemble in reverse order.

4.10 Burner

- Gain General Access - See 4.1

1. Remove burner assembly - See 4.6
2. Remove burner insulation.
3. Unscrew 3 screws in burner plate and remove burner.
4. Re-assemble in reverse order.

4.11 Cleaning Heat Exchanger

- Gain General Access - See 4.1

1. Remove burner assembly - See 4.6
2. Remove 4 wing nuts holding top panel on.
3. Remove brush from holder and clean as required.
4. Re-assemble in reverse order.

Note: If insulation is to be removed wet first to reduce fibre breakdown.

Important: After any work carried out involving gas carrying components a full gas soundness test procedure should be carried out in accordance with BS 6891.

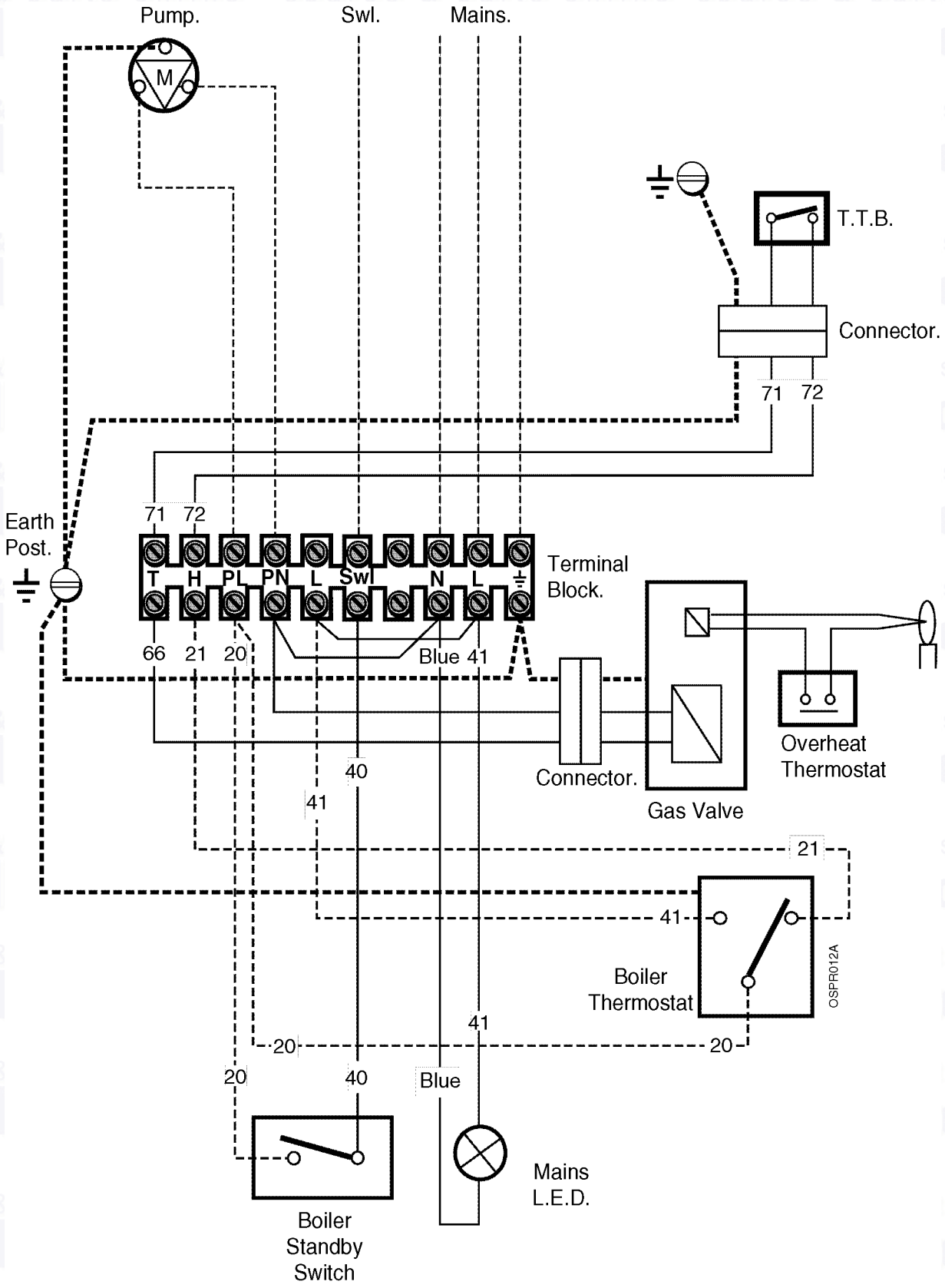
Pump.
Swl.
Mains.
M
T.T.B.
Connector.
71
72
Earth
Post.
71
72
T
H
PL
PN
L
Swl
N
L
Terminal
Block.
66
21
20
Blue
41
Connector.
Gas Valve
Overheat
Thermostat
40
41
21
41
Boiler
Thermostat
OSPR012A
41
20
20
20
40
Blue
Mains
L.E.D.
Boiler
Standby
Switch

Fig. 17

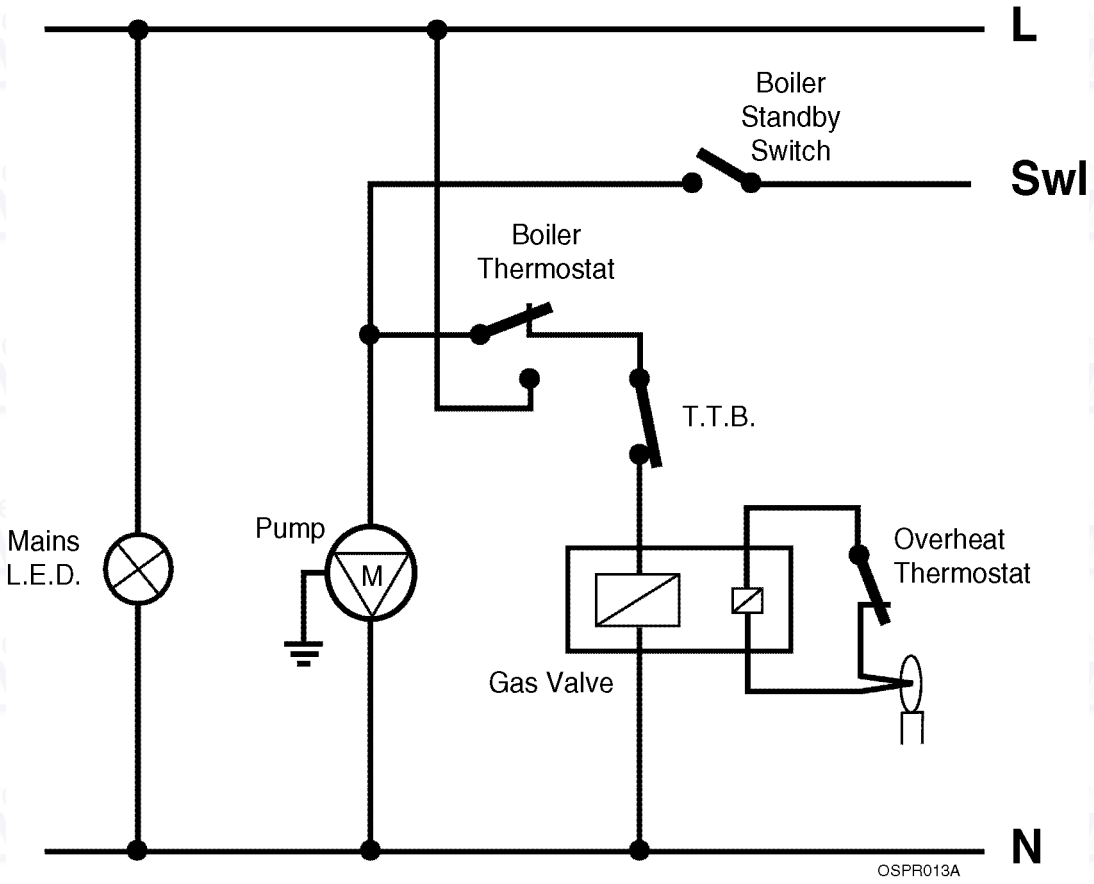
L
Boiler
Standby
Switch
Swl
Boiler
Thermostat
T.T.B.
Mains
L.E.D.
Pump
M
Overheat
Thermostat
Gas Valve
N
OSPR013A

Fig. 18

1. Electrical Safety Checks

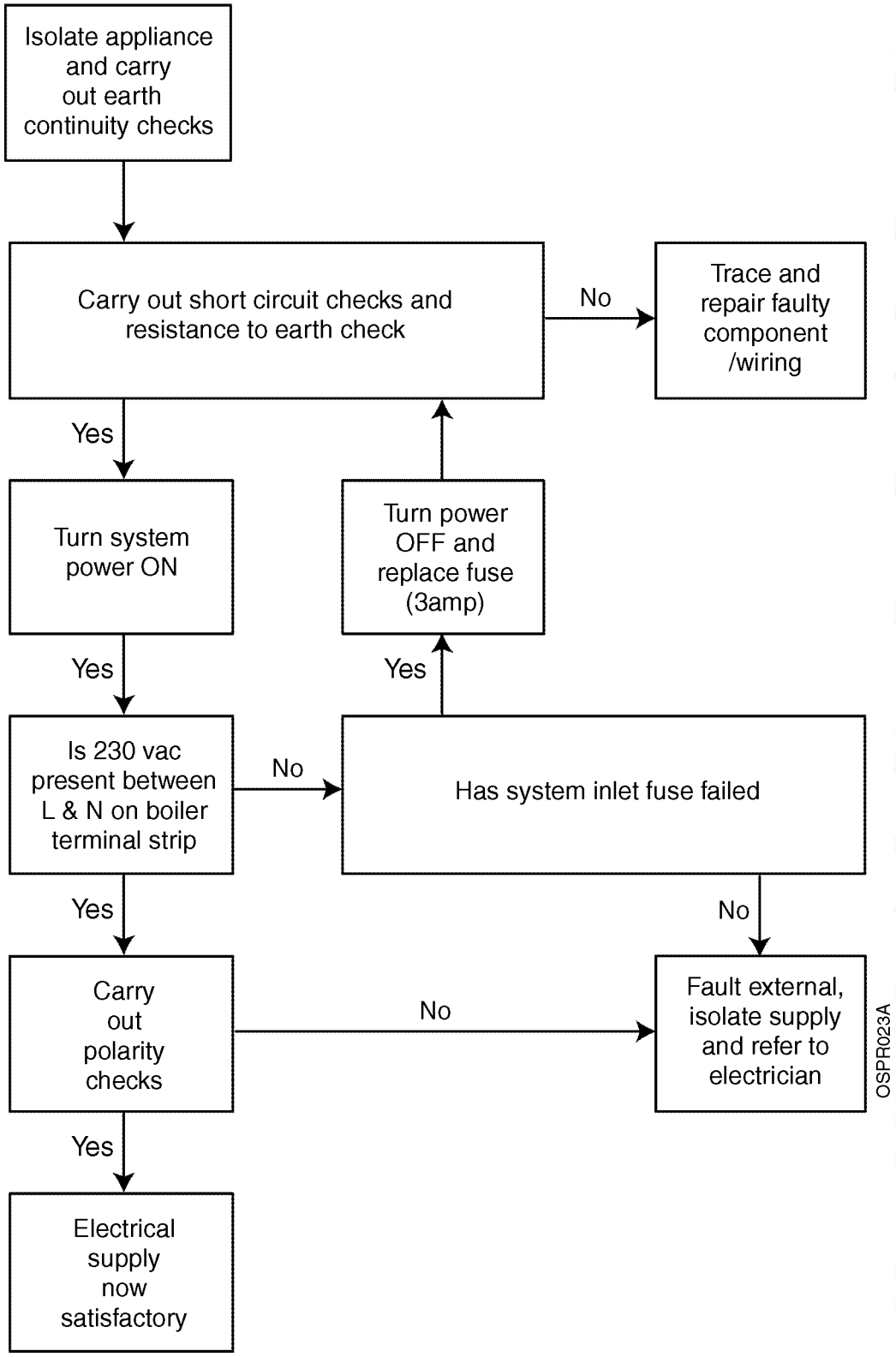

2. General Fault Finding

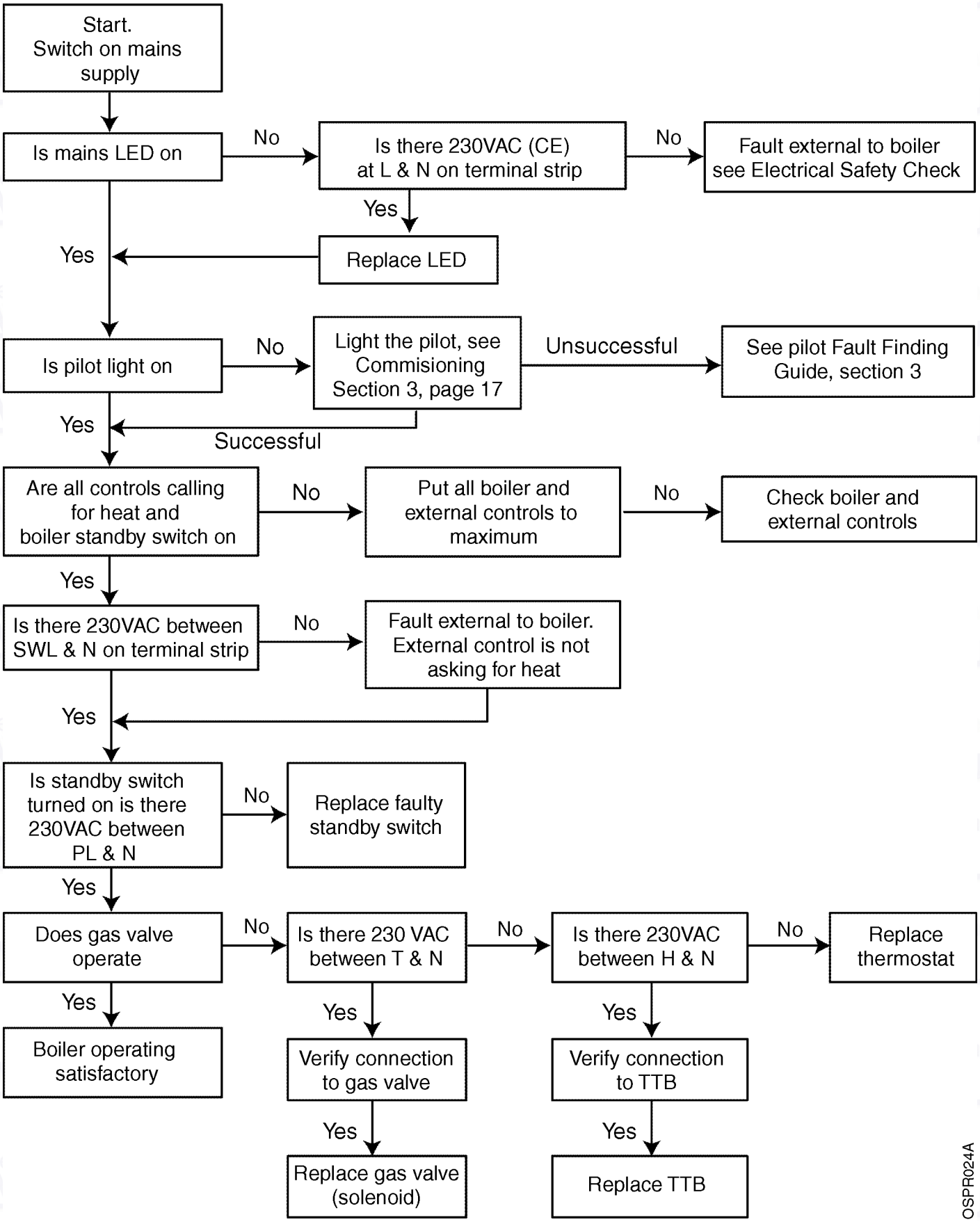

spares & parts online IBASIS.CO.UK JK

3. Pilot Fault Finding

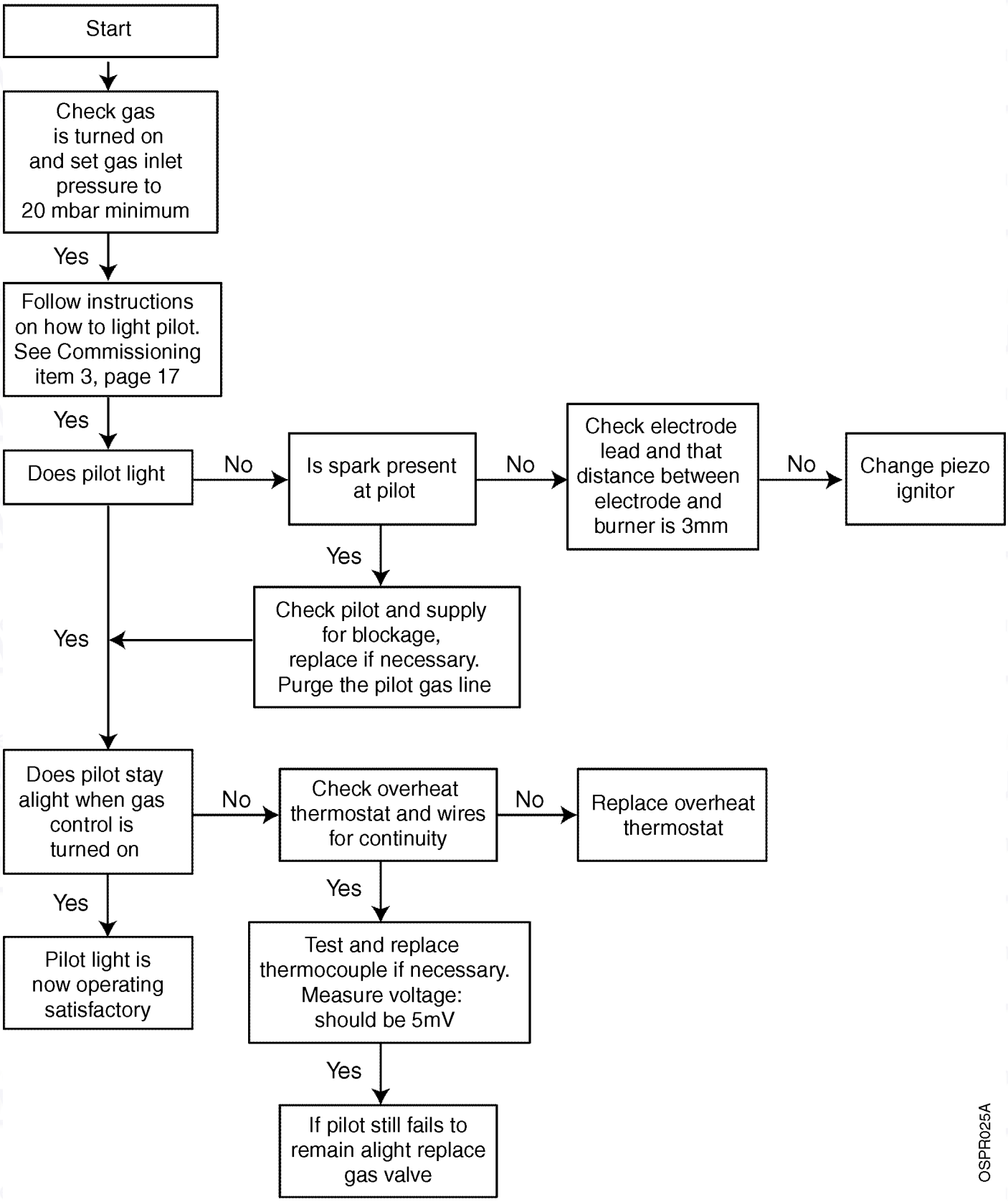

Fig. 19

7. Short List Of Spare Parts - Page 29

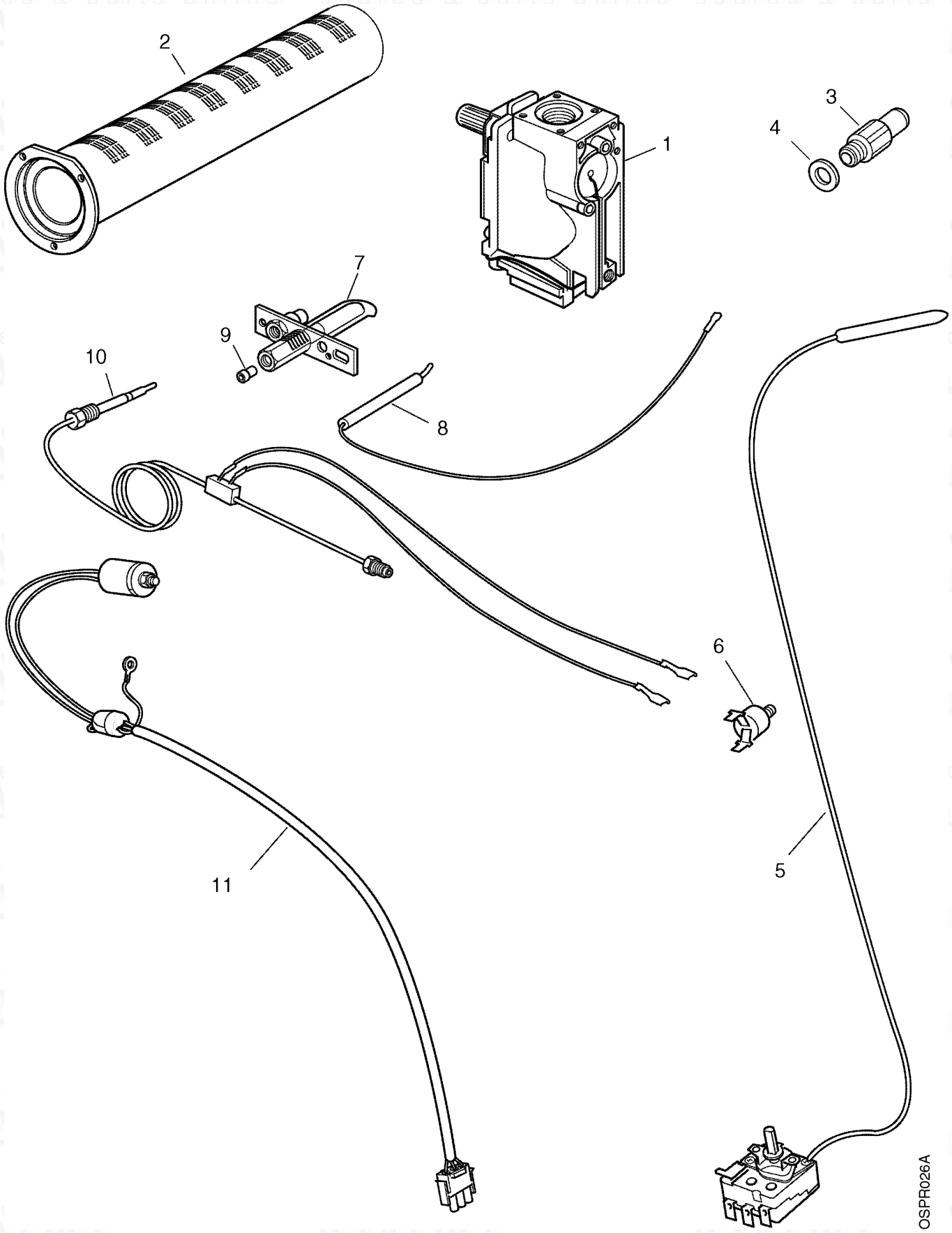

spares & parts online IBASIS.CO.UK

7. Short List Of Spare Parts - Page 30

Item No.	Catalogue No.	Description	Quantity	G. C. No.
1	8000856	Gas Valve - SIT	1	E03-650
2	8000854	Burner Bar - Polidoro	A/R	E03-614
3	8000860	Injector	A/R	E03-653
4	8000859	Injector Washer	A/R	E03-652
5	8000909	Thermostat	1	E03-683
6	8000871	Limit Thermostat	1	E03-718
7	8000830	Pilot Burner	1	E03-639
8	8000832	Spark Electrode	1	E03-631
9	8000835	Pilot Injector	1	E03-643
10	8000838	Thermocouple	1	E03-642
11	8001171	TTB Spillage Thermostat Assembly	1	E03-685

Back Page

spares & parts online IBASIS.CO.UK ©