POTTERTON

Boiler Module - G.C. No. 41 607 89
20 Litre Tank Module - G.C. No. 114 792
50 Litre Tank Module - G.C. No. 114 793

Installation & Service Instructions

Envoy Flowsure & Envoy Flowsure+

Wall Mounted Fan Powered Balanced Flue Gas Condensing Combination Boiler and Storage Combination Boiler

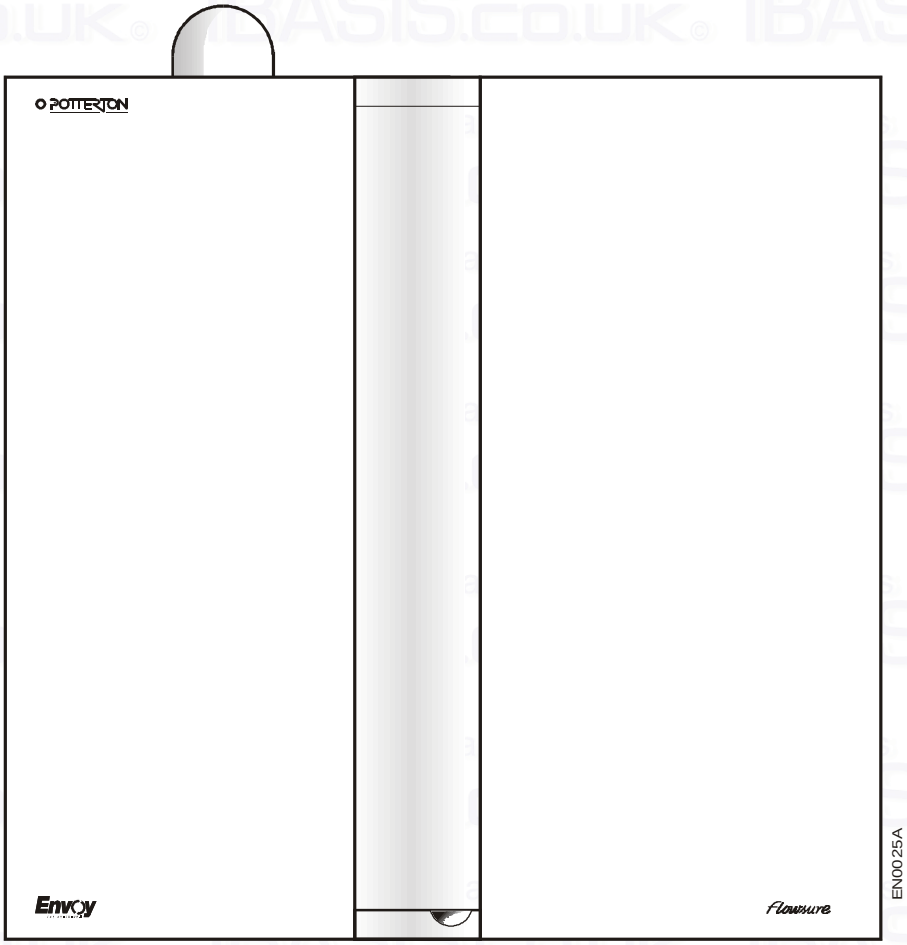

THE GAS SAFETY (INSTALLATION AND USE) REGULATIONS 1994.

‘‘ In your own interest, and that of safety, it is law that all gas appliances are installed by competent persons, in accordance with the above regulations. Failure to install appliances correctly could lead to prosecution.’’

The polythene bags used for packaging are a potential hazard to babies and young children and MUST BE DISPOSED OF IMMEDIATELY.

Installation must be in accordance with the Installation & Service Instructions and the rules in force.

LEAVE THESE INSTRUCTIONS WITH THE USER FOR USE ON FUTURE CALLS

For Use With Natural Gas (G20) Only At 20mbar For Use in GB & IE

IMPORTANT
PLEASE READ THIS BOOK BEFORE INSTALLING, OPERATING OR SERVICING THIS BOILER.

Contents – Page 2

Technical Data ... 3
1 Installation Requirements ... 5
2 Installation ... 12
3 Commissioning ... 16
4 Boiler Display & Controls ... 19
5 Servicing & Replacement of Parts ... 22

Servicing:

Preparation of the Boiler ... 22
Removing Fan ... 23
Removing Combustion Chamber & Flue Hood ... 23
Examination of Flueways & Cleaning ... 24
Re-assembly of Boiler ... 24

Replacement of Parts

1 Fan ... 25
2 Hot Surface Igniter ... 25
3 Flame Sensor ... 25
4 Insulation ... 25
5 Burner ... 26
6 Syphon ... 26
7 Flue Hood/Combustion Chamber Seals ... 26
8 Injector ... 26
9 Gas Valve Assembly ... 26
10 Sight Glass ... 27
11 Water Temperature Sensor ... 27
12 Diverter Valve Head ... 27
13 Case Temperature Sensor ... 27
14 Boiler Control Board ... 28
15 Boiler Control Board Fuses ... 28
16 Water Components ... 29
Pump ... 29
Diverter Valve ... 29
Water Pressure Switch ... 29
Water Pressure Gauge ... 29
6 Fault Finding ... 30
7 Boiler Internal Wiring ... 35
8 Boiler Wiring Layout ... 36
9 Short List of Spares ... 37

Introduction - Page 2

The Potterton Envoy Flowsure (20l) and Flowsure+ (50l) are high efficiency, lightweight, automatically controlled wall hung gas fired condensing combination boilers with Storage Tanks. The flue system is room sealed and fan powered.

The combination boilers which are designed to provide domestic hot water and/or central heating must be used on FULLY PUMPED sealed systems only.

The combination boiler will adjust automatically to provide central heating outputs between 23.45 kW and 14.8 kW to suit the system requirements.

Domestic hot water has priority over the central heating system and is generated within the integral indirect storage tank.

The combination boilers can be supplied with either of the following flue systems:-

Horizontal
1 metre, 1.5 metre, 2 metre, 2.5 metre or 3 metre

Vertical
1 metre, 1.5 metre, 2 metre, 2.5 metre or 3 metre

Accessories

The following Potterton Myson controls are recommended for use with your boiler:-

Electronic Timer
Room Thermostat PRT2 or PRT100
Frost Thermostat PRT100FR
Thermostatic Radiator Valve

Data sheets describing these products are available on request.

Optional Extras

Part No. 236349	Terminal Wall Plate - where necessary can be fitted to the outside face to improve the appearance, after making good around the terminal.
Part No. 236591	Terminal Guard.
Part No. 430080	Flat Roof Flashing Kit - for use with Vertical Flue.
Part No. 430081	Pitched Roof Flashing Kit - for use with Vertical Flue.
Part No. 236893	Outdoor Weather Compensator

Technical Data – Page 3

Boiler Details

Heat Input	kW	26.86
	Btu/hr	91,600
Heat Output, NON-CONDENSING	kW	23.45
	Btu/hr	80,000
Heat Output, CONDENSING	kW	25.0
	Btu/hr	85,400
Gas Rate	M3/h	2.56
	ft3/hr	90.4
Burner Pressure	mb	12.2
	in/wg	4.9
Injector Size	mm	4.2
Classification	I2H. C1. C3. IP20	
Burner	Furigas Pre-Mix	
Igniter	Norton 401S Hot Surface	
Flame Detector	Morgon Matroc	
Gas Control Valve	SIT Nova Mix 1 - 8 Air Gas Ratio	
Electrical Supply	230V ~ 50Hz	
Fuse Rating - External	3A	
Packed Weight - Boiler	52kg	
Gas Supply Connections	15mm Compression	
Flow Connections	22mm Compression	
Return Connections	22mm Compression	
Condense Discharge Connection	21.5mm (¾"Plastic Compression)	
Maximum Flow Temperature	85°C	
Expansion Vessel	13.5 litre (charge pressure 1.0 bar)	
Pressure Relief Valve	3 bar	

Boiler Details Cont...

Flue Size	100mm Concentric
Water Capacity	3.4 litre

Storage Tank Details - 20 Litre

Packed Weight	20kg
Full Weight	39kg
Max. Cold Water Supply Pressure	10 bar
Normal Secondary Operating Pressure	Mains Pressure
Water Capacity	17.0 litres primary 1.7 litres secondary

Storage Tank Details - 50 Litre

Packed Weight	20kg
Full Weight	65kg
Max. Cold Water Supply Pressure	10 bar
Normal Secondary Operating Pressure	3.5 bar
Secondary Expansion Vessel Charge Pressure	3.5 bar
Water Capacity	2.9 litres primary 41.8 litres secondary
T & P Valve	90°C / 7 bar
Pressure Relief Valve	6 bar

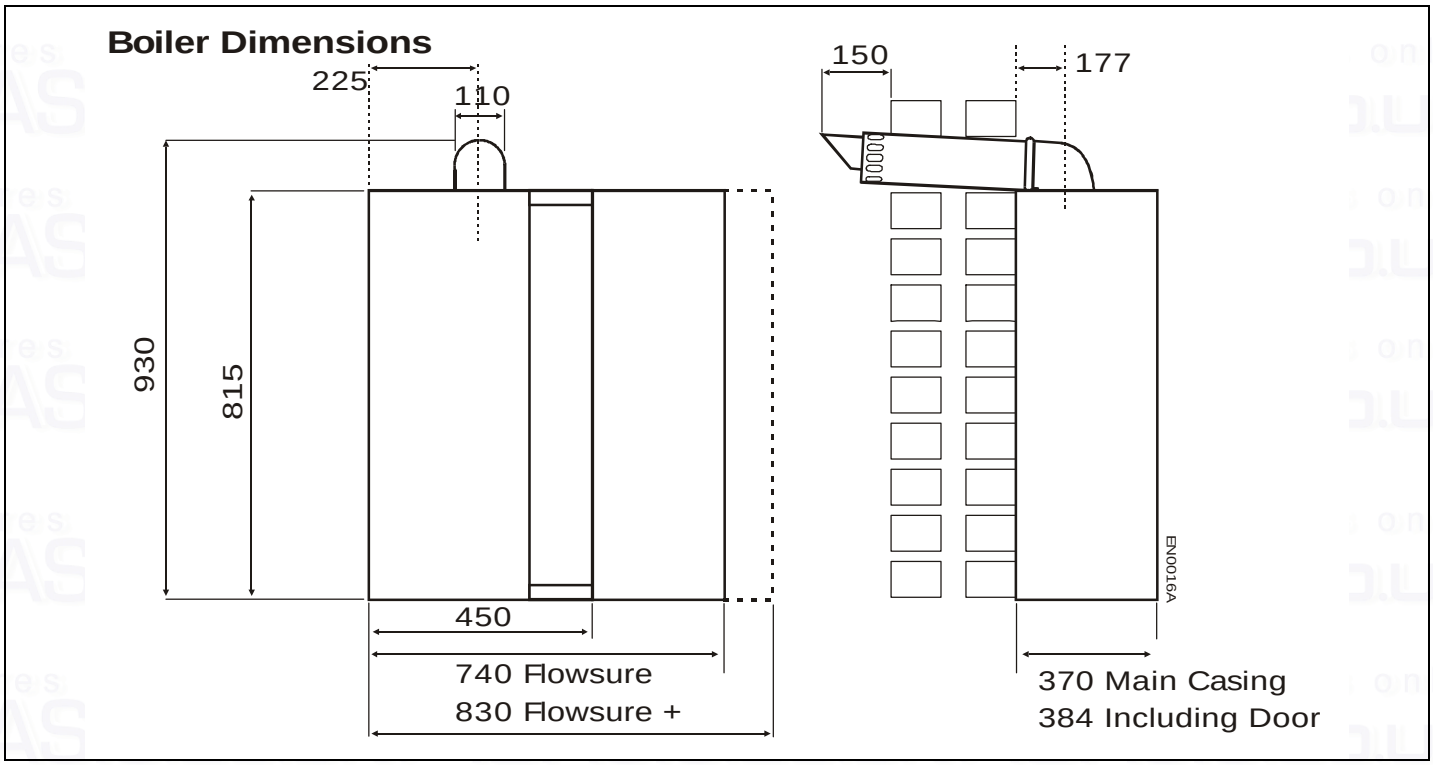

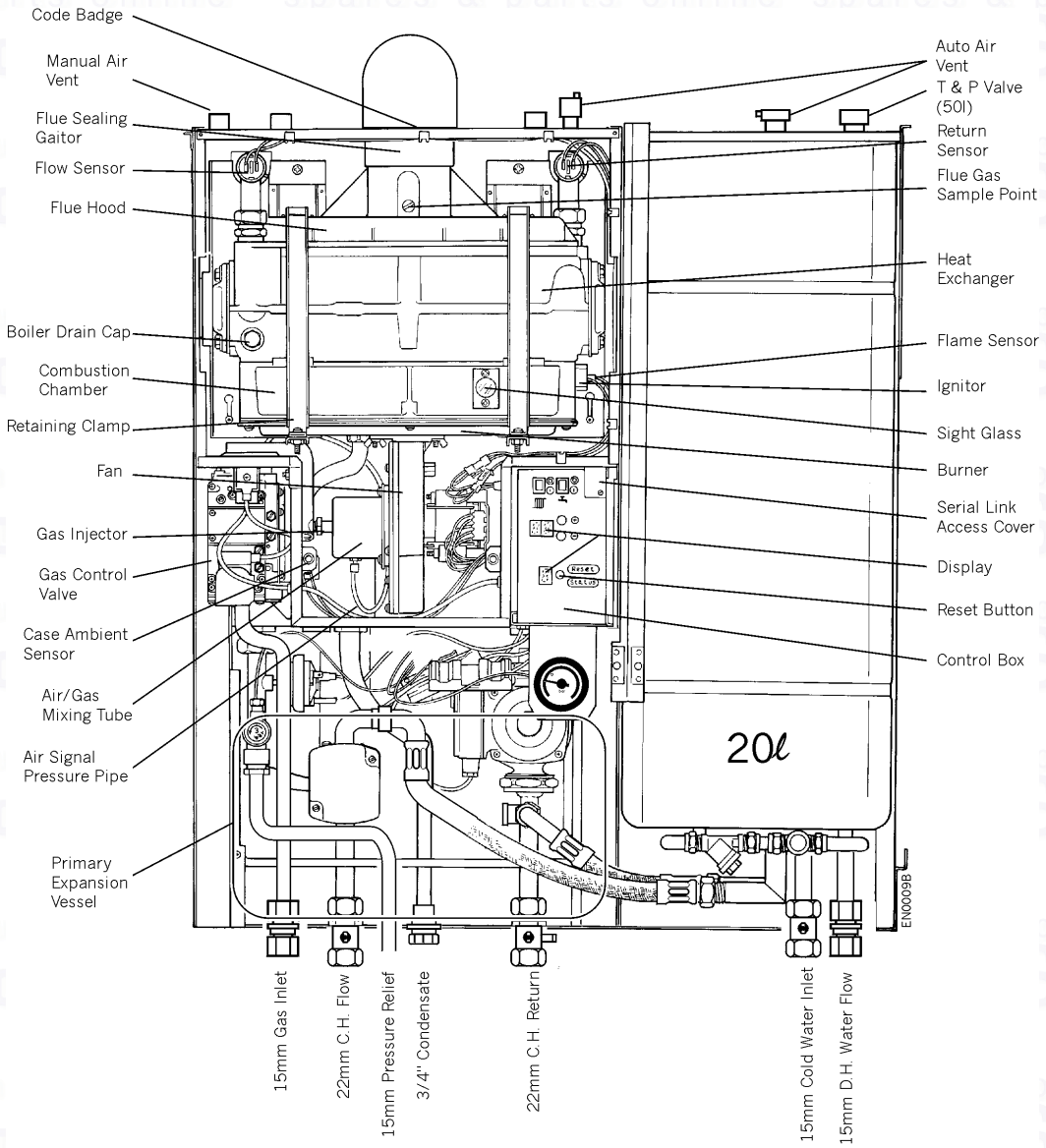
Code Badge
Manual Air Vent
Flue Sealing Gaitor
Flow Sensor
Flue Hood
Boiler Drain Cap
Combustion Chamber
Retaining Clamp
Fan
Gas Injector
Gas Control Valve
Case Ambient Sensor
Air/Gas Mixing Tube
Air Signal Pressure Pipe
Primary Expansion Vessel
Auto Air Vent
T & P Valve (50l)
Return Sensor
Flue Gas Sample Point
Heat Exchanger
Flame Sensor
Ignitor
Sight Glass
Burner
Serial Link Access Cover
Display
Reset Button
Control Box
20ℓ
EN0009B
15mm Gas Inlet
22mm C.H. Flow
15mm Pressure Relief
3/4" Condensate
22mm C.H. Return
15mm Cold Water Inlet
15mm D.H. Water Flow

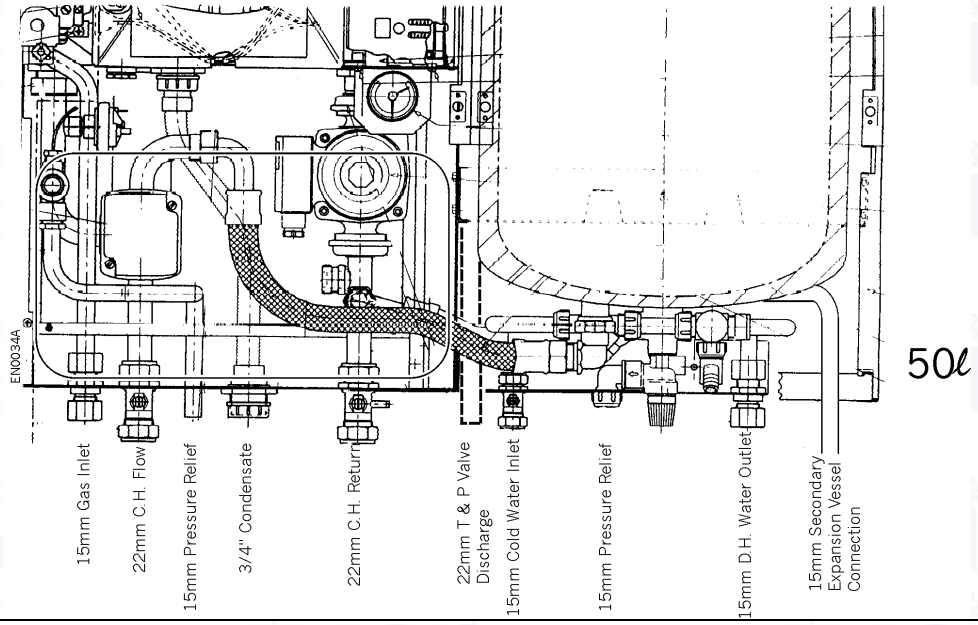
EN0034A
50ℓ
15mm Gas Inlet
22mm C.H. Flow
15mm Pressure Relief
3/4" Condensate
22mm C.H. Return
22mm T & P Valve Discharge
15mm Cold Water Inlet
15mm Pressure Relief
15mm D.H. Water Outlet
15mm Secondary Expansion Vessel Connection

Fig. 2

General Information

Prior to installation the boiler should be stored as directed on the carton and in a dry place. Both the user and manufacturer rely heavily on the installer, whose job it is to install the boiler and connect it to a correctly designed heating system. Acquaint yourself with the British Standards concerning installation requirements. If you need advice on any points, Potterton Myson's Service Operations will be pleased to help (see back page).

Samples of the Envoy Flowsure and Envoy Flowsure+ have been examined by Gastec, a Netherlands Notified Body. The range is certified to comply with the essential requirements of the Gas Appliance Directive 90/396/EEC, the Low Voltage Directive 72/23/EEC and shows compliance with the Electro Magnetic Compatibility Directive 89/336/EEC and are therefore permitted to carry the CE mark.

The appliance has been tested and approved by the WRc as meeting the requirements of G3 and L of the Building Regulations.

It is important that no external devices e.g. flue dampers, economisers etc, be directly connected to this appliance unless covered by these Installation and Service Instructions or otherwise recommended by Potterton Myson Ltd. in writing. If in doubt please enquire.

Any direct connection of a control device not recommended by Potterton Myson could invalidate the certificate and normal appliance warranty and could also infringe the Gas Safety Regulations. Manufacturers instructions must not be taken in any way as over-riding statutory obligations.

If the area of installation is recognised as a hard water area (above 200 p.p.m.), it is recommended that a suitable water treatment device of an electronic, magnetic or galvanic type be installed in the mains water supply.

Codes of Practice

The boiler and tank must be installed in accordance with the Gas Safety (Installation & Use) Regulations 1994, and the current issue of:-

I.E.E. Regulations.
Model Water Bye Laws.
Building Regulations.
Building Standards for Scotland.
Health and Safety Document No. 635. (The Electricity at Work Regulations 1989).

Health and Safety Information for the Installer and Service Engineer

Under the Consumer Protection Act 1987 and Section 6 of the Health and Safety at Work Act 1974, we are required to provide information on substances hazardous to health. Small quantities of adhesives and sealants used in the product are cured and present no known hazards. The following substances are also present.

Insulation and Seals

Material - Ceramic Fibre. Alumino - Silicone Fibre.
Description - Boards, Ropes, Gaskets.

Known Hazards - Some people can suffer reddening and itching of the skin. Fibre entry into the eye will cause foreign body irritation. Irritation to respiratory tract.

Precautions - People with a history of skin complaints may be particularly susceptible to irritation. High dust levels are only likely to arise following harsh abrasion. In general, normal handling and use will not present discomfort, follow good hygiene practices, wash hands before consuming food, drinking or using the toilet.

First Aid - Medical attention must be sought following eye contact or prolonged reddening of the skin.

Electricity Supply

A 230 volts ~ 50Hz, single phase electricity supply fused to 3A, must be provided in accordance with the latest edition of the IEE Wiring Regulations and any other local regulations that apply. The current rating of the wiring to the boiler must exceed 3 A and have a cross sectional area of at least 0.75mm in accordance with BS 6500, Table 16.

The supply to the boiler and its associated equipment should be controlled by an exclusive 3A fused double pole switch (having at least 3mm contact separation in both poles) so that complete isolation from the supply can be achieved to enable servicing work to be carried out in safety.

Gas Supply

A gas supply pressure of 20mbar is required at the inlet of the appliance. Performance data is based on use of reference gas G20. The meter and supply pipes must be capable of delivering this quantity of gas in addition to the demand from any other appliances in the house and must be governed at the meter.

Condensate Drain

The condensate outlet on the boiler is designed to accept 21.5mm plastic overflow pipe, which if possible should discharge into the household drainage system and have an internal termination. If this is not practical, discharge into an outside gully or soak away is acceptable. To avoid blockage of this pipe due to freezing it should be routed internally where possible and have sufficient fall over its entire length to dispose of condensate quickly. See British Gas 'Guidance Notes for the 'Installation of Domestic Gas Condensing Boilers'.

Location of Boiler and Tank

These boilers and tanks are not suitable for external installation and should not be fitted directly above a cooking appliance. The boiler and tank may be installed in any room, although particular attention is drawn to the requirements of the current IEE Wiring Regulations and in Scotland, the electrical provisions of the Building Standards applicable in Scotland with the respect to the installation of the appliance in a room containing a bath or shower.

Where a room-sealed appliance is installed in a room containing a bath or shower, any electrical switch or appliance control, utilising mains electricity should be so situated that it cannot be touched by a person using the bath or shower.

Where the installation of the boiler will be in an unusual position, special procedures may be necessary and BS6798 and BS5546 give detailed guidance on this aspect.

It should be noted that due to the high efficiency of this boiler a white plume of condensate will be emitted from the flue terminal, therefore care should be taken when selecting the terminal position.

Boiler Mounting Surface

The boiler and tank must be mounted on a flat wall, which may be of combustible material and must be sufficiently robust to take the weight of the boiler. The requirements of the Local Authorities and the Building Regulations must be adhered to.

Timber Framed Houses

If the boiler is to be installed in a timber framed building it should be fitted in accordance with the British Gas publication- Part 19 - Building and Kitchen Work. If in doubt advice must be sought from the local region of British Gas or from Potterton Myson.

Clearances around the Boiler and Tank

The following minimum clearances must be maintained after installation for correct operation and servicing of the boiler and tank.

Front:	15mm (610mm for servicing)
Sides:	5mm each side
Top:	140mm (from top of boiler case)
Bottom:	120mm

Ventilation

The room in which the boiler is installed does not require a purpose provided air vent.

If the boiler is installed in a cupboard or compartment, permanent air vents are required in the cupboard or compartment, one at high level and one at low level, either direct to the outside air or to a room. Both high level and low level air vents must communicate with the same room or must be on the same wall to outside air. Both the high level and low level vent must each have a free area as stated below. The free area of each vent may be halved if the ventilation is provided directly from outside.

High and Low air vent areas: 277 cm^2

If the boiler is installed in a cupboard or compartment with a door, allow at least 15 mm clearance between the front of the boiler and the door for air movement.

Flue Terminal and Ducting

The **Standard Horizontal Flue** system (Part No. 236346) is suitable for installations up to 1030mm, measured from the centre line of the boiler outlet to the outside face of the wall.

0.5 & 1 Metre Flue Extension kits (0.5m - Part No. 430092, 1m - Part No. 430085) are available to extend horizontal flues to a maximum length of 2920mm. The siting positions for horizontal flue terminals are shown in Fig. 3.

A Concentric Vertical Flue system is available (Part No. 236348) when used in conjunction with the One Metre Flue Extension kits is suitable for flue heights up to 3 metres to terminate through a roof.

The siting of the flue terminal through a roof is shown in Fig. 3.

Only the flue systems shown here can be fitted to the Envoy Flowsure and Flowsure+ boilers.

If the terminal is fitted less than 2m (6.6 ft) above a balcony, above ground or above a flat roof to which people have access then a suitable terminal guard must be provided and fitted.

A protective guard is available from the Potterton Myson Sales Office whose address and telephone number are shown on the rear cover. The guard (Part No 236591) must be securely fitted to the wall and centrally located over the flue terminal.

Where a flue terminal is installed less than one metre from a plastic, or painted gutter, or 500mm from painted eaves, an aluminium shield one metre long, should be fitted to the underside of the gutter or painted surface. A suitable wall plate should be fitted to the painted wall surface of a mobile home.

It is absolutely ESSENTIAL to ensure that products of combustion discharging from the terminal cannot re-enter the building, or any other adjacent building, through ventilators, windows, doors, natural air infiltration, or forced ventilation/air conditioning. If products of combustion are found to be re-entering any building, the appliance MUST be turned OFF IMMEDIATELY.

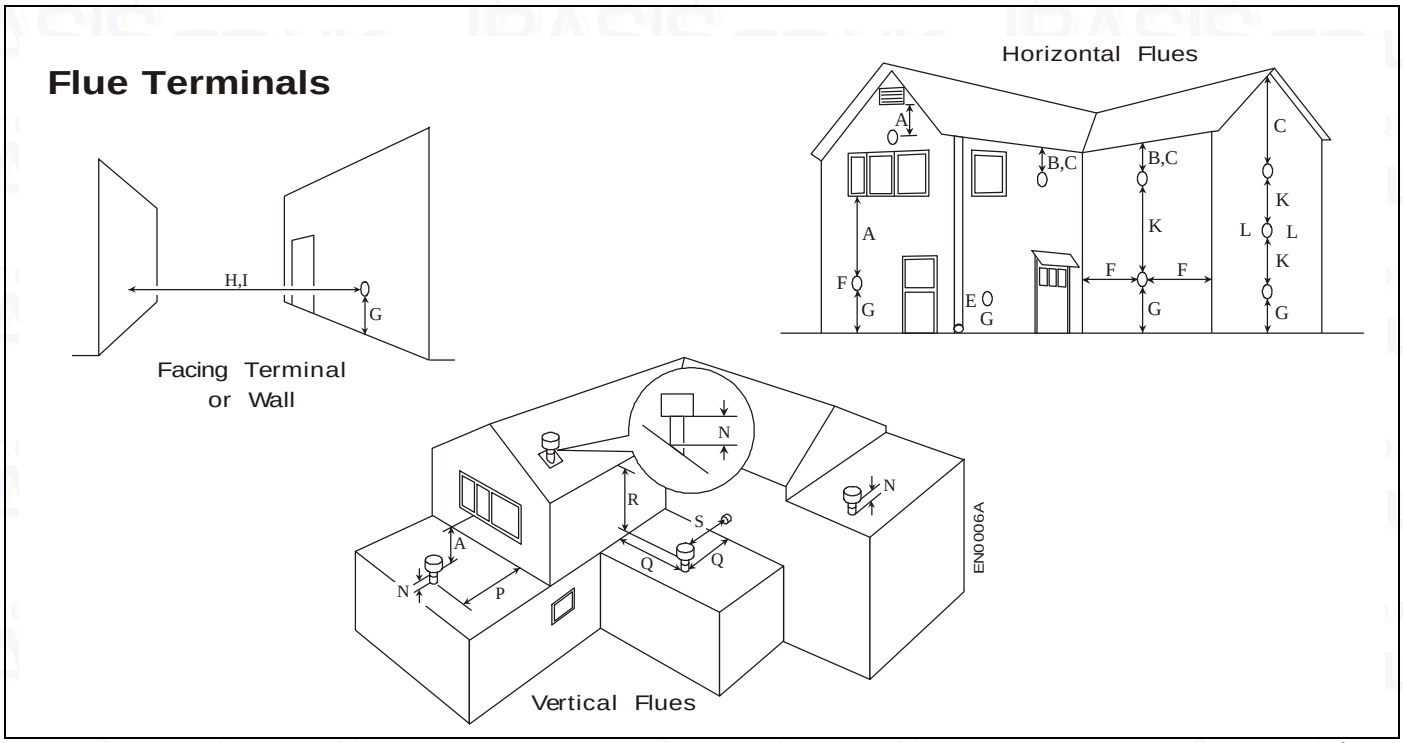

Fig. 3

Terminal position	Minimum spacing
A – Directly below an openable window, air vent or any other ventilation opening	300 mm
B – Below gutters, soil pipes or drain pipes	75 mm
C – Below eaves (Horizontal Flue Only)	200 mm
* – Below balconies/Carport Roof	Not Recommended
E – From vertical soil pipes or drain pipes	75 mm
F – From an internal or external corner	300 mm
G – Above adjacent ground or balcony level	300 mm
H – From a surface facing the terminal	2000 mm
I – From a terminal facing the terminal	2000 mm
* – From opening (Door/Window) in carport into dwelling	Not recommended
K – Vertically from a terminal on the same wall	1500 mm
L – Horizontally form a terminal on the same wall	300 mm
M – Adjacent to opening	300 mm
N – Above roof level (to base of terminal)	300 mm
P – From adjacent wall to flue	300 mm
Q – From internal corner to flue	400 mm
* – Below eaves or balcony (Vertical flue)	Not Recommended
S – From facing terminal	2000

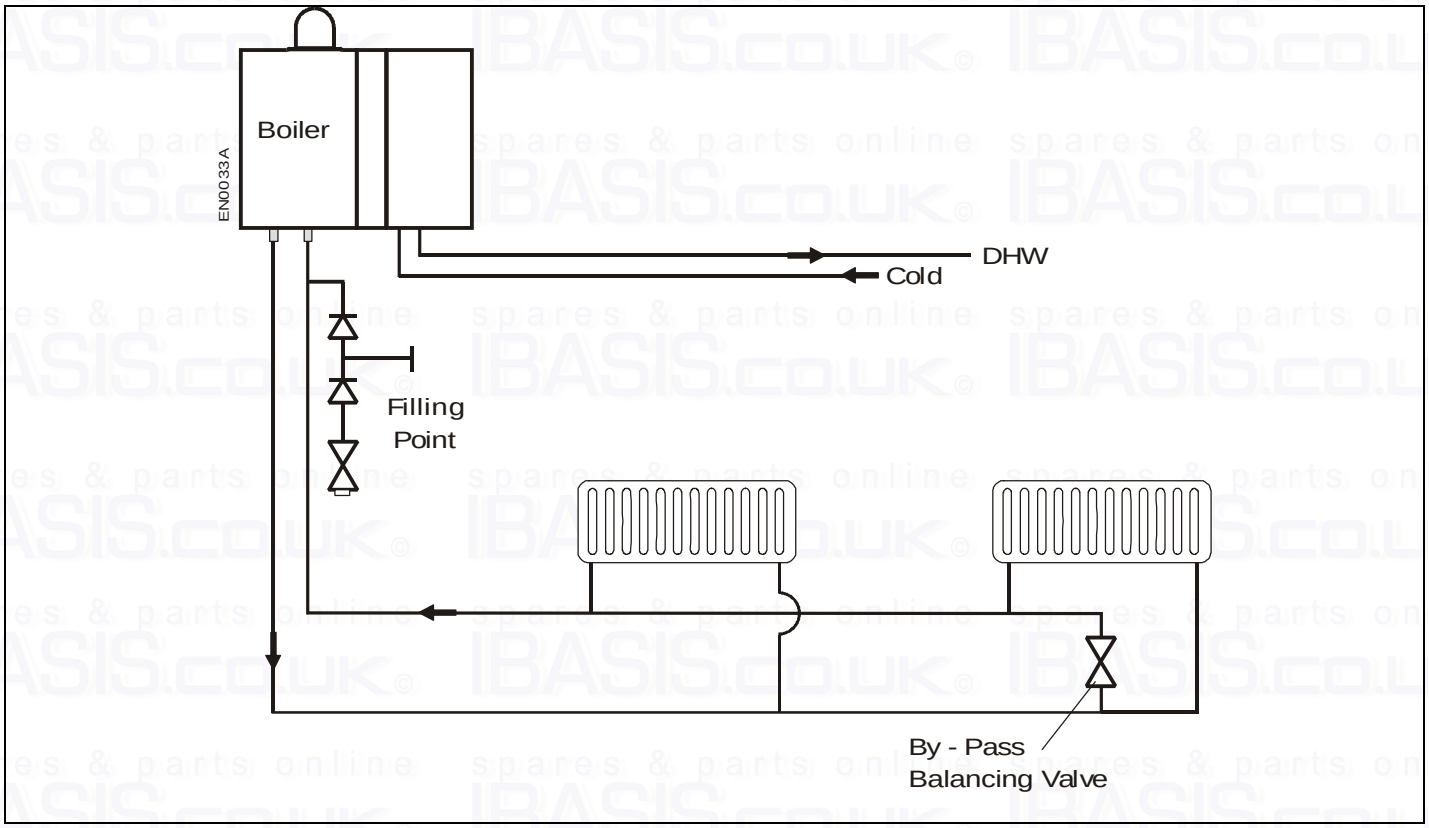

The System

The Envoy Flowsure and Flowsure+ have an aluminium alloy heat exchanger, therefore all systems need to be thoroughly cleansed and the correct treatment added to the system water.

The only system additives recommended by Potterton Myson Ltd. are FERNOX-COPAL or GRACE DEARBORN - SENTINEL X 100 and should be used in accordance with the manufacturers instructions. This will include use of the appropriate system cleanser.

To ensure sufficient pump head is available to overcome system resistance, a system differential of 14° should be allowed for.

Where all radiators may be controlled by thermostatic radiator valves a by-pass should be fitted as far away from the boiler as possible.

Drain off taps should be fitted in the pipework close to the boiler and at all low points of the system.

Note: Although the system can be emptied using the drain off taps installed in the pipework around the system, to empty the boiler it is necessary to remove the drain off cap positioned within the boiler case.

Installation

The installation must comply with the requirements of BS 6798: 1987 and BS 5449: Pt 1. The British Gas publication "British Gas Specification for Domestic Wet Central Heating Systems" should also be consulted.

The following components are incorporated within the appliance.

a) Circulating pump.
b) Diverter valve.
c) Pressure Relief valve with a non-adjustable pre-set lift pressure of 3 bar (45 psi).
d) Pressure gauge covering the range 0-4 bar (0-60 psi).
e) 13.5 litre expansion vessel with initial charge pressure of 1.0 bar (14 psi).

The domestic hot water system must be in accordance

with the relevant recommendations of BS 5546. Copper tubing to BS 2871:1 is recommended for water carrying pipework and MUST be used for pipework carrying potable water. All capillary joints in the D.H.W pipework must be joined with a lead free solder.

Ancillary pipework, not forming part of the useful heating surface, should be lagged to prevent heat loss and any possible freezing, particularly where pipes run through roof spaces and ventilated under-floor spaces.

The expansion vessel on this appliance is suitable for central heating systems up to 135 litres. For systems greater than this, an additional expansion vessel will be required.

Mains Water Feed: Central Heating

A connection must be incorporated into the central heating system to facilitate filling. There must be no direct connection to the mains water supply, even through a non-return valve, without the approval of the Local Water Authority.

Permissible Methods of Filling

(1) Direct Method (Fig. 5)

A detachable flexible hose is connected to a stop valve fitted to an outlet on the service main. The other end of the hose is connected to a second stop valve and a double check valve. The double check valve is fitted to an inlet connection on the central heating return pipe under the appliance. The hose should be disconnected after filling. Where the mains pressure is excessive a pressure reducing valve could be used to make filling easier. The following fittings shall form a permanent part of the system and shall be fitted in the order stated.

a) A stop valve complying with the requirements of BS 1010 Part 2, (the temporary hose from the draw off tap shall be connected to this fitting).

b) Double check valve of an accepted type.

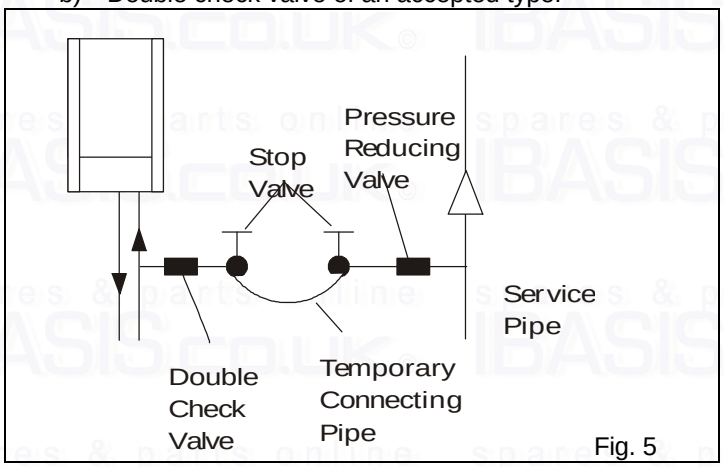

Fig. 5

(2) Booster Pump Method

The system may be filled through a self contained unit comprising a cistern, pressure booster pump and if necessary, an automatic pressure-reducing valve or flow restrictor.

The pressure booster pump must be capable of pressurising the system to a minimum of 1.0 bar (14 p.s.i.) measured at the appliance.

The cistern should be supplied through a temporary connection from a service pipe or cold water distributing pipe. The unit may remain permanently connected to the heating system to provide limited water make-up.

Provisions for make up water

Provision should be made for replacing water loss from the system by re-pressurisation of the system. See section on Methods of Filling.

Reference should be made to British Gas Publications "Material and Installation Specifications for Domestic Central Heating and Hot Water".

Note: The pre-charge pressure of the expansion vessel is set at 1 bar, therefore, the cold fill pressure should be 1 bar.

Installation to an Existing Central Heating System

The boilers are designed to operate on a sealed system only, therefore if the existing system is of the open type it will have to be modified to comply with BS 6798.

Before installing a new boiler to an existing system flush out the old system with a recommended descaling / flushing agent at least twice.

Also check pipework and renew any corroded pipework or fittings. Valve glands must be re-packed or replaced wherever necessary and any defective controls replaced.

Central Heating Range Rate

For most installations the boiler will automatically adjust the central heating output to match your heating system requirement.

Pump

When set on maximum the circulating pump fitted within the appliance should be capable of satisfying most system requirements. Fig. 6 indicates the amount of pump head available for the system. The boiler resistance is already taken into account in this curve.

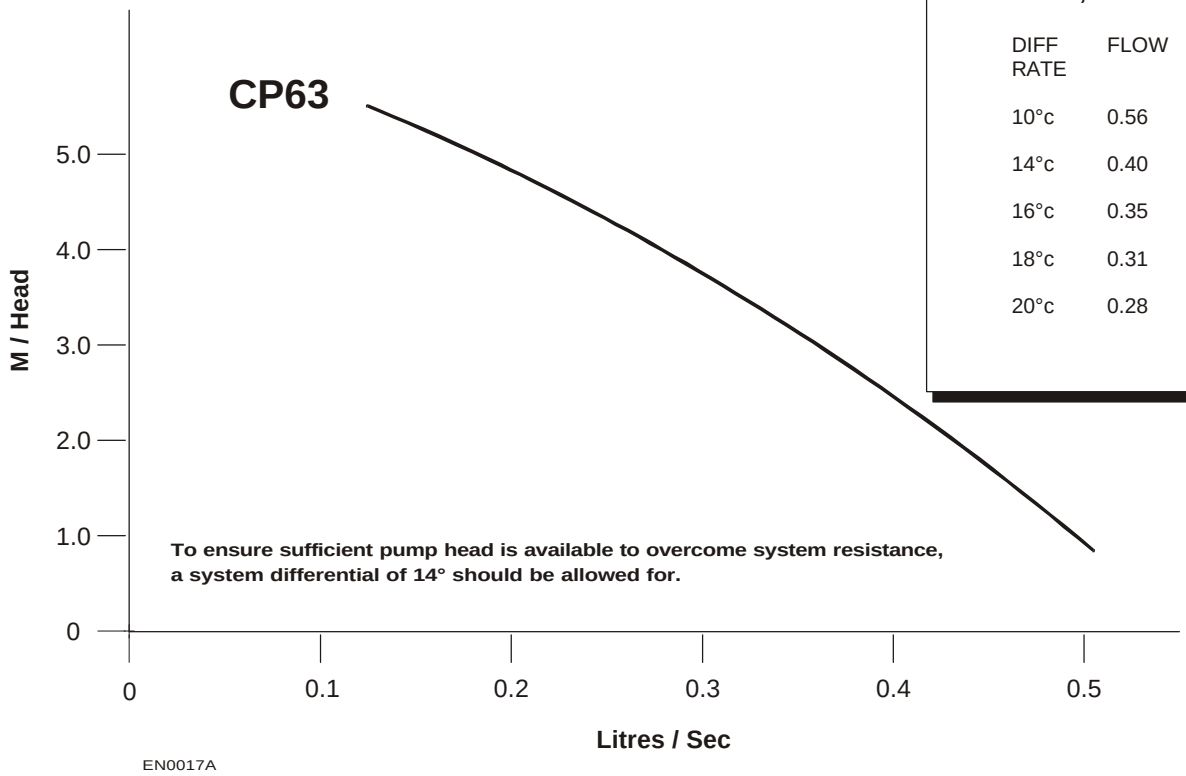

80,000

DIFF RATE	FLOW
10°c	0.56
14°c	0.40
16°c	0.35
18°c	0.31
20°c	0.28

Domestic Hot Water - 20 Litre Tank

The 20 litre tank is a primary store which is designed to be kept heated to meet instantaneous hot water demands. It is a compact unit designed to supply instant hot water at a flow rate of approximately 6.5 litres/min at a 50°C rise.

Domestic hot water always takes priority over central heating.

If domestic hot water is drawn off while the central heating is operating the boiler will automatically transfer the boiler output to the domestic hot water supply.

The tank is provided with all the necessary equipment to ensure correct operation, except when a water meter and/or water softener have been fitted in the system. In such cases, an external secondary mini expansion vessel (Part No. 430029) will need to be fitted on the mains inlet to the tank.

Domestic Hot Water - 50 Litre Tank

The 50 litre tank is a secondary store which is designed to be kept heated to meet instantaneous hot water demands that require intermittently higher flow rates.

At a flow rate of approximately 12 litres/min, hot water will be delivered for around 4 minutes at a 50°C rise reducing thereafter. The tank will fully recover after a few minutes to again deliver 12 litres/min at a 50°C rise.

Domestic hot water always takes priority over central heating.

If domestic hot water is drawn off while the central heating is operating the boiler will automatically transfer the boiler output to the domestic hot water supply.

A secondary water expansion vessel is supplied with the tank and must be connected to the appropriate tapping on the controls assembly.

Important

No valves should be fitted between the expansion vessel and the storage cylinder.

DHW Store Temperature both tanks

Water is stored in the tank at approximately 73C. To ensure a safe delivery temperature a thermostatic mixing valve is fitted in the hot water outlet and should be adjusted to produce a hot water delivery temperature of 60C.

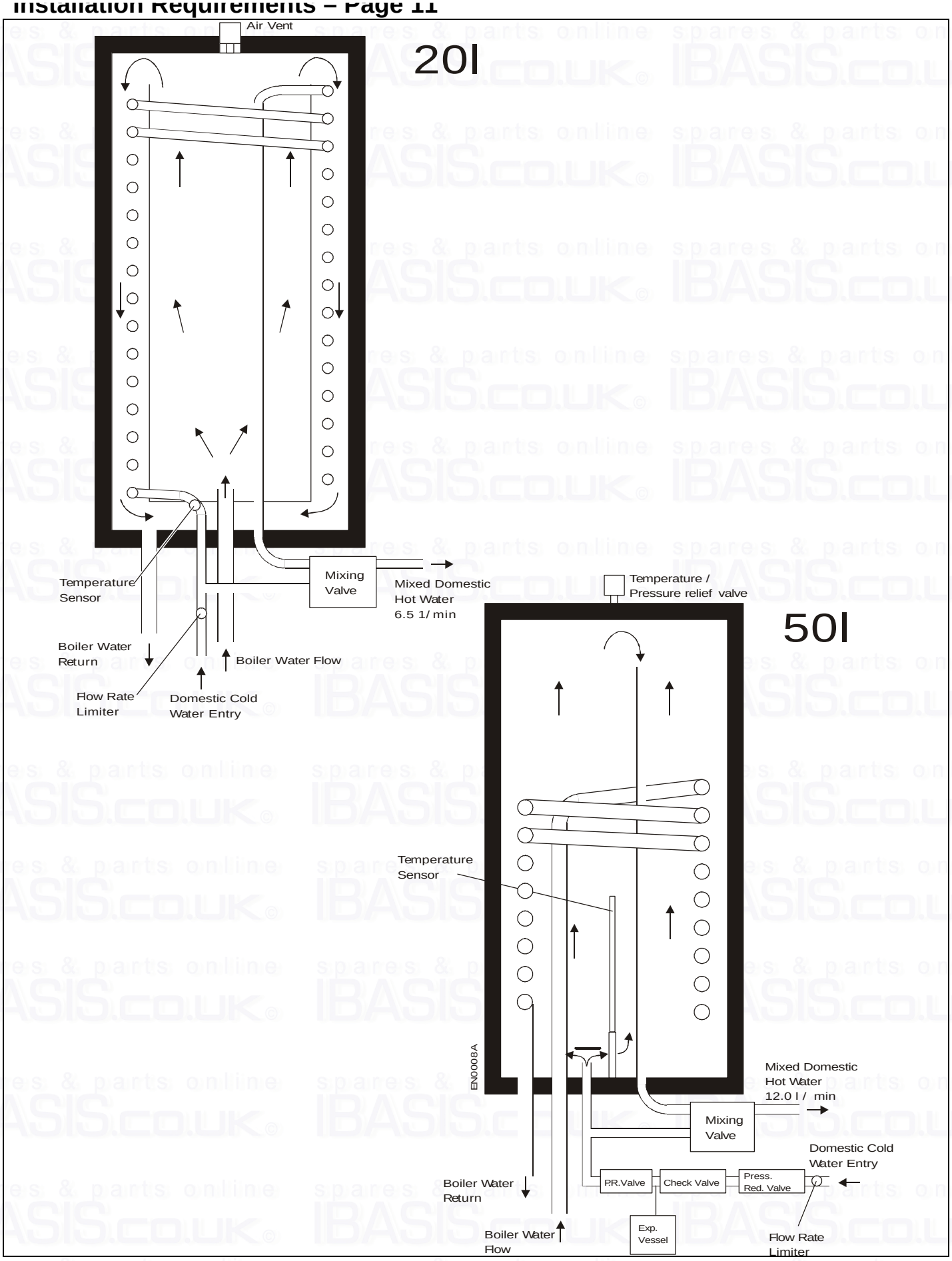

spares & parts online IBASIS.CO.UK

It is the law that gas appliances are installed and serviced by a competent person as stated in the Gas Safety (Installation & Use) Regulations 1994.

Electrical test work should be carried out by a competent person in accordance with IEE wiring regulations.

The boiler and its associated equipment will arrive on site in 4 cartons. The contents will be as follows:-

Carton 1:- Boiler Pack	Carton 2:- Tank Pack	Carton 3:- Flue Pack	Carton 4:- Frame
Boiler	Tank	Flue System	Boiler Mounting Frame
Outer Casing Assembly	Tank Frame	Flue Installation Instructions	Template
Accessory Pack	Controls Assembly (50 litre Only)		Boiler Connections Kit
	Tundish (50 litre Only)		Screw Pack
	Secondary Expansion Vessel & Support Brackets (50 litre Only)		Tank Piping Jig
			Literature Pack

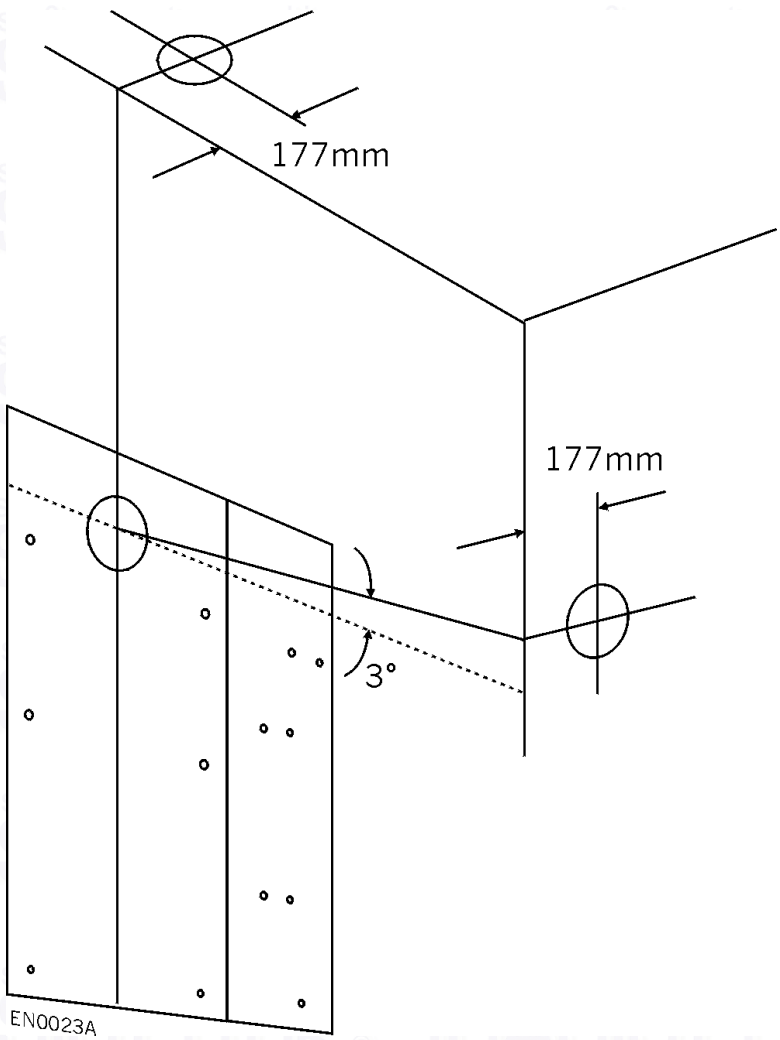

Fig.8

Installation

Taking due account of the terminal position and making allowance for all horizontal flues to rise at an angle of 3° (52mm per metre) from the boiler, place the template in proposed boiler position. Ensure the template is level and mark the ten fixing hole positions. If rear fluing mark flue outlet hole through template.

When side or vertical fluing extend flue outlet centre line on the template horizontally or vertically as appropriate and mark flue outlet hole on adjacent surface as illustrated. Vertical flues require a 105mm diameter hole unless extension kits are used when the hole size will need to be increased to 125mm to allow joining clamps to pass through.

Horizontal flues require a hole diameter of 125mm for all wall thicknesses providing the hole rises through the wall at an angle of 3°.

Where a horizontal hole is produced using a core drill the hole diameter will need to be increased for thicker walls as shown in the following table.

Hole Diameter	Maximum Wall Thickness
125mm	230mm
150mm	720mm
175mm	1000mm

Remove the template and drill the holes using a 7mm drill. Carefully cut the flue outlet hole through the wall or ceiling allowing for any horizontal flue to rise at an angle of 3° throughout its length.

The boiler mounting frame pack includes a tank piping jig for both 20 and 50 litre vessels. Discard as appropriate.

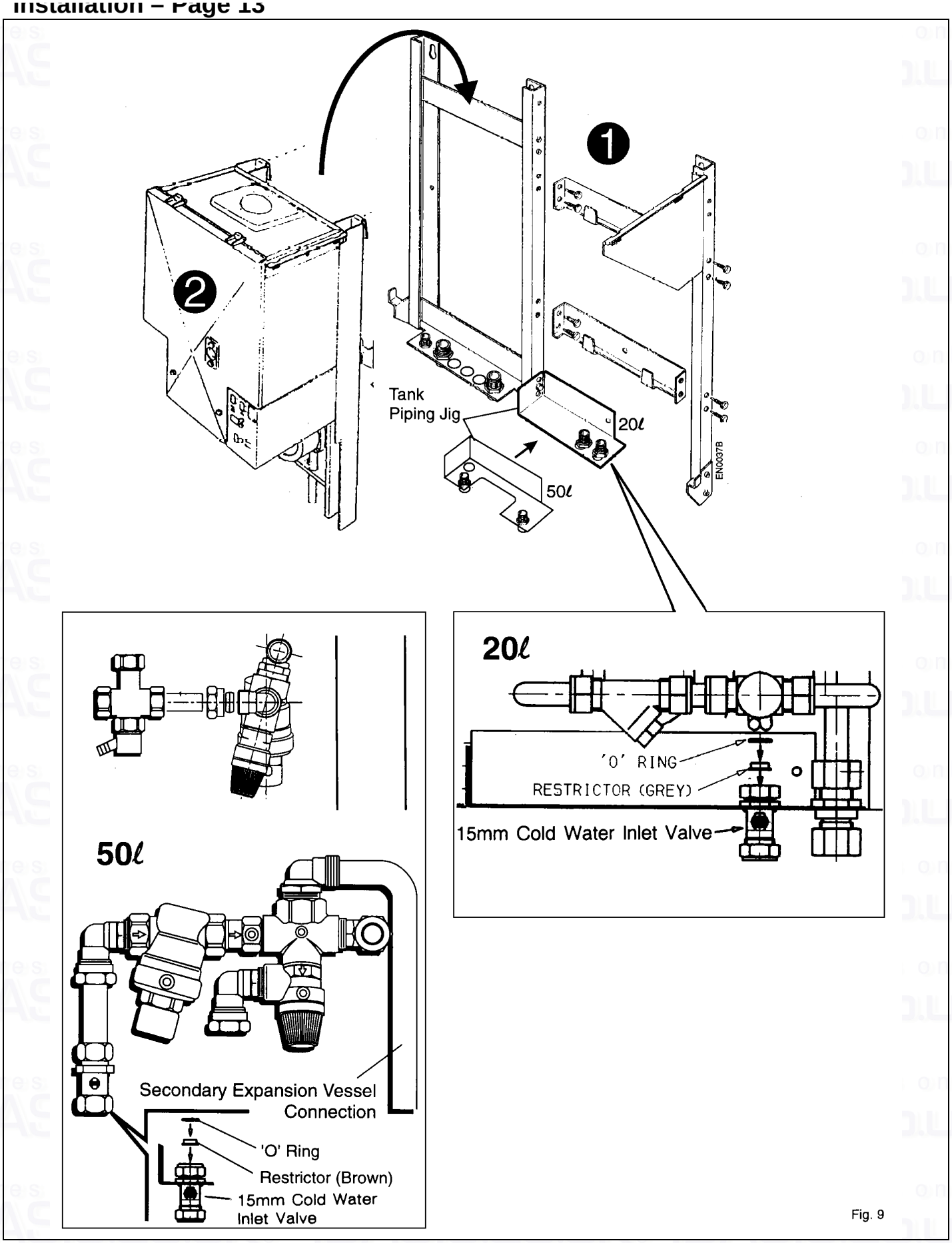
1
2
Tank
Piping Jig
20ℓ
50ℓ
EN0037B
20ℓ
'O' RING
RESTRICTOR (GREY)
15mm Cold Water Inlet Valve
50ℓ
Secondary Expansion Vessel
Connection
'O' Ring
Restrictor (Brown)
15mm Cold Water
Inlet Valve

Fig. 9

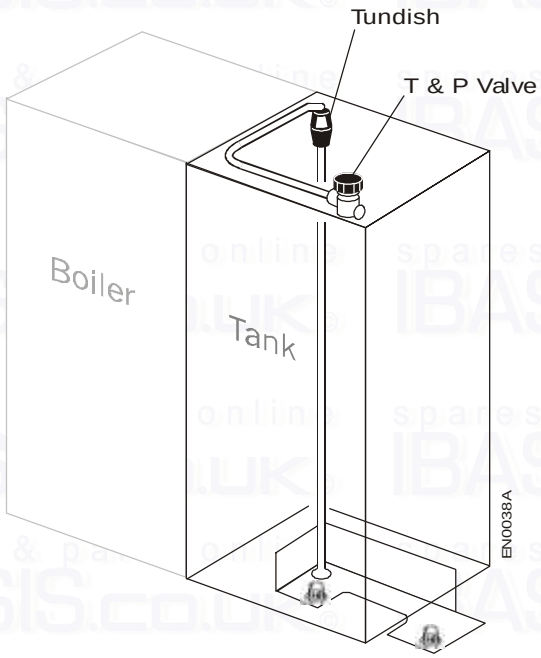

Assemble the tank piping jig to the boiler mounting frame as illustrated.

Using 10 off wall plugs and screws from accessory pack attach the boiler mounting frame and tank piping jig to the wall ensuring that they are level.

Attach the tank mounting frame assembly to the wall and boiler mounting frame as shown.

From the accessory pack, connect the fittings to the base of the mounting frames as shown - see Fig. 2 for guidance.

Slide the nuts and olives from the fittings onto the boiler pipes and temporarily tape them clear of the pipe ends.

Lift and hang the boiler onto the mounting frame ensuring the pipework at the base of the boiler locates into the fittings in the base of the mounting frame. Drop the expansion vessel forward and using the sealing washers provided connect the flexible tank hoses to the boiler as shown (See Fig. 2), it may be necessary to remove the vessel.

Connect the plastic condensate drain pipe to the mounting frame.

Connect system pipework to the base of the mounting frame as shown. Use a compression fitting for the pressure relief pipe from the boiler.

Connect the gas supply to the base of the mounting frame as shown.

Important

Ensure the flow limiter is fitted as shown in the outlet connection of the cold water inlet valve - See Fig. 9.

50 litre vessel Only: Connect the controls assembly to the base of the tank.

50 litre vessel Only: Connect the remote secondary expansion vessel to the connection on the controls assembly. Support brackets are supplied.

Tundish and T & P Valve: The tundish must be left visible to the consumer once installed and must not come into contact with any electrical components. Connect the temperature and pressure relief valve to the tundish using the pipe supplied. Attach a ¾ to 22mm compression fitting to the tundish and run a relief pipe down the back of the mounting frame as shown.

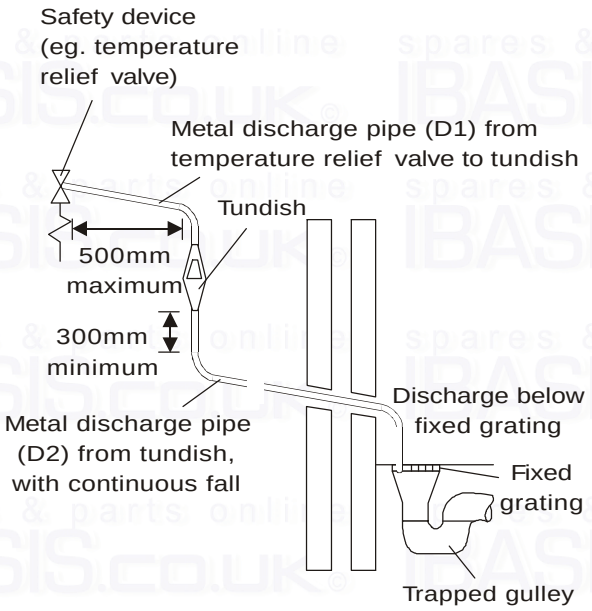

Sizing of Copper Discharge Pipe

Min size of discharge pipe (D1)	Min size of discharge pipe (D2) from tundish	Max. resistance allowed, expressed as a length of straight pipe no elbows orbends	Resistance created by each elbow or bend
15mm	22mm	up to 9m	0.8m
	28mm	up to 18m	1.0m
	35mm	up to 27m	1.4m

Pressure Relief Valve: The Flowsure has one P.R.V. fitted within the boiler pre-set at 3 bar. The Flowsure+ has two P.R.V's fitted, one within the boiler pre-set at 3 bar and one within the tank controls pre-set at 6 bar.

Install a pressure relief valve discharge pipe to the boiler and tank valves, not less than 15 mm diameter and connect to the pressure relief outlet connection using a 15mm Compression fitting. The pipe run should be as short as possible, run continuously downwards and discharge to the outside of the building, where possible over a drain. The pipe end should be directed towards the wall. (see Fig. 9C) The discharge point must be such that it will not be hazardous to occupants or cause damage to external electrical components or wiring.

IT MUST NOT DISCHARGE ABOVE AN ENTRANCE, OR WINDOW, OR ANY TYPE OF PUBLIC ACCESS. THE INSTALLER MUST CONSIDER THAT THE OVERFLOW COULD DISCHARGE BOILING WATER.

Electrical Connections

The boiler and all external control circuit wiring must be supplied from the same isolating switch or plug and socket.

The boiler terminal block which is situated in the control box is not designed to accept wiring from all the on-site controls therefore the installer will need to incorporate an external junction box.

Open the control box by removing the two M4 securing screws and lowering the access door as illustrated.

Electrical Wiring

Route a four core cable from the external junction box through the cable clamp in the underside rear of the control box and connect to boiler terminal block as follows.

Permanent live to terminal marked L
Neutral to terminal marked N
Earth to terminal marked
Switched live from external controls to terminal marked SwL

If there are no external controls fitted connect SwL terminal to permanent live in the junction box.

Note: The electrical mains supply must be fused at 3A and the connection must be made to the boiler terminals in such a way that should the lead disengage from the cable clamp, the current carrying conductors become taut before the earth conductor.

Close the control box and replace the two M4 securing screws.

Plug tank sensor cable into the mating connector on the short cable coming from the bottom of the control box.

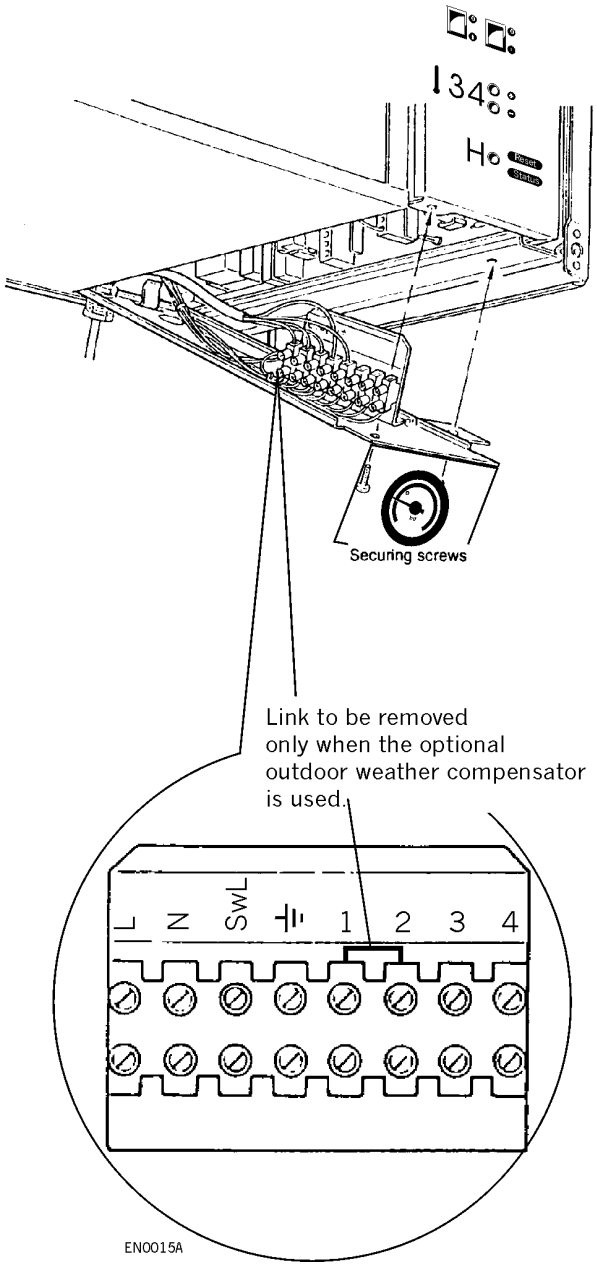

All Systems

Note: The system can be filled using a sealed system filler pump with a break tank or by any other method approved by the Local Water Authority. Refer to 'THE SYSTEM' section Page 9 in these instructions, also BS.6798 1987.

Flush out the system thoroughly with cold water. Fill and vent the system until the pressure gauge registers 1.5 bar (21.5 lbf/in²). Examine for leaks. Raise the pressure until the safety valve lifts. This should occur within ±0.3 bar of the preset lift pressure of 3 bar. Release water to attain the correct cold fill pressure.

The whole of the gas installation including the meter should be inspected and tested for soundness and purged in accordance with the recommendations of BS.6891.

Electrical testwork should be carried out by a competent person in accordance with the IEE Wiring Regulations.

Conduct a preliminary electrical test by checking: for short circuits, fuse failure, incorrect polarity, earth continuity and resistance to earth. If a fault has occurred on the appliance, the fault finding procedure should be followed. See Page 30.

Fit the functional case door into position by lifting it onto the top hinge brackets and secure it with the lower two fixing screws.

First Lighting

WARNING: Before lighting the boiler ensure that the functional case door HAS BEEN CORRECTLY FITTED and that the sealing strip fitted to the door is forming a tight seal with the main boiler casing.

Before proceeding to light the boiler, check that the external electricity supply to the boiler is switched off and that the CH & DHW control switches are in the 'Off' position.

Turn on the gas service cock.

Ensure that the boiler and radiator isolating valves are open.

Switch ON the main electricity supply (character 0 will be displayed).

Note: The boiler is protected by an automatic frost protection device, therefore if the water temperature within the boiler is below 5°C or 10°C in the tank the boiler will fire until the return temperature reaches 40°C or the tank temperature reaches 15°C.

Ensure the electronic timer if fitted, is in an 'ON' period (refer to the time control literature).

Ensure that the room thermostat if fitted is set to a high temperature.

Switch both the CH & DHW switches to the On position.

The symbol in the Status/Function display will change from 0 to H or h.

The fan switches on and sets to maximum RPM to give a pre-purge.

The hot surface igniter turns on and reaches a preset temperature.

The gas valve is opened.

If the control fails to detect flame in the first 3 seconds, the boiler will stop and a new ignition cycle started. After 3 ignition attempts the control will go to lockout. The Status/Function display will show an L and the Flow Temperature & settings display will show 01. Refer to fault finding section on Page 30.

If ignition is successful the flow temperature is measured by the control for the first twenty seconds to ensure that there is a greater than 3°C rise in the flow temperature. (If unsuccessful, the boiler will go to lockout - see fault finding).

When the temperature rise has been detected, the controls will adjust the boiler output depending on whether the call for heat is from the domestic hot water or central heating. When the set temperature is reached the controls will close the gas valve, allow the fan to run for a short time then set the pump overrun (if required).

It should be noted that the boiler control continuously monitors the temperature rise across the heat exchanger. Therefore, if the system is not correctly vented, air passing through the pump may lead to boiler shut down with the characters 02 being displayed in the Flow Temperature & Settings display and the character L shown in the Status/Function. If this occurs thoroughly vent the system and press the reset button.

Burner Pressure

This appliance is fitted with a Gas/Air ratio control valve. This gas valve ensures that the correct amount of gas is delivered to the burner to match the available air supply under all operating conditions.

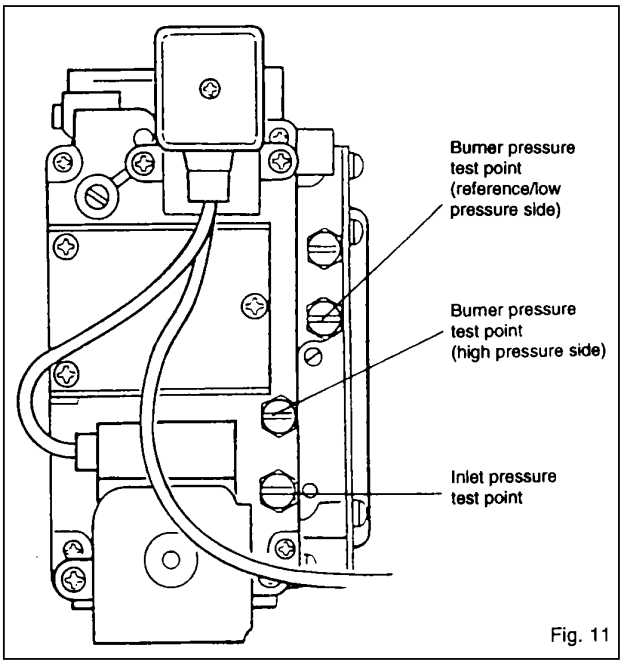

Fig. 11

THE BURNER PRESSURE AND GAS RATE HAVE BEEN PRECISELY SET AND CHECKED DURING MANUFACTURE AND NO ATTEMPT SHOULD BE MADE TO ADJUST IT.

To check the correct operation of the gas valve follow the instructions below carefully.

a. A good indication of correct operation of the boiler will be obtained by measuring the gas rate at the gas meter.

1. Run the appliance for at least 10 minutes.

Ensure the boiler is NOT modulating by operating in the DHW mode with hot water taps fully open.

2. With all other gas appliances turned off measure the gas rate at the meter for a period of at least 5 minutes. Check that the measured rate is within ±5% of the rate stated on the data plate.

b. To measure the burner pressure.

1. Turn off the gas service cock. Fit a pressure gauge to the gas inlet pressure test point on the gas control valve. Connect a differential pressure gauge or 'U' tube manometer between the burner pressure gauge test point (high pressure side) and the reference pressure test point (low pressure side) on the gas valve (see Fig. 11).

2. Turn on the gas service cock and run the appliance for at least 10 minutes. Check that the gas inlet pressure is between 19-20 mbar.

3. Check that the differential burner pressure is within ±1.0 mbar of that stated on the data plate.

4. Turn off the gas service cock and remove the pressure gauge and replace the pressure test point sealing screws on the gas valve.

Should the gas rate or differential burner pressure fall outside the specified range run the boiler for a further 10 mins and carry out a re-check, if after re-checking either the gas rate or the burner pressure falls outside the tolerance specified, Potterton Myson Service Department should be called as specialist equipment is required to enable adjustment to be made.

Relight the boiler and reheat the system to maximum. Check for water leaks, turn the boiler off, drain the system whilst hot.

Remove functional case door and ensure there are no condensate leaks from around the boiler or the condensate drainage system.

Refit functional case door ensuring a good seal.

Refill the system and add the correct concentration of FERNOX COPAL or GRACE DEARBORN SENTINEL X100 water treatment.

Adjust to the correct cold fill pressure (1 bar).

If a by-pass circuit is fitted the by-pass valve should be adjusted with the boiler operating under minimum load conditions to maintain sufficient water flow through the boiler to ensure that the overheat device does not operate under normal operating conditions.

Pump Overrun Timer

Will keep the pump running for approximately 5 minutes after burner shutdown to dissipate heat left within the boiler. The times are adjustable and can be set via the control panel.

Overheat Protection Device

The overheat protection device is pre-set and no adjustment is possible. Manual resetting is required if an overheat condition occurs. The reset button is situated in the front of the boiler control box.

Boiler Display & Controls

For full details of the boiler display and controls see Page 19.

Other Boiler Controls

All boiler mounted controls are designed so that if any fault should occur they will fail safe. No further setting or checking is necessary.

Final Assembly

Remove the three M5 pozi head screws from the right hand side of the boiler as shown, Secure the centre case support bracket using the three screws previously removed. Attach casing side panels onto the boiler as illustrated (Fig. 12) ensuring that the three lugs on each panel are correctly located. Slide in the bottom panel and push fully home. Engage hooks on the top rear of the front panel into the slot in the top front corner of each side panel. Lower the front panel to engage brass studs into the retaining clips, press fully home to lock panel into position.

External Controls

Check that any other external control connected in the system, such as timers and thermostats, control the boiler as required.

User's Instructions

A User's Guide is provided with this boiler but the householder must have the operation of the boiler and system explained by the installer. The householder must also be advised of the importance of annual servicing and of the precautions necessary to prevent damage to the system and building, in the event of the system remaining out of commission in frost conditions.

Information must also be passed to the customer on the type of corrosion inhibitor that has been added to the system and of the need to maintain the correct concentration levels as recommended by the manufacturer.

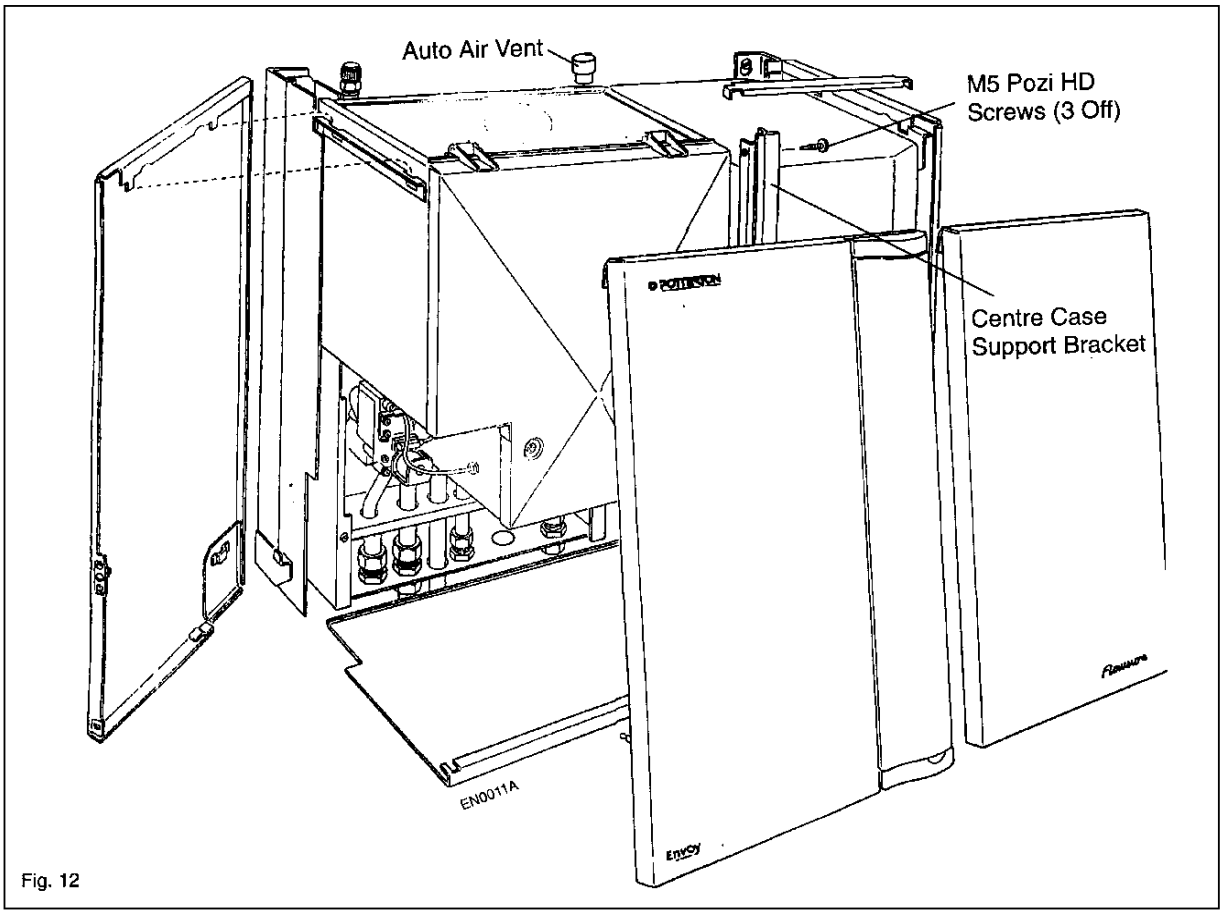

Fig. 12

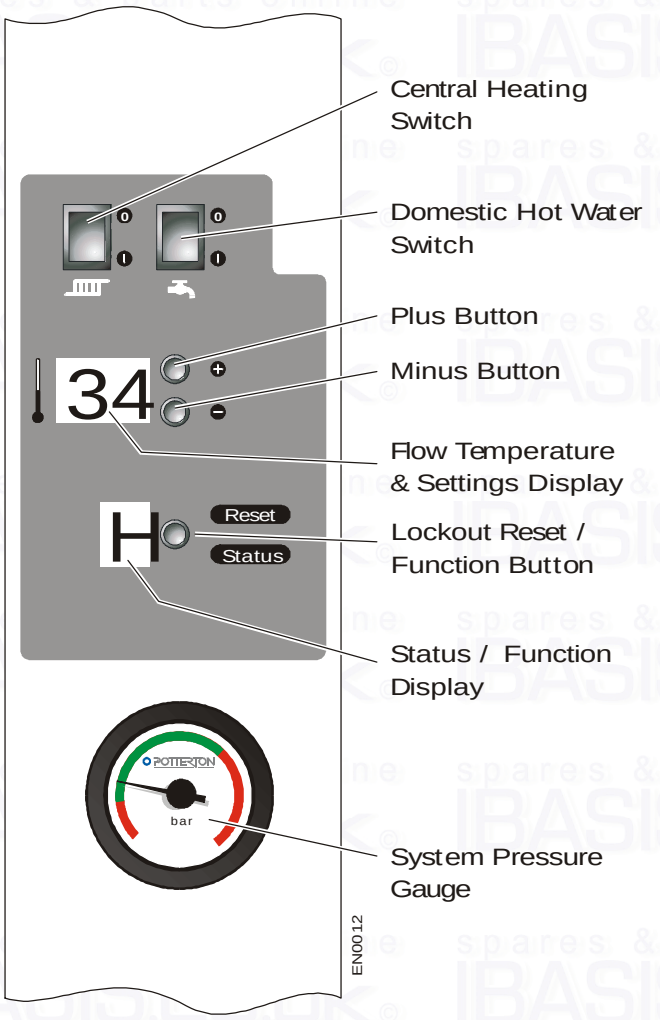

Boiler Controls

All boiler mounted user controls are situated in the front of the boiler control box behind the hinged door.

Central Heating Switch: In the 'On' position the central heating (CH) will be on unless connected to a timer when it will operate on the timed settings.

Domestic Hot Water Switch: In the 'On' position, the domestic hot water (DHW) will be available on demand. Domestic hot water always takes priority over central heating.

Flow Temperature & Settings Display: This shows the boiler flow temperature under normal operation and error condition numbers if a fault should occur.

Status Function Display: This shows the boiler operating condition under normal operation and an error condition letter if a fault should occur.

Under normal conditions of operation the following characters appear:-

Display not illuminated. All power off.

0 **Stand-by**: This is displayed when the CH & DHW switches are in the 'Off' position. Also shown when both switches are in the 'On' position but there is no call for heat.

The boiler flow temperature will be shown on the Flow Temperature & Settings Display.

H **Central Heating**: This is displayed with a flashing dot when the CH switch is in the 'On' position (and there is a call for heat from the time control, if fitted). When the burner lights the dot will stop flashing.

The boiler flow temperature will be shown on the Flow Temperature & Settings Display.

Temperature Adjustment: The boiler thermostat setting can be adjusted as follows when in central heating mode:-

1. Press the Lockout Reset/Function Button once and the H will flash. The Flow Temperature & Setting Display will change to show the boiler thermostat setting.

   The setting can now be changed in 1°C steps (between 50°C & 85°C) by pressing the Plus or Minus buttons.

2. Press the Lockout Reset/Function Button once and the flashing H will change to a flashing C this is the installer adjustment mode entry point (and the outdoor weather compensator slope adjustment point if fitted).

3. Outdoor Weather Compensator Slope Adjustment: (Optional Extra)

   As well as the flashing C a number between 10 and 30 (default is 20) will be shown on the Flow Temperature & Settings Display. This feature is used to optimize the boiler output (flow temperature) to the heating demand (outside temperature) and takes into consideration such factors as the standard of insulation (heat loss) of the building, output of the heating system and the level of comfort required.

Note: This feature only works when an outdoor weather compensator is connected to the boiler, the display will remain the same with or without sensor.

4. Press the Lockout Reset/Function Button once and the flashing C will change to an H.

Note: If you hold the Lockout Reset/Function Button for more than 5 seconds you will enter the installer adjustment mode settings. If this happens, leave the controls alone and they will reset after a few minutes.

Further information on installer adjustment is provided below.

c **Pump Overrun:** This is displayed on completion of a heating period when the residual heat from the boiler is being dissipated.

h **Hot Water:** This is displayed when the storage tank water is being heated.

Reset Button

Pressing the reset button will allow the control to be reset and the boiler restarted should a lockout condition have occurred. (The character L is shown on the status/function display and a number i.e. 01 shown on the temperature/settings display)

To Shut Off

Set both the CH & DHW switches to 'Off'.

Installer Adjustment

The following functions allow you (the installer) to configure the boiler to a particular site or to gain information about the boiler and system including the most recent faults that may have occurred. In most cases the default settings will have been used to ensure the most efficient operation and should not be changed unless necessary. To enter the adjustment mode proceed as follows:-

From 0 **Stand-by:** Press the Lockout Reset/Function Button twice and the display will change to a flashing C

From H **Central Heating:** Press the Lockout Reset/Function Button once and the flashing H will change to a flashing C.

To enter the installer settings mode depress the Lockout/Reset function button and hold down for around 5 seconds. The Status/Function display will change to h

Important:
If a setting is changed when in this mode the Lockout Reset/Function Button must be pressed through the following sequence to store the change in memory.

Settings: Press the reset button after each selection to move to the next function.

h **Storage Tank:** The 50 litre is set at 50 and the 20 litre tank is set at 20. The 20 litre may also use 00 in areas where water hardness is a problem. Whilst in this mode press the + or - buttons to select appropriate tank size as indicated in the Flow Temperature & settings Display.

t **Minimum Flow Temp:** See Outdoor Weather Compensator.

d **Reference Temp:** See Outdoor Weather Compensator - if fitted.

n **Used only to change from the default setting of ..:** This allows the Setback Function to operate and means that the boiler will run at times when the secondary controls are satisfied due to the Outdoor Weather Compensator controlling the boiler.

r **Return Water Temp:** Actual reading (°C) shown in Flow Temperature & Settings Display.

c **Pump Overrun:** Settings available are 1, 5, 10, 15, 20, 25, 30, 35, 40, minutes and CO (continuous). Whilst in this mode press the + or - buttons to select appropriate timings as indicated in the Flow Temperature & settings Display.

. **Flame Signal:** When this is shown, the flame signal will be shown as a percentage between 00 & 99 in the Temperature & Settings Display.

L **Last Lockout:** This is when a lockout has occurred and the control has been reset. *For more information see the Fault Finding section.*

b **Last Blocking Error:** This is when a blocking error has occurred and then cleared. *For more information see the Fault Finding section.*

G **Maximum Fan Speed: This** is normally set at 99 which is equivalent to 4680 RPM. *For more information see the Fault Finding section.*

J **Minimum Fan Speed:** This is normally set at 40 which is equivalent to 2920 RPM. *For more information see the Fault Finding section.*

F **Fan Speed Offset:** This allows for an offset in the fan speed. *For more information see the Fault Finding section.*

U **Control Status:** From the information shown on the Flow Temperature & Settings Display it is possible to determine the function the control is performing at any one time. *For more information see the Fault Finding section.*

Display returns to User Mode at this point.

Menu of Settings and Information available to the Installer

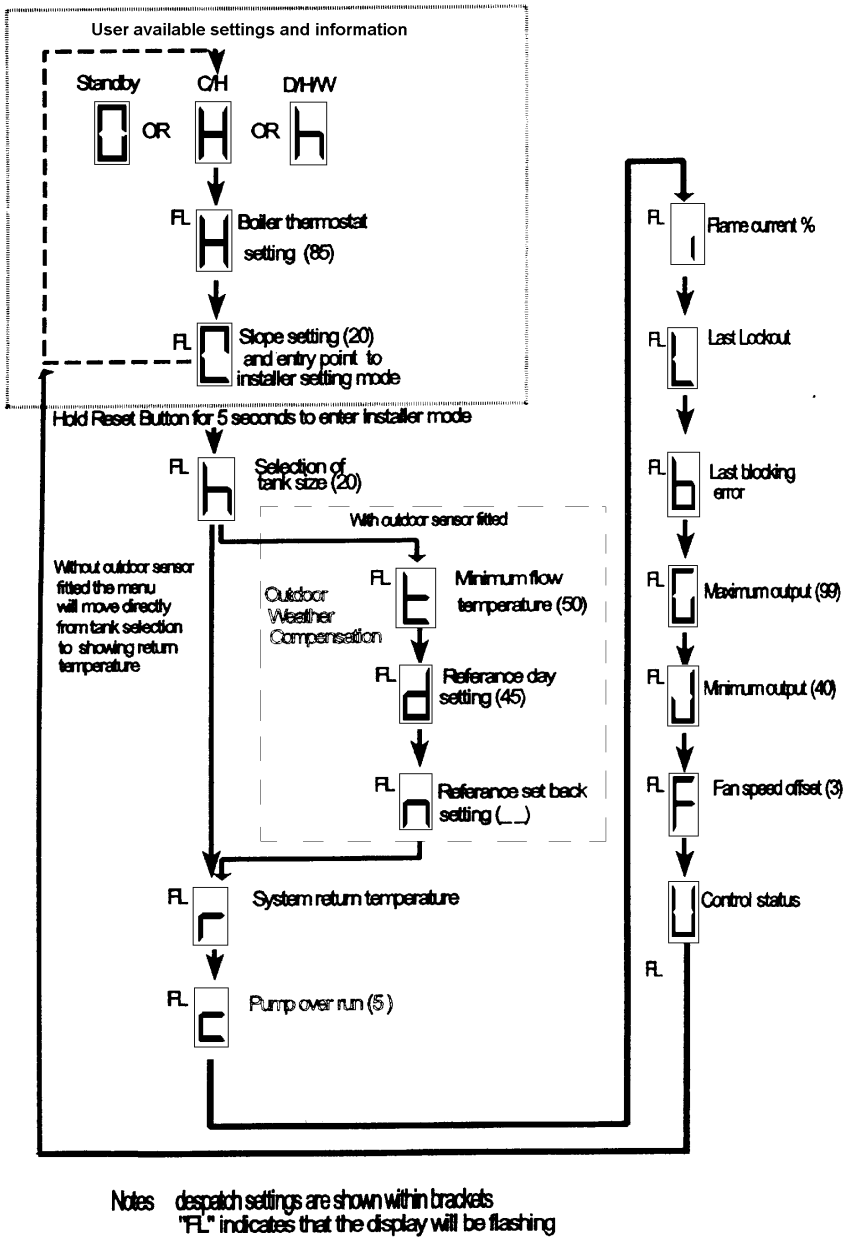

Notes despatch settings are shown within brackets
"FL" indicates that the display will be flashing

Outdoor Weather Compensator - Optional Extra

The information taken from the sensor is used in conjunction with some of the software settings within the controls and used to calculate the required boiler output/system temperature to match the heat load of the dwelling. This is achieved by reducing the flow temperature setpoint as the outdoor temperature rises. Full information is provided with the outdoor weather compensator.

Settings

- **Slope Setting**: This is used to vary the sensitivity of outdoor temperature compensation, the higher the setting the greater the change in flow temperature setpoint for a one degree change in outside temperature.
- **Min. Flow Temp**: Setting: Used to fix the lowest setpoint achievable by the outdoor weather compensation. Available settings are 50°C to 60°C (default 50°C).
- **Ref. Temp. Setting**: This is an offset to increase or decrease the boiler flow setpoint with reference to outside temp.
- **Temp. Set Back**: The boiler is supplied with this function 'disabled' with default setting displayed. When 'enabled' the outdoor weather compensator will continue to control the boiler at times when all other secondary controls are satisfied if outdoor weather conditions require it.

It is the law that all gas appliances are installed and serviced by a competent person as stated in Gas Safety (Installation and Use) Regulations 1994.

For Health and Safety Information see page 5.

Electrical test work and servicing should be carried out by a competent person in accordance with the I.E.E. Wiring Regulations.

Regular skilled servicing and cleaning of the appliance is essential to ensure continued safe and efficient operation.

The frequency of cleaning will depend upon the particular installation conditions, and the use to which the appliance is put, but in general, once a year should be adequate.

The boiler DATA PLATE and WIRING DIAGRAM are located on the front of the boiler functional casing.

The boiler code number which is on the code badge located on the boiler top panel see FIG.2 should always be quoted when ordering spares or requesting information.

Before commencing the servicing of the boiler it is advisable to carry out a pre-check on the boiler to establish that it is functioning correctly.

a) Set the boiler running to check its operation.

Note: If the boiler fails to start or does not follow the sequence above then refer to fault finding section on Page 29.

WARNING

Before the start of any servicing or replacement of parts ensure that you have:

a) Switched off at the external electrical supply by removing the plug from the wall socket or by switching off the appliance at the external isolating switch.

b) Isolated the gas supply at the boiler service cock.

Preparation of the Boiler

Preparation for servicing should be carried out in the following manner.

1) Remove decorative outer casing doors by pulling the bottom of the door from its fixing clips and pushing upwards until it is clear of its top fixing.

2) Remove bottom decorative panel.

3) Remove functional case door by undoing the two lower securing screws and lift door off the two upper hinge brackets. FIG. 14.

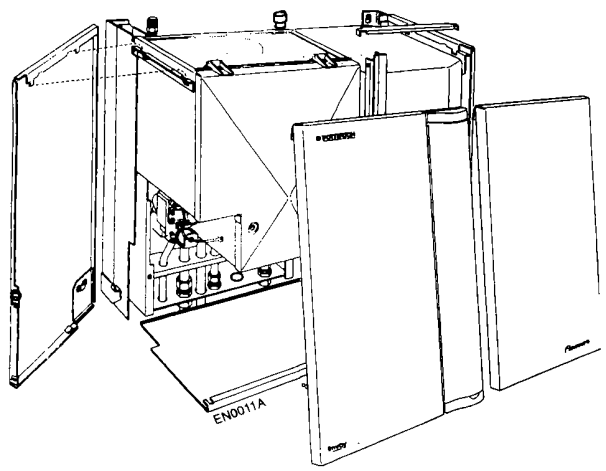

Fig. 14

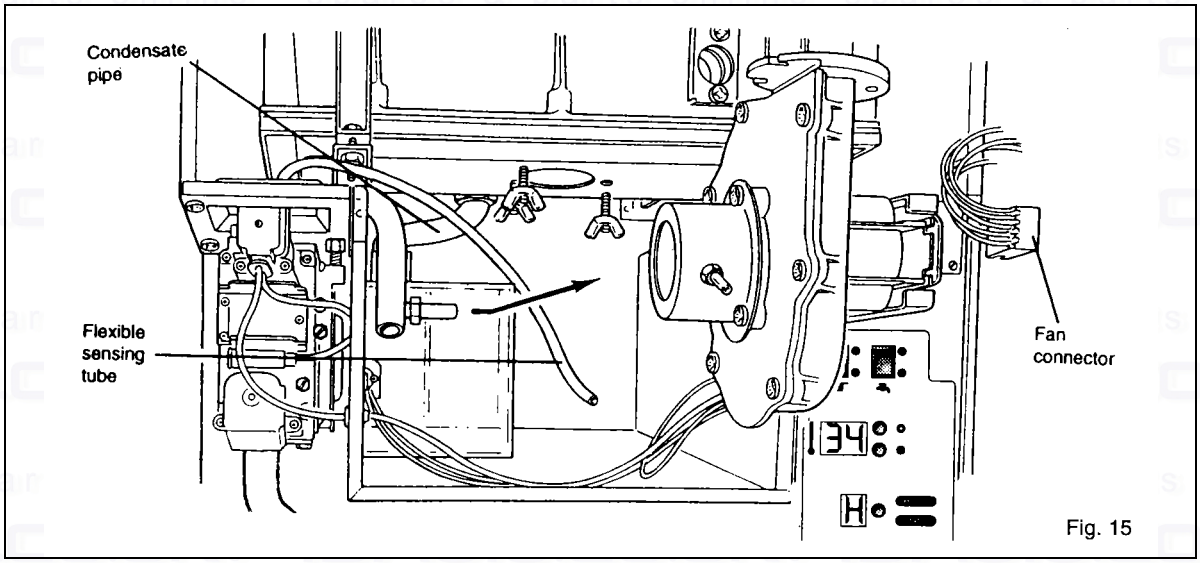

Fig. 15

Removing Fan

1) Disconnect electrical connection from fan motor. FIG. 15.

2) Disconnect flexible sensing tube from the fan inlet housing.

3) Remove fan by slackening two wing screws on left hand side and removing the M5 wing screw on the right hand side of the fan.

4) Slide fan to the right then forward and remove from boiler.

Removing Combustion Chamber & Flue Hood

5) Disconnect flexible condensate pipe from the rear of the combustion chamber/sump casting.

6) Disconnect inline connectors for the hot surface igniter and the flame sensor on the right hand side of the combustion chamber. FIG. 16.

Note the hot surface igniter is a fragile component and requires extreme care when handling.

7) Remove two M6 screws retaining clamps around flue hood and combustion chamber.

8) Remove the top clamps from their anchor points at the rear of the casing.

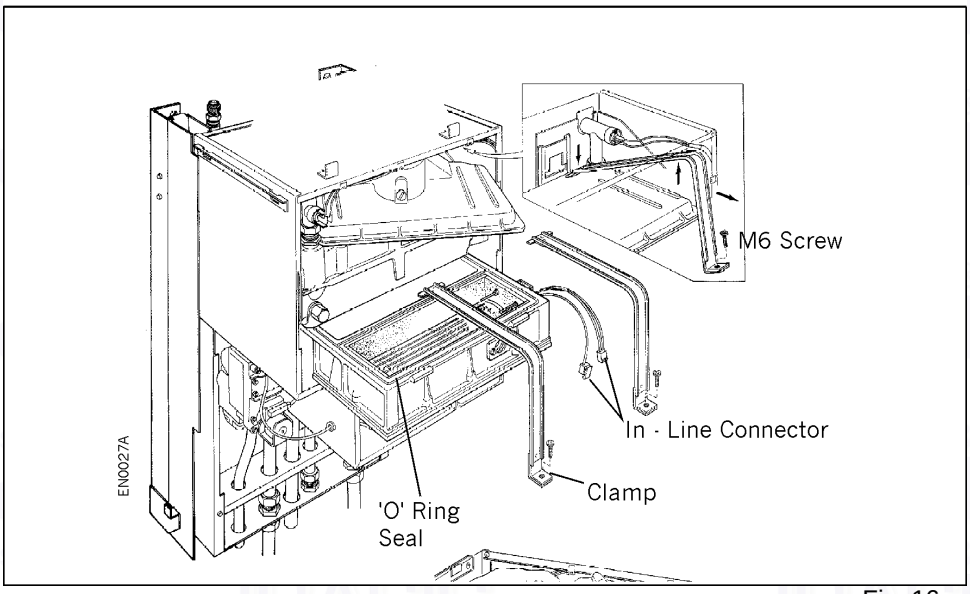

Fig. 16

Removing Combustion Chamber and Flue Hood - Continued.

9) Fold back flue sealing gaiter between the flue hood and flue elbow. FIG.17.

10) Carefully remove flue hood by moving the right hand side of the flue hood forward and gently guide the hood around the flow tapping on the heat exchanger.

11) Pull combustion chamber forward until it is clear of the boiler casing.

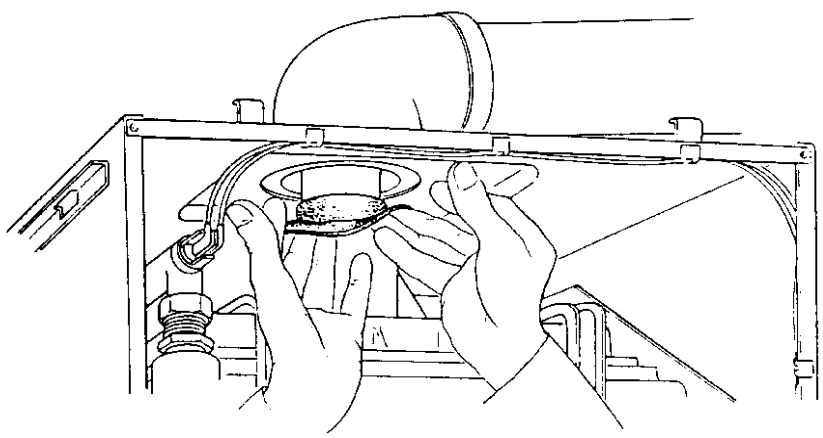

Fig. 17

Examination of Flue Ways and Cleaning

1) Place a sheet of clean paper over the inlet of the condense syphon and the gas assembly. It is particularly important that debris is prevented from entering the short upward facing tube from the gas control valve.

2) Cleaning of the heat exchanger must be carried out using a Potterton scraper Part No. 907736.

3) Working from below and above the heat exchanger remove all deposits from between the fins.

4) Examine top and bottom sealing face of the heat exchanger for deep scratches and remove any debris with a soft brush to provide a smooth flat sealing face.

5) Examine Syphon for evidence of leakage or build up of debris.

Note: Place a catch tray beneath the syphon cleaning eye plug and remove plug this should remove any debris which has collected in the pipe section. If necessary the syphon should be removed and flushed with tap water. See replacement of parts for further information.

Re-assembly of Boiler

6) Before reassembling combustion chamber and flue hood to the boiler examine for the following:-

- The 'O' ring seals for damage
- The insulation in the combustion chamber. Note if there is any visible deterioration of this material it MUST be replaced
- Damage to the hot surface igniter
- Damage to the surface of the burner
- Damage to sight glass
- Build up of debris in the condensate sump (This may be removed with a soft brush)

If any of the above components require changing see section 'Replacement of Parts' for further information.

7) Replacement of components is the reverse of removal.

Note: great care should be taken not to damage the flue hood and combustion chamber seals during replacement of these assemblies.

8) When refitting retaining clamps ensure that they are located correctly in the guides on both the flue hood and combustion chamber.

9) Ensure that the combustion chamber seats correctly onto the heat exchanger, that the screws are fully tightened and that the clamps fix the combustion chamber and flue hood securely.

10) Ensure connection from sump to syphon is made before refitting fan.

11) Ensure that the flue sealing gaiter between the flue hood and elbow is correctly positioned untwisted and forms a good seal to both components.

12) Relight the boiler as described by following the lighting procedure in the commissioning section of these instructions.

Replacement of Parts

Before replacing any component carry out pre-check detailed at the beginning of the Service section and then refer to fault finding section of these instructions.

WARNING
Before the start of any servicing or replacement of parts ensure that you have:

a) Switched off at the external electrical supply by removing the plug from the wall socket or by switching off the appliance at the external isolating switch.

b) Isolated the gas supply at the boiler service cock.

If the combustion chamber has been removed follow procedure in Service section 'Re-assembly of boiler'

1) Fan

a) Follow procedure in 'Preparation for servicing' at the beginning of the servicing section.

b) Replacement of fan is the reverse of removal.

2) Hot Surface Igniter
WARNING This component is fragile and requires careful handling.

a) Remove combustion chamber as described in **'Servicing Boiler'**.

b) The igniter assembly is retained by two M5 pozi drive screws. Remove screws and carefully remove old igniter, if the igniter has become damaged, invert the combustion chamber and shake gently to allow damaged segments to be removed from the chamber. See Fig. 18.

c) Replacement of the igniter is the reverse of removal ensure that a new sealing gasket is always fitted and that a good seal is made between the igniter and combustion chamber.

3) Flame Sensor

a) Remove combustion chamber as described in **'Servicing Boiler'**.

b) Remove screw retaining sensor and withdraw from the combustion chamber. See Fig. 18.

c) Replacement of the sensor is the reverse of removal, ensure new gasket is always fitted.

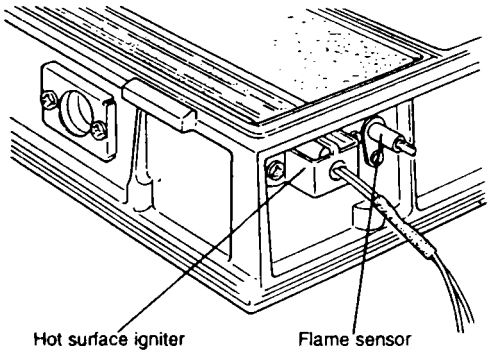

Fig. 18

4) Insulation
Note: all four insulation pads must be replaced.

a) Remove combustion chamber as described in **'Servicing Boiler'**. See Fig. 16.

b) Remove hot surface igniter, flame sensor. Fig. 18 and burner Fig. 19.

c) Remove old insulation.

d) Replace front pad first ensuring that bevelled edge is uppermost and fits into the chamber correctly.

e) Fit rear pad and use end insulation to retain rear pad.

4) Insulation (Continued)

f) Carefully replace burner.

g) Refit hot surface igniter and flame sensor.
WARNING This component is fragile and requires careful handling.

h) Replacement is the reverse of removal.

5) Burner

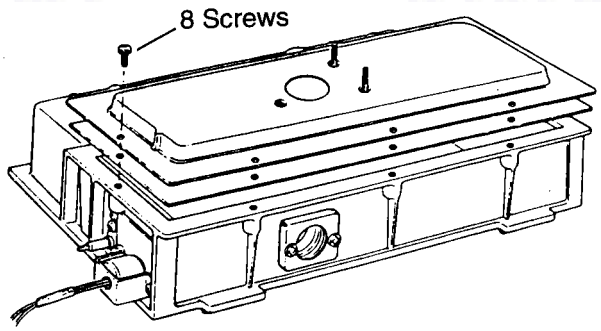

Fig. 19

a) Remove combustion chamber as described in '**Servicing Boiler**'.

b) Remove 8 M5 screws retaining burner to the combustion chamber. Fig. 19.

c) Remove burner from the combustion chamber.

d) Ensure the burner is fitted with the gasket supplied with it.

e) Taking care not to damage the burner surface, install new burner into combustion and secure with 8 screws.

f) Re-assemble as described in section **'Servicing Boiler'**.

6) Syphon

a) Remove decorative and functional doors as described in **'Servicing Boiler'**.

b) Remove fan see **'Servicing Boiler'**.

c) Disconnect flexible condensate pipe from the rear of the combustion chamber/sump casting. Fig. 15.

d) Disconnect syphon from its wastepipe. See FIG. 9.

e) Undo nut securing Syphon to the bottom of the boiler casing.

f) Replacement of the Syphon is the reverse of removal.

*See **Servicing Instructions** for re-assembly of boiler.*

7) Flue Hood/Combustion Chamber Seals.

a) Remove combustion chamber/fluehood as described in '**Servicing Boiler'** See Fig.16.

b) Remove old seal.

c) Clean groove using a soft brush or dry lint free cloth.

d) Ensure new seal is correct (flue hood and combustion chamber require different seals).

e) Lay seal over groove and gently push into the groove until fully home.

*See **Servicing Instructions** for re-assembly of boiler.*

8) Injector

a) Remove decorative and functional doors as described in **'Servicing Boiler'**.

b) Remove fan see 'Servicing Boiler'.

c) Remove injector by unscrewing from gas supply pipe.

d) Replacement is the reverse of removal.

9) Gas Valve Assembly

a) Remove decorative and functional doors as described in **'Servicing Boiler'**.

b) Remove fan as described in **'Servicing Boiler'**.

c) Disconnect electrical supply lead at the gas valve by removing the two retaining screws and unplug.

d) Remove 4 M5 screws securing gas control valve to boiler service cock.

e) Remove 6 M5 screws retaining gas assembly mounting plate 4 M5 on the left underside of the plate and two within the casing. Remove M5 screw attaching the valve to its mounting bracket.

f) Slide gas assembly forward and remove from boiler.

g) Remove flexible tube from assembly and fit to new gas assembly.

h) Replacement is the reverse of removal ensuring a new gasket is fitted between casing and mounting plate and the 'O' ring seal is correctly positioned between the gas control valve and the boiler service cock.

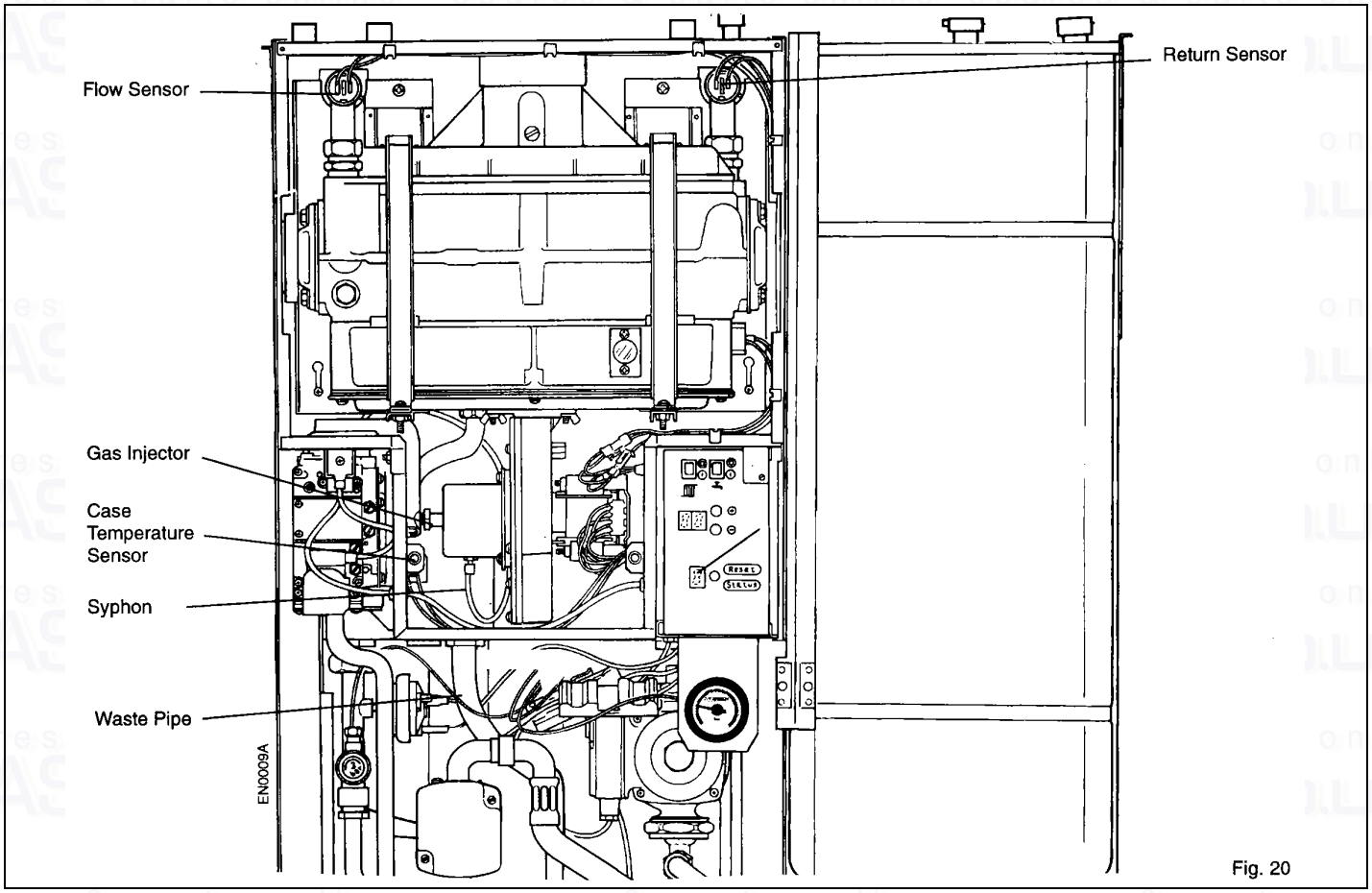

Fig. 20

10) Sight Glass (combustion chamber or case door).

Note: Care should be taken when handling and disposing of broken glass.

a) Remove decorative casing door if changing functional door sight glass or both decorative and functional doors if changing combustion chamber sight glass, as described in 'Servicing Boiler'.

b) Remove two screws retaining sight glass assembly and carefully remove from the combustion chamber or door.

c) Replacement is the reverse of removal ensuring a new gasket is fitted either side of the glass.

11) Water Temperature Sensor (flow and return).

a) Remove decorative and functional doors as described in 'Servicing Boiler'.

b) Disconnect two leads from the sensor and remove it by gently squeezing two protruding plastic lugs and while still squeezing pull from its housing.

c) Replacement is the reverse of removal ensure when fitting new sensor that sensor tip is coated with heat conducting paste and that it is correctly located and firmly home in its housing.

12) Diverter Valve Head.

a) Remove decorative door and base panel as described in 'Servicing Boiler'.

b) Lower the expansion vessel to provide access.

c) Disconnect the diverter valve in-line electrical connector.

d) Remove the two screws securing the diverter valve head to the main body and remove the head.

e) Fit the diverter valve head to the valve body ensuring that the shaft seats correctly. Secure the head in position with the two new screws supplied.

f) Connect the diverter valve in-line electrical connector.

13) Case Temperature Sensor.

a) Remove decorative and functional doors as described in 'Servicing Boiler'.

b) Disconnect two yellow leads from the sensor.

c) Remove fixing screw from mounting bracket.

d) Remove sensor

e) Replacement is the reverse of removal.

14) Boiler Control Board.

IMPORTANT
Before replacing the control board refer to fault finding section of these instructions. The control should only be replaced if the diagnostic display indicates it is faulty.

a) Remove decorative door as described in 'Servicing Boiler'.

b) Remove screw retaining access door on under side of boiler. Fig. 21.

c) Remove screw retaining control front panel and tray. Fig. 21.

d) Gently pull front panel forward removing connectors from the control as they become accessible. Fig. 22.

15) Boiler Control Board Fuses.

a) Remove decorative & functional doors as described in 'Servicing Boiler'.

b) Remove screw retaining access door on under side of boiler. Fig. 21.

c) Remove screw retaining control front panel and tray. Fig. 21.

d) Gently pull front panel forward removing connectors from the control as they become accessible. Fig. 22.

e) Remove old fuse and replace with the correct Potterton component T - 3.15A (Part No. 933005).

f) Replacement is the reverse of removal.

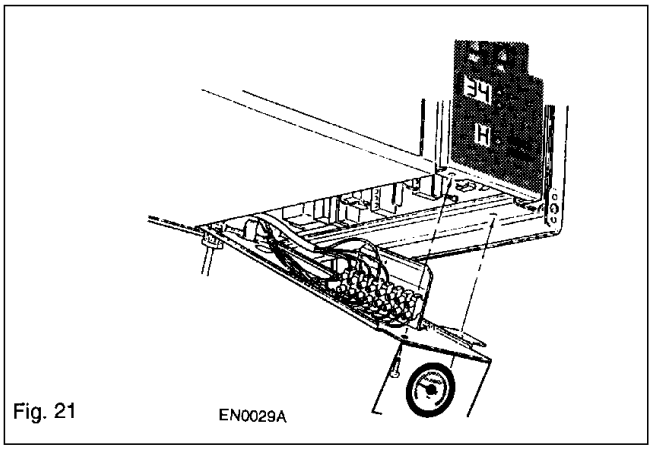

Fig. 21

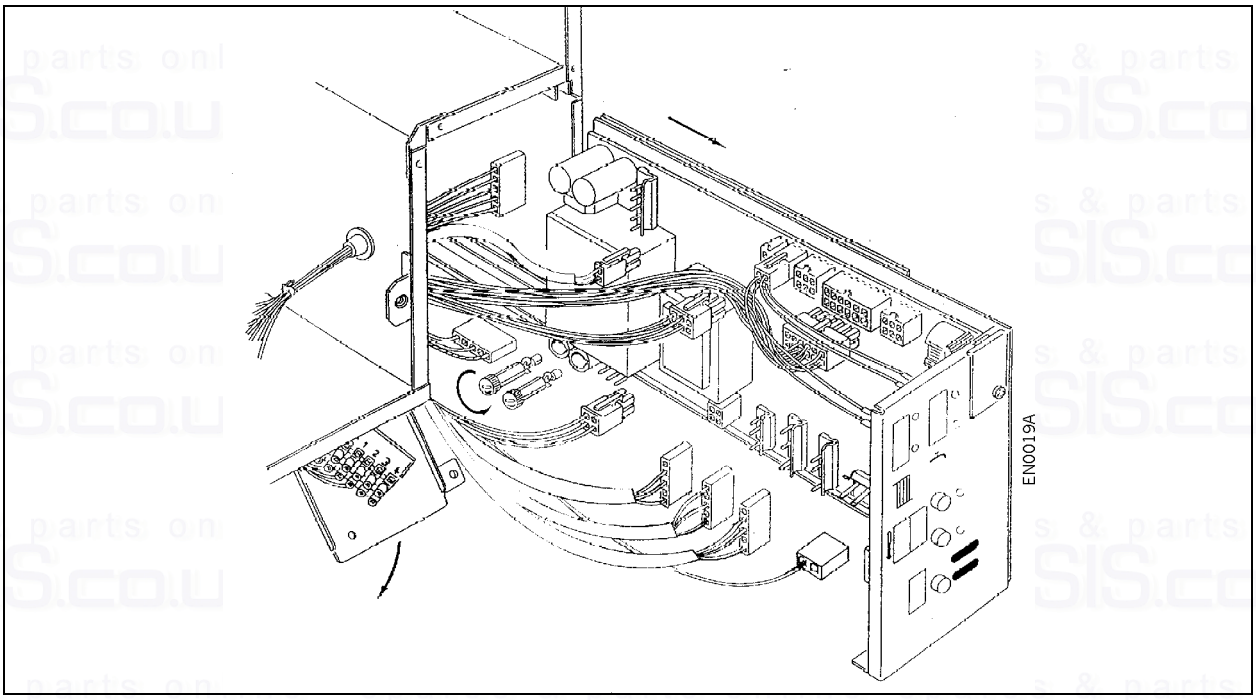

16) Water Components.

Replacement of Pump, Water Pressure Switch, Diverter Valve and Water Pressure Gauge.

a) Remove decorative & functional doors as described in 'Servicing Boiler'.
b) Remove blanking screw and attach a hose to the drain valve on the return pipe isolating valve.
c) Release system pressure by opening the pressure relief valve on the boiler flow pipe.
d) Turn off the isolating cocks on the flow and return pipe connections to the boiler and the boiler will drain.
e) Remove the clamping screw and lower the expansion vessel to provide access to the water components.

Pump:

f) Disconnect the in-line connector on the pump supply cable.
g) Undo the union nuts on the inlet and outlet connections and lift out the pump.
h) Replacement is the reverse of removal. New seals should be used on re-assembly.

Diverter Valve:

f) Disconnect the inline connector on the valve supply cable
g) Disconnect the electrical connectors from the water pressure switch.
h) Disconnect the pressure gauge connection from the pressure relief valve.
j) Disconnect the flexible hose from the top of the diverter valve.
k) Disconnect the CH flow connection at the bracket where it connects with the heat exchanger pipe.
l) Disconnect the CH flow pipe from the isolating cock.
m) Disconnect the nut at the base of the pressure relief valve and swing the pipe out of the way.
n) Carefully lift out the assembly.
p) Replacement is the reverse of removal.

Water Pressure Switch:

f) Disconnect the electrical connectors from terminals 1 & 3 of the switch.
g) Unscrew the switch to remove.
h) Replacement is the reverse of removal. Polarity of the wires is not important.

Water Pressure Gauge:

f) Disconnect the pressure gauge connector from the pressure relief valve.
g) Disconnect the pressure gauge from the bracket under the controls panel and remove the gauge.
h) Replacement is the reverse of removal.

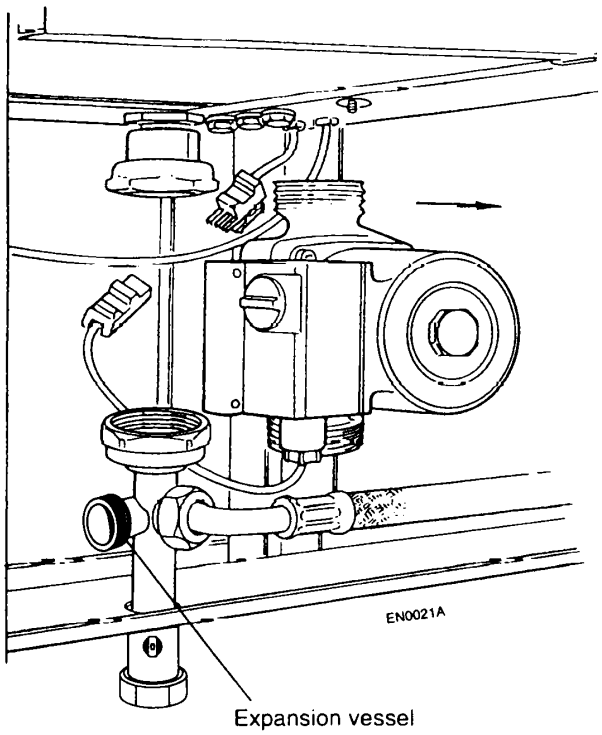

Expansion vessel connection

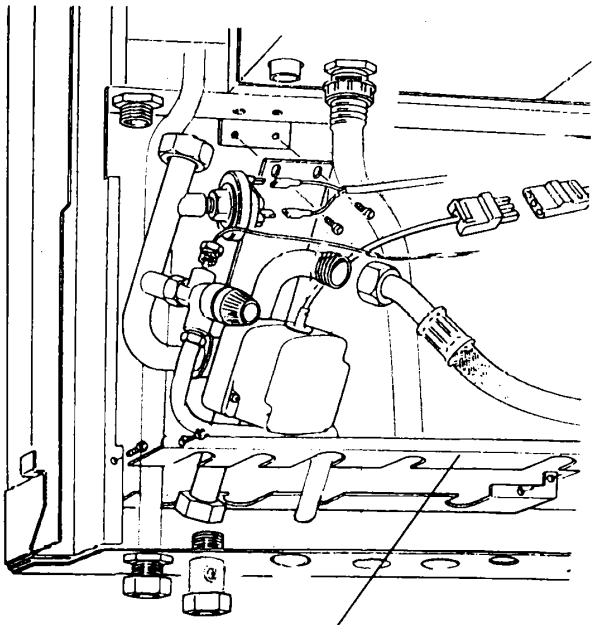

Remove two screws and lift out pipe locating plate.

Fig. 23

Error Codes

Last Lockout: This is when a lockout has occurred and the control has been reset, this event is then stored in the controls memory until another lockout occurs and is reset at which time the display is updated to reflect the new event. The type of lockout is shown in the Flow Temperature & Settings Display.

For more information see the Fault Finding Chart.

Last Blocking Error: This is when a blocking error has occurred and then cleared, this event is then stored in the memory until another blocking error occurs at which time the control updates the display to reflect the new event. The type of Blocking Error is shown in the Flow Temperature and Settings Display.

For more information see the Fault Finding Chart.

Maximum Fan Speed: This is normally set at 99 which is equivalent to 4680 RPM, this reading should not be changed as it affects the maximum heat output of the boiler.

Minimum Fan Speed: This is normally set at 40 which is equivalent to 2920 RPM, this reading should not be changed as it affects the minimum heat input of the boiler and may cause noise below this figure.

Fan Speed Offset: This allows the fan speed to be adjusted in 3 x 60 RPM increments above and below the nominal speed of 4680 RPM - Setting 03 on the Flow Temperature & Settings Display. This has been factory set to ensure that the correct air signal pressure is produced and may have been set anywhere between 00 and 06. Adjustment in the range is achieved by pressing the + or - buttons whilst the F is displayed in the Status/Function Display.

Control Status: From the information below it is possible to determine the function the control is performing at any one time. This is useful when diagnosing faults, as failure to carry out a step may point to a malfunctioning component.

Flow Temperature & Settings Display	Step/ Function	Flow Temperature & Settings Display	Step/ Function
02	Stand-by	09	Fan Overrun
03	Fan Purge	10	Fan Overrun
04	Ignition Pre Checks	11	Pump Overrun - Central Heating
05	Ignition Pre Checks	12	Pump Overrun - Used in Frost Protection
06	Hot Surface Igniter	13	Pump Overrun - Storage Tank
07	Gas On	14	Lockout
08	Burner On	15	Blocking Error

Preliminary Test Diagnostics All boilers are fully tested before leaving the factory therefore if an electrical problem is experienced it is very likely that this is caused by faulty external wiring. If a problem exits, disconnect all site wiring from boiler. Connect a direct fused electrical supply to boiler terminals L, SwL, N & E.
If the boiler now operates correctly the site wiring should be investigated further.

Menu of Settings and Information Available to Installer

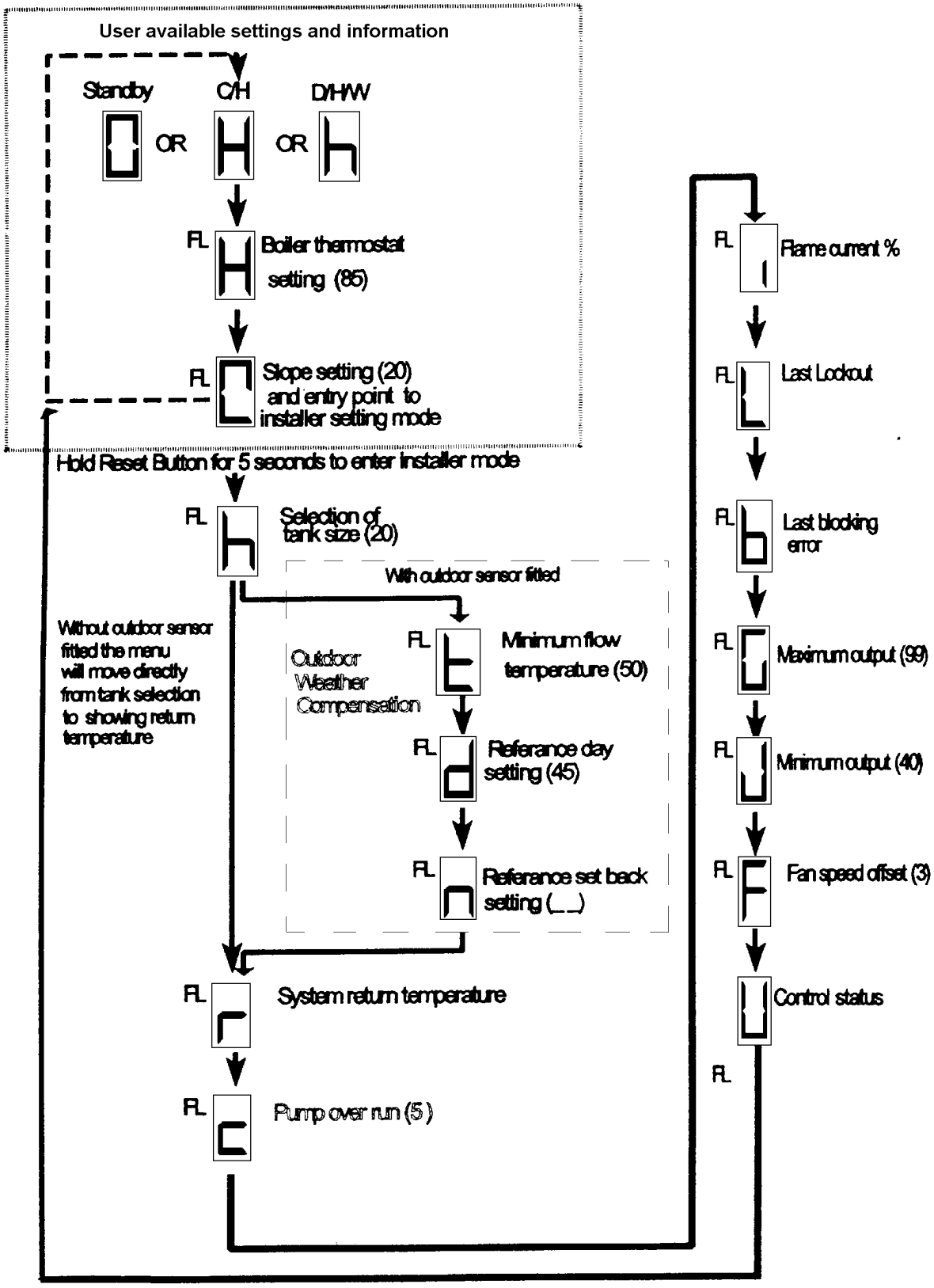

Notes despatch settings are shown within brackets
"FL" indicates that the display will be flashing

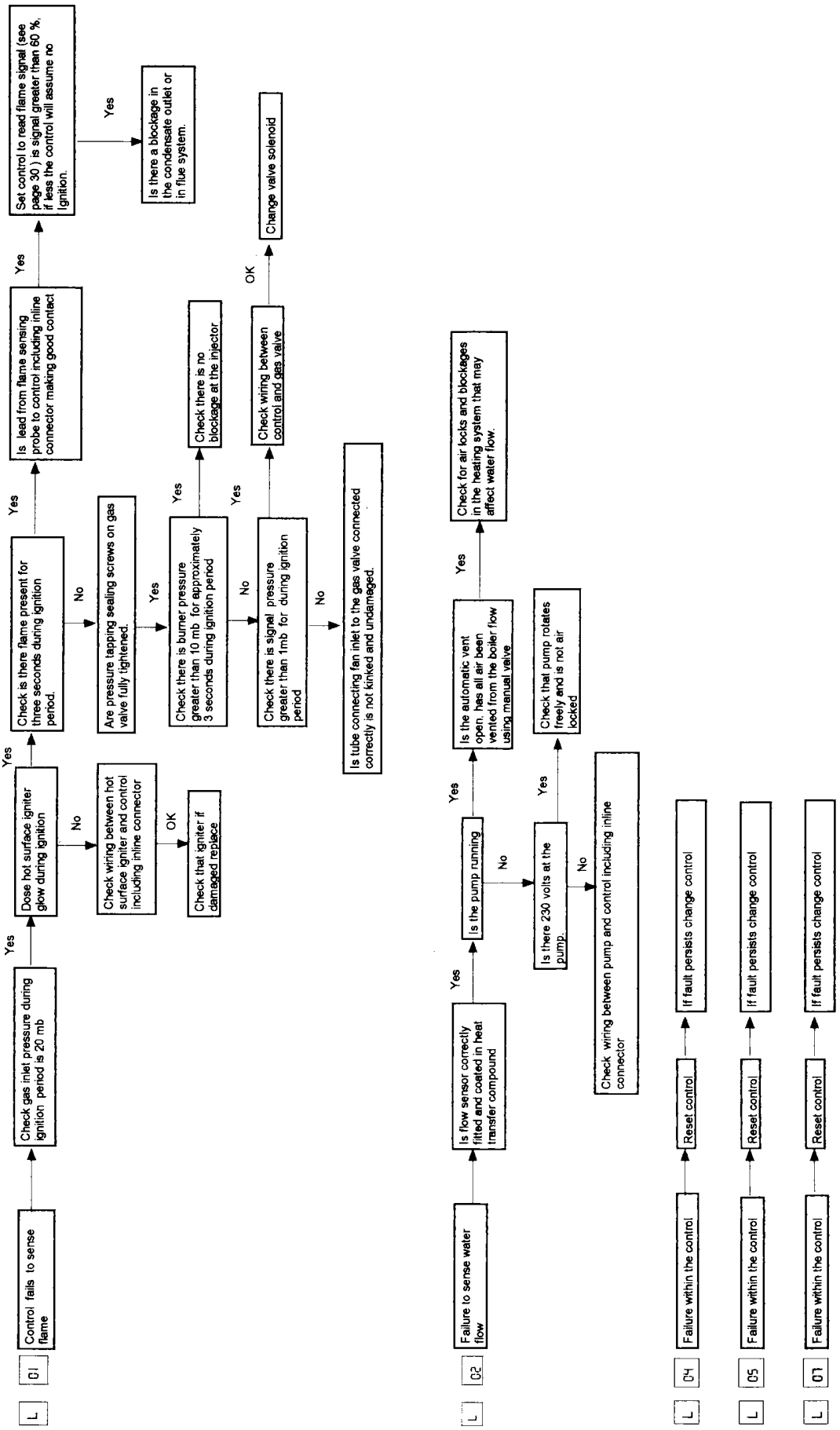
L 01
Control fails to sense flame
Check gas inlet pressure during ignition period is 20 mb
Yes
Dose hot surface igniter glow during ignition
Yes
Check wiring between hot surface igniter and control including inline connector
No
Check that igniter if damaged replace
OK
Check is there flame present for three seconds during ignition period.
No
Are pressure tapping sealing screws on gas valve fully tightened.
Yes
Check there is burner pressure greater than 10 mb for approximately 3 seconds during ignition period
Yes
Check there is no blockage at the injector
No
Check there is signal pressure greater than 1mb for during ignition period
Yes
Check wiring between control and gas valve
OK
Change valve solenoid
No
Is tube connecting fan inlet to the gas valve connected correctly is not kinked and undamaged.
Yes
Is lead from flame sensing probe to control including inline connector making good contact
Yes
Set control to read flame signal (see page 30) is signal greater than 60 %, if less the control will assume no ignition.
Yes
Is there a blockage in the condensate outlet or in flue system.
L 02
Failure to sense water flow
Is flow sensor correctly fitted and coated in heat transfer compound
Yes
Is the pump running
Yes
Is the automatic vent open, has all air been vented from the boiler flow using manual valve
Yes
Check for air locks and blockages in the heating system that may affect water flow.
No
Is there 230 volts at the pump.
Yes
Check that pump rotates freely and is not air locked
No
Check wiring between pump and control including inline connector
L 04
Failure within the control
Reset control
If fault persists change control
L 05
Failure within the control
Reset control
If fault persists change control
L 07
Failure within the control
Reset control
If fault persists change control

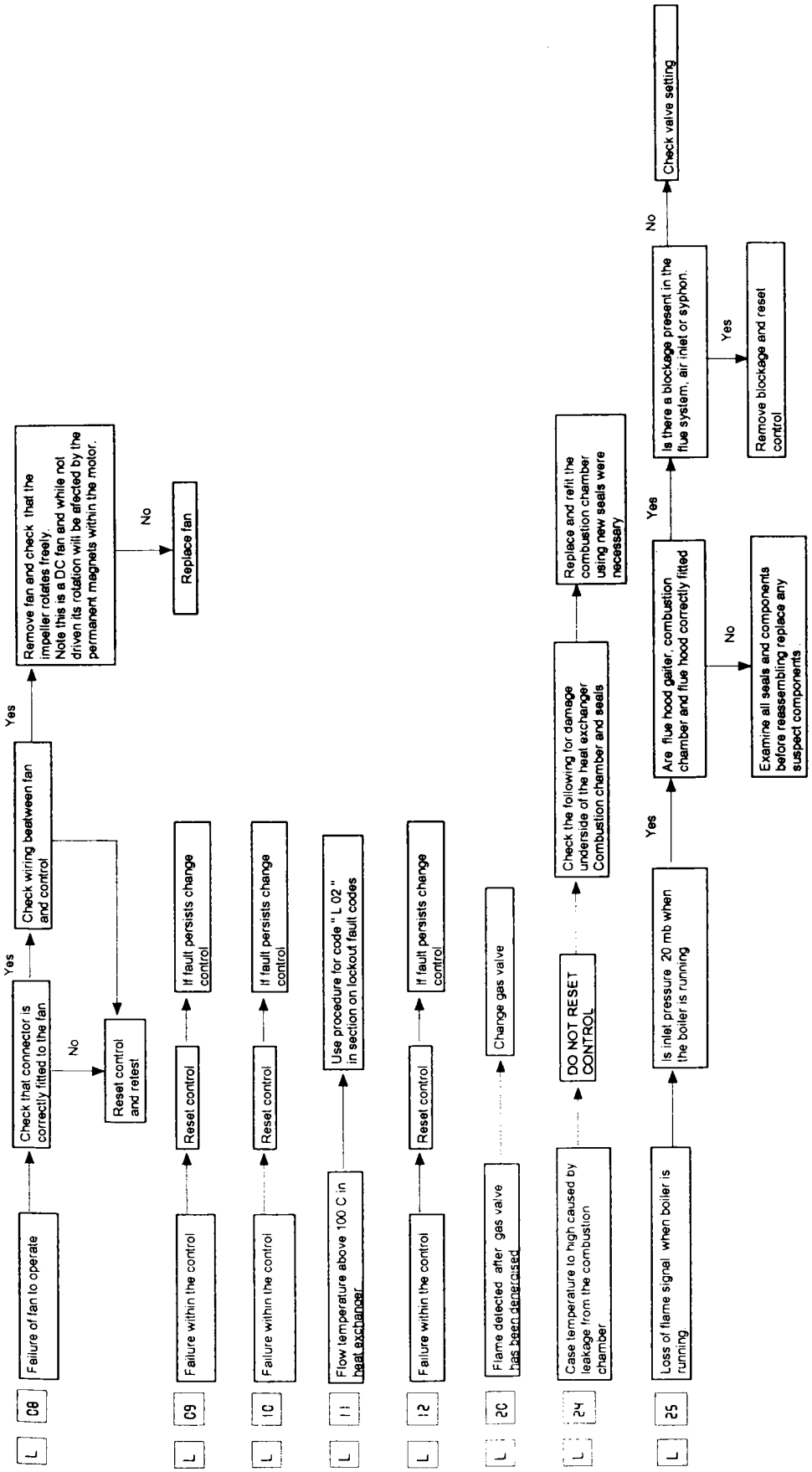
L 08
Failure of fan to operate
Check that connector is correctly fitted to the fan
No
Reset control and retest
Yes
Check wiring beatween fan and control
Yes
Remove fan and check that the impeller rotates freely. Note this is a DC fan and while not driven its rotation will be afected by the permanent magnets within the motor.
No
Replace fan
L 09
Failure within the control
Reset control
If fault persists change control
L 10
Failure within the control
Reset control
If fault persists change control
L 11
Flow temperature above 100 C in heat exchanger
Use procedure for code " L 02 " in section on lockout fault codes
L 12
Failure within the control
Reset control
If fault persists change control
L 20
Flame detected after gas valve has been deenergised
Change gas valve
L 24
Case temperature to high caused by leakage from the combustion chamber
DO NOT RESET CONTROL
Check the following for damage underside of the heat exchanger Combustion chamber and seals
Replace and refit the combustion chamber using new seals were necessary
L 25
Loss of flame signal when boiler is running
Is inlet pressure 20 mb when the boiler is running
Yes
Are flue hood gaiter, combustion chamber and flue hood correctly fitted
No
Examine all seals and components before reassembling replace any suspect components.
Yes
Is there a blockage present in the flue system, air inlet or syphon.
Yes
Remove blockage and reset control
No
Check valve setting

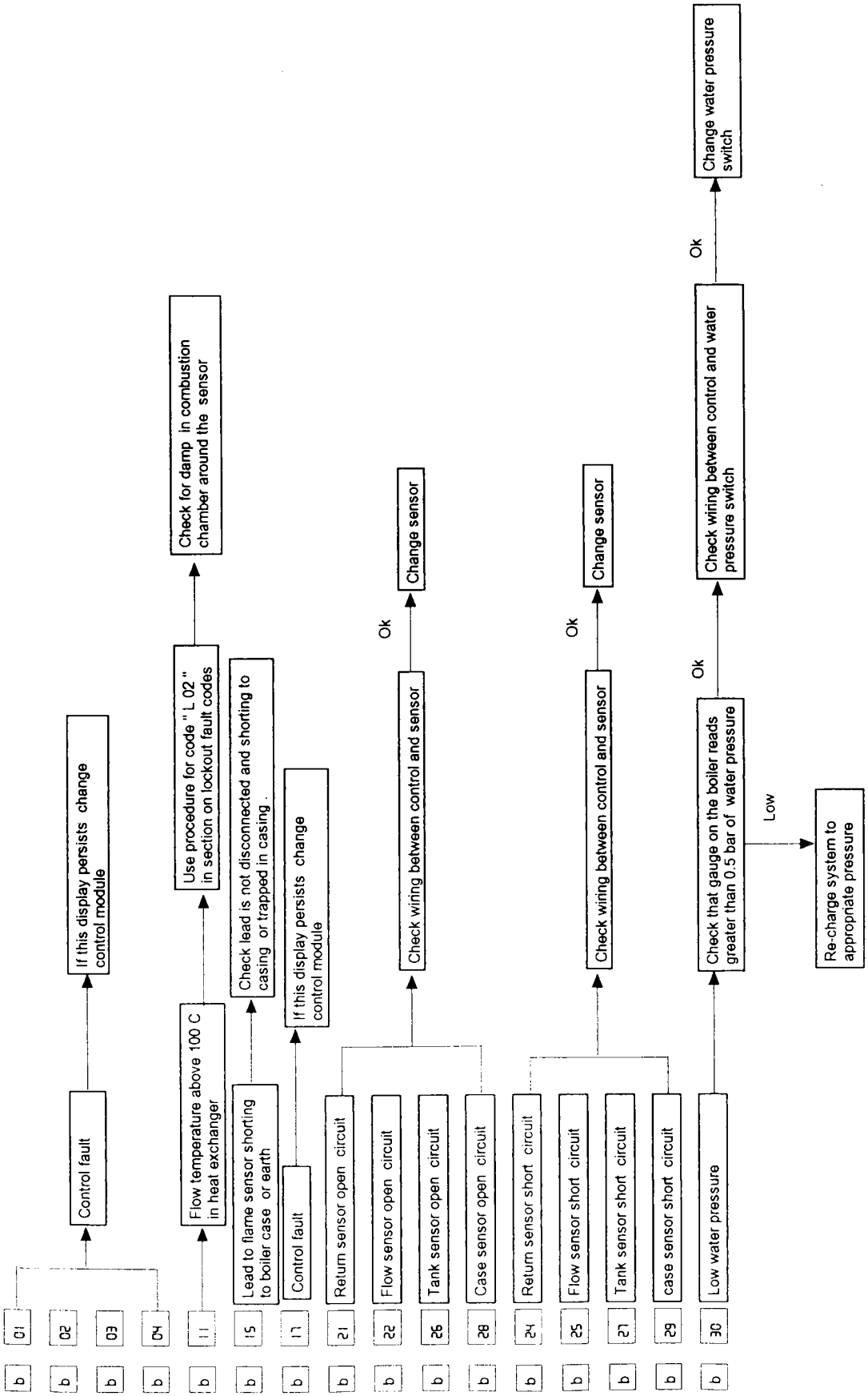
01
02
03
04
Control fault
If this display persists change control module
11
Flow temperature above 100 C in heat exchanger
Use procedure for code " L 02 " in section on lockout fault codes
Check for damp in combustion chamber around the sensor
15
Lead to flame sensor shorting to boiler case or earth
Check lead is not disconnected and shorting to casing or trapped in casing .
17
Control fault
If this display persists change control module
21
Return sensor open circuit
22
Flow sensor open circuit
26
Tank sensor open circuit
28
Case sensor open circuit
Check wiring between control and sensor
Ok
Change sensor
24
Return sensor short circuit
25
Flow sensor short circuit
27
Tank sensor short circuit
29
case sensor short circuit
Check wiring between control and sensor
Ok
Change sensor
30
Low water pressure
Check that gauge on the boiler reads greater than 0.5 bar of water pressure
Ok
Check wiring between control and water pressure switch
Ok
Change water pressure switch
Low
Re-charge system to appropriate pressure

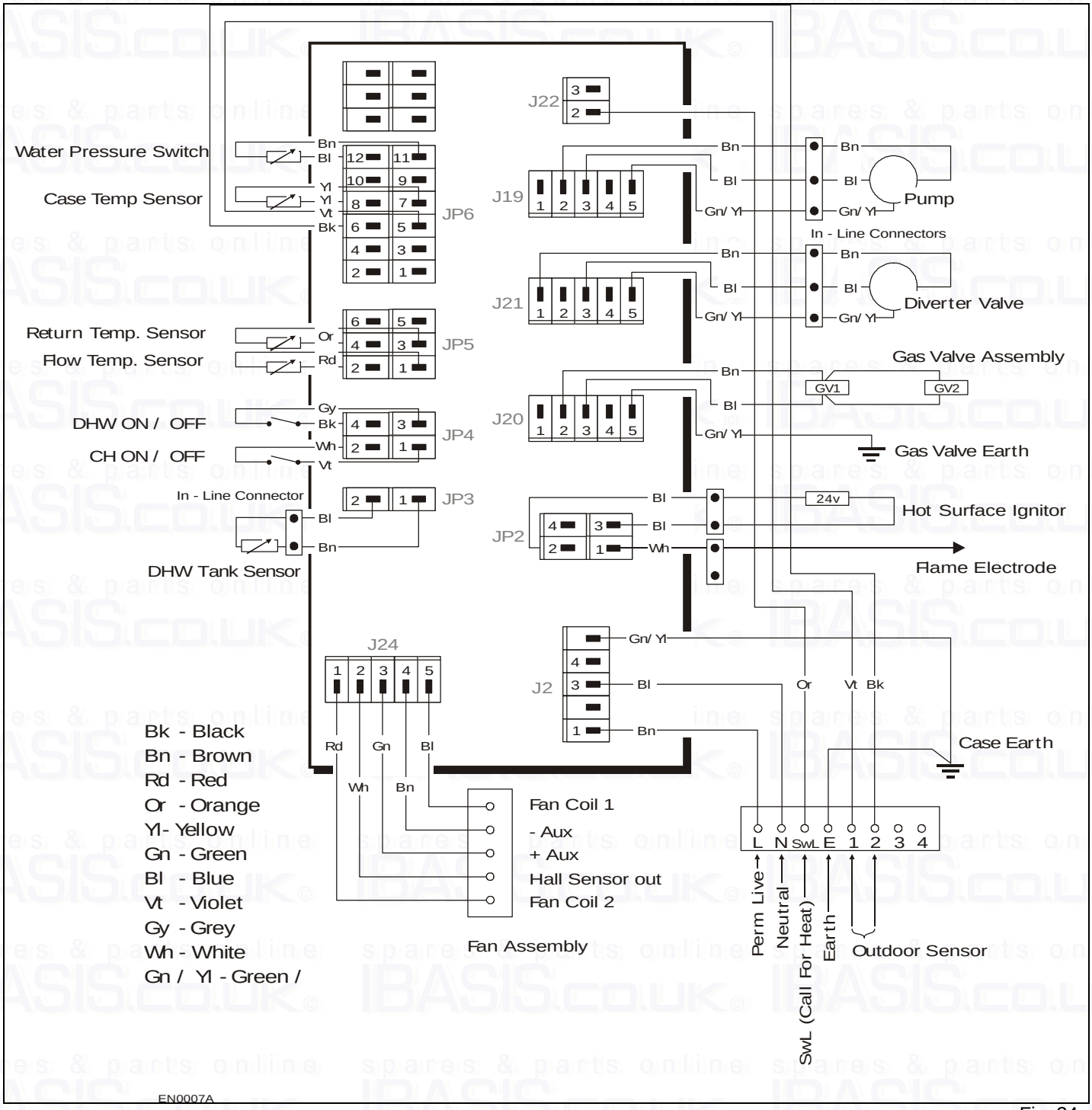
Water Pressure Switch
Case Temp Sensor
Return Temp. Sensor
Flow Temp. Sensor
DHW ON / OFF
CH ON / OFF
In - Line Connector
DHW Tank Sensor
JP6
JP5
JP4
JP3
J22
J19
J21
J20
JP2
J24
J2
Pump
In - Line Connectors
Diverter Valve
Gas Valve Assembly
GV1
GV2
Gas Valve Earth
24v
Hot Surface Ignitor
Flame Electrode
Case Earth
Fan Coil 1
- Aux
+ Aux
Hall Sensor out
Fan Coil 2
Fan Assembly
L N SwL E 1 2 3 4
Perm Live
Neutral
SwL (Call For Heat)
Earth
Outdoor Sensor
Bk - Black
Bn - Brown
Rd - Red
Or - Orange
Yl- Yellow
Gn - Green
Bl - Blue
Vt - Violet
Gy - Grey
Wh - White
Gn / Yl - Green /
EN0007A

Fig. 24

8. Boiler Wiring Layout – Page 36

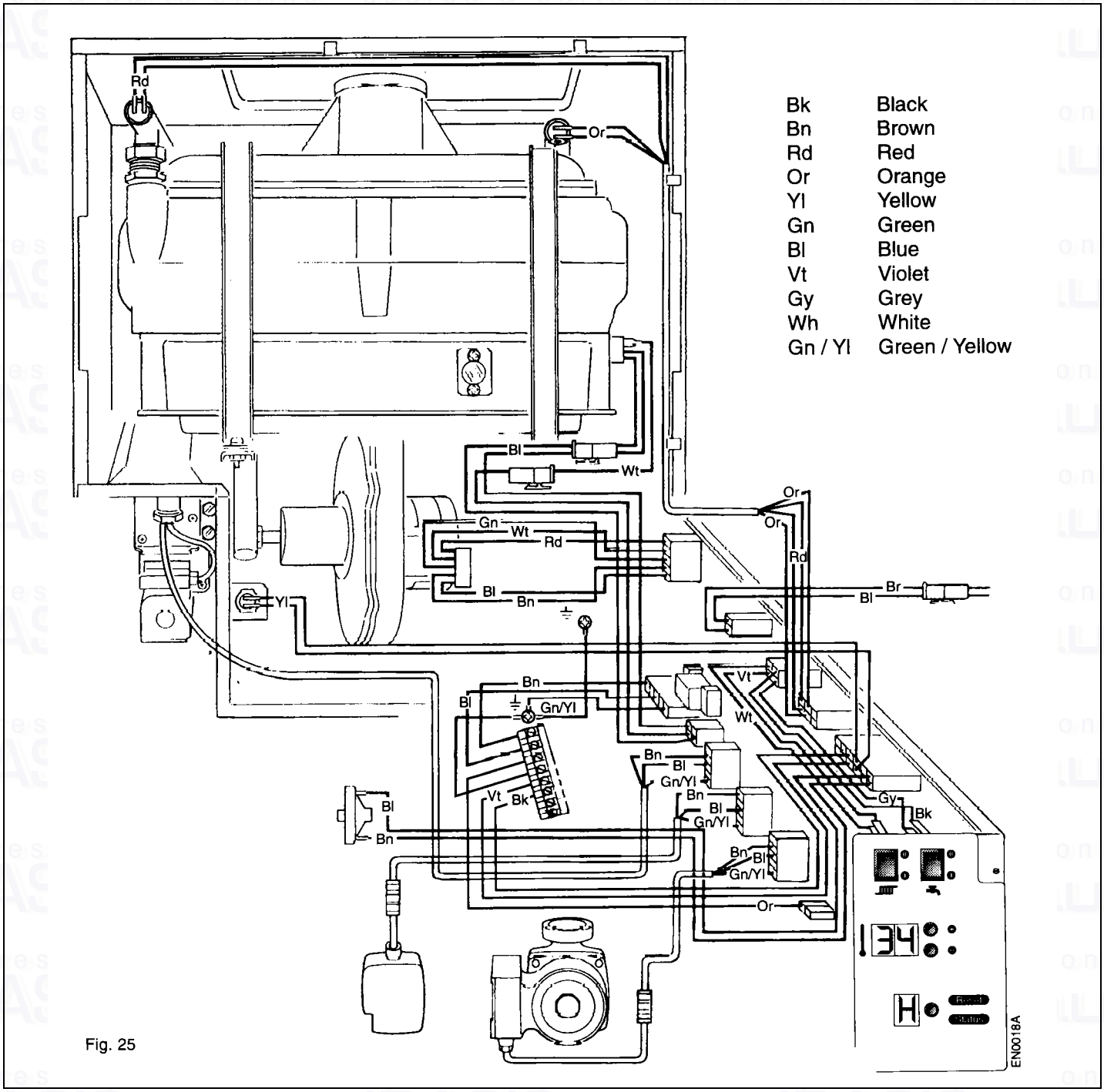

Fig. 25

9. Short List Of Spare Parts – Page 37

Drg. Ref.	Description	Potterton Part No.	G.C. No.
1	Gas Valve Assembly	402992	
2	Injector	411010	
3	Fan	409585	
4	Control Assembly	407751	
5	Temperature Sensor	404513	
6	Burner	414732	
7	Burner Gasket	236120	
8	Fan Outlet Gasket	236253	
9	Hot Surface Igniter	407728	
10	Flame Sensor	407729	
11	Combustion Chamber ‘O’ Ring Seal	236123	
12	Flue Hood ‘O’ Ring Seal	236122	
13	Flue Scraper	907736	
14	Fuse T3, 15A	933005	
15	Pump	411153	
16	Diverter Valve	430065	
17	Diverter Valve Head		
18	Pressure Gauge	430101	
19	Pressure Relief Valve	430044	
20	Water Pressure Switch	642215	
21	Expansion Vessel	430052	
22	Gaiter	236139	

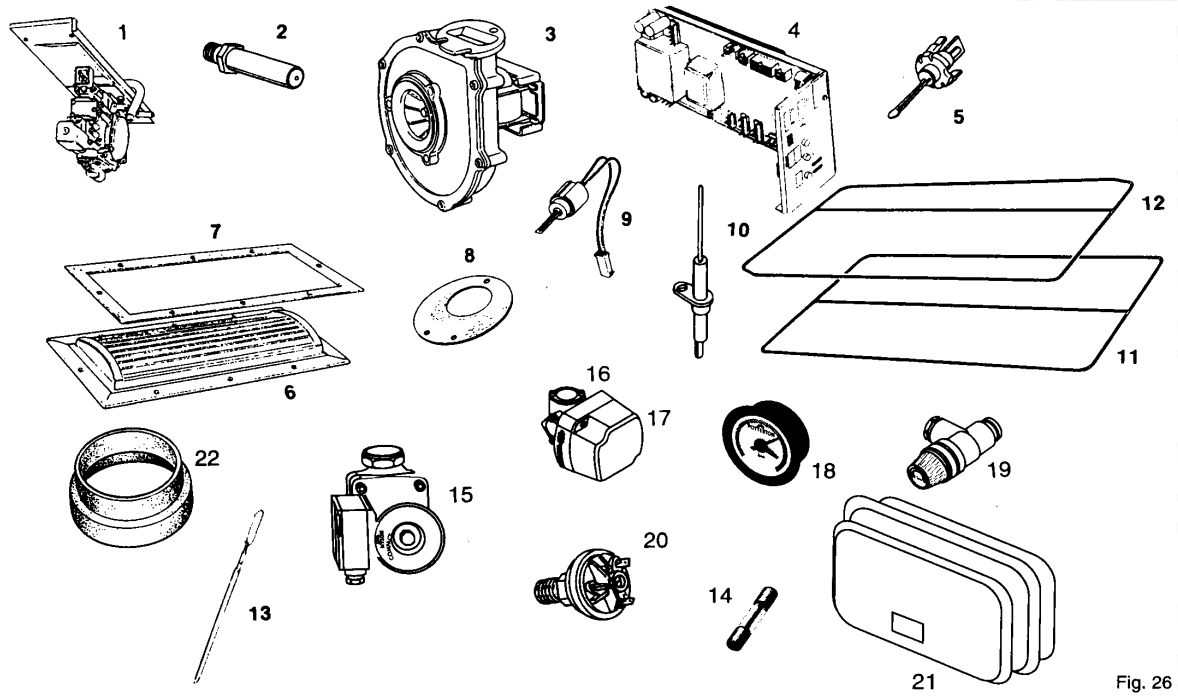

Fig 26

Burner pressure checking and adjustment procedure.

This appliance is fitted with a Gas/Air ratio control mixing valve. This gas valve ensures that the correct amount of gas is delivered to the burner to match the available air supply under all operating conditions. The burner pressure and gas rate have been precisely set and checked during manufacture and it is extremely unlikely that any further adjustment will be necessary.

To check the correct operation of the gas valve follow the instructions below carefully.

a. A good indication of correct operation of the boiler will be obtained by measuring the gas rate at the gas meter.

   1. Run the appliance for at least 10 minutes. Ensure that the boiler is not modulating by operating in DHW mode with a hot water tap fully open.

   2. With all other gas appliances turned off measure the gas rate at the meter for a period of at least 5 minutes. Check that the measured rate is within ± 5% of the rate stated on the data plate.

b. To measure the burner pressure.

   1. Turn off the gas service cock. Fit a pressure gauge to the gas inlet pressure test point on the gas control valve. Connect a differential pressure gauge or 'U' tube manometer between the burner pressure test point (high pressure side) and the reference pressure test point (low pressure side) on the gas valve (See Fig. 24).

   2. Turn on the gas service cock and run the appliance for at least 10 minutes. Check that the gas inlet pressure is between 19-20 mbar.

   3. Check that the differential burner pressure is within ± 1.0 mbar of that stated on the data plate.

   4. Turn off the gas service cock and remove the pressure gauge and replace the pressure test point sealing screws on the gas valve.

A burner pressure reading outside the specified range does not necessarily indicate a wrongly adjusted gas valve. Other factors i.e. insufficient air flow will cause the gas valve to automatically adjust the burner pressure to maintain safe combustion. Before attempting to adjust the gas valve a check must be conducted on the whole appliance to ensure that any other faults present are found and rectified.

Setting the Burner Pressure

WARNING

Setting the burner pressures on a modulating gas/air control valve is a complex procedure and should only be attempted by a competent person. Incorrect adjustment will impede the performance of the boiler and may result in **HAZARDOUS COMBUSTION**. Setting the burner pressure requires the following equipment.

Essential

1. A differential pressure gauge or 'U' tube manometer capable of measuring pressures in the range 0-25 mbar (0-10 'H2O) with a resolution of 0.1 mbar (0.05 'H2O).
2. A differential pressure gauge capable of measuring pressures in the range of 0-2.50 mbar (0-1.00 'H2O) with a resolution of 0.01 mbar (0.005 'H2O).
3. Sufficient flexible tube and 'T' piece connector to enable these instruments to be connected to the gas valve in the arrangement shown in Fig. 24.
4. A CO2 analyser capable of measuring CO2 concentrations in the range 0 - 15% with a resolution of 0.1%.

Setting Procedure

1. Remove sealing screws and connect the two differential pressure gauges to the gas valve as shown in Fig. 24 and remove the adjustment screw sealing cap.
2. Run the appliance for at least 10 minutes. Ensure that the boiler is not modulating by operating in DHW mode with a hot water tap fully open.
3. Enter the INSTALLER MODE on the control board and set the MAXIMUM fan speed G to 40. This will force the fan to run at minimum modulation.
4. Note the gas valve signal pressure (differential pressure gauge 2) and burner pressure (differential pressure gauge 1) Check that both pressures are within the minimum modulation operating range shown (page 39). If the burner setting pressure is outside the range reset to the pressure indicated on the SETTING LINE corresponding to the measured gas valve signal pressure. If the gas valve signal is outside the range contact the Potterton Service Department.
5. Enter the INSTALLER MODE on the control board and set the MINIMUM fan speed G to 99. This will force the fan to run at maximum modulation.
6. Note the gas valve signal pressure (differential pressure gauge 2) and burner pressure (differential pressure gauge 1) Check that both pressures are within the range shown (page 39). If the pressures are outside

the range the valve requires further adjustment, repeat steps 3 to 5. DO NOT ADJUST THE GAS VALVE AT MAXIMUM MODULATION. If the pressures are still outside the range contact the Potterton Service Department.

7. Remove the functional case door and connect the CO2 analyser to the sampling point on the flue hood. Note the maximum modulation CO2 concentration. Enter INSTALLER MODE on the control board and set the MINIMUM fan speed J to 40. Note the minimum modulation CO2 concentration. Check that the CO2 concentrations are within the limits shown below and that they reduce by 0.1 to 0.5% from maximum to minimum modulation, re-adjust the gas valve if necessary. If after adjustment the CO2 concentrations are outside these limits contact the Potterton Service Department.

   Boiler CO2 - 8.3% ± 0.3%

8. Remove the CO2 analyser and replace the functional case door. Enter the INSTALLER MODE on the control board and return the MAXIMUM fan speed G to 99 and the MINIMUM fan speed J to 40.

   If a new burner or fan has been fitted it may be necessary to adjust the fan speed offset to achieve the correct gas valve signal pressure. This is accessible by carrying out the following procedure.

   Press the Reset/Function Button until a flashing 'C' is shown in the Status Display. Hold in the button until the 'C' changes to 'H' (control now in Installer Mode), release the button and then index through the menu by pressing the Reset/Function Button and releasing to move to the next feature until a flashing 'F' is seen in the Status Display. At this time a number between 0 & 6 will be seen in the Flow Temperature & Settings Display. The display setting is '3', it is possible to adjust the display to this figure by pressing the + / - buttons until the desired setting is attained. Press the Reset/Function button twice and the control display will return to user mode and store the change in settings.

Fig. 27 & Fig 28

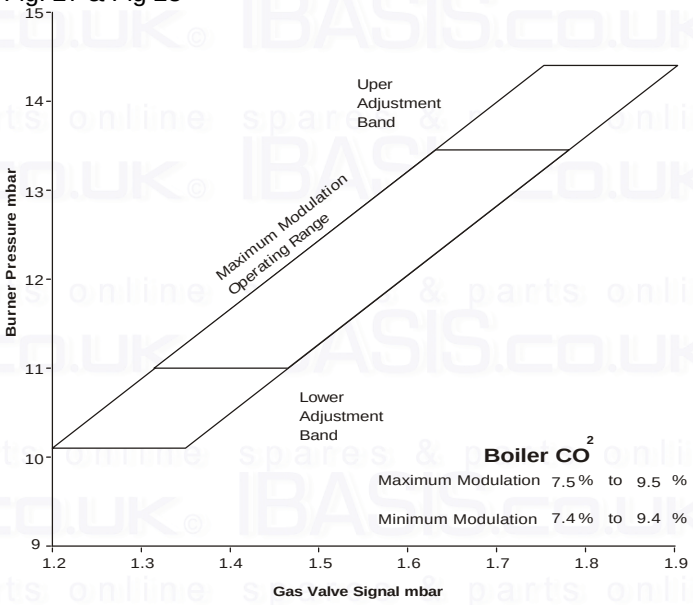

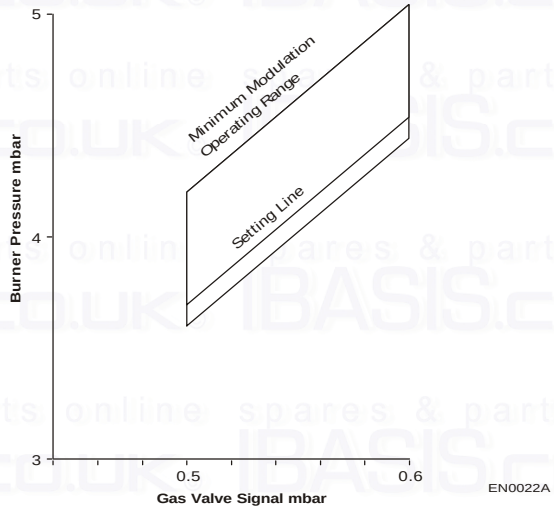

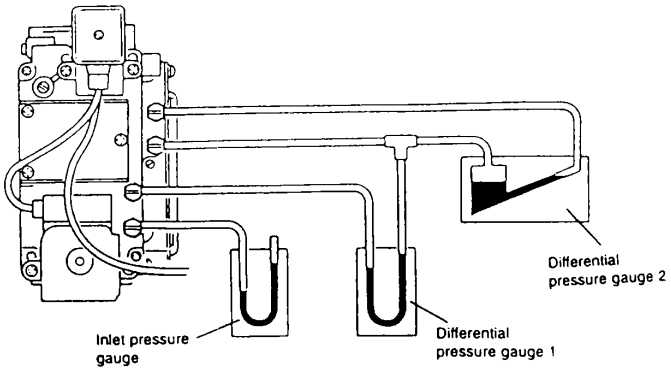

Fig. 28

Back Page